afroozpharma@yahoo.com

2017

USP 40 THE UNITED STATES PHARMACOPEIA

NF 35 THE NATIONAL FORMULARY

Volume 1-1

By authority of the United States Pharmacopeial Convention
Prepared by the Council of Experts and its Expert Committees

Official from May 1, 2017

The designation on the cover of this publication, "USP NF 2017," is for ease of identification only. The publication contains two separate compendia: *The United States Pharmacopeia*, Fortieth Revision, and *The National Formulary*, Thirty-Fifth Edition.

THE UNITED STATES PHARMACOPEIAL CONVENTION
12601 Twinbrook Parkway, Rockville, MD 20852

afroozpharma@yahoo.com

SIX-MONTH IMPLEMENTATION GUIDELINE

The *United States Pharmacopeia–National Formulary* and its supplements become official **six months** after being released to the public. The *USP–NF*, which is released on November 1 of each year, becomes official on May 1 of the following year. This six-month implementation timing gives users more time to bring their methods and procedures into compliance with new and revised *USP–NF* requirements.

The table below describes the official dates of the *USP–NF* and its supplements. The 2016 *USP 39–NF 34*, and its supplements, *Interim Revision Announcements (IRAs)* and *Revision Bulletins* to that edition, will be official until May 1, 2017, at which time the *USP 40–NF 35* becomes official.

Publication	Release Date	Official Date	Official Until
USP 40–NF 35	November 1, 2016	May 1, 2017	May 1, 2018 (except as superseded by supplements, *IRAs*, and *Revision Bulletins*)
First Supplement to the USP 40–NF 35	February 1, 2017	August 1, 2017	May 1, 2018 (except as superseded by *Second Supplement*, *IRAs*, and *Revision Bulletins*)
Second Supplement to the USP 40–NF 35	June 1, 2017	December 1, 2017	May 1, 2018 (except as superseded by *IRAs* and *Revision Bulletins*)
USP 41–NF 36	November 1, 2017	May 1, 2018	May 1, 2019 (except as superseded by supplements, *IRAs*, and *Revision Bulletins*)

The table below gives the details of the *IRAs* that will apply to *USP 40–NF 35*.

IRA	PF Posting Date	Comment Due Date	IRA Posting Date	IRA Official Date
42(1)	January 4, 2017	March 31, 2017	May 27, 2017	July 1, 2017
42(2)	March 1, 2017	May 31, 2017	July 29, 2017	September 1, 2017
42(3)	May 2, 2017	July 31, 2017	September 30, 2017	November 1, 2017
42(4)	July 1, 2017	September 30, 2017	November 25, 2017	January 1, 2018
42(5)	September 1, 2017	November 30, 2017	January 27, 2018	March 1, 2018
42(6)	November 1, 2017	January 31, 2018	March 31, 2018	May 1, 2018

Revision Bulletins published on the USP website become official on the date specified in the *Revision Bulletin.*

NOTICE AND WARNING

Concerning U.S. Patent or Trademark Rights—The inclusion in *The United States Pharmacopeia* or in the *National Formulary* of a monograph on any drug in respect to which patent or trademark rights may exist shall not be deemed, and is not intended as, a grant of, or authority to exercise, any right or privilege protected by such patent or trademark. All such rights and privileges are vested in the patent or trademark owner, and no other person may exercise the same without express permission, authority, or license secured from such patent or trademark owner.

Concerning Use of USP *or* NF *Text*—Attention is called to the fact that *USP* and *NF* text is fully copyrighted. Authors and others wishing to use portions of the text should request permission to do so from the Secretary of the USPC Board of Trustees.

Copyright © 2016 The United States Pharmacopeial Convention
12601 Twinbrook Parkway, Rockville, MD 20852

All rights reserved.
ISSN: 0195-7996

ISBN: 978-1-936424-60-3

Printed in the United States by United Book Press, Inc., Baltimore, MD

afroozpharma@yahoo.com

Contents

VOLUME 1

Mission Statement and Preface vii

People 2015–2020 Revision Cycle xi
- Officers xi
- Board of Trustees xi
- Council of Experts xi
- Expert Committees xii
- In Memoriam xviii

Members of the United States Pharmacopeial Convention, as of May 31, 2016 xix

2015 Recognition of Monograph and Reference Material Donors . . . xxvi

Articles of Incorporation xxviii

USP Governance xxix
- Bylaws xxix
- Rules and Procedures xxix
- USP Policies xxix

Admissions xxxiii
- Articles Admitted to *USP 40* by Supplement xxxiii
- New Articles Appearing in *USP 40* That Were Not Included in *USP 39* Including Supplements xxxiv
- Articles Included in *USP 39* But Not Included in *USP 40* xxxv
- Annotated List xxxvi

Notices
- General Notices and Requirements 1

General Chapters

See page 63 for detailed contents
- General Tests and Assays 67
- General Requirements for Tests and Assays 67
- Apparatus for Tests and Assays 107
- Microbiological Tests 111
- Biological Tests and Assays 143
- Chemical Tests and Assays 245
- Physical Tests and Determinations 472
- General Information 829
- Dietary Supplements 2245

Reagents, Indicators, and Solutions 2323
- Reagent Specifications 2324
- Indicators and Indicator Test Papers 2406
- Solutions 2409
  - Buffer Solutions 2409
  - Colorimetric Solutions 2411
  - Test Solutions 2411
  - Volumetric Solutions 2423
- Chromatographic Columns 2436

afroozpharma@yahoo.com

Reference Tables

Containers for Dispensing Capsules and Tablets 2443

Description and Relative Solubility of *USP* and *NF* Articles 2453

Approximate Solubilities of *USP* and *NF* Articles 2513

Atomic Weights 2521

Atomic Masses 2522

Alcoholometric Table 2523

Intrinsic Viscosity Table 2525

Index

Combined Index to *USP 40* and *NF 35* I-1

VOLUME 2

Guide to General Chapters vii

Notices

General Notices and Requirements xi

USP 40

Monographs

Official Monographs for *USP 40,* A–I 2527

Index

Combined Index to *USP 40* and *NF 35* I-1

VOLUME 3

Guide to General Chapters vii

Notices

General Notices and Requirements xi

USP 40

Monographs

Official Monographs for *USP 40,* J–Z 4741

Index

Combined Index to *USP 40* and *NF 35* I-1

VOLUME 4

Guide to General Chapters vii

Notices

General Notices and Requirements xi

Global Health

Official Monographs 6779

Dietary Supplements

Official Monographs 6781

afroozpharma@yahoo.com

NF 35

Admissions

Articles Admitted to *NF 35* by Supplement . . 7483

New Articles Appearing in *NF 35* That Were Not Included in *NF 34* Including Supplements 7483

New Articles Appearing in *NF 35* 7483

Annotated List 7484

Excipients

USP and *NF* Excipients, Listed by Category 7485

Monographs

Official Monographs for *NF 35* 7495

Combined Index to *USP 40* and *NF 35* I-1

afroozpharma@yahoo.com

afroozpharma@yahoo.com

Mission and Preface *USP 40–NF 35* and *Supplements*

This section provides background information on the United States Pharmacopeial Convention (USP), as well as general information about the 40th revision of the *United States Pharmacopeia* (*USP 40*) and the 35th edition of the *National Formulary* (*NF 35*) and their *Supplements*. Unless otherwise noted, the text in *USP 40–NF 35* is official May 1, 2017, the text in the *First Supplement* to *USP 40–NF 35* is official August 1, 2017, and the text in the *Second Supplement* to *USP 40–NF 35* is official December 1, 2017.

MISSION STATEMENT

USP–NF is published in continuing pursuit of the mission of USP: *To improve global health through public standards and related programs that help ensure the quality, safety, and benefit of medicines and foods.*

HISTORY

USP has a rich history, dating back to 1820, when 11 physicians met in the Senate Chamber of the U.S. Capitol building to establish a pharmacopeia for the United States. Learn more about USP's history and major milestones on the USP website (http://www.usp.org/about-usp/our-history).

CONTENT OF *USP–NF*

USP–NF contains official substance (ingredient) and product monographs for official articles recognized in *USP–NF* (see *General Notices 2.20 Official Articles*). *USP–NF* also includes monographs for compounded preparations. With few exceptions, such as articles covered by *Global Health* monographs, all articles for which monographs are provided in *USP–NF* are legally marketed in the United States or are contained in legally marketed articles. *Global Health* monographs are provided for articles that are not approved or legally marketed in the United States, but that have been approved by a stringent regulatory authority [as defined by the World Health Organization (WHO)] and are used for essential purposes in other parts of the world.

A *USP–NF* monograph for an official substance, product, or preparation may consist of various components, including the article's name; definition; packaging, storage, and other requirements; and a specification. General chapters provide frequently cited procedures, sometimes with acceptance criteria, in order to compile into one location repetitive information that is applicable to many monographs. See *General Notices 3.10 Applicability of Standards* for more information about standards contained in *USP–NF* monographs and general chapters.

New and revised monographs and general chapters and omitted monographs from this edition are indicated in the *Admissions* section.

***USP–NF* Organization**—The *USP–NF* is published online as the *USP–NF Online*. *USP–NF* is also printed as a four-volume set. *Volume 1* includes front matter (*Mission and Preface, People*, governance pages and websites, and *Admissions/Annotations*). It also includes *USP General Notices, General Chapters, Dietary Supplements* general chapters, *Reagents*, and *Reference Tables*. *Volume 2* includes *USP* monographs A–I, and *Volume 3* includes *USP* monographs J–Z. *Volume 4* includes *Global Health* monographs, *Dietary Supplements* monographs, *NF Admissions/Annotations, Excipients*, and *NF* monographs. To facilitate convenient use and reference, all four volumes include the combined index, as well as the *USP General Notices* and the *Guide to General Chapters*. General chapters specific to dietary supplements are included in numerical order with the rest of the general chapters in *USP*. Excipient monographs are usually presented in *NF* but also may appear in *USP* with suitable cross-referencing when they are also drug substances. The *Excipients* section (*Volume 4*) presents a tabulation of excipients by functional category.

Supplements—*Supplements* to *USP–NF* follow a standard schedule each year: the *First Supplement* is published in February and becomes official August 1. The *Second Supplement* is published in June and becomes official December 1. Users of USP print products must retain *Supplements* and check the "Official Text" section of USP's website to have up-to-date official text. The *USP–NF Online* is updated with each *Supplement* or annual revision. Each time a new edition or *Supplement* is released during the subscription period, a new electronic version is issued. The *Index* in each *Supplement* is cumulative and includes citations to the annual revision and, for the *Second Supplement*, citations to the *First Supplement*. The contents of the two *Supplements* are integrated into the annual edition of the following year, along with new official revisions that have been adopted since the *Second Supplement* to the previous compendia.

Revisions to *USP–NF*—*USP–NF* is continuously revised by an exceptional process of public involvement and substantial interaction between USP and its stakeholders, both domestically and internationally. Revisions are presented annually in the *USP–NF* and in twice-yearly *Supplements*, and as *Accelerated Revisions* on USP's website [*Errata, Interim Revision Announcements* (*IRAs*), and *Revision Bulletins*].

Standard Revisions—USP's standard revision process calls for publication of a proposed revision in the *Pharmacopeial Forum (PF)* for a 90-day notice and comment period and, after the revision is approved by the relevant USP Expert Committee, publication in the next *USP–NF* or *Supplement*, as applicable. Learn more about the development and revision process on the USP website (http://www.usp.org/usp-nf/development-process).

Accelerated Revisions—The *Accelerated Revision* process is used to make revisions to *USP–NF* official more quickly than through USP's *Standard Revision* process. Learn more about *Revision Bulletins, Interim Revision Announcements (IRA), Errata*, and the criteria for and implementation of each on the USP website (http://www.usp.org/usp-nf/official-text).

Modification of Compendial References—USP and its Expert Committees periodically deem it necessary to modify general chapter titles or similar text that may be referenced in other standards throughout the *USP–NF*. When this oc-

afroozpharma@yahoo.com

curs, USP staff undertake a rigorous process for identifying and updating such references. These updates may occur through a routine revision, or, in cases in which an update appears to present no significant change in the affected standard, through a direct update of the reference in that standard without providing an opportunity for notice and comment. In all cases, USP will publish on its website a notice indicating the source change, any resulting references, and whether those references will be updated through a routine revision or a direct update.

Updating Chemical Information—Updates to the Chemical Information section at the beginning of monographs occur on an ongoing basis and are not identified with revision symbols. Chemical names and molecular weights are updated when a monograph undergoes revision to match the official source, *United States Adopted Names* (*USAN*). Chemical structures are updated on a continuous basis.

Chemical names typically reflect the naming conventions at the time of the monograph development or revision. If the nomenclature rules of CAS or IUPAC are significantly changed, the chemical names can be revised or added to implement those rules. Molecular weights are derived from the chemical formula and are based on the table of atomic weights. Atomic weights are recommended by the IUPAC and reflect the isotopic composition of normal terrestrial material. When the IUPAC recommended values are changed, it is understood that the changes in molecular weights will be made in due course.

Graphical representation of the chemical compound structures is intended as a visual aid to help establish chemical identity and is understood to represent one of many possible ways to depict the molecule. Addition of a graphical representation or changes in such representation, that result in the same chemical information, e.g., a flipped chiral molecule or adding a molecule structure, may be introduced outside of the revision process. It is also understood that in the case of tautomerism, the molecule depicted may be one of the tautomers, but it is intended to represent all isomers in equilibrium. Stereogenic centers depicted with plain bonds imply mixtures of pertinent stereomers—enantiomer, diastereomers, epimers (anomers), etc.

Depending on the timing of these updates, users may see a difference in a chemical structure between the publications in *PF* and *USP–NF*, and between the *USP–NF* and The *USP–NF Online*.

Shading and Symbols—Shading is used to identify text that has been modified, added, or deleted since it was last published. Symbols identify the beginning and end of each revision or nonharmonized text. The following table summarizes the types of symbols and the associated subscripts used in USP publications:

Revision Type	Symbol	Subscript
Interim Revision Announcement	●new text● (IRA 1-Jul-2017)	(IRA 1-Jul-2017)*
Revision Bulletin	●new text● (RB 1-Jan-2017)	(RB 1-Jan-2017)*
Text deletion	●● (IRA 1-Jul-2017) or	(IRA 1-Jul-2017)*
	■■1S (USP40) or	1S (USP40)*
	▲▲ (USP40)	USP40**
Adopted in *Supplement*	■new text■1S (USP40)	1S or 2S (USP annual edition)*
Adopted in *USP–NF*	▲new text▲ (USP40)	USP annual edition**
Harmonization	◆residual national text or nonharmonized text◆	
Errata	●new text● (ERR 1-Jul-2017)	(ERR 1-Jul-2017)
Chapter references	●new text● (CN 1-May-2017)	(CN 1-May-2017)
	●new text● (Official 1-Dec-2017)	(Official 1-Dec-2017)

* A subscript number or date indicates the *IRA*, *Revision Bulletin*, or *Supplement* in which the revision first appeared.

** An example of a revision that was officially adopted in the *USP–NF* would be ▲USP40.

The following table shows symbols and official dates for *IRAs* and *Supplements* to *USP 40–NF 35*.

IRAs and *Supplements* to *USP 40–NF 35*
Official Dates and Symbols

Supplement	Proposed IRA	Official Date	Symbols
	43(1)	July 1, 2017	●and● (IRA 1-Jul-2017)
1		Aug. 1, 2017	■and■1S (USP40)
	43(2)	Sept. 1, 2017	●and● (IRA 1-Sep-2017)
	43(3)	Nov. 1, 2017	●and● (IRA 1-Nov-2017)
2		Dec. 1, 2017	■and■2S (USP40)
	43(4)	Jan. 1, 2018	●and● (IRA 1-Jan-2018)
	43(5)	Mar. 1, 2018	●and● (IRA 1-Mar-2018)
USP 41–NF 36	43(6)	May 1, 2018	●and● (IRA 1-May-2018)

Also, in the *USP–NF Online*, monographs and general chapters that have been revised but not yet published in the *USP–NF* or its *Supplements* (e.g., as *Accelerated Revisions*) will contain icons that will link to the page on the USP website where the new official text can be viewed. These icons will link to *Accelerated Revisions* (*Revision Bulletins*, *Interim Revision Announcements*, and *Errata*) and *Stage 6 Harmonization* (see *Harmonization Activities* below).

Commentary—For revisions that are published for public review and comment in *PF*, the proposal may advance to official status or be republished in *PF* for further notice and comment. If comments are received, they are considered and incorporated as appropriate by the Expert Committee(s). In cases where proposals advance to official status without republication in *PF*, a summary of comments received and the appropriate Expert Committee's responses are published in the *Commentary* section of the USP website at the time the revision is published.

The *Commentary* is not part of the official text and is not intended to be enforceable by regulatory authorities. Rather, it explains the basis of the Expert Committee's response to public comments. If there is a difference between the contents of the *Commentary* and the official text, the official text prevails. In case of a dispute or question of interpretation, the language of the official text, alone and independent of the *Commentary*, shall prevail.

Print and Electronic Presentations—See *General Notices 2.10 Official Text* for more information about *USP–NF* product formats.

USP–NF Translations—Translations of the *USP–NF* are available in Spanish, Russian, and Chinese. The Spanish translation is current; other translations are based on previous revisions of the *USP–NF*.

USP Reference Standards—The use of USP Reference Standards promotes uniform quality of drugs and supports reliability and consistency by those performing compliance testing and other users of *USP–NF*, including manufacturers, buyers, and regulatory authorities. USP Reference Standards are referenced in specific procedures in both monographs and general chapters. USP advances this material via careful characterization studies and collaborative testing, followed by review and approval of the compendial use of the reference material by Expert Committees of the Council of Experts. The *USP Catalog*, which lists the collection of USP

afroozpharma@yahoo.com

Reference Standards, and more information about use and storage, can be accessed on USP's website (http://www.usp.org/reference-standards). This program benefits from the widespread voluntary contribution of suitable materials and test data from pharmaceutical manufacturers.

USP GOVERNING, STANDARDS-SETTING, AND ADVISORY BODIES

USP's governing, standards-setting, and advisory bodies include the USP Convention, the Board of Trustees, the Council of Experts and its Expert Committees, Expert Panels, Subcommittees, Joint Standard-Setting Subcommittees, and staff. Additional volunteer bodies include Stakeholder Forums and Project Teams, which offer stakeholders the opportunity to contribute, through advice and recommendations, to the advancement of USP's standards and processes. Learn about the composition and work of the USP Convention, Board of Trustees, Expert Committees, and Expert Panels on the USP website (http://www.usp.org/about-usp/leadership/governance). Learn more about Stakeholder Forums and Project Teams on the USP website (http://www.usp.org/meetings-courses/stakeholder-forums). A listing of all current Voting Delegates of the USP Convention and members and Government Liaisons to the Council of Experts and its Expert Committees and Expert Panels is included in the *People* section.

Working with the Food and Drug Administration—USP works with the Secretary of the Department of Health and Human Services, and the principal agency in the Department for this work is the Food and Drug Administration (FDA). USP works in many ways with the agency, but the primary interaction is through the Government Liaison Program. The Government Liaison Program allows representatives of FDA and other government agencies to participate in Expert Committee and Expert Panel meetings, enabling interactions between government staff and Expert Committees. Staff in the FDA Centers who are responsible for review of compendial activities provide specific links and opportunities for exchange of comments. The Office of Policy for Pharmaceutical Quality in the Center for Drug Evaluation and Research provides a primary compendial point of contact between FDA and USP.

RULES AND PROCEDURES

Governing Documents—*USP–NF* standards are recognized widely because they are authoritative and science-based and are established by a transparent and credible process. See the *Articles of Incorporation* section in this book; the Bylaws (http://www.usp.org/about-usp/leadership/bylaws), and the *Rules and Procedures of the Council of Experts* (http://www.usp.org/about-usp/leadership/policies-rules). Collectively, these documents serve USP volunteers and staff as the governing principles for USP's standards-setting activities.

LEGAL RECOGNITION

Recognition of *USP–NF*—*USP–NF* is recognized by law and custom in many countries throughout the world. In the United States, the Federal Food, Drug, and Cosmetic Act (FD&C Act) defines the term "official compendium" as the official *USP*, the official *NF*, the official *Homeopathic Pharmacopeia of the United States*, or any supplement to them. *USP–NF* standards play a role in the adulteration and misbranding provisions of the FD&C Act, which apply as well to biologics, a subset of drugs, under the Public Health Service Act (see *General Notices 2.30 Legal Recognition*).

FDA requires that names for articles that are not official must be clearly distinguished and differentiated from any name recognized in an official compendium. Drugs with a name recognized in *USP–NF* also will be considered misbranded unless they meet compendial standards for packaging and labeling (see *General Notices 3.10.10 Applicability of Standards to Drug Products, Drug Substances, and Excipients* for more information).

Drugs—USP's goal is to have substance and drug product monographs in *USP–NF* for FDA-approved drugs in the United States, including chemical and biologic medicines, and their ingredients. USP also provides monographs in *USP–NF* for legally marketed therapeutic products not approved by FDA, e.g., pre-1938 drugs, over-the-counter (OTC) drugs marketed under FDA's OTC Monograph system, dietary supplements, and compounded preparations. The *Global Health* section of *USP–NF* contains monographs for articles that are not approved or legally marketed in the United States, but that have been approved by a stringent regulatory authority (as defined by WHO) and are used for essential purposes in other parts of the world. Conformance with a *USP–NF* monograph, if applicable, is required at all times in the life of an article from production to expiration.

Biologics—In the United States, biologics are considered to be a subset of drugs, whether they are approved by FDA under the FD&C Act [and receive a new drug application (NDA)] or under the Public Health Service Act [PHS Act, where they receive a biologics license application (BLA)]. As a result, all PHS Act biologics are subject to the applicable drug regulatory requirements of the FD&C Act, which means they are required to comply with the adulteration and misbranding provisions of the FD&C Act, including *USP–NF* compendial requirements, to the extent that such requirements apply to a particular biologic product. This is equally so for biologics approved under the longstanding PHS Act "351(a)" pathway, as well as the new "351(k)" pathway for biosimilars added by the 2010 healthcare reform legislation (Biologics Price Competition and Innovation Act, Title VII, Subtitle A of the Patient Protection and Affordable Care Act, Public Law 111-148).

Dietary Supplements—The Dietary Supplement Health and Education Act of 1994 amendments to the FD&C Act provide that a dietary supplement may be deemed a misbranded food if it is covered by the specifications of an official compendium (e.g., *USP–NF*), is represented as conforming to the specifications of an official compendium, and fails to so conform. This contrasts with pharmaceutical products, wherein conformance to applicable compendial standards is mandatory, whether or not the product claims to conform.

Compounded Preparations—Compounding means the preparation, mixing, assembling, altering, packaging, and labeling of a drug or device or other article, as the result of a practitioner's order or in anticipation of such an order based on routine, regularly observed prescribing patterns. USP provides both general chapters and monographs for compounded preparations. Learn more about compounding on the USP website (http://www.usp.org/usp-healthcare-professionals/compounding).

Medical Devices—Section 201(h) of the FD&C Act defines a device as an instrument, apparatus, similar article, or component thereof recognized in *USP–NF*. Section 502(e) of the FD&C Act defines the established name of a device in the absence of an FDA designation of the official name as the official title in an official compendium. Despite these statutory provisions, there is no comparable recognition of USP's role in establishing compendial standards for medical devices as exists for drugs and biologics. Under authority granted by the Food and Drug Administration Modernization Act of 1997, the Center for Devices and Radiological Health recognizes national and international standards, including some *USP* tests and assays, for medical devices.

Nomenclature—For information on the nomenclature development process, the Nomenclature and Labeling Expert Committee, and USP's work with United States

afroozpharma@yahoo.com

Adopted Names (USAN), see the USP website (http://www.usp.org/usp-nf/development-process/compendial-nomenclature).

Chemical Names and CAS Registry Numbers—Chemical subtitles given in the monographs are index names used by the Chemical Abstracts Service (CAS) of the American Chemical Society. They are provided only in monographs in which the titles specify substances that are definable chemical entities. The first subtitle is the inverted form of the systematic chemical name developed by CAS for the purpose of the Collective Index (CI). The second subtitle, given in uninverted form, is a preferred IUPAC name (PIN) sanctioned and used by the International Union of Pure and Applied Chemistry (IUPAC). Preferred IUPAC names also are used by the WHO. Occasionally a third subtitle is supplied for historical reasons or when the synonym uses an alternative, but equivalent, naming convention. Monographs with chemical subtitles also generally carry CAS registry numbers. These bracketed numbers function independently of nomenclature as invariant numerical designators of unique, unambiguous chemical substances in the CAS registry, and thus are convenient and widely used.

HARMONIZATION ACTIVITIES

Pharmacopeial Discussion Group—USP harmonizes pharmacopeial excipient monographs and general chapters through the Pharmacopeial Discussion Group (PDG), which includes representatives from the European, Japanese, and United States pharmacopeias, and WHO (as an observer). According to the PDG definition, "a pharmacopeial general chapter or other pharmacopeial document is harmonized when a pharmaceutical substance or product tested by the document's harmonized procedure yields the same results, and the same accept/reject decision is reached." Information regarding PDG, including history, the PDG working procedure, a glossary, and lists of monographs and general chapters that have completed stages 1–6 of the pharmacopeial harmonization process, resulting in an approved USP Stage 6 Harmonization text, is available on USP's website (http://www.usp.org/usp-nf/harmonization).

Other Harmonizing Activities—USP is participating in several harmonizing activities that include all pharmacopeias. These activities, while currently in progress, are working toward Good Pharmacopoeial Practices and optimal public standards for all medicines.

OTHER USP COMPENDIA

USP Compounding Compendium—The *USP Compounding Compendium* is an electronic compendium that includes all compounding-related general chapters from the *USP–NF* as well as the supporting general chapters that are referenced in the compounding general chapters and in *USP–NF General Notices.* The purpose of the *USP Compounding Compendium* is to provide compounding practitioners with convenient access to associated general chapters.

USP Herbal Medicines Compendium—The *USP Herbal Medicines Compendium (HMC)* is an online compendium that will help ensure the quality of the herbal ingredients used in herbal medicines. *HMC* monographs provide quality specifications—tests, procedures, and acceptance criteria—with validated analytical procedures and allied reference materials that aid in conformity assessment. *HMC* can help ingredient manufacturers, herbal product manufacturers, regulatory agencies, and other stakeholders to assess conformance of herbal medicinal ingredients with independent public standards and to control the quality of articles moving in international commerce. The *HMC* is available at https://hmc.usp.org.

USP Dietary Supplements Compendium—The *Dietary Supplements Compendium* combines, in a two-volume set, *USP–NF* standards for dietary supplements, standards and information from the *Food Chemicals Codex*, regulatory and industry documents, and other tools and resources. It is published every two years as a hardcover print edition.

Food Chemicals Codex—The *Food Chemicals Codex* (*FCC*) is a compendium of internationally recognized monograph standards and tests for the purity and quality of food ingredients, e.g., preservatives, flavorings, colorings, and nutrients. *FCC* is published every two years, with supplements every six months, and is available in print and electronic formats. Proposed revisions to *FCC* are available for public viewing and comment through the *FCC Forum*. The *FCC Forum* can be accessed free of charge at forum.foodchemicalscodex.org.

OTHER USP RESOURCES

Chromatographic Columns—This comprehensive reference, previously titled *Chromatographic Reagents*, provides detailed information needed to conduct chromatographic procedures found in *USP–NF*. *Chromatographic Columns* lists the brand names of the column reagents cited in every proposal for new or revised gas- or liquid-chromatographic analytical procedures that have been published in *PF* since 1980. *Chromatographic Columns* also helps to track which column reagents were used to validate analytical procedures that have become official. The branded column reagents list is updated bimonthly and maintained on USP's website.

USP Dictionary—The *USP Dictionary of USAN and International Drug Names* provides, in a single volume, the most up-to-date United States Adopted Names of drugs; official *USP–NF* names; nonproprietary, brand, and chemical names; graphic formulas; molecular formulas and weights; CAS registry numbers and code designations; drug manufacturers; and pharmacologic and therapeutic categories. The *Dictionary* helps to ensure the accuracy of the following: product labeling; reports, articles, and correspondence; FDA regulatory filings; and pharmaceutical package inserts. It is published annually. For more information about the *Dictionary* see the USP website (http://www.usp.org/usp-nf/development-process/compendial-nomenclature).

afroozpharma@yahoo.com

People

2015–2020 Revision Cycle

Officers of the USP Convention, Board of Trustees, and the Council of Experts, Expert Committees, and Expert Panels

Officers (2015–2020)

Jesse L. Goodman, M.D., M.P.H.
President
Washington, DC
Timothy R. Franson, B.S. Pharm., M.D.
Past President
Indianapolis, IN
John E. Courtney, Ph.D.
Treasurer
Bethesda, MD
Susan S. de Mars, J.D.
Secretary
Rockville, MD

Board of Trustees (2015–2020)

Thomas R. Temple, B.S. Pharm., M.S., F.A.Ph.A.
Chair
Trustee At-Large
Des Moines, IA
Gregory E. Amidon, Ph.D.
Trustee Representing the Pharmaceutical Sciences
Ann Arbor, MI
Laura Herman, M.B.A., M.A.
Trustee Representing the Public
New Canaan, CT
Robert J. Meyer, M.D.
Trustee Representing the Medical Sciences
Charlottesville, VA
Marilyn K. Speedie, Ph.D.
Trustee Representing the Pharmaceutical Sciences
Minneapolis, MN
Stephen P. Spielberg, M.D., Ph.D.
Trustee Representing the Medical Sciences
Upper Gwynedd, PA
Gail R. Wilensky, Ph.D.
Trustee At-Large
Bethesda, MD
Susan C. Winckler, R.Ph., J.D.
Trustee At-Large
Alexandria, VA
Ron T. Piervincenzi, Ph.D.
Chief Executive Officer, February 2014–present (ex-officio)
Rockville, MD

Council of Experts (2015–2020)

Jaap Venema, Ph.D.
Chair, Council of Experts
Rockville, MD
Richard A. Blessing, M.S.
Chair, Chemical Medicines Monographs 1
North Chicago, IL
Edward K. Chess, Ph.D.
Chair, Biologics Monographs 3—Complex Biologics
McHenry, IL
Stephanie Y. Crawford, Ph.D., M.P.H.
Chair, Nomenclature and Labeling
Chicago, IL
Gigi S. Davidson, B.S.Pharm., DICVP
Chair, Compounding
Raleigh, NC
Michael R. De Felippis, Ph.D.
Chair, Biologics Monographs 1—Peptides
Indianapolis, IN
James E. De Muth, Ph.D., R.Ph.
Chair, General Chapters—Dosage Forms
Madison, WI
Jonathan W. DeVries, Ph.D.
Chair, Food Ingredients
Golden Valley, MN
Dennis E. Doherty, M.D., FCCP
Chair, Healthcare Quality
Lexington, KY
David A. Fay, Ph.D.
Chair, Chemical Medicines Monographs 6
St. Louis, MO
Mary G. Foster, Pharm.D., BFA
Chair, General Chapters—Packaging and Distribution
Blue Bell, PA
Dennis K. J. Gorecki, B.S.P., Ph.D.
Chair, Non-Botanical Dietary Supplements
Saskatoon, Saskatchewan, Canada
Xiaorong He, Ph.D.
Chair, General Chapters—Physical Analysis
Ridgefield, CT
Mary C. Houck, Ph.D.
Chair, Excipient Monographs 2
Norman, OK

afroozpharma@yahoo.com

David Hussong, Ph.D.
Chair, General Chapters—Microbiology
Kensington, MD
Kim C. Huynh-Ba, M.S.
Chair, Chemical Medicines Monographs 4
Newark, DE
Amy J. Karren, B.Sc.
Chair, Chemical Medicines Monographs 5
Flagstaff, AZ
Robin J. Marles, B.Sc., M.Sc., Ph.D.
Chair, Botanical Dietary Supplements and Herbal Medicines
Ottawa, Ontario, Canada
Michael G. Mulkerrin, Ph.D.
Chair, Biologics Monographs 2—Proteins
Hillsborough, CA
Eric Jon Munson, Ph.D.
Chair, Excipient Monographs 1
Lexington, KY
Bernard A. Olsen, Ph.D.
Chair, Chemical Medicines Monographs 3
Wake Forest, NC
Ernest Parente, Ph.D.
Chair, Chemical Medicines Monographs 2
Saint Louis, MO
Robert R. Singer, M.S.
Chair, General Chapters—Statistics
Union City, CA
Wesley E. Workman, Ph.D.
Chair, General Chapters—Biological Analysis
Saint Charles, MO
Nancy Lewen, B.Sc.
Chair, General Chapters—Chemical Analysis
Indianapolis, IN

Expert Committees (2015–2020)

[Note—The following listing of Expert Committees includes the Expert Panels that serve in an advisory capacity to the specific Expert Committee. The listing of Expert Panels and their membership represents those that have been fully formed and approved as of July 2015. Expert Panels are continuously formed and concluded throughout the USP revision cycle, and other membership listings will appear in the future.]

Expert Panels for the Council of Experts Executive Committee

Spanish Translation Expert Panel

ENRIQUE FEFER, PH.D., *Chair*
Peggy Casanova, M.Sc.; Ofelia Espejo, Ph.D.; Lidiette Fonseca González, M.Sc.; José Juárez Eyzaguirre, Ph.D.; Monica I. Hirschhorn, M.Sc.; José María Parisi, M.Sc.; Luisa Fernanda Ponce D'León Quiroga, Ph.D.; Oscar Quattrocchi, M.Sc.; Mauricio A. Seigelchifer, Ph.D.; Caroline R. Weinstein-Oppenheimer, Ph.D.

Expert Committees for the *United States Pharmacopeia*

Nomenclature and Labeling

STEPHANIE Y. CRAWFORD, PH.D., M.P.H., *Chair*
Mary B. Baker, Pharm.D.; Dawn M. Boothe, D.V.M., Ph.D.; Mike Cohen, M.S.; Elizabeth Igne Ferreira, Ph.D.; Karen Hauda, J.D., M.S.; Kent Johnson, M.Pharm.; Armen Melikian, Ph.D.; Ajay Parashar, M.S.; Ginette A. Pepper, R.N., Ph.D., FAAN; Thomas Reinders, Pharm.D.; Joanne G. Schwartzberg, M.D.; Maged Sharaf, Ph.D.; Eric Sheinin, Ph.D.; Thomas Tice, Ph.D.; Claudia Vincenzi, Ph.D., Pharm.D.; Gillian Woollett, Ph.D.

Pronunciation Expert Panel

WILLIAM M. HELLER, PH.D., *Chair*
Mary B. Baker, Pharm.D.; Stephanie Y. Crawford, Ph.D.; Kent Johnson, M.Pharm.; David F. Long, Ph.D.; Joan C. May, Ph.D.; Anthony Palmieri, Ph.D.; Ginette Pepper, Ph.D.; Thomas P. Reinders, Pharm.D.

Healthcare Quality

DENNIS DOHERTY, M.D., FCCP, *Chair*
Timothy Albertson, Ph.D.; Phil Ayers, Pharm.D.; Danial Edwin Baker, Pharm.D.; Mark Decerbo, Pharm.D.; Peter Glassman, M.B.B.S.; Roy Guharoy, Pharm.D., M.B.A.; Raymond Hohl, M.D.; Duane Kirking, Ph.D.; Raymond Love, Pharm.D.; Oneka Bynoe Marriott, D.O., M.P.H.; Marcus Reidenberg, M.D.; Melody Ryan, Pharm.D.; Joanne Schwartzberg, M.D.; Patricia Sokol, J.D.; J. Russell Teagarden, D.M.H.; Jeanne Tuttle, B.S. Pharm.; Terri Warholak, Ph.D.

Drug Allergy and Intolerance Classification Expert Panel

RAYMOND LOVE, PHARM.D., *Chair*
Gay Dolin, M.S.N.; Roy Guharoy, Pharm.D., M.B.A.; Robert Hausam, M.D.; Russell Leftwich, M.D.; Robert McClure, M.D.; Gerald McEvoy, Pharm.D.; Tejal Patel, Pharm.D.; Seth Powsner, Ph.D.; George Allen Robinson, B.S. Pharm; Shelly Spiro, B.S. Pharm

Health Literacy Expert Panel

JOANNE G. SCHWARTZBERG, M.D., *Chair*
Cindy Brach, MPP; Joseph Chebli, Pharm.D.; Nicole Cook, Ph.D.; Terry Davis, Ph.D.; Radhika Devraj, Ph.D.; Oneka Bynoe Marriott, D.O., M.P.H.; Gerald McEvoy, Pharm.D.; Juliet Nguyen, Pharm.D.; Ruth Parker, M.D.; Seth Powsner, Ph.D.; N. Lee Rucker; Patricia Sokol, J.D.; Charity Strothers, Pharm.D.; J. Russell Teagarden, D.M.H.; Keith Trettin, B.S. Pharm

Model Guidelines for All Marketed Products Expert Panel

DUANE M. KIRKING, PH.D., *Chair*
Daniel E. Baker, Pharm.D.; Lauren Hoffman, Pharm.D.; Gerald McEvoy, Pharm.D.; Seth Powsner, Ph.D.; N. Lee Rucker; Brian Solow, M.D.; J. Russell Teagarden, D.M.H.; Jeanne Tuttle, B.S. Pharm

Parenteral Nutrition Safety Expert Panel

PHIL AYERS, PHARM.D., *Chair*
Mary B. Baker, Pharm.D.; Elizabeth Bobo, M.S.; Denise Bohrer, Ph.D.; Joseph Boullata, Pharm.D.; Mark Decerbo, Pharm.D.; Kathleen M. Gura, Pharm.D.; Deborah Houston, Pharm.D.; Matthew T. Jenkins, M.S.; Gordon Scott Sacks, Pharm.D.; Maureen Schanck, Pharm.D.; David Seres, M.D.; Connie Rae Sullivan, B.S. Pharm

Chemical Medicines Monographs 1

RICHARD A. BLESSING, M.S., *Chair*
Gennady Ananchenko, Ph.D.; Elizabeth (Betsy) Cariello; Alain Duguet, Ph.D.; Leslie Furr, M.S.; Rupa Iyer, M.S.; Monika Jain, Ph.D.; Greg Kaster, M.S.; Jasmina Novakovic, Ph.D.; Naidu Petla, Ph.D.; Jeff Rohrer, Ph.D.; David Schuck, Ph.D.; Nilesh Shinde, M.S.; Jan Srbek, Ph.D.; Giordano Trazzi, Ph.D.

Chemical Medicines Monographs 2

ERNEST PARENTE, PH.D., *Chair*
Mahmoud Al Omari, Ph.D.; Allan Bokser, Ph.D.; Matthew Borer, Ph.D.; Jama Elmi, Ph.D.; Michael Koberda, Ph.D.; Joan C. May, Ph.D.; Beth Minter; Maria Ines Santoro, Ph.D.; Jeff Schwartzenhauer, M.S.; Dennis Stephens, Ph.D.; Sumathi V. Rao, Ph.D.; Luciano Virgili, Ph.D.;

afroozpharma@yahoo.com

Zhenyu Wang, Ph.D.; Joseph Yakupkovic, Ph.D.; Patrick Yat, Ph.D.

Chemical Medicines Monographs 3
BERNARD A. OLSEN, PH.D., *Chair*
Samuel Akapo, Ph.D.; Bianca Avramovitch, Ph.D.; Amy Barker, Ph.D.; Lynn Blessing, M.S.; Thomas Broadbent, Ph.D.; Ian Chung, Ph.D.; Debashis Das, Ph.D.; Jeffrey Fleitman, Ph.D.; Yuri Goldberg, Ph.D.; Qamrul Islam, M.S.; Eric Kesslen, Ph.D.; Pauline Lacroix, M.S.; Donald Parsons, Ph.D.; David Reed, M.B.A.; Murugan Saravanan, M.S.; Joseph Stowell, Ph.D.

Chemical Medicines Monographs 4
KIM C. HUYNH-BA, M.S., *Chair*
Malleswara Reddy Annarapu, Ph.D.; Mukul Dalvi, Ph.D.; Josep Maria de Ciurana Gay, M.S.; Simona Dragan, Ph.D.; Natalia Borisovna Epshtein, Pharm.D., M.S.N.; Quanyin Gao, Ph.D.; Jerome M. Lewis, Ph.D.; Oscar Liu, Ph.D.; Mariann Neverovitch, M.S.; Patrick Noland, M.S.; James A. Ponto, M.S.; Hemant Kumar Sharma, Ph.D.; William Taraszewski, Ph.D.; Martin Williamson, Ph.D.; Min Xia, Ph.D.; Steve S. Zigler, Ph.D.

⟨821⟩ Identification and Assay of Radionuclides and ⟨1821⟩ Radioactivity Theory and Practice and ⟨1823⟩ Drugs for Positron Emission Tomography Expert Panel
SALLY W. SCHWARZ, M.S., *Chair*
Cathy Sue Cutler, Ph.D.; Jonathan M. Fitzsimmons, Ph.D.; Paula M. Jacobs, Ph.D.; Thijs Kroon, Pharm.D.; Jerome M. Lewis, Ph.D.; Roger Moroney, M.S.; James A. Ponto, M.S.; Duann V. Thistlethwaite, B.S.; Steven S. Zigler, Ph.D.

Non-Radioactive Imaging Agents Expert Panel
JEROME M. LEWIS, PH.D., *Chair*
Francisco Aguilar-Parrilla, Ph.D.; James Walter Brodack, Ph.D.: Dilip R. Choudhury, Ph.D.; Francette Delaloge, Ph.D.; Joseph Louis Glajch, Ph.D.; Ernest Victor Groman, Ph.D.; Gordon Craig Hill, Ph.D.; Aurelie Mieze-Richard, Pharm.D.; Patrick Noland, M.S.; Scott Roberts

Radioactive Drugs Expert Panel
JAMES A. PONTO, M.S., *Chair*
Corinne Bensimon, Ph.D.; Jonathan M. Fitzsimmons, Ph.D.; Umesh Gangadharmath, Ph.D.; Thijs Kroon, Pharm.D.; Adrian Nunn, Ph.D.; David Pipes, Ph.D.; Kara Weatherman, Pharm.D.; Martin Williamson, Ph.D.; Steve Zigler, Ph.D.

Chemical Medicines Monographs 5
AMY J. KARREN, *Chair*
D.J. Doan, M.S; Sushil Gangwal, Ph.D.; Assad Kazeminy, Ph.D.; Min Li, Ph.D.; Judy Lin, M.S.; Pauline McGregor, Ph.D.; Marian Meyer, Ph.D., M.B.A.; Jonathan Parks; Justin Pennington, Ph.D.; Vijaya Ramesh, B.Pharm.; Gurvinder Singh Rekhi, Ph.D.; Iffaaz Salahudeen, Ph.D.; Mary W. Seibel; Hameraj Singh, Ph.D.; Michael Skibic, M.S.

Chemical Medicines Monographs 6
DAVID A. FAY, PH.D., *Chair*
Seamus Boland; Robert Graham Buice, Ph.D., M.B.A.; Tina Engel, Ph.D.; Timothy Gilmor, Ph.D.; Carmen Gonzalez, Ph.D.; John Herries, Ph.D.; Todd Lewis, M.S.; William Long, Ph.D.; Phil Nethercote, Ph.D.; Raphael Ornaf, Ph.D.; David Hitchcock Rogers, Ph.D.; Thomas Rosanske, Ph.D.; Christina Szabo, Ph.D.; Reinhard Walter, Ph.D.; Xiaoping Wang, Ph.D.; Kylen Whitaker, Ph.D.; Zeena Williams, Ph.D.

Acetaminophen OTC Expert Panel
KYLEN WHITAKER, PH.D., *Chair*
Tina M. Engel, Ph.D.; David A. Fay, Ph.D.; Saulius A. Gylys; Michael T. Rankin, M.S.; David H. Rogers, Ph.D.; Gregory K. Webster, Ph.D.; Jonathan Zeszotarski, Ph.D.

Biologics Monographs 1—Peptides
MIKE DE FELIPPIS, PH.D., *Chair*
Wilfried Arz, Ph.D.; Chaim Eidelman, Ph.D.; Gerhard Haas, Ph.D.; Morten Hach, M.S.; Marion King, Ph.D.; Jean-Marc Poudrel, Ph.D.; Harold Rode, Ph.D.; Raimon Rubires, Ph.D.; Zachary Shriver, Ph.D.; Ved Srivastava, Ph.D.; Aleksander Swietlow, Ph.D.; Michael Verlander, Ph.D.

Glatiramer Expert Panel
ZACHARY SHRIVER, PH.D., *Chair*
Joseph Louis Glajch, Ph.D.; Gyongyi Gratzl, Ph.D.; Satyanarayana Kota, Ph.D.; Todd A. Osiek, Ph.D.; Marcia Cecilia Rusjan; Rakesh Singh Shekhawat, Ph.D.; Zachary Shriver, Ph.D.; Rene Thuermer, Ph.D.; Michael Verlander, Ph.D.; Vera Weinstein, Ph.D.

Glucagon Expert Panel
HAROLD RODE, PH.D., *Chair*
Jan Amstrup, Ph.D.; Matthew W. Borer, Ph.D.; Adrian F. Bristow, Ph.D.; Gerhard Manfred Haas, Ph.D.; Anne Munk Jespersen, Ph.D.; Elizabeth Clark Kramer, Ph.D.

Biologics Monographs 2—Proteins
MICHAEL MULKERRIN, PH.D., *Chair*
Gregory Beck, Ph.D.; Heather Boux, Ph.D.; Chris Burns, Ph.D.; Frédéric Carrière, Ph.D.; Stefan Christians, Ph.D.; Michel Girard, Ph.D.; Anne Munk Jespersen; Sridevi Khambhampaty, Ph.D.; Robert Mayer, Ph.D.; Ned Mozier, Ph.D.; Dhananjay Patankar, Ph.D.; Mauricio Seigelchifer, Ph.D.; Jill Crouse-Zeineddini, Ph.D.

Fc Function Assays Expert Panel
JILL CROUSE-ZEINEDDINI, PH.D., *Chair*
Shan Chung, Ph.D.; Marina Feschenko, Ph.D.; Scott Kuhns, Ph.D.; LeeAnn Machiesky, M.S.; Ned Mozier, Ph.D.; Veena Pai Raiker, Ph.D.; Bhavin Parekh, Ph.D.; Max Tejada, Ph.D.

Biologics Monographs 3—Complex Biologics
EDWARD K. CHESS, PH.D., *Chair*
Mehrshid Alai, Ph.D.; Pascal Anger, Ph.D.; Parastoo Azadi, Ph.D.; Svetlana Bergelson, Ph.D.; Barbara Blum, Ph.D., M.P.H.; Mirella Ezban, Ph.D.; Elaine Gray, Ph.D.; Donald MacLean, Ph.D.; Nicole Provost, Ph.D.; Elizabeth I. Read, M.D.; Peter Vandeberg, Ph.D.; Christian Viskov, Ph.D.; Darin Weber, Ph.D.

Bovine Unfractionated Heparin Expert Panel
WESLEY E. WORKMAN, PH.D., *Chair*
Tania Andrade, B.S. Pharm.; Irene Bartoli, B.Sc.; Maria Leticia Bertot, Pharm.D.; Elaine Gray, Ph.D.; Marco Guerrini, Pharm.D.; Kristian Johansen, Ph.D.; Robert Linhardt, Ph.D.; Barbara Mulloy, Ph.D.; Marilene Nuss Rangel; Zachary Shriver, Ph.D.; Pearle Torralba, Ph.D.; Christian Viskov, Ph.D.

CD-34 Positive Cells Expert Panel—CONCLUDED
NICOLE M. PROVOST, PH.D., *Chair*
Ruud Hulspas, Ph.D.; Elizabeth I. Read, M.D.; Michael D. Rosu-Myles, Ph.D.; Luisa Saraiva, Ph.D.; Richard J. Stebbings, Ph.D.; D. Robert Sutherland, M.Sc.; Lili Wang, Ph.D.; Albertus W. Wognum, Ph.D.

Low Molecular Weight Heparins Expert Panel
ELAINE GRAY, PH.D., AND EDWARD K. CHESS, PH.D., *Co-Chairs*
Nicolas C.R. Amiot, Ph.D.; Malleswarareddy Annarapu, Ph.D.; Christopher P. Bryant, Ph.D.; Ishan Capila, Ph.D.;

afroozpharma@yahoo.com

Venkatesan S. Chidambaram, Ph.D.; Gyongyi S. Gratzl, Ph.D.; Kristian Johansen, Ph.D.; Edwin Rudolf Kellenbach, Ph.D.; Barbara Mulloy, Ph.D.; Anna K.Y. Nordin; Bruna Parma, M.Sc.; Zachary Shriver, Ph.D.; Christian Viskov, Ph.D.

General Chapters—Biological Analysis
WESLEY E. WORKMAN, PH.D., *Chair*
Robert Bell, Ph.D.; Mahesh Bhalgat, Ph.D.; Adrian Bristow, Ph.D.; Christopher Jones, Ph.D.; Jeremy Kunkel, Ph.D.; Huijuan Li, Ph.D.; Kenneth Miller, Ph.D.; Anthony Mire-Sluis, Ph.D.; Anthony A.G. Ridgway, Ph.D.; Wendy Saffell-Clemmer, M.S.; Martin Vanderlaan, Ph.D.; Teruhide Yamaguchi, Ph.D.; Earl Zablackis, Ph.D.

Cell Banking Expert Panel
ROBERT BELL, PH.D., *Chair*
Anne Gondran, Ph.D.; Luhong He, Ph.D.; Ruud Hulspas, Ph.D.; Jette Dina Kreiberg, Ph.D.; Michael Laird, Ph.D.; Lye Theng Lock, Ph.D.; Archie Lovatt, Ph.D.; Sam Yaghmour, M.S.; Earl Zablackis, Ph.D.

Residual DNA in Biotechnology-Derived Products Expert Panel
WESLEY E. WORKMAN, PH.D., *Chair*
Pascal R. Anger, Ph.D.; Jon R. Borman; Audrey Chang, Ph.D.; Scott Kuhns, Ph.D.; Weihong Wang, Ph.D.; Judith Zhu-Shimoni, Ph.D.

Vaccine Polysaccharide NMR Identity Testing Expert Panel
CHRISTOPHER JONES, PH.D., *Chair*
Yves Aubin, Ph.D.; Francesco Berti, Ph.D.; Cristiana Campa, Ph.D.; Thomas P. Jacques, Ph.D.; Michael T. Jones, Ph.D.; Jeremy P. Kunkel, Ph.D.; Neil Ravenscroft, Ph.D.; Philippe Talaga, Ph.D.; Earl Zablackis, Ph.D.

Viral Vaccines Expert Panel
EARL ZABLACKIS, PH.D., *Chair*
Lopa Adhikary, Ph.D.; Luca Benetti, Ph.D.; Sunil Gairola, Ph.D.; Lucy Gisonni-Lex, M.S.; Keith Howard, Ph.D.; Christopher Jones, Ph.D.; Archie Lovatt, Ph.D.; Brij Patel, Ph.D.; Silke Schepelmann, Ph.D.; Vaneet Sharma, Ph.D.; Mark Van Ooij, Ph.D.

General Chapters—Chemical Analysis
NANCY LEWEN, B.SC., *Chair*
Anthony Bevilacqua, Ph.D.; Christopher Burgess, Ph.D.; Robert Cambron, Ph.D.; Thomas DiFeo, Ph.D.; John Dolan, Ph.D.; Joseph Louis Glajch, Ph.D.; John Hammond; John Hinshaw, Ph.D.; Brent Kleintop, Ph.D.; Steven Leinbach, M.S.; Gregory Martin, M.S.; Nuno Matos, B.Sc.; Oscar Quattrocchi, M.Sc.; Helmut Rockstroh, Ph.D.; Mark Schweitzer, Ph.D.; Timothy Shelbourn, M.S.; Rostyslaw O. Slabicky, B.Sc.; Teri Soli, Ph.D.; Kevin A. Swiss, Ph.D., Timothy J. Wozniak, Ph.D.

Chemometrics Expert Panel
PEI CHEN, PH.D., AND NUNO MATOS, *Co-Chairs*
Chunsheng Cai, Ph.D.; Robert Tom Cambron, Ph.D.; Peter de B. Harrington, Ph.D.; Mark J. Henson, Ph.D.; Yang (Angela) Liu, Ph.D.; Zhenqi (Pete) Shi, Ph.D.; Yvan C.D. Vander Heyden, Ph.D.; Stanislav O. Zakharkin, Ph.D.; Lin Zhang, Ph.D.

Elemental Impurities Expert Panel
NANCY LEWEN, B.SC., *Chair*
Charles Barton, Ph.D., DABT; Courtney M. Callis, MPH, DABT; Steven J. Dentali, Ph.D.; Anna M. Fan, Ph.D., DABT; Edward James Fletcher; Bruce A. Fowler, Ph.D., A.T.S.; Roland Frotschl; Assad J. Kazeminy, Ph.D.; Richard Ko, Pharm.D., Ph.D.; Melissa M. Phillips, Ph.D.; Timothy L. Shelbourn, M.B.A., M.S.

Good Documentation Practices Expert Panel—CONCLUDED
KIM C. HUYNH-BA, M.S., *Chair*
Kathleen V. Brady, B.S.; Frank J. Diana, Ph.D.; Lisa Ann Fink, MBA; Craig Hamilton, Ph.D.; Judy Lin, M.S.; Anjan K. Mittal, M.Pharm.; Kevin A. Swiss, Ph.D.

Modernization of Identification Tests Expert Panel
NANCY LEWEN, B.SC., *Chair*
Michelle R. Adamson; Anthony C. Bevilacqua, Ph.D.; Geoffrey P.R. Carr, Ph.D.; Pei Chen, Ph.D.; Jonathan W. DeVries, Ph.D.; Maryna Dmitriieva, Ph.D.; Michael Hornig, Ph.D.; Bernard A. Olsen, Ph.D.; Jeffrey S. Rohrer, Ph.D.; Anne M. Warner, Ph.D.

⟨467⟩ Residual Solvents Expert Panel
OSCAR A. QUATTROCCHI, M.SC., *Chair*
Coleman C. Chasteen, M.S.; John Connelly, Ph.D.; Jeffrey Fleitman, Ph.D.; John V. Hinshaw, Ph.D.; Bruce P. Johnson, Ph.D.; Eric C. Kesslen, Ph.D.; Brent Kleintop, Ph.D.; Elizabeth Kovacs; Paul W. Lockwood, M.S.; Gregory P. Martin, M.S.; Kevin A. Swiss, Ph.D.; Yuwen Wang, Ph.D.

Validation and Verification Expert Panel
GREGORY P. MARTIN, M.S., *Chair*
Kimber L. Barnett, Ph.D.; Christopher Burgess, Ph.D.; Paul D. Curry, Ph.D.; Joachim Ermer, Ph.D.; Gyongyi S. Gratzl, Ph.D.; John P. Hammond, FRSC; Elizabeth Kovacs; David J. LeBlond, Ph.D.; Rosario LoBrutto, Ph.D.; Anne K. McCasland-Keller, Ph.D.; Pauline L. McGregor, Ph.D.; Phil Nethercote, Ph.D.; Allen C. Templeton, Ph.D.; David P. Thomas, Ph.D.; M.L. Jane Weitzel

Water for Analytical and Pharmaceutical Purposes Expert Panel
TERI C. SOLI, PH.D., *Chair*
Anthony C. Bevilacqua, Ph.D.; Lucia Clontz, D.H.Sc., M.Sc.; Max S. Lazar; Nancy Lewen, B.Sc.; Bruno Rossi, M.S.; Rostyslaw O. Slabicky, B.Sc.

General Chapters—Physical Analysis
XIAORONG HE, PH.D., *Chair*
Shaukat Ali, Ph.D.; Lawrence H. Block, Ph.D.; Geoff Carr, Ph.D.; Martin Coffey, Ph.D.; Tim Freeman; David J. Goldfarb, Ph.D.; Bruno Hancock, Ph.D.; Stephen Hoag, Ph.D.; Mario Hubert, Ph.D.; Richard Meury; Matthew Mullarney, M.S.; Prabu Nambiar, Ph.D.; Myke Scoggins, Ph.D.; Changquan Sun, Ph.D.; Allen Templeton, Ph.D.; Eloise Welfare, Ph.D.; Dale Wurster, Ph.D.; Bing-Shiou Yang, Ph.D.; Geoff Zhang, Ph.D.

Impurities in Drug Substance and Drug Products Expert Panel
PRABU NAMBIAR, PH.D., M.B.A., *Chair*
Abdullah M. Al-Mohizea, Ph.D.; Shaukat Ali, Ph.D.; Steven W. Baertschi, Ph.D.; Judy P. Boehlert, Ph.D.; Robert G. Buice, Ph.D.; Greg J. Davies; Xiaorong He, Ph.D., M.B.A.; Kim C. Huynh-Ba, M.S.; Michael Koberda, Ph.D.; Robert E. Osterberg, R.Ph., Ph.D., Fellow-ATS; Ernest Parente, Ph.D.; Oscar Quattrocchi, M.Sc.; David H. Rogers, Ph.D.; Mark Schweitzer, Ph.D.; Mary W. Seibel; Rostyslaw O. Slabicky, B.Sc.; Teri C. Soli, Ph.D.; Kevin A. Swiss, Ph.D.

General Chapters—Dosage Forms
JAMES E. DE MUTH, PH.D., *Chair*
Emmanuel Akala, Ph.D.; Ilgaz Akseli, Ph.D.; Scott Aldrich; Susan Cady, M.S.; Paul Curry, Ph.D.; Mario González, Ph.D.; Vivian A. Gray, B.S.; Ralph Heasley, Ph.D.; Anthony Hickey, Ph.D.; Michael Houghton; Munir A. Hussain, Ph.D.; Johannes Krämer, Ph.D.; Stefan Leiner, Ph.D.; David Long, Ph.D.; John Mauger, Ph.D.; Colin Minchom, Ph.D.; Jolyon Mitchell, Ph.D.; Muller Pierre-

afroozpharma@yahoo.com

Alain, Ph.D.; Guirag Poochikian, Ph.D.; Chetan Pujara, Ph.D.; Shobhan Sabnis, Ph.D.; John Shabushnig, Ph.D.; Jason Suggett, Ph.D., M.B.A.; Raymond D. Skwierczynski, Ph.D.; Monica Tejwani, Ph.D.; Thomas Tice, Ph.D.; Kevin Warner, Ph.D.; Mehran Yazdanian, Ph.D.

⟨771⟩ Ophthalmic Preparation Expert Panel
ASHIM K. MITRA, PH.D., *Chair*
Dale S. Aldrich, Ph.D.; Cynthia M. Bach, M.S.; Martin Coffey, Ph.D.; Paul Curry, Ph.D.; Jeffrey S. Fleitman, Ph.D.; John Mauger, Ph.D.; Seshadri Neervannan, Ph.D.; Stacey M. Platzer; Chetan Pujara, Ph.D.; Satish K. Singh, Ph.D.; Monica Tejwani, Ph.D.; Thomas R. Tice, Ph.D.

⟨788⟩ Particulate Matter in Injections Expert Panel
DALE S. ALDRICH, PH.D., *Chair*
Dan Berdovich; Kevin Dahl, Ph.D.; Robert Gavin, M.S.; Kent A. Peterson; Dean Ripple, Ph.D.

Liquid-Filled Capsules Expert Panel
VIVIAN A. GRAY, B.S., *Chair*
Ewart Cole, Ph.D.; Jean-Luc Colin, Ph.D.; Joe Fotso, Ph.D.; Munir A. Hussain, Ph.D.; Vi N. Schmidt, M.S.; Stephen C. Tindal; Madhusudan Vudathala, M.Pharm., M.B.A.

Performance Test for Semisolid Dosage Forms Expert Panel
KAILAS THAKKER, PH.D., *Chair*
Eric Beyssac, Ph.D.; Bryan Crist; James E. De Muth, Ph.D.; Geoffrey N. Grove, Ph.D.; L. Thomas Hall, Ph.D.; John S. Heaney; Matthew Kersey, Ph.D.; Hans-Juergen Knitter; Patricia L. Lee, M.S.; Patrick C. Mahn; William M. Rosenthal; Steve W. Shaw

Solubility Criteria for Veterinary Drugs Expert Panel
MARIO A. GONZALEZ, PH.D., *Chair*
Susan Cady, M.S.; Bryan Crist; Robert P. Hunter, M.S., Ph.D.; Mark G. Papich, M.S., D.V.M.; Alan F. Parr, Pharm.D., Ph.D.; Monica Tejwani, Ph.D.

Use of Enzymes in the Dissolution Testing of Gelatin Capsules Expert Panel
VIVIAN A. GRAY, B.S., *Chair*
Ewart Cole, Ph.D.; Joan M. Dalla Riva Toma, Ph.D.; Luigi Ghidorsi; Jian-Hwa Guo, Ph.D.; Feixue Han, Ph.D.; Jian-Hwa Han, Ph.D.; Christopher T. Hosty; Jianmei D. Kochling, Ph.D.; Johannes Krämer, Ph.D.; Thomas Langdon; Steven R. Leinbach; Stefan Leiner, Ph.D.; Gregory P. Martin, M.S.; Steven M. Meyerhoffer, Ph.D.; Richard C. Moreton, Ph.D.; Krishnaswamy S. Raghavan, Ph.D.; Edward Shneyvas, Ph.D.; Jason A. Suggett, Ph.D.; Stephen C. Tindal; Madhusudan Vudathala, M.Pharm., M.B.A.; Hu Wang, M.S.

Visual Inspection of Parenterals Expert Panel
RUSSELL E. MADSEN, M.S., *Chair*
Dale S. Aldrich, Ph.D.; John D. Ayres, M.D., J.D.; Roy Cherris; John G. Shabushnig, Ph.D.; Deborah Shnek, Ph.D.

General Chapters—Microbiology
DAVID HUSSONG, PH.D., *Chair*
James Agalloco, M.S.; James Akers, Ph.D.; Dilip Ashtekar, Ph.D.; Anthony Cundell, Ph.D.; Dennis Guilfoyle, Ph.D.; Rajesh Gupta, Ph.D.; Russell Madsen, M.S.; Karen McCullough, M.S.; Robert Mello, Ph.D.; David Roesti, Ph.D.; Donald Singer, M.S.; Paul Stinavage, Ph.D.; Edward Tidswell, Ph.D.

Modern Microbiological Methods Expert Panel
ANTHONY CUNDELL, PH.D., AND EDWARD TIDSWELL, PH.D., *Co-Chairs*
Thierry Bonnevay, Ph.D.; Ralph Breton, B.S. Pharm.; Claudio Denoya, Ph.D.; Gary du Moulin, Ph.D.; John Duguid, B.Sc.; Rajesh Gupta, Ph.D.; David Hussong, Ph.D.; Matthew Jenkins, M.S.; Amy Lynn McDaniel, Ph.D.; Michael Miller, Ph.D.; Felix Montero Julian, Ph.D.; David Newon, Ph.D.; Kuldip Patel; Steven Richter, Ph.D.; David Roesti, Ph.D.; Yongqiang Zhang, Ph.D.; Steve S. Zigler, Ph.D.

General Chapters—Packaging and Distribution
MARY G. FOSTER, PHARM.D., BFA, *Chair*
Bettine Boltres, Ph.D.; Glaucia Braga, Ph.D.; Jeffrey Carrico, Pharm.D.; Chris Chandler, Pharm.D.; Michael N. Eakins, Ph.D.; Dana Guazzo, Ph.D.; Renaud Janssen, Ph.D.; Dennis Jenke, Ph.D.; Wendy Mach, B.Sc.; Dan Malinowski; Daniel Norwood, Ph.D.; Devinder Pal, M.Pharm.; Robert Seevers, Ph.D.; Cheryl Stults, Ph.D.; Li Xiong, Ph.D.; Gao Yonghua, B.S.Pharm.

⟨381⟩ Elastomeric Closure for Injections Expert Panel
DIANE M. PASKIET, M.S., and RENAUD JANSSEN, PH.D., *Co-Chairs*
Douglas J. Ball, M.S., DABT; Michael N. Eakins, Ph.D.; Dana Guazzo, Ph.D.; Dennis R. Jenke, Ph.D.; Heinz Kirchmeyer, Ph.D.; Philippe LeGall, M.S.; Daniel L. Norwood, Ph.D.; Michael A. Ruberto, Ph.D.; Wai (John) Wong, Ph.D.; Lisa M. Yoest, M.S.

⟨659⟩ Packaging and Storage Requirements Expert Panel
CHRIS CHANDLER, PHARM.D., *Chair*
Glaucia Braga, B.Sc.; Jeffrey Carrico, Pharm.D.; Mary G. Foster, Pharm.D. BFA; Eleanor Freeman, B.S.; Wendy Mach, B.Sc.; Devinder Pal, M.Pharm.; Robert H. Seevers, Ph.D.; Gao Yonghua, B.S. Pharm; Li Xiong, Ph.D.

Biocompatibility of Materials Used in Packaging Systems, Medical Devices, and Implants Expert Panel
DANIEL L. NORWOOD, PH.D., *Chair*
Douglas J. Ball, M.S.; Stephen A. Barat, Ph.D.; William P. Beierschmitt, Ph.D.; Denise Bohrer, Ph.D.; Tage C.G. Carlson, Ph.D.; Michael N. Eakins, Ph.D.; Jill A. Glosson, B.A.; John Iannone, B.Sc.; Renaud Janssen, Ph.D.; Douglas E. Kiehl, M.Sc.; Wendy Mach, B.Sc.; Anita Y. Sawyer, M.S.; Cheryl Stults, Ph.D.

Clinical Trial Materials (GDP) Expert Panel
MARY G. FOSTER, PHARM.D., BFA, *Chair*
Rafik H. Bishara, Ph.D.; Glaucia K. Braga, Ph.D.; Jeffrey Carrico, Pharm.D.; Steven A. Jacobs, M.B.A.; Martin Jeiven, M.S.; Claude Jolicoeur, B.S.

⟨661.3⟩ Plastic Systems Used for Manufacturing Pharmaceutical Products Expert Panel
DENNIS R. JENKE, PH.D., *Chair*
Denise G. Bestwick, B.S.; Weibing Ding, Ph.D.; Michael N. Eakins, Ph.D.; Mary G. Foster, Pharm.D., BFA; James Hathcock, Ph.D.; Jerold (Jerry) M. Martin, M.S.; Diane M. Paskiet, M.S.; Robert Steininger; Cheryl L.M. Stults, Ph.D.; Ken M. Wong, M.Sc.

General Chapters—Statistics
ROBERT R. SINGER, M.S., *Chair*
Bruno Boulanger, Ph.D.; Richard Burdick, Ph.D.; David Christopher, M.S.; David Lansky, Ph.D.; Dave LeBlond, Ph.D.; Juris Meija, Ph.D.; Anthony Okinczyc, M.P.H.; Peter Rigsby, M.S.; Dennis Sandell, Ph.D.; Timothy Schofield, M.A.; Charles Tan, Ph.D.; Edwin van den Heuvel, Ph.D.; Jane Weitzel; Harry Yang, Ph.D.

Content Uniformity with Large Sample Sizes Expert Panel
DENNIS SANDELL, PH.D., *Chair*
James S. Bergum, Ph.D.; Walter Hauck, Ph.D.; Jeffrey Hofer, M.S.; Gregory L. Larner, M.S.

afroozpharma@yahoo.com

Expert Committees for the *National Formulary*

Excipients Monographs 1
ERIC MUNSON, PH.D., *Chair*
Thiago Carvalho, Ph.D.; Brian Carlin, Ph.D.; Richard Cawthorne, Ph.D.; Richard Creekmore, Ph.D.; Vivek Dave, Ph.D.; Felicitas Guth; Otilia Koo, Ph.D.; Devalina Law, Ph.D.; Phil Merrell, Ph.D.; Dominic Moore; Chris Moreton, Ph.D.; Jasmine Musakhanian, M.S.; Charles Vesey, M.S.; Richard Wendt, Ph.D.

⟨1059⟩ Excipient Performance Expert Panel
ERIC A. SCHMITT, PH.D., *Chair*
Abdullah M. Al-Mohizea, Ph.D.; Shaukat Ali, Ph.D.; Lawrence H. Block, Ph.D.; Patrick Deluca, Ph.D.; Carl Frey, M.S.; Xiaorong He, Ph.D., M.B.A.; Stephen W. Hoag, Ph.D.; Michelle A. Long, Ph.D.; Richard C. Moreton, Ph.D.; Prabu Nambiar, Ph.D., M.B.A.; James A. Ponto, M.S.; Kent Sternitzke, Ph.D.; Kevin A. Swiss, Ph.D.; Sean V. Taylor, Ph.D.

⟨1197⟩ Good Distribution Practices for Bulk Pharmaceutical Excipients Expert Panel
RICHARD C. MORETON, PH.D., *Chair*
Lawrence H. Block, Ph.D.; William Dale Carter, M.S.; Zak T. Chowhan, Ph.D.; Marc Fages; Elizabeth Ferguson-Brown; Mary G. Foster, Pharm.D., BFA; Linda A. Herzog, M.B.A.; Ashok V. Katdare, Ph.D.; Zakiya Kurdi, Ph.D.; Edward G. Malawer, Ph.D., CQA; Frank Milek, Ph.D.; Becca Mitchell; Dwight Mutchler; Garnet E. Peck, Ph.D.; Mike Schultz, R.Ph.; Alexa Smith, M.S.; Glenn Sokoloski; Kelly Taylor; Jiasheng Tu, Ph.D.

Excipients Monographs 2
MARY C. HOUCK, PH.D., *Chair*
Lawrence H. Block, Ph.D.; Andrew Bluj; Tim Cabelka, Ph.D.; Arya Jayatilaka, Ph.D.; Russell Maus, Ph.D.; Robert E. Osterberg, R.Ph., Ph.D., Fellow-ATS; Julie Warner Pier, M.S.; Anisul Quadir, Ph.D.; Gwen Rucker; Barbara Serr, Ph.D.; Huimin Sun, Ph.D.; Jiasheng Tu, Ph.D.; Fan Wu, Ph.D.; Timothy Yasika

Glycerin Expert Panel
TIM B. CABELKA, PH.D., *Chair*
Carlos E. Bortolotto, B.S.; Frances K. Byrne, M.S.; Ian A. Duncan, Ph.D.; Balaji V. Kadri, M.Pharm., M.Sc., MBA; Tanja Natterer; Marian J. Rinken, Ph.D.; Gwen E. Rucker, B.S.; David A. Sharknas, B.S.; Hong Zhou, Ph.D.

Povidones Expert Panel—CONCLUDED
BERNHARD D. FUSSNEGGER, PH.D., AND CARL PERINI, M.S., *Co-Chairs*
Feng Chen, Ph.D.; David J. Fillar, MBA; Edward G. Malawer, Ph.D.; Syed A.A. Rizvi, Ph.D.; John W. Spink, Ph.D.; Fan Wu, Ph.D.

Talc Methods Expert Panel
JULIE WARNER PIER, M.S., and MARTIN RUTSTEIN, PH.D., *Co-Chairs*
Daniel Crane; Sean M. Fitzgerald, B.Sc.; Mickey E. Gunter, Ph.D.; Don Halterman, M.S.; Mary C. Houck, Ph.D.; Lee Poye, B.Sc.; Matthew S. Sanchez, Ph.D.; Alan M. Segrave, B.Sc.; Gary P. Tomanino, B.Sc.; Drew R. Van Ordern, M.A.; James Webber, Ph.D.

Expert Committees for the *USP* and the *Dietary Supplements Compendium*

Botanical Dietary Supplements and Herbal Medicines
ROBIN J. MARLES, PH.D., *Chair*
Thomas Brendler, B.A.; Josef A. Brinckmann; Paula Naomi Brown, Ph.D.; Angela Calderon, Ph.D.; Steven Dentali, Ph.D.; Edward Fletcher, B.A.; Stefan Gafner, Ph.D.; Joerg Gruenwald, Ph.D.; De-an Guo, Ph.D.; Sukhdev Swami Handa, M.Pharm., Ph.D.; James Harnly, Ph.D.; Craig Hopp, Ph.D.; Scott A. Jordan, Ph.D.; Ikhlas Khan, Ph.D.; Richard Ko, Pharm.D., Ph.D.; Tieraona Low Dog, M.D.; Mirtha Navarro, Ph.D.; Pilar Pais, Ph.D.; Guido Pauli, Pharm.D., Ph.D.; Eike Reich, Ph.D.; Paul Schiff, Ph.D.; Shangmei Shi, B.Sc.

Herbal Medicines Compendium (HMC) East Asia Expert Panel
DE-AN GUO, PH.D., *Chair*
Yuan-shiun Chang, Ph.D.; ShiLin Chen, Ph.D.; Takashi Hakamatsuka, Ph.D.; Shen Ji, Ph.D.; Yeong Shik Kim, Ph.D.; Hwee-Ling Koh, Ph.D.; Clara Bik San Lau, Ph.D; Ping Li, Ph.D.; Qing Li, Ph.D.; Shuangcheng Ma, Ph.D.; Shangmei Shi; Viet Hung Tran, Ph.D.; Pengfei Tu, Ph.D.; Wanying Wu, Ph.D.; Zhongzhen Zhao, Ph.D.

Herbal Medicines Compendium (HMC) South Asia Expert Panel
SUKHDEV S. HANDA, PH.D., FNAIM, FNA.SC, *Chair*
Amit Agarwal, Ph.D.; Rasadah Mat Ali, Ph.D.; Mohamed Zahir Mohammed Farhad; C.K. Katiyar, Ph.D.; Ami Fazlin Syed Mohamed, Ph.D.; A. Nagarajan, Ph.D.; D.G. Naik, Ph.D.; Sankaran Natarajan, Ph.D.; M.K. Raina, Ph.D.; J.L.N. Sastry, Ph.D.; Rajeev Kr. Sharma, Ph.D.; R. Sundaram, Ph.D.; Neeraj Tandon, Ph.D.; Surapote Wongyai, Ph.D.

Dietary Supplements Safety Modeling
MARY L. HARDY, M.D., *Chair*
V.A. Shiva Ayyadurai, Ph.D.; Mary A. Fox, Ph.D., MPH; Scott A. Jordan, Ph.D.; Mkaya Mwamburi, M.D., Ph.D., MA (Econ); Diane R. Mould, Ph.D.; Robert E. Osterberg, R.Ph., Ph.D., Fellow-ATS; Charlie Yoe, Ph.D.

Non-Botanical Dietary Supplements
DENNIS K. J. GORECKI, B.S.P., PH.D., *Chair*
Joseph Betz, Ph.D.; Michael Bradley, M.S.; James Brooks, Ph.D.; Bill Gurley, Ph.D.; Chung Hyun, M.S.; Joy Joseph, M.S.; Raimar Löbenberg, Ph.D.; Richard Myers, Ph.D.; James Neal-Kababick, B.Sc.; Peter Rice, Pharm.D., Ph.D.; Amy Roe, Ph.D.; Fabio Soldati, Ph.D.; Aniko Solyom, Ph.D.; Karunakar Sukuru, Ph.D.; Darryl Sullivan, Ph.D.; Edward Waysek, Ph.D.

⟨2251⟩ Adulteration of Dietary Supplements with Drugs and Drug Analogs Expert Panel
DENNIS K. J. GORECKI, B.S.P., PH.D., *Chair*
Joseph M. Betz, Ph.D.; Pei Chen, Ph.D.; Hans Geyer, Ph.D.; Jana B. Hildreth, B.A.; Hwee-Ling Koh, Ph.D.; Ikhlas A. Khan, Ph.D.; Cynthia L. Morris-Kukoski, Pharm.D., DABAT, FAACT; James Neal-Kababick, B.Sc.; Olivier Rabin, Ph.D.; John Spink, Ph.D.; Darryl Sullivan, Ph.D.; Nicole Vu, Ph.D.; Kate Yu, Ph.D.

Extended-Release Dietary Supplements Expert Panel
JOY A. JOSEPH, M.S., *Chair*
Charles Barton, Ph.D., DABT; Joseph F. Borzelleca, Ph.D.; Michael S. Bradley, M.S.; James R. Brooks, Ph.D.; Marion Ehrich, Ph.D.; Vivian A. Gray, B.S.;

afroozpharma@yahoo.com

Carol Johnston, Ph.D., RD; Raimar Löbenberg, Ph.D.; Alexander G. Schauss, Ph.D., FACN; Elizabeth A. Yetley, Ph.D.

Expert Committees for the *Food Chemicals Codex*

Food Ingredients
JONATHAN W. DEVRIES, PH.D., *Chair*
Janet Balson, M.S.; Richard C. Cantrill, Ph.D.; Junshi Chen, M.D.; Hwei-Fang Cheng, Ph.D.; Henry Chin, Ph.D.; Grady Chism, Ph.D.; Robin Churchill, Ph.D.; Roger Clemens, DrPH; John Clos, Ph.D.; Helen Darling, Ph.D.; Andrew Ebert, Ph.D.; Jaap Evers, Ph.D.; Carl Frey, M.S.; Einat Haleva, Ph.D.; Lori Klopf, Ph.D.; Hemant G. Koshia, Ph.D.; Dana Krueger, B.Sc.; Diane McColl, J.D.; Bert Popping, Ph.D.; Yoko Uematsu, Ph.D.; Yongning Wu, Ph.D.; Liangli Yu, Ph.D.

Food Adulteration Expert Panel
HENRY CHIN, PH.D., *Chair*
Grant Abernethy, Ph.D.; David Bolliet; Richard C. Cantrill, Ph.D.; Christophe Cavin, Ph.D.; Robin Churchill, Ph.D.; Helen Darling, Ph.D.; Jonathan W. DeVries, Ph.D.; Andrew Ebert, Ph.D.; Kim Huynh-Ba, M.S.; Shaun Kennedy; Dana Krueger, B.Sc.; Michele Lees, Ph.D.; Bert Popping, Ph.D.; Lars Reimann, M.S.; Roman Romero, Ph.D.; Thomas Tarantelli, B.Sc.; Yoko Uematsu, Ph.D.; Saskia van Ruth, Ph.D.; Carl Winter, Ph.D.; Yongning Wu, Ph.D.

Food Adulterants Hazard Identification Expert Panel
HENRY CHIN, PH.D., *Chair*
Andrew Ebert, Ph.D.; Richard Lane, Ph.D.; Diane McColl, J.D.; Bert Popping, Ph.D.; Joseph Scimeca; Carl Winter, Ph.D.

Non-Targeted Methods for Milk Ingredients Expert Panel
ROBERT MAGALETTA, PH.D., *Chair*
Sned Bhandari, Ph.D.; Jonathan W. DeVries, Ph.D.; Gerard Downey, Ph.D.; Stephen Ellison, Ph.D.; James M. Harnly, Ph.D.; Steven Holroyd, Ph.D.; Gregory A. Israelson, B.Sc.; Joseph Katzenmeyer, Ph.D.; Moon S. Kim, Ph.D.; Andrew Mackey, Ph.D.; Benjamin B. Perston, Ph.D.; Jianwei Qin, Ph.D.; Roman Romero, Ph.D.; Paul Wehling; Steven Zbylut, Ph.D.

Olive Oil Authenticity and Quality Expert Panel
RICHARD C. CANTRILL, PH.D., *Chair*
Diego Luis Garcia-Gonzalez, Ph.D.; Claudia Guillaume, M.Sc.; Zohar Kerem, Ph.D.; Paul H. Miller, B.A.; Agusti Jordi Romero, Ph.D.; Selina Wang, Ph.D.

Expert Committees for the *USP* and *USP on Compounding*

Compounding
GIGI S. DAVIDSON, B.S.PHARM., DICVP, *Chair*
Lisa Ashworth, B.S.Pharm., R.Ph.; Gus Bassani, Pharm.D.; Ruth Ebiasah, Pharm.D., M.S.; Edmund J. Elder, Jr., Ph.D.; Ryan Forrey, Pharm.D., M.S.; Deborah Houston, Pharm.D.; Brenda Jensen, M.A.; Patricia C. Kienle, M.P.A.; William A. Mixon, M.S.; John Musil, Pharm.D.; David Newton, Ph.D.; Alan Parr, Pharm.D., Ph.D.; Abby Roth; Robert Shrewsbury, Ph.D.; Connie Rae Sullivan, B.S. Pharm.; James T. Wagner; Brenda Yuzdepski, B.S. Pharm.

Compounding with Hazardous Drugs Expert Panel
PATRICIA C. KIENLE, M.P.A., *Chair*
Thomas H. Connor, Ph.D.; Eric Kastango, M.B.A., B.S. Pharm.; Melissa A. McDiarmid, M.D., MPH; Kenneth R. Mead, Ph.D.; Martha Polovich, Ph.D.; Lucille A. Power; James T. Wagner

Government Liaisons to Expert Committees and Expert Panels

United States Food and Drug Administration (FDA) Liaisons
Eileen Abt, Ph.D.; Rajiv Agarwal, Ph.D.; Mohammed Ahmed, M.S.; Ali Al-Hakim, Ph.D.; Om Anand, Ph.D.; Jane Axelrad, J.D.; Matthew Barlow, RN, BSN; Eden Bermingham, DVM, MS, DACVCP; Jonathan Bray, B.S.; Michael Brent; Michael Brewer, Ph.D.; Daniel Brown, Lucinda Buhse, Ph.D.; Teresa Cain, Ph.D.; Steven Casper, Ph.D.; Wiley Chambers, M.D.; Jane Chang, Ph.D.; Richard Chang, Ph.D.; Anissa Cheung, Ph.D.; Donna Christner, Ph.D.; John Cipollo, Ph.D.; David Claffey, Ph.D.; Mike Darj, Ph.D.; Swapan De, Ph.D.; Ian DeVeau, Ph.D.; Michelle Dillahunt, Ph.D.; Shulin Ding, Ph.D.; Zedong Dong, Ph.D.; Jinhui Dou, Ph.D.; Jason Dreabit, M.A.; Okponanabofa Eradiri, Ph.D.; Cory Evans, Ph.D.; Raafat Fahmy, Ph.D.; Daniel Folmer, Ph.D.; Rick Friedman, M.S.; Michael Furness, M.S.; Zongming Gao, Ph.D.; Mohamed Ghorab, Ph.D.; Tapash Ghosh, Ph.D.; Devinder Gill, Ph.D.; Gurpreet Gill-Sangha, Ph.D.; Lillie Golson, Pharm.D.; Edisa Gozun, Pharm.D.; Damon Green, M.D.; Yin Guo, Ph.D.; Linan Ha, Ph.D.; William Hallett, Ph.D.; Blake Hamann, Ph.D.; Bruce Harris, Ph.D.; Danielle Marie Harris, Pharm.D.; William Hess, B.S. Pharm; Hank Hoang, Ph.D.; Gloria Huang, Ph.D.; Laura Huffman, M.S.; Gregory Hunter, Ph.D.; Latiff Hussain, Ph.D.; Mai Huynh, Ph.D.; Robert Iser, M.S.; Joseph E. Jablonski, Ph.D.; Young Jhon; Ravindra Kasliwal, Ph.D.; John Kauffman, Ph.D.; David Keire, Ph.D.; Michael Kennedy, Ph.D.; James Kenney, Ph.D.; Andrea Kerrigan, M.S.; Saeed Khan, Ph.D.; Erin Kim, Ph.D.; Kathryn E. King, Ph.D.; Donald Klein, Ph.D.; Bogdan Kurtyka, Ph.D.; Stephen Langille, Ph.D.; David Lau, M.A.; Hyoung S Lee, Ph.D.; Sau Lee, Ph.D.; Xihao Li; Jennifer Liang, Ph.D.; Tsai-Lien Lin, Ph.D.; Heather Lombardi, Ph.D.; Ewa Marszal, Ph.D.; Marilyn Martinez, Ph.D.; Timothy McGovern, Ph.D.; Jeffrey Medwid, Ph.D.; Randa Melhem, Ph.D.; John Metcalfe, Ph.D.; Yana Mille, B.S. Pharm; Amit Mitra, Ph.D.; Magdi Mossoba, Ph.D.; Laura Moussa, Ph.D.; Karunakar Neelam, Ph.D.; Pallavi Nithyanandan, Ph.D.; Rachel Novak, Ph.D.; Steven Oh, Ph.D.; Frank Perrella, Ph.D.; Erika Pfeiler, Ph.D.; Laura Pogue, Ph.D.; Zhihao Peter Qiu, Ph.D.; Ziyaur Rahman, Ph.D.; Radhika Rajagopalan, Ph.D.; Muthukumar Ramaswamy, Ph.D.; Sam G. Raney, Ph.D.; Ashutosh Rao, Ph.D.; Andre Raw, Ph.D.; Shahnaz Read, Ph.D.; Bhagwant Rege, Ph.D.; James Rice, Ph.D.; Jason Rodriguez, Ph.D.; Sara Rothman; Allen Rudman, Ph.D.; R.D. Satzger, Ph.D.; Zuben Erach Sauna, Ph.D.; Peter Scholl; Suzanne Sechen, Ph.D.; Hamid Shafiei, Ph.D.; Rakhi Shah, Ph.D.; Balajee Shanmugam, Ph.D.; Xiaobin Shen, Ph.D.; Akhtar Siddiqui, Ph.D.; Mark Skasko, Ph.D.; Fenhong Song, Ph.D.; Jannavi Srinivasan, Ph.D.; Benjamin Stevens, M.P.H.; Marla Stevens-Riley, Ph.D.; Yichun Sun, Ph.D.; Zhigang Sun, Ph.D.; Jennifer Swisher, Ph.D.; Frank Switzer, Ph.D.; Neeru Takiar, M.S.; Jennifer Thomas, Ph.D.; Yiying Tsai, Pharm.D.; Saleh Turujman, Ph.D.; Katherine Tyner, Ph.D.; Alex Viehmann, Ph.D.; John Whyte, Ph.D.; Steve Wolfgang, Ph.D.; Bingyuan Wu, Ph.D.; Geoffrey Wu, Ph.D.; Larisa Wu, Ph.D.; Jo Wyeth, Pharm.D.; Xiaoming Xu, Ph.D.; Betsy Jean Yakes, Ph.D.; Jingyue Yang, Ph.D.; Sri Rama Krishnaiah Yellela, Ph.D.; Xavier Ysern, Ph.D.; Jin Zhang, Ph.D.; Yuda Zong, Ph.D.

Front Matter

afroozpharma@yahoo.com

Other Government Liaisons

Agency for Healthcare Research and Quality
Diane D. Cousins, RPh

U.S. Centers for Disease Control and Prevention
Nadine Shehab, Pharm.D., M.P.H.; Melissa Schaefer, M.D.

Health Canada
Victoria Kyeyune, Ph.D.; Jessica Priem, M.S.

In Memoriam

USP would like to acknowledge the following Expert Volunteers and Government Liaisons who have passed away during the 2015–2020 Cycle:
Scott V.W. Sutton, Ph.D. (General Chapters—Microbiology Expert Committee)

afroozpharma@yahoo.com

Members and Delegates of the United States Pharmacopeial Convention as of May 31, 2016

Academic Institutions and Associations Thereof—Academic Associations

American Association of Colleges of Nursing, Ginette A. Pepper, Ph.D.
American Association of Colleges of Osteopathic Medicine, Anthony J. Silvagni, D.O., Pharm.D., M.Sc., FACOFP, FAFPE
American Association of Colleges of Pharmacy, Lucinda L. Maine, Ph.D., R.Ph.
Association of American Medical Colleges, David W. Nierenberg, M.D.
Association of American Veterinary Medical Colleges, Dawn M. Boothe, D.V.M., Ph.D., M.S.
Association of Faculties of Pharmacy of Canada, Raimar Löebenberg, Ph.D.

Academic Institutions and Associations Thereof—Colleges and Schools of Medicine

Baylor College of Medicine, Lynn C. Yeoman, Ph.D.
Boston University School of Medicine, Carol T. Walsh, Ph.D.
Brody School of Medicine at East Carolina University, Abdel A. Abdel-Rahman, Ph.D., FAHA
Case Western Reserve University School of Medicine, Walter B. Geho, M.D., Ph.D.
Chicago Medical School at Rosalind Franklin University of Medicine and Science, Ann K. Snyder, Ph.D.
Columbia University College of Physicians and Surgeons, Rudina Odeh-Ramadan, Pharm.D.
Creighton University School of Medicine, Peter W. Abel, Ph.D.
Duke University School of Medicine, Sharon L. Ellison, Pharm.D.
East Tennessee State University James H. Quillen College of Medicine, Kenneth E. Ferslew, Ph.D.
Eastern Virginia Medical School, Senthil Kumar Rajasekaran, M.D.
Florida State University College of Medicine, Graham A. Patrick, Ph.D.
Geisel School of Medicine at Dartmouth, Lionel D. Lewis, M.D.
Georgetown University School of Medicine, Thomas G. Sherman, Ph.D.
Howard University College of Medicine, Robert E. Taylor, M.D., Ph.D., FACP
Indiana University School of Medicine, David R. Jones, Ph.D.
Joan C. Edwards School of Medicine Marshall University, Gary O. Rankin, Ph.D.
Johns Hopkins University School of Medicine, Daniel M. Ashby, M.S., FASHP
Keck School of Medicine of University of Southern California, Paul D. Holtom, M.D.
Loma Linda University School of Medicine, John N. Buchholz, Ph.D.
Louisiana State University School of Medicine, Kurt J. Varner, Ph.D.
Louisiana State University School of Medicine at Shreveport, Henry R. McKnight, B.S., M.S., Pharm.D.
Loyola University Chicago Stritch School of Medicine, Jawed Fareed, Ph.D.
Mayo Medical School, Peter J. Post, Pharm.D., R.Ph.
Medical University of South Carolina College of Medicine, Kenneth D. Tew, Ph.D.
Meharry Medical College School of Medicine, Clivel G. Charlton, Ph.D.
Mercer University School of Medicine, Wayne Glasgow, Ph.D.
Michigan State University College of Human Medicine, Rami B. Ibrahim, M.Sc., Pharm.D., BCPS, BCOP
Morehouse School of Medicine, Ward Kirlin, Ph.D.
Mount Sinai School of Medicine, Joel S. Mindel, M.D., Ph.D.
New York Medical College, Mario A. Inchiosa, Ph.D.
New York University School of Medicine, Lewis S. Nelson, M.D.
Northeast Ohio Medical University College of Medicine, Werner Geldenhuys, Ph.D.
Northwestern University Feinberg School of Medicine, Steven M. Belknap, M.D.
Ohio State University College of Medicine, Robert J. Weber, Pharm.D., M.S.
Pennsylvania State University College of Medicine, Kelly D. Karpa, Ph.D., R.Ph.
Rutgers, the State University of New Jersey, New Jersey Medical School, Deborah Lazzarino, Ph.D.
Rutgers, the State University of New Jersey, Robert Wood Johnson Medical School, Susan Goodin, Pharm.D., FCCP, BCOP
Saint Louis University School of Medicine, Heather Macarthur, Ph.D., B.Sc.
San Juan Bautista School of Medicine, Marielis E. Rivera Ruiz, Ph.D.
Sidney Kimmel Medical College at Thomas Jefferson University, Walter Kraft, M.D., M.S., FACP
Southern Illinois University School of Medicine, Carl Faingold, Ph.D.
SUNY at Buffalo School of Medicine and Biomedical Sciences, Paul J. Kostyniak, Ph.D., DABT
SUNY Downstate Medical Center College of Medicine, Jacob V. Aranda, M.D., Ph.D., FRCPC
SUNY Upstate Medical University, David F. Lehmann, M.D., Pharm.D.
Temple University School of Medicine, Alan Cowan, Ph.D.
Texas A&M Health Science Center College of Medicine, D. Samba Reddy, Ph.D., R.Ph.
The Warren Alpert Medical School of Brown University, Wayne D. Bowen, Ph.D.

afroozpharma@yahoo.com

Tufts University School of Medicine, Ross W. Thompson, M.S., R.Ph.
Tulane University School of Medicine, David W. Busija, Ph.D., M.D. (Hon.)
Uniformed Services University of the Health Sciences, Louis R. Cantilena, M.D., Ph.D.
Universidad Central del Caribe School of Medicine, Harry Mercado, M.D.
University of Alabama at Birmingham School of Medicine, Richard J. Whitley, M.D.
University of Arizona College of Medicine, Hillary A. Franke, M.D., M.S.
University of Arkansas for Medical Sciences College of Medicine, Paul L. Prather, Ph.D., B.S.
University of California Davis School of Medicine, Timothy E. Albertson, M.D., M.P.H., Ph.D.
University of California San Francisco School of Medicine, Linda L. Liu, M.D.
University of Chicago Pritzker School of Medicine, Michael L. Maitland, M.D., Ph.D.
University of Cincinnati College of Medicine, Marianne F. Ivey, Pharm.D., M.P.H., FASHP
University of Connecticut Health Center School of Medicine, Kimberly J. Metcalf, Pharm.D.
University of Hawaii John A. Burns School of Medicine, Robert A. Nichols, Ph.D.
University of Illinois College of Medicine at Chicago, Randal A. Skidgel, Ph.D.
University of Iowa Carver College of Medicine, Donald E. Letendre, Pharm.D.
University of Kansas School of Medicine, Sam J. Enna, Ph.D.
University of Kentucky College of Medicine, Lisa A. Cassis, Ph.D.
University of Louisville School of Medicine, Demetra Antimisiaris, Pharm.D., CGP, FASCP
University of Maryland School of Medicine, Margaret M. McCarthy, Ph.D.
University of Massachusetts Medical School, Roy Guharoy, Pharm.D., M.B.A., FCP, FCC, FASHP
University of Miami Miller School of Medicine, Joshua D. Lenchus, D.O., R.Ph., FACP
University of Michigan Medical School, Paul F. Hollenberg, Ph.D.
University of Mississippi School of Medicine, Deborah S. Minor, Pharm.D., FAHA
University of Missouri–Kansas City School of Medicine, James M. Wooten, Pharm.D.
University of Nebraska College of Medicine, L. Charles Murrin, Ph.D.
University of Nevada School of Medicine, Iain L. Buxton, Pharm.D.
University of New Mexico Health Sciences Center School of Medicine, Arti Prasad, M.D.
University of North Dakota School of Medicine and Health Sciences, James E. Porter, Ph.D.
University of Oklahoma College of Medicine, Pramod K. Chetty, M.D.
University of Pennsylvania School of Medicine, Patrick J. Brennan, M.D.
University of Pittsburgh School of Medicine, Dennis P. Swanson, M.S.
University of Puerto Rico School of Medicine, Miguel A. Marrero, M.D.
University of South Alabama College of Medicine, Jack A. DiPalma, B.S., M.D.
University of South Carolina School of Medicine, Kenneth B. Walsh, Ph.D.
University of South Florida Morsani College of Medicine, Shufeng Zhou, M.D., Ph.D.
University of Tennessee, Memphis College of Medicine, Trevor W. Sweatman, Ph.D.
University of Texas Medical School at Houston, Gary C. Rosenfeld, Ph.D.
University of Utah School of Medicine, Richard J. Sperry, M.D., Ph.D.
University of Virginia School of Medicine, Robert J. Meyer, M.D.
University of Washington School of Medicine, Suzanne M. Allen, M.D., M.P.H.
University of Wisconsin School of Medicine and Public Health, F. Michael Hoffmann, Ph.D.
Vanderbilt University School of Medicine, C. Michael Stein, M.D.
Virginia Commonwealth University School of Medicine, Dominic A. Sica, M.D.
Wake Forest University School of Medicine, Kathy P. Bricker, Pharm.D., BCPS
Washington University School of Medicine in St. Louis, Evan D. Kharasch, M.D., Ph.D.
Wayne State University School of Medicine, Stephen A. Lerner, M.D.
Wright State University Boonshoft School of Medicine, Khalid M. Elased, Ph.D., R.Ph.
Yale University School of Medicine, Seth Powsner, M.D.

Academic Institutions and Associations Thereof—Colleges and Schools of Pharmacy

Auburn University Harrison School of Pharmacy, William R. Ravis, Ph.D.
Butler University College of Pharmacy and Health Sciences, Sudip K. Das, Ph.D.
Campbell University School of Pharmacy, Antoine Al-Achi, M.S.Pharm., Ph.D., M.S.
Chicago State University College of Pharmacy, Duc P. Do, Ph.D.
Creighton University School of Pharmacy and Health Professions, J. Christopher Bradberry, Pharm.D.
Drake University College of Pharmacy and Health Sciences, Abebe E. Mengesha, Ph.D.
Duquesne University Mylan School of Pharmacy, Ira S. Buckner, Ph.D.
Ernest Mario School of Pharmacy at Rutgers University, Longqin Hu, Ph.D.
Ferris State University College of Pharmacy, Kim E. Hancock, Ph.D.
Florida A & M University College of Pharmacy and Pharmaceutical Sciences, Mandip Sachdeva, Ph.D.
Hampton University School of Pharmacy, Chengan Du, Ph.D., M.P.H.
Howard University College of Pharmacy, Nursing and Allied Health Sciences, Emmanuel O. Akala, Ph.D.
Idaho State University College of Pharmacy, Kevin W. Cleveland, Pharm.D.
Lake Erie College of Osteopathic Medicine School of Pharmacy, Sachin S. Devi, B.Pharm., Ph.D.
Loma Linda University School of Pharmacy, W. William Hughes, Ph.D.
Long Island University Arnold and Marie Schwartz College of Pharmacy and Health Sciences, David R. Taft, B.S.Pharm., Ph.D.
Massachusetts College of Pharmacy and Health Sciences—Boston, David A. Williams, Ph.D.
Massachusetts College of Pharmacy and Health Sciences School of Pharmacy—Worcester, Robert Campbell, Ph.D., M.S.
Mercer University College of Pharmacy and Health Sciences, J. Grady Strom, Ph.D.
Midwestern University Chicago College of Pharmacy, Anna Kabakov, Pharm.D.
Midwestern University College of Pharmacy—Glendale, Bill J. Bowman, Ph.D., R.Ph.
North Dakota State University College of Pharmacy, Nursing and Allied Sciences, Jagdish Singh, Ph.D.
Northeastern University Bouve College of Health Sciences School of Pharmacy, Mansoor M. Amiji, Ph.D.
NOVA Southeastern University College of Pharmacy, Hamid H. Omidian, Ph.D., M.Sc., B.Sc.

afroozpharma@yahoo.com

Ohio Northern University Raabe College of Pharmacy, Jenelle L. Sobotka, Pharm.D.
Oregon State University College of Pharmacy, J. Mark Christensen, Ph.D.
Pacific University College of Health Professions School of Pharmacy, Susan M. Stein, R.Ph., M.S.
Palm Beach Atlantic University Gregory School of Pharmacy, Adwoa O. Nornoo, B.Pharm., M.S., Ph.D.
Purdue University School of Pharmacy and Pharmaceutical Sciences, Stephen R. Byrn, Ph.D.
Roseman University of Health Sciences College of Pharmacy, Mark C. Decerbo, Pharm.D., BCPS, BCNSP
Samford University McWhorter School of Pharmacy, John J. Arnold, Ph.D., B.S.
Shenandoah University Bernard J. Dunn School of Pharmacy, Nina Hengen, M.D., Ph.D.
South Carolina College of Pharmacy, James J. Sterrett, Pharm.D., BCPS
South Dakota State University College of Pharmacy, David L. Helgeland, B.S.Pharm., M.B.A., Ed.D.
South University School of Pharmacy, S. Craig Dyar, Ph.D.
Southern Illinois University Edwardsville School of Pharmacy, William M. Kolling, Ph.D.
Southwestern Oklahoma State University School of Pharmacy, Shelly Stockton, Ph.D.
St. John's University College of Pharmacy and Allied Health Professions, Abu Serajuddin, Ph.D.
St. Louis College of Pharmacy, John Pieper, Pharm.D.
SUNY at Buffalo School of Pharmacy and Pharmaceutical Sciences, Alfred T. Reiman, R.Ph.
Temple University School of Pharmacy, Michael Borenstein, Ph.D.
Texas Southern University College of Pharmacy and Health Sciences, Dong Liang, Ph.D.
Texas Tech University Health Sciences Center School of Pharmacy, Arthur A. Nelson, Ph.D., R.Ph.
The Ohio State University College of Pharmacy, Robert W. Brueggemeier, Ph.D.
The University of Arizona College of Pharmacy, Michael Mayersohn, Ph.D.
The University of Iowa College of Pharmacy, Mickey L. Wells, Ph.D.
The University of Louisiana at Monroe College of Pharmacy, Sami M. Nazzal, Ph.D.
The University of North Carolina at Chapel Hill Eshelman School of Pharmacy, Dennis M. Williams, Pharm.D.
The University of Texas at Austin College of Pharmacy, Janet C. Walkow, Ph.D.
The University of Toledo College of Pharmacy, Kenneth S. Alexander, R.Ph., Ph.D.
Touro University California College of Pharmacy, Alison McCormick, Ph.D.
University of Arkansas for Medical Sciences College of Pharmacy, Melanie Reinhardt, Pharm.D.
University of California San Diego Skaggs School of Pharmacy and Pharmaceutical Sciences, Grace M. Kuo, Pharm.D., Ph.D., M.P.H.
University of California San Francisco School of Pharmacy, Leslie Z. Benet, Ph.D.
University of Cincinnati James L. Winkle College of Pharmacy, Pankaj B. Desai, Ph.D.
University of Colorado Skaggs School of Pharmacy, Peter J. Rice, Pharm.D., Ph.D.
University of Connecticut School of Pharmacy, Peter J. Tyczkowski, R.Ph., M.B.A.
University of Florida College of Pharmacy, Rhonda Cooper-DeHoff, Pharm.D., M.S., FAHA
University of Georgia College of Pharmacy, Gurvinder Singh Rekhi, Ph.D., M.S.
University of Houston College of Pharmacy, F. Lamar Pritchard, Ph.D.
University of Illinois at Chicago College of Pharmacy, Stephanie Y. Crawford, Ph.D., M.P.H.
University of Kansas School of Pharmacy, Christian Schoneich, Ph.D.
University of Kentucky College of Pharmacy, Eric J. Munson, Ph.D.
University of Maryland School of Pharmacy, Natalie D. Eddington, Ph.D.
University of Michigan College of Pharmacy, Gregory E. Amidon, B.S., Ph.D.
University of Minnesota College of Pharmacy, Marilyn K. Speedie, Ph.D.
University of Mississippi School of Pharmacy, Michael A. Repka, D.D.S., Ph.D.
University of Missouri–Kansas City School of Pharmacy, Cydney E. McQueen, Pharm.D.
University of Nebraska Medical Center College of Pharmacy, Michael F. Powell, B.S. Pharm., M.S.
University of New Mexico College of Pharmacy, Lynda S. Welage, B.S., Pharm.D.
University of Oklahoma College of Pharmacy, Vibhudutta Awasthi, Ph.D., M.Pharm.
University of Pittsburgh School of Pharmacy, Michael A. Zemaitis, Ph.D.
University of Rhode Island College of Pharmacy, David R. Worthen, Ph.D., J.D.
University of São Paulo College of Pharmacy, Prof. Terezinha de Jesus Andreoli Pinto
University of Southern California School of Pharmacy, Stan G. Louie, Pharm.D.
University of Tennessee Health Science Center College of Pharmacy, Laura A. Thoma, Pharm.D., B.S.
University of the Pacific Thomas J. Long School of Pharmacy and Health Sciences, Xiaoling Li, Ph.D.
University of the Sciences in Philadelphia, Philadelphia College of Pharmacy, Daniel A. Hussar, Ph.D.
University of Utah College of Pharmacy, John W. Mauger, Ph.D.
University of Washington School of Pharmacy, Thomas K. Hazlet, Pharm.D., Dr.P.H.
University of Wisconsin–Madison School of Pharmacy, James E. DeMuth, Ph.D., R.Ph.
University of Wyoming School of Pharmacy, Kurt Dolence, Ph.D.
Virginia Commonwealth University/Medical College of Virginia School of Pharmacy, Phillip M. Gerk, Pharm.D., Ph.D.
Washington State University College of Pharmacy, Danial E. Baker, Pharm.D., FASHP, FASCP
Wayne State University Eugene Applebaum College of Pharmacy and Health Sciences, Sheila M. Wilhelm, Pharm.D.
West Virginia University School of Pharmacy, Arthur I. Jacknowitz, Pharm.D.
Western University of Health Sciences College of Pharmacy, Sunil Prabhu, Pharm.D., R.Ph.
Wilkes University Nesbitt School of Pharmacy, Harvey A. Jacobs, Ph.D.
Xavier University of Louisiana College of Pharmacy, Tarun K. Mandal, Ph.D.

Academic Institutions and Associations Thereof—Colleges and Schools of Osteopathic Medicine

NOVA Southeastern University College of Osteopathic Medicine, Nicole Cook, Ph.D., M.P.H.

Consumer and Other Organizations Representing the Public Interest

AARP, Leigh Purvis
Alzheimer's Association, William Thies, Ph.D.

afroozpharma@yahoo.com

American Autoimmune Related Diseases Association, Virginia T. Ladd, R.T.
American Cancer Society, Mark Clanton, M.D., M.P.H.
American Diabetes Association, Jane L. Chiang, M.D.
American Health Quality Association, Kenneth Mishler, R.Ph., Pharm.D.
American Heart Association, Robert Lee Page II, Pharm.D., M.S.P.H., FCCP, FAHA, FASHP, FASCP, BCPS, CGP
Arthritis Foundation, John H. Klippel, M.D.
Center for Science in the Public Interest, David G. Schardt, M.S.
Consumers Union, Lisa L. Gill, B.A.
ECRI Institute, Jeffrey C. Lerner, Ph.D.
Institute for Safe Medication Practices, Michael R. Cohen, R.Ph., M.S., Sc.D., FASHP
National Consumers League, Karin Bolte, J.D.
National Council on Patient Information and Education, William R. Bullman, M.A.M.
National Osteoporosis Foundation, Amy Porter
William J. Clinton Foundation, Rodger W. Stringham, Ph.D.

Governmental Bodies or Divisions or Associations Thereof

Agency for Healthcare Research and Quality, Scott R. Smith, Ph.D.
Argentine Pharmacopoeia, Héctor A. Giuliani, Pharm.D.
Association of Food and Drug Officials, Cynthia T. Culmo
Brazilian Pharmacopoeia Commission, Mônica da Luz Carvalho Soares
Brazil's National Institute of Quality Control in Health, Filipe Soares Quirino Silva, Ph.D.
British Pharmacopoeia Commission, James Pound
Centers for Disease Control and Prevention, Cindy P. Dougherty, Pharm.D.
Centers for Medicare & Medicaid Services, Jeffrey A. Kelman, M.D.
China National Center for Food Safety Risk Assessment, Junshi Chen, M.D.
Chinese Pharmacopoeia Commission, Zhang Wei
Department of Veterans Affairs Veterans Health Administration, Timothy J. Stroup, R.Ph.
European Directorate for the Quality of Medicines and HealthCare, Susanne Keitel
FDA Center for Biologics Evaluation and Research, John G. Bishop III, Ph.D.
FDA Center for Devices and Radiological Health, Marilyn M. Lightfoote, M.D., Ph.D.
FDA Center for Drug Evaluation and Research, Pallavi Nithyanandan, Ph.D.
FDA Center for Food Safety and Applied Nutrition, Daniel E. Folmer, Ph.D.
FDA Center for Veterinary Medicine, Janis R. Messenheimer, D.V.M.
Federal Commission for Protection Against Sanitary Risks, Rocio del Carmen Alatorre Eden-Wynter, M.C.
Federal Service on Surveillance in Healthcare of Russian Federation, Valentina F. Kosenko, Ph.D., Pharm.
Food and Drugs Authority, Ghana, Eric Karikari-Boateng, M.S.
Food, Medicine and Health Care Administration and Control Authority of Ethiopia, Yehulu Denekew Alamneh, B.Sc., M.A.
General Directorate of Medicines, Supplies and Drugs, Laura Cerón, Pharm.D.
Health Canada, Karen Reynolds
Health Canada, Food Directorate, Barbara Lee
Health Canada, Natural and Non-prescription Health Products Directorate, Jeannine R. Ritchot
Indian Pharmacopoeia Commission, G.N. Singh, Ph.D., M.Pharm.
Indonesian Pharmacopoeia Commission, Augustine Zaini, M.S.
International Trade Administration—U.S. Department of Commerce, James D. Rice, B.A., M.A.
Japan's Ministry of Health Labour and Welfare, Pharmaceuticals and Medical Devices Agency, Nobuo Uemura
Jordan Food and Drug Administration, Dr. Lubna R. Qusous
Ministry of Food and Drug Safety, Dr. Jin-Ho Wang
Ministry of Health of the Republic of Belarus, Liudmila Reutskaya, Pharm.D.
Ministry of Health of the Republic of Uzbekistan, Mirzohidjon Kodirov, Ph.D.
Ministry of Health of Turkey, Filiz Bütev Koç, Ph.D.
Morocco's Directorate of Medicines and Pharmacy, Laila Hakkou
National Agency for Food and Drug Administration and Control, Dr. Monica H. Eimunjeze
National Association of Boards of Pharmacy, Elizabeth Scott Russell, B.S.Pharm.
National Center for Quality Control, Ofelia del Rosario Villalva Rojas, Q.F.
National Centre for Expertise of Drugs, Medical Products and Medical Equipment, Ardak U. Tulegenova, Ph.D.
National Drug Authority of Uganda, Gordon Katende Sematiko
National Health Surveillance Agency, Lais Santana Dantas, B.S.
National Institute for Biological Standards and Control, Adrian F. Bristow, Ph.D.
National Institute of Drug and Food Surveillance, Eduardo Vergel Bayona
National Institute of Metrology, Quality and Technology, Valnei Smarçaro da Cunha, Ph.D.
National Institute of Standards and Technology, Michael J. Tarlov, Ph.D.
National Institutes for Food and Drug Control, Bo Li, Ph.D.
National Institutes of Health, Robert DeChristoforo, R.Ph., M.S., FASHP
Permanent Commission of the Pharmacopoeia of the United Mexican States, Maria del Carmen Becerril-Martinez
Pharmacopoeia of Chinese Taipei, Jaw-Jou Kang, Ph.D.
Pharmacy Council of India, Bhojraj Suresh, M.Pharm., Ph.D., D.Sc.
Philippine Pharmacopeia, Maria Lourdes C. Santiago, B.S.Pharm., M.S.Pharm.
Saudi Food and Drug Authority, Abdullah S. Alhomoud, M.S.
State Administration of Ukraine on Medicinal Products, Andrii V. Shovkovyi
Tanzania Food and Drugs Authority, Yonah Hebron Mwalwisi, M.Sc., B.Pharm.
Thai Pharmacopoeia Committee, Kornvika Charupant, Ph.D.
The Pharmacy Board of Sierra Leone, Wiltshire C.N. Johnson, B.Pharm. (Hons.) University of Sierra Leone, M.Sc (Brad UK), MPSSL, FPCPharm
Therapeutic Goods Administration of Australia, Vivienne Christ, B.App.Sc., MASM
Ukrainian Scientific Pharmacopoeial Center for Quality of Medicines, Oleksandr I. Gryzodub, Ph.D.
United States Agency for International Development, Anthony F. Boni
United States Air Force–Office of the Surgeon General, Deborah Myers, R.Ph., M.B.A.
United States Army–Office of the Surgeon General, John Spain, Pharm.D., BCPS
United States Department of Health and Human Services, Donald Wright, M.D., M.P.H.
United States Navy Bureau of Medicine and Surgery–Office of the Surgeon General, Thinh V. Ha, Pharm.D., M.B.A., M.S.
United States Public Health Service–Office of the Surgeon General, Christina H. Lee, Pharm.D.
Vietnamese Pharmacopoeia Commission, Luc Thi Thu Hang, Ph.D.

afroozpharma@yahoo.com

Other Health Practitioner, Professional and Scientific Associations

AACC International, Amy Hope
Academy of Nutrition and Dietetics, Ann Erickson, M.A., R.D.
American Academy of Allergy, Asthma and Immunology, Michael R. Nelson, M.D., Ph.D.
American Academy of Neurology, Jack J. Chen, Pharm.D., FASCP, FCCP
American Academy of Nurse Practitioners, Jan Towers, Ph.D., NP-C
American Academy of Ophthalmology, Wiley A. Chambers, M.D.
American Academy of Pediatrics, Hank Farrar, M.D.
American Academy of Physician Assistants, Marie-Michele Leger, M.P.H., PA-C
American Academy of Veterinary Pharmacology and Therapeutics, Carol A. Davis, Ph.D.
American Association of Pharmaceutical Scientists, Christopher McCurdy, Ph.D., R.Ph.
American Botanical Council, Mark Blumenthal
American Chemical Society, Denise L. Creech
American College of Clinical Pharmacology, Peter Wiernik, M.D.
American College of Clinical Pharmacy, C. Edwin Webb, Pharm.D., M.P.H.
American College of Physicians, Brian L. Strom, M.D.
American Dental Association, Eugenio D. Beltrán-Aguilar, D.M.D., M.P.H., M.S., Dr.P.H.
American Dental Education Association, Vahn A. Lewis, Pharm.D., Ph.D.
American Geriatrics Society, Todd P. Semla, M.S., Pharm.D., BCPS, FCCP, AGSF
American Medical Association, Barry D. Dickinson, Ph.D.
American Nurses Association, Rita Munley Gallagher, Ph.D., R.N.
American Optometric Association, Jimmy D. Bartlett, O.D.
American Pharmacists Association, Thomas E. Menighan, R.Ph., M.B.A., FAPhA
American Public Health Association, Deborah K. Walker, Ed.D.
American Society for Clinical Pharmacology and Therapeutics, Patricia W. Slattum, Pharm.D., Ph.D.
American Society for Microbiology, Amy L. Leber, Ph.D.
American Society for Nutrition, Robert M. Russell, M.D.
American Society for Parenteral and Enteral Nutrition, Gordon S. Sacks, Pharm.D., BCNSP, FCCP
American Society for Pharmacology and Experimental Therapeutics, Mary Paine, Ph.D.
American Society for Quality, Donald C. Singer, M.S.
American Society of Anesthesiologists, H.A. Tillmann Hein, M.D., Ph.D.
American Society of Consultant Pharmacists, Arnold E. Clayman, Ph.D., FASHP
American Society of Health-System Pharmacists, Paul W. Abramowitz, Pharm.D., FASHP
American Veterinary Medical Association, Donald C. Sawyer, D.V.M., Ph.D.
Argentine Association of Industrial Pharmacy and Biochemistry, Federico Montes de Oca, M.B.A.
Brazilian National Association of Compounding Pharmacists, Maria do Carmo Garcez
Calibration and Validation Group, Herman Lam, Ph.D.
Canadian Pharmacists Association, Perry Eisenschmid, M.B.A.
Canadian Society for Pharmaceutical Sciences, Neal M. Davies, B.Sc. Pharm., Ph.D., R.Ph.
European Federation for Pharmaceutical Sciences, Hendrik J. de Jong, Ph.D.
Infusion Nurses Society, Mary C. Alexander, C.R.N.I., M.A., R.N., CAE, FAAN
Institute of Food Technologists, William Fisher, M.S.
International Academy of Compounding Pharmacists, John Voliva, R.Ph.
International Council of Nurses, David C. Benton, RGN, RMN, BSC, MPhil, FFNF, FRCN
International Society for Cellular Therapy, Joseph C. Laning, Ph.D.
International Society for Pharmaceutical Engineering, Stephen M. Tyler, M.S.
National Alliance of State Pharmacy Associations, Rebecca P. Snead, R.Ph., B.S.Pharm.
National Community Pharmacists Association, Ronna B. Hauser, Pharm.D.
National Pharmaceutical Association, Barry A. Bleidt, Ph.D., Pharm.D.
National Pharmacy Technician Association, Michael J. Johnston, CPhT
New Jersey Pharmaceutical Quality Control Association, Barbara J. Ferguson, B.A.
Pan American Pharmaceutical Federation, Maria Elena Girard-Cuesy
Parenteral Drug Association, Inc., Richard M. Johnson, M.Sc.
Regulatory Affairs Professionals Society, Sherry L. Keramidas, Ph.D., CAE
Society of Critical Care Medicine, Timothy S. Yeh, M.D., FCCM
Society of Nuclear Medicine and Molecular Imaging, Jeffrey P. Norenberg, Pharm.D.
Western Compendial Discussion Group, Assad J. Kazeminy, Ph.D.

Health Practitioner, Professional and Scientific Associations—U.S. State Medical Societies

California Medical Association, Charles W. Maas, M.D., M.P.H.
Connecticut State Medical Society, Eric B. Einstein, M.D.
Hawaii Medical Association, Jone Geimer-Flanders, D.O.
Illinois State Medical Society, Maitreyi Janarthanan, M.D.
Indiana State Medical Association, Daria Schooler, M.D., R.Ph.
Iowa Medical Society, Harold W. Miller, M.D.
Kansas Medical Society, Tracie Collins, M.D., M.P.H.
Maine Medical Association, Stevan Gressitt, M.D.
Massachusetts Medical Society, Bruce G. Karlin, M.D.
MedChi–Maryland State Medical Society, Peter H. Rheinstein, M.D., J.D., M.S.
Medical Association of the State of Alabama, Allan R. Goldstein, M.D.
Medical Society of New Jersey, Joseph N. Micale, M.D.
Medical Society of the District of Columbia, Kim A. Bullock, M.D.
Medical Society of the State of New York, Richard S. Blum, M.D.
Minnesota Medical Association, Robert K. Meiches, M.D., M.B.A.
Missouri State Medical Association, Thomas L. Holloway
Montana Medical Association, Jean Branscum
New Mexico Medical Society, Jerry D. McLaughlin, M.D.
North Dakota Medical Association, Robert (Rob) W. Beattie, M.D.
Pennsylvania Medical Society, Ralph Schmeltz, M.D., FACP, FACE
Puerto Rico Medical Association, Rolance G. Chavier-Roper, M.D.
Rhode Island Medical Society, Peter A. Hollmann, M.D.
South Dakota State Medical Association, E. Paul Amundson, M.D.
Tennessee Medical Association, John J. Ingram III, M.D.
Texas Medical Association, Kevin H. McKinney, M.D., FACE, FACP
Utah Medical Association, Michelle S. McOmber, B.S., M.B.A.
West Virginia State Medical Association, Kevin W. Yingling, M.D., R.Ph., FACP
Wisconsin Medical Society, Thomas M. Derrig, M.D.

afroozpharma@yahoo.com

Health Practitioner, Professional and Scientific Associations—U.S. State Pharmacy Associations

Alabama Pharmacy Association, Valerie A. Oakley, Pharm.D.
Alaska Pharmacists Association, Amber L. Briggs, Pharm.D., CGP, BCPS
Arizona Pharmacy Association, Kelly Ridgeway
Arkansas Pharmacists Association, Kristen G. Riddle, Pharm.D.
California Pharmacists Association, Jon R. Roth, CAE
Colegio de Farmaceuticos de Puerto Rico, Milagros Morales, R.Ph.
Colorado Pharmacists Society, Val Kalnins, R.Ph.
Connecticut Pharmacists Association, Peter J. Sposato, R.Ph., B.C.N.P.
Delaware Pharmacists Society, Kenneth (Kevin) Musto, R.Ph.
Florida Pharmacy Association, Michael A. Moné, J.D., R.Ph., FAPhA
Georgia Pharmacy Association, Larry L. Braden, B.S., R.Ph., D.Sc.
Hawaii Pharmacists Association, Ronald T. Taniguchi, Pharm.D.
Idaho State Pharmacy Association, Pam Eaton
Illinois Pharmacists Association, Norman A. Hoback, B.S.Pharm.
Indiana Pharmacists Alliance, Daniel D. Degnan III, Pharm.D., M.S.
Iowa Pharmacy Association, Thomas R. Temple, R.Ph., M.S.
Kansas Pharmacists Association, Michael Larkin
Kentucky Pharmacists Association, Patricia R. Freeman, Ph.D.
Louisiana Pharmacists Association, Randall Brooks, B.S.
Maine Pharmacy Association, Laurier A. Lamie, R.Ph.
Maryland Pharmacists Association, Matthew G. Shimoda, Pharm.D.
Massachusetts Pharmacists Association, Steven D. Geoffroy, R.Ph.
Michigan Pharmacists Association, Eric D. Roath, Pharm.D.
Minnesota Pharmacists Association, Lowell J. Anderson, D.Sc., FAPhA, FFIP
Mississippi Pharmacists Association, Kimsey O'Neal, Pharm.D.
Missouri Pharmacy Association, Ron L. Fitzwater, CAE, M.B.A.
Montana Pharmacy Association, Lori Morin, M.B.A., Pharm.D.
Nebraska Pharmacists Association, Samuel C. Augustine, Pharm.D., FAPhA
New Hampshire Pharmacists Association, Elizabeth A. Robertson, R.Ph.
New Jersey Pharmacists Association, Steve H. Zlotnick, Pharm.D.
New Mexico Pharmacists Association, William G. Troutman, Pharm.D.
North Carolina Association of Pharmacists, Stephen F. Eckel, Pharm.D., M.H.A.
North Dakota Pharmacists Association, Michael D. Schwab
Ohio Pharmacists Association, Amelia S. Bennett, R.Ph.
Oklahoma Pharmacists Association, Wiley L. Williams, J.D.
Oregon State Pharmacy Association, Joshua Free, Pharm.D., M.B.A.
Pennsylvania Pharmacists Association, George R. Haynes, Pharm.D., Ph.D.
Pharmacists Society of the State of New York, Tracy R. Russell, CAE
Pharmacy Society of Wisconsin, Susan M. Kleppin, R.Ph., FASHP
Rhode Island Pharmacists Association, John Grossomanides, Pharm.D.
South Carolina Pharmacy Association, Craig Burridge, M.S., CAE
South Dakota Pharmacists Association, Leonard J. Petrik, Pharm.D.
Tennessee Pharmacists Association, Micah Cost, Pharm.D., M.S.
Texas Pharmacy Association, Eric H. Frankel, MSE, Pharm.D.
Utah Pharmacists Association, Adam W. Jones
Virginia Pharmacists Association, Marianne R. Rollings, R.Ph.
Washington D.C. Pharmacy Association, Michael J. Kim, Pharm.D.
Washington State Pharmacy Association, Jeff Rochon, Pharm.D.
West Virginia Pharmacists Association, Patty Johnston, B.S.
Wyoming Pharmacy Association, William H. Rathburn, R.Ph.

Manufacturer, Trade and Affiliated Associations

American Chemistry Council, Michael P. Walls, Esq.
American Herbal Products Association, Maged H. Sharaf, Ph.D.
American Hospital Association, John R. Combes, M.D.
Animal Health Institute, Richard A. Carnevale, V.M.D.
Association of the European Self-Medication Industry, Christelle Anquez-Traxler
Biotechnology Industry Organization, Earl S. Dye, Ph.D.
Bulk Drug Manufacturers Association, Airra Krishna Reddy, B.Sc.
Compressed Gas Association, Michael B. Tiller, B.S., B.A.
Consumer Health Products Canada, Adam C. Kingsley, B.Sc., NP, CAE
Consumer Healthcare Products Association, John Punzi, Ph.D.
Council for Responsible Nutrition, James C. Griffiths, Ph.D.
Egyptian Chamber of Pharmaceutical Industry, Abdulla Molokhia, Ph.D.
European Generic Medicines Association, Julie Marechal-Jamal, M.S.
Flavor and Extract Manufacturers Association, John H. Cox, J.D.
Food Marketing Institute, Catherine M. Polley, R.Ph.
Generic Animal Drug Alliance, Stephanie Batliner
Generic Pharmaceutical Association, David R. Gaugh, R.Ph.
Grocery Manufacturers Association, Shannon M. Cooksey, M.S., PMP
Healthcare Distribution Management Association, Karen J. Ribler
Indian Drug Manufacturers' Association, Daara B. Patel, B.Com., D.I.M.M.
International Dairy Foods Association, John T. Allan III, B.S., M.S.
International Federation of Pharmaceutical Manufacturers and Associations, Caroline Mendy
International Food Additives Council, Robert Rankin
International Generic and Biosimilar Medicines, Nicholas Cappuccino, Ph.D.
International Pharmaceutical Excipients Council of the Americas, Priscilla Zawislak
Mexico's National Chamber of the Pharmaceutical Industry, J. Rivelino Flores, M.Sc.
National Association of Chain Drug Stores, Alex J. Adams, Pharm.D.
Personal Care Products Council, Beth Anne Lange, Ph.D., B.S.
Pharmaceutical Care Management Association, Greg S. Johnson, B.A.
Pharmaceutical Research and Manufacturers of America, J. Mark Wiggins, B.S., M.S.
São Paulo State Pharmaceutical Manufacturers Association, Nelson dos Santos, Jr.
The Joint Commission, Jeannell M. Mansur, B.S. Pharm., Pharm.D.
The Jordanian Association of Manufacturers of Pharmaceuticals & Medical Appliances, Hanan J. Sboul, M.B.A., CAE

afroozpharma@yahoo.com

Nongovernmental Standards-Setting and Conformity Assessment Bodies

Accreditation Council for Pharmacy Education, Dimitra V. Travlos, Pharm.D., BCPS
American Type Culture Collection, Elizabeth J. Kerrigan, B.A.
AOAC International, E. James Bradford, Ph.D.
Association for the Advancement of Medical Instrumentation, Joseph Carl Lewelling, B.A., M.A.
Chilean Pharmacopeia Foundation, Caroline R. Weinstein-Oppenheimer, Ph.D.
Clinical and Laboratory Standards Institute, Glen Fine, M.S., M.B.A., CAE
URAC, Kylanne Green, R.N., N.P.

afroozpharma@yahoo.com

2015 Recognition of Monograph and Reference Material Donors

USP acknowledges and appreciates the support of the following companies that participated in the USP standards-setting process by providing information for the development of new monographs or by donating reference standard candidate materials. The companies listed are those that either provided monographs that were published as proposals in 2015 or donated reference material candidates that were released as USP Reference Standards in 2015.

3V
Abbott Laboratories
Abbvie
ACS Dobfar
Agan Aroma & Fine Chemicals
Ajinomoto Aminoscience
Alcon Laboratories
Alembic
Allergan
AMAG Pharmaceuticals
American Chemical Service
Amgen
Apotex
Astrazeneca
Aurobindo Pharma
Bachem Americas
BASF
Baxter Healthcare
Bayer
Bayer Schering
Ben Venue Laboratories
Bidachem
Bioberica
Bioenergy Life Science
Biogen
Boehringer Ingelheim
Bristol-Myers Squibb
Calyx Chemicals & Pharma
Cambrex Karlskoga
Charmson Trading
Chattem Chemicals
Chemo
Chevron Phillips Chemical
China Pharmaceutical University
CHP Carbohydrate Pirna
Cilag
Clariant
Colorcon
Cosma
Covidien
Cremer Oleo
Croda
CU Chemie Uetikon
Cydex Pharmaceutical
Daiichi Sankyo
Dipharma
Dottikon Exclusive Synthesis
Dow Chemical Company
Dow Corning
Dr. Reddy's Laboratories
DSM Nutritional Products
Dupont
Dupont Nutrition and Health
DUSA Pharmaceuticals
Egis Pharmaceuticals
Eisai Food and Chemical
Eli Lilly and Company
Endo Pharmaceuticals
Erregierre
Evolva
Evonik
Excella
Fine Chemicals
Fine Organics
Fresenius Kabi Oncology
GE Healthcare Bio-Sciences
Genentech
GlaxoSmithKline
Glenmark Generics
Grifols
Hayashibara
Health Protection Agency
Helsinn
Hetero Drugs
Hoffman-Laroche
Hovione Farmaciencia
ICL Performance Products
Indena
Ind-Swift Laboratories
Institute of Shortening and Edible Oils
International Specialty Products
International Vitamin
Interquim
Janssen Pharmaceutical
Japan Food Research Laboratories
Jost Chemical
Jubilant Life Sciences
Ka Malle Pharmaceuticals
Kongo Chemical
Koster Keunen
Kythera Biopharmaceuticals
Laboratori Alchemia
Linnea
Longyan City Run Bao Bio-Technology
Lundbeck Pharmaceutical
Lupin Pharma
Lusochimica
Mafco
Mallinckrodt
Mantrose-Haeuser
Meda Pharmaceuticals
Medichem
Medpointe Healthcare
Megafine Pharma
Menadiona
Merck
Moehs Iberica
Morepen Laboratories
Mutchler
Mylan Laboratories

afroozpharma@yahoo.com

Mylan Pharmaceuticals
Natac
Nature-Standard
Naturex
Noramco
Novartis
Novo Nordisk
Novozymes Delta
Nutrasweet
Opocrin
Orchid Chemicals & Pharmaceuticals
Otsuka Chemical
Pfizer
Pharmavite
Pliva Croatia
Polypeptide Laboratories
Precise Chemipharma
Provepharm
Proviron Functional Chemicals
Recordati
Reliance Life Sciences
Roche
Roquette America
Sandoz
Sanofi
Schwabe
Scino Pharm Taiwan
Seppic
Septodont
Shanghai Institute of Materia Medica
Sichuan Xieli Pharmaceutical
Sicor
Sifavitor
Smilax Laboratories
Sourcetech Quimica
Stearinerie Dubois
Stepan Company
Sterling S.N.I.F.F. Italia
Strides Arcolab
Suzhou Sanjian Nutrient and Health Products
Symbiotec Pharmalab
Symed Labs
Synkem
Takeda Pharmaceuticals North America
Taro Pharmaceuticals
Tekni-Plex
Teva API
Teva Pharmaceuticals Industries, Israel
Teva Pharmaceuticals
The Medicines Company
Topharman Shanghai
Torrent Pharmaceuticals
UCB Pharma
University of Macau
Upsher-Smith Laboratories
Vertellus Specialties
Virupaksha Organics
Wacker Chemicals
Wakunaga of America
Yunnan Hande Bio-Tech
Zambon Chemicals
Zeon Chemicals
Zhejiang Apeloa Jiayuan Pharmaceutical
Zhejiang Hangzhou Xinfu Pharmaceutical
Zhejiang Huahai Pharmaceutical
Zhejiang Medicineco
Zhejiang Supor Pharmaceuticals
Zydus Pharmaceuticals

afroozpharma@yahoo.com

Articles of Incorporation

In May of 1900, the USP Board of Trustees was directed by the Convention to incorporate the USP organization under the laws of the District of Columbia. Because the District of Columbia required that the majority of officers subscribing to the Certificate of Incorporation be residents, the filing was slightly delayed in order to appoint appropriate representatives. Nevertheless, the articles of incorporation were prepared, appropriately signed, and finally filed on July 11 of that year. The original certificate reads as follows:

Certification of Incorporation

This is to certify that we, whose names are hereunto subscribed, citizens of the United States, of full age, and a majority citizens of the District of Columbia, do associate ourselves together pursuant to the provisions of sections 545–552 inclusive of the Revised Statutes of the United States relating to the District of Columbia and of the Act of Congress to amend the same, approved the twenty-third day of April 1884, under the corporate name of The United States Pharmacopoeial Convention.

This Association is organized for a period of nine hundred and ninety-nine years. The particular objects and business of this Association are the encouragement and promotion of the science and art of medicine and pharmacy by selecting by research and experiment and other proper methods and by naming such materials as may be properly used as medicines and drugs with formulas for their preparation; by establishing one uniform standard and guide for the use of those engaged in the practice of medicine and pharmacy in the United States whereby the identity, strength, and purity of all such medicines and drugs may be accurately determined, and for other like and similar purposes; and by printing and distributing at suitable intervals such formulas and the results of such and similar selections, names and determinations among the members of this Association, pharmacists, and physicians generally in the United States and others interested in pharmacy and medicine.

The management and control of the affairs, funds, and property of this Association for the first year of its existence shall be vested in a Board of Trustees consisting of the seven following persons:

Albert E. Ebert
Samuel A.D. Sheppard
William S. Thompson
Charles E. Dohme
George W. Sloan
Horatio C. Wood
Charles Rice

In testimony whereof we have hereunto set our hands and affixed our seals this seventh day of July, 1900.

William S. Thompson [SEAL]
G. Lloyd Magruder [SEAL]
John T. Winter [SEAL]
Thomas C. Smith [SEAL]
William M. Mew [SEAL]
Frank M. Criswell [SEAL]
Murray G. Motter [SEAL]

afroozpharma@yahoo.com

USP Governance

Bylaws

The USP 2015–2020 Bylaws are available at *http://www.usp.org/about-usp/leadership/bylaws*.

Rules and Procedures

The Rules and Procedures of the 2015–2020 Council of Experts are available at *http://www.usp.org/about-usp/leadership/policies-rules/rules-procedures-council-experts*.

USP Policies

The USP policies are available at *http://www.usp.org/about-usp/leadership/policies-rules/rules-procedures-council-experts*.

afroozpharma@yahoo.com

afroozpharma@yahoo.com

USP 40

THE UNITED STATES PHARMACOPEIA

Official from May 1, 2017

FORTIETH REVISION

afroozpharma@yahoo.com

© 2016 The United States Pharmacopeial Convention
12601 Twinbrook Parkway, Rockville, MD 20852
All rights reserved.

afroozpharma@yahoo.com

Admissions

Articles Admitted to *USP 40* by Supplement

First Supplement (August 1, 2016)

GENERAL CHAPTERS

⟨507⟩ Protein Determination Procedures
⟨800⟩ Hazardous Drugs—Handling in Healthcare Settings
⟨1050.1⟩ Design, Evaluation, and Characterization of Viral Clearance Procedures
⟨1207.1⟩ Package Integrity Testing in the Product Life Cycle—Test Method Selection and Validation
⟨1207.2⟩ Package Integrity Leak Test Technologies
⟨1207.3⟩ Package Seal Quality Test Technologies
⟨1228⟩ Depyrogenation
⟨1228.1⟩ Dry Heat Depyrogenation
⟨1229.5⟩ Biological Indicators for Sterilization
⟨1229.9⟩ Physicochemical Integrators and Indicators for Sterilization
⟨1229.12⟩ New Sterilization Methods
⟨2251⟩ Adulteration of Dietary Supplements with Drugs and Drug Analogues

USP MONOGRAPHS

Abacavir and Lamivudine Tablets
Adapalene Gel
Amiodarone Hydrochloride Injection
Argatroban
Calcium Succinate
Candesartan Cilexetil Tablets
Diphenhydramine Hydrochloride and Ibuprofen Capsules
Dronedarone Hydrochloride
Dronedarone Tablets
Exemestane
Lufenuron
Palonosetron Hydrochloride
Perindopril Erbumine
Perindopril Erbumine Tablets
Rabeprazole Sodium
Sildenafil Tablets
Teniposide
Teniposide Injection
Triamcinolone Acetonide Nasal Spray
Vardenafil Hydrochloride
Zolmitriptan
Zolmitriptan Tablets

DIETARY SUPPLEMENTS

Rhodiola rosea Capsules
Rhodiola rosea Tablets
Ribose
Ubiquinol
Ubiquinol Capsules

Front Matter

afroozpharma@yahoo.com

Second Supplement (December 1, 2016)

GENERAL CHAPTERS

⟨782⟩ Vibrational Circular Dichroism Spectroscopy
⟨1004⟩ Mucosal Drug Products—Performance Tests
⟨1029⟩ Good Documentation Guidelines
⟨1063⟩ Shear Cell Methodology for Powder Flow Testing
⟨1228.3⟩ Depyrogenation by Filtration
⟨1228.5⟩ Endotoxin Indicators for Depyrogenation
⟨1229.13⟩ Sterilization-in-Place
⟨1782⟩ Vibrational Circular Dichroism Spectroscopy—Theory and Practice

USP MONOGRAPHS

Cetirizine Hydrochloride Orally Disintegrating Tablets
Desloratadine
Desloratadine Tablets
Desloratadine Orally Disintegrating Tablets
Imipramine Pamoate Capsules
Metronidazole Extended-Release Tablets
Octreotide Acetate
Oxymorphone Hydrochloride Tablets
Oxymorphone Hydrochloride Extended-Release Tablets
Polyethylene Glycol 3350
Ropinirole Extended-Release Tablets
Zolmitriptan Orally Disintegrating Tablets

DIETARY SUPPLEMENTS

Methylcobalamin Tablets
Northern Schisandra Fruit Dry Extract

New Articles Appearing in *USP 40* That Were Not Included in *USP 39* Including Supplements

[NOTE—The articles included in this list are noted in the book with the following symbols ▲ ▲USP40. This applies to new articles as well as sections of existing items that have been revised.]

GENERAL CHAPTERS

⟨89.1⟩ Collagenase I
⟨89.2⟩ Collagenase II
⟨127⟩ Flow Cytometric Enumeration of CD34+ Cells
⟨1039⟩ Chemometrics
⟨1602⟩ Spacers and Valved Holding Chambers Used with Inhalation Aerosols—Characterization Tests
⟨1821⟩ Radioactivity—Theory and Practice
⟨1823⟩ Positron Emission Tomography Drugs—Information

USP MONOGRAPHS

Cidofovir
Cidofovir Injection
Doxercalciferol
Ixabepilone
Pemetrexed Disodium
Pemetrexed for Injection
Quetiapine Extended-Release Tablets
Selamectin
Tissue Human Amnion Chorion Membrane Dehydrated

GLOBAL HEALTH MONOGRAPHS

Chlorhexidine Gluconate Topical Gel

afroozpharma@yahoo.com

DIETARY SUPPLEMENTS

Citrulline
Hesperidin
Japanese Honeysuckle Flower
Japanese Honeysuckle Flower Dry Extract
Japanese Honeysuckle Flower Powder
St. John's Wort Flowering Top Dry Extract Capsules
St. John's Wort Flowering Top Dry Extract Tablets
Sodium Ferrous Citrate
Tienchi Ginseng Root and Rhizome Dry Extract Capsules
Tienchi Ginseng Root and Rhizome Dry Extract Tablets
Tienchi Ginseng Root and Rhizome Powder Capsules
Tienchi Ginseng Root and Rhizome Powder Tablets

Articles Included in *USP 39* But Not Included in *USP 40*

GENERAL CHAPTERS

〈21〉 Thermometers
〈751〉 Metal Particles in Ophthalmic Ointments
〈851〉 Spectrophotometry and Light-Scattering
〈1035〉 Biological Indicators for Sterilization
〈1045〉 Biotechnology-Derived Articles
〈1209〉 Sterilization—Chemical and Physicochemical Indicators and Integrators

USP MONOGRAPHS

Biological Indicator for Dry-Heat Sterilization, Paper Carrier
Biological Indicator for Ethylene Oxide Sterilization, Paper Carrier
Biological Indicators for Moist Heat, Dry Heat, and Gaseous Modes of Sterilization, Liquid Spore Suspensions
Biological Indicators for Moist Heat, Dry Heat, and Gaseous Modes of Sterilization, Nonpaper Carriers
Biological Indicator for Steam Sterilization, Paper Carrier
Biological Indicator for Steam Sterilization, Self-Contained
Chlordiazepoxide Hydrochloride for Injection
Dolasetron Mesylate Injection
Dolasetron Mesylate Tablets
Multiple Electrolytes and Dextrose Injection Type 4
Multiple Electrolytes and Invert Sugar Injection Type 1
Multiple Electrolytes and Invert Sugar Injection Type 2
Multiple Electrolytes and Invert Sugar Injection Type 3
Iopanoic Acid
Iopanoic Acid Tablets
Ipodate Sodium
Ipodate Sodium Capsules
Iophendylate
Iophendylate Injection
Mangafodipir Trisodium
Mangafodipir Trisodium Injection
Oxtriphylline Delayed-Release Tablets
Oxymorphone Hydrochloride Suppositories
Propoxyphene Hydrochloride
Propoxyphene Hydrochloride Capsules
Propoxyphene Hydrochloride and Acetaminophen Tablets
Propoxyphene Hydrochloride, Aspirin, and Caffeine Capsules
Propoxyphene Napsylate
Propoxyphene Napsylate Oral Suspension
Propoxyphene Napsylate Tablets
Propoxyphene Napsylate and Acetaminophen Tablets
Propoxyphene Napsylate and Aspirin Tablets
Sodium Chloride and Dextrose Tablets
Succinylcholine Chloride for Injection

Front Matter

afroozpharma@yahoo.com

ANNOTATED LIST

General Notices, Monographs, General Chapters, Reagents, and Tables Affected by Changes Appearing in USP 40

Page citations refer to the pages of USP 40. Note—In the table below, if a section is new or if a subsection is added to or deleted from an existing section, it is labeled as such in parentheses after the section or subsection name. Items on this list that appear without the designation "new", "added", or "deleted" are items in which changes have been made to existing official text.

General Notices

General Notices, 3
3. Conformance to Standards; 5. Monograph Components; 6. Testing Practices and Procedures; and *8. Terms and Definitions*

General Chapters

General Tests and Assays

General Requirements for Tests and Assays
⟨1⟩ Injections and Implanted Drug Products (Parenterals)—Product Quality Tests, 67
Biological Tests and Assays
⟨89.1⟩ Collagenase I (new), 180
⟨89.2⟩ Collagenase II (new), 185
⟨127⟩ Flow Cytometric Enumeration of CD34+ Cells (new), 216
⟨151⟩ Pyrogen Test, 234
Introduction
⟨165⟩ Prekallikrein Activator (new), 241
Chemical Tests and Assays
⟨481⟩ Riboflavin Assay, 386
ASSAY
⟨531⟩ Thiamine Assay, 407
ASSAY
Physical Tests and Determinations
⟨659⟩ Packaging and Storage Requirements, 529
⟨670⟩ Auxiliary Packaging Components, 558
⟨821⟩ Radioactivity, 751

General Information

⟨1015⟩ Automated Radiochemical Synthesis Apparatus (deleted), 851
⟨1039⟩ Chemometrics (new), 963
⟨1602⟩ Spacers and Valved Holding Chambers Used with Inhalation Aerosols—Characterization Tests (new), 1988
⟨1821⟩ Radioactivity—Theory and Practice (new), 2177
⟨1823⟩ Positron Emission Tomography Drugs—Information (new), 2190

Dietary Supplements

⟨2251⟩ Screening for Undeclared Drugs and Drug Analogues, 2285

Reagents, Indicators, and Solutions

Reagent Specifications
Reagents Introduction, 2323
4. Definitions
Butylated Hydroxytoluene (new), 2341
Copper Sulfate Pentahydrate (new), 2348
Cupric Nitrate, 2348
1,1-Cyclobutanedicarboxylic Acid (new), 2349
Hydroxypropyl Cellulose (new), 2364
Isonicotinic Acid, 2366
(*R*)-(+)-Limonene (new), 2367
Lithium (new), 2368
Malonic Acid (new), 2368
D-Mannitol (new), 2369
Nickel Nitrate Hexahydrate (new), 2373
(*R*)-(−)-α-Phellandrene (new), 2378
(+)-α-Pinene (new), 2380
β-Pinene (new), 2380
Polysorbate 80 (new), 2381
Propionic Acid (new), 2383
Sabinene (new), 2386
Sodium 1-Dodecanesulfonate (new), 2391
Tetrabutylammonium Hydroxide 30-Hydrate, 2397
Tetrahydrofuran, 2398
Water (new), 2405
Water, Carbon Dioxide-Free, 2405
Water, Deaerated, 2405
Water, Organic-Free (new), 2405
Water, Particle-Free (new), 2405
Test Solutions
1 M Acetic Acid TS (new), 2411
2 M Acetic Acid TS (new), 2412
1 M Ammonium Hydroxide TS (new), 2413
2 M Ammonium Hydroxide TS (new), 2413
0.01 M Edetate Disodium TS (new), 2415
0.01 N Hydrochloric Acid TS (new), 2416
0.025 N Hydrochloric Acid TS (new), 2416
0.05 N Hydrochloric Acid TS (new), 2416
0.05 M Phosphoric Acid TS (new), 2419
0.06 M Phosphoric Acid TS (new), 2419
1 N Phosphoric Acid TS (new), 2419
20% Phosphoric Acid TS (new), 2419
1.8 N Potassium Hydroxide TS (new), 2420
45% Potassium Hydroxide TS (new), 2420
0.02 M Monobasic Potassium Phosphate TS (new), 2420
0.2 M Dibasic Potassium Phosphate TS (new), 2420
0.0025 N Sodium Hydroxide TS (new), 2421
0.02 N Sodium Hydroxide TS (new), 2421
2 N Sodium Hydroxide TS (new), 2421
2.5 N Sodium Hydroxide TS (new), 2421
10 N Sodium Hydroxide TS (new), 2421
1 M Sulfuric Acid TS (new), 2422
0.2 N Sulfuric Acid TS (new), 2422

afroozpharma@yahoo.com

0.5 N Sulfuric Acid TS (new), 2422
2 N Sulfuric Acid TS (new), 2422
0.02 M Tetrabutylammonium Hydrogen Sulfate TS (new), 2422

Volumetric Solutions
2 N Acetic Acid VS, 2424
0.1 N Ammonium Thiocyanate VS, 2424
0.01 M Bismuth Nitrate VS, 2424
0.1 N Bromine VS, 2424
0.05 N Ceric Ammonium Nitrate VS, 2424
0.1 N Ceric Sulfate VS, 2424
0.1 N Cupric Nitrate VS, 2425
Cupric Tartrate, Alkaline, Solution (Fehling's Solution), 2425
0.05 M Edetate Disodium VS, 2425
0.1 M Edetate Disodium VS, 2426
0.1 N Ferric Ammonium Sulfate VS, 2426
0.1 N Ferrous Ammonium Sulfate VS, 2426
0.02 N Hydrochloric Acid VS (new), 2426
0.1 N Hydrochloric Acid VS (new), 2426
0.5 N Hydrochloric Acid VS, 2427
1 N Hydrochloric Acid VS, 2427
0.1 M Alcoholic Hydrochloric Acid VS, 2427
0.5 N Hydrochloric Acid in Methanol VS, 2427
0.01 N Iodine VS, 2427
0.05 N Iodine VS, 2427
0.1 N Iodine VS, 2427
0.01 M Lead Nitrate VS, 2428
0.01 M Lead Perchlorate VS, 2428
0.1 M Lead Perchlorate VS, 2428
0.1 N Lithium Methoxide in Chlorobenzene VS, 2428
0.02 N Lithium Methoxide in Methanol VS, 2428
0.1 N Lithium Methoxide in Methanol VS, 2429
0.1 N Lithium Methoxide in Toluene VS, 2429
0.01 M Magnesium Chloride VS, 2429
0.1 M Mercuric Nitrate VS, 2429
0.1 N Oxalic Acid VS, 2429
0.1 N Perchloric Acid in Dioxane VS, 2429
0.1 N Perchloric Acid in Glacial Acetic Acid VS, 2430
0.1 N Potassium Arsenite VS, 2430
0.1 N Potassium Bromate VS, 2430
0.1 N Potassium Bromide–Bromate VS, 2430
0.1 N Potassium Dichromate VS, 2430
0.05 M Potassium Ferricyanide VS, 2431
0.1 M Alcoholic Potassium Hydroxide VS, 2431
0.5 N Alcoholic Potassium Hydroxide VS, 2431
0.1 N Methanolic Potassium Hydroxide VS, 2431
1 N Potassium Hydroxide VS, 2431
0.05 M Potassium Iodate VS, 2431
0.1 N Potassium Permanganate VS, 2432
0.1 N Potassium Thiocyanate VS, 2432
0.002 N Silver Nitrate in Isopropyl Alcohol VS (new), 2432
0.1 N Silver Nitrate VS, 2432
0.05 N Silver Nitrate VS (new), 2432
0.05 M Sodium Arsenite VS, 2432
1 N Sodium Hydroxide VS, 2432
0.1 N Alcoholic Sodium Hydroxide VS, 2433
0.1 N Sodium Hydroxide VS (new), 2433
0.5 N Sodium Methoxide in Methanol VS, 2433
0.1 N Sodium Methoxide in Toluene VS, 2433
0.1 M Sodium Nitrite VS, 2433
0.02 M Sodium Tetraphenylboron VS, 2434
0.1 N Sodium Thiosulfate VS, 2434
Standard Dichlorophenol–Indophenol Solution, 2434
1 N Sulfuric Acid VS, 2434
0.5 N Sulfuric Acid in Alcohol VS, 2434
0.1 N Tetrabutylammonium Hydroxide VS, 2434
0.1 N Tetrabutylammonium Hydroxide in Methanol/Isopropyl Alcohol VS, 2435
0.1 M Tetramethylammonium Bromide VS, 2435
0.1 M Tetramethylammonium Chloride VS, 2435
0.1 N Titanium Trichloride VS, 2435
0.05 M Zinc Sulfate VS, 2436
0.1 M Zinc Sulfate VS (new), 2436

Chromatographic Columns
L19, 2437
L22, 2437
L40, 2437
L45, 2437
L51, 2438
L54, 2438
L56, 2438
L80, 2439
L90 (new), 2439
L91 (new), 2439

Reference Tables

Container Specifications for Capsules and Tablets
Biperiden Hydrochloride Tablets (deleted), 2444
Quetiapine Extended-Release Tablets (new), 2450
St. John's Wort Flowering Top Dry Extract Capsules (new), 2451
St. John's Wort Flowering Top Dry Extract Tablets (new), 2451
Tienchi Ginseng Root and Rhizome Powder Capsules (new), 2451
Tienchi Ginseng Root and Rhizome Powder Tablets (new), 2451
Tienchi Ginseng Root and Rhizome Dry Extract Capsules (new), 2451
Tienchi Ginseng Root and Rhizome Dry Extract Tablets (new), 2451

Description and Relative Solubility of USP and NF Articles
Doxercalciferol (new), 2471
Eucalyptus Oil (new), 2474
Ixabepilone (new), 2482
Methacrylic Acid and Ethyl Acrylate Copolymer Dispersion, 2485
Methylene Blue, 2486
Pemetrexed Disodium (new), 2492
Perindopril Erbumine (new), 2493
Sodium Succinate (new), 2503

Monographs (USP 40)

Acebutolol Hydrochloride Capsules, 2538
IDENTIFICATION
ASSAY
PERFORMANCE TESTS
Dissolution
IMPURITIES
Acetaminophen, Chlorpheniramine Maleate, and Dextromethorphan Hydrobromide Tablets, 2561
ASSAY
Acetaminophen, Chlorpheniramine Maleate, and *Dextromethorphan Hydrobromide*
IMPURITIES
4-Aminophenol in Acetaminophen-Containing Drug Products (added)
ADDITIONAL REQUIREMENTS
USP Reference Standards
Acetaminophen and Codeine Phosphate Oral Solution, 2564
ASSAY
Acetaminophen and *Codeine Phosphate*
IMPURITIES
4-Aminophenol in Acetaminophen-Containing Drug Products (added)

afroozpharma@yahoo.com

Acetaminophen and Codeine Phosphate Oral Suspension, 2565
ASSAY
Acetaminophen and *Codeine Phosphate*
IMPURITIES
4-Aminophenol in Acetaminophen-Containing Drug Products (added)
Acetaminophen, Dextromethorphan Hydrobromide, Doxylamine Succinate, and Pseudoephedrine Hydrochloride Oral Solution, 2567
ASSAY
Acetaminophen and *Dextromethorphan Hydrobromide*
IMPURITIES
4-Aminophenol in Acetaminophen-Containing Drug Products (added)
Acetaminophen and Diphenhydramine Citrate Tablets, 2569
ASSAY
Acetaminophen and *Diphenhydramine Citrate*
IMPURITIES
4-Aminophenol in Acetaminophen-Containing Drug Products (added)
Acetaminophen, Diphenhydramine Hydrochloride, and Pseudoephedrine Hydrochloride Tablets, 2570
ASSAY
Acetaminophen and *Diphenhydramine Hydrochloride*
IMPURITIES
4-Aminophenol in Acetaminophen-Containing Drug Products (added)
Acetaminophen and Pseudoephedrine Hydrochloride Tablets, 2571
ASSAY
IMPURITIES
4-Aminophenol in Acetaminophen-Containing Drug Products (added)
Acetaminophen and Tramadol Hydrochloride Tablets, 2572
TITLE
ASSAY
OTHER COMPONENTS
Limit of p-Aminophenol (deleted)
IMPURITIES
ADDITIONAL REQUIREMENTS
USP Reference Standards
Tramadol Hydrochloride Extended-Release Tablets, 2575
PERFORMANCE TESTS
Dissolution
IMPURITIES
Alfuzosin Hydrochloride Extended-Release Tablets, 2626
PERFORMANCE TESTS
Dissolution
IMPURITIES
Alprazolam Extended-Release Tablets, 2644
IDENTIFICATION
Test B (added)
ASSAY
PERFORMANCE TESTS
Dissolution
ADDITIONAL REQUIREMENTS
USP Reference Standards
Alprazolam Orally Disintegrating Tablets, 2648
IDENTIFICATION
Test A and *Test B* (added)
ASSAY
PERFORMANCE TESTS
Dissolution
Amiloxate, 2719
IDENTIFICATION
Ultraviolet Absorption, Test B and *Test C* (added)
ASSAY
SPECIFIC TESTS
Acidity
Aminobenzoate Potassium, 2720
CHEMICAL INFORMATION
DEFINITION
IDENTIFICATION
Test A and *Test B*
ASSAY
IMPURITIES
Chloride and Sulfate, Chloride; Chloride and Sulfate, Sulfate; Volatile Diazotizable Substances; Limit of Aniline and p-Toluidine; and *Organic Impurities*
ADDITIONAL REQUIREMENTS
USP Reference Standards
Aminobenzoate Potassium Capsules, 2722
IDENTIFICATION
Test B (added)
ASSAY
IMPURITIES
ADDITIONAL REQUIREMENTS
USP Reference Standards
Aminophylline, 2735
IDENTIFICATION
Infrared Absorption, Test A and *Test B*
ASSAY
OTHER COMPONENTS
IMPURITIES
ADDITIONAL REQUIREMENTS
Packaging and Storage and *USP Reference Standards*
Aminophylline Injection, 2737
IDENTIFICATION
Infrared Absorption, Test B and *Test C*
ASSAY
IMPURITIES
ADDITIONAL REQUIREMENTS
Packaging and Storage and *USP Reference Standards*
Aminophylline Oral Solution, 2739
IDENTIFICATION
Infrared Absorption, Test A
ASSAY
IMPURITIES
ADDITIONAL REQUIREMENTS
USP Reference Standards
Aminophylline Tablets, 2742
IDENTIFICATION
Infrared Absorption, Test A and *Test B*
ASSAY
IMPURITIES
ADDITIONAL REQUIREMENTS
Packaging and Storage and *USP Reference Standards*
Amlodipine and Valsartan Tablets, 2763
DEFINITION
ASSAY
PERFORMANCE TESTS
Dissolution
IMPURITIES
ADDITIONAL REQUIREMENTS
Labeling (added)
Amlodipine, Valsartan, and Hydrochlorothiazide Tablets, 2767
DEFINITION
ASSAY
PERFORMANCE TESTS
Dissolution
IMPURITIES
ADDITIONAL REQUIREMENTS
Labeling (added)
Aripiprazole Tablets, 2858
ASSAY

afroozpharma@yahoo.com

PERFORMANCE TESTS
Dissolution
IMPURITIES
Ascorbic Acid Injection, 2866
IDENTIFICATION
Test C
Azathioprine Sodium for Injection, 2917
IDENTIFICATION
Test B (added)
ASSAY
SPECIFIC TESTS
Completeness of Solution (deleted)
ADDITIONAL REQUIREMENTS
Packaging and Storage
Betamethasone Valerate Cream, 3012
IDENTIFICATION
Test A and *Test B*
ASSAY
IMPURITIES
ADDITIONAL REQUIREMENTS
USP Reference Standards
Betamethasone Valerate Ointment, 3014
IDENTIFICATION
Test A and *Test B*
ASSAY
IMPURITIES
ADDITIONAL REQUIREMENTS
USP Reference Standards
Biperiden (deleted), 3028
Biperiden Hydrochloride (deleted), 3028
Biperiden Hydrochloride Tablets (deleted), 3029
Biperiden Lactate Injection (deleted), 3030
Carboplatin, 3202
DEFINITION
IDENTIFICATION
Infrared Absorption, Test A and *Test B* (added)
ASSAY
OTHER COMPONENTS
IMPURITIES
Limit of 1,1-Cyclobutanedicarboxylic Acid and *Organic Impurities*
SPECIFIC TESTS
Water Determination, Method I (deleted) and *Loss on Drying* (added)
ADDITIONAL REQUIREMENTS
Packaging and Storage
Carboplatin for Injection, 3203
IDENTIFICATION
Test B (added)
ASSAY
IMPURITIES
ADDITIONAL REQUIREMENTS
Packaging and Storage
Ceftriaxone for Injection, 3305
ASSAY
IMPURITIES
ADDITIONAL REQUIREMENTS
Packaging and Storage
Ceftriaxone Sodium, 3307
ASSAY
IMPURITIES
ADDITIONAL REQUIREMENTS
Packaging and Storage
Cidofovir (new), 3414
Cidofovir Injection (new), 3415
Cisatracurium Besylate, 3440
IMPURITIES
Organic Impurities
SPECIFIC TESTS
pH (deleted) and *Water Determination*
ADDITIONAL REQUIREMENTS
USP Reference Standards
Cisplatin, 3444
IDENTIFICATION
Infrared Absorption, Test B and *Thin-Layer Chromatography, Test C* (deleted)
ASSAY
IMPURITIES
Limit of Trichloroammineplatinate and *Limit of Transplatin*
SPECIFIC TESTS
Platinum Content
ADDITIONAL REQUIREMENTS
Packaging and Storage
Cisplatin for Injection, 3446
IDENTIFICATION
Test B (added)
ASSAY
IMPURITIES
Limit of Trichloroammineplatinate and *Limit of Transplatin*
Corticotropin Injection, 3577
ASSAY
Corticotropin for Injection, 3578
ASSAY
Repository Corticotropin Injection, 3580
ASSAY
Cyanocobalamin, 3596
ASSAY
Cysteine Hydrochloride, 3621
SPECIFIC TESTS
Loss on Drying
Demeclocycline Hydrochloride Tablets, 3647
IDENTIFICATION
ASSAY
PERFORMANCE TESTS
Dissolution
SPECIFIC TESTS
Loss on Drying (deleted)
Desipramine Hydrochloride Tablets, 3651
IDENTIFICATION
Test A and *Test B* (added)
ASSAY
IMPURITIES
Dextromethorphan, 3704
IDENTIFICATION
Test B
SPECIFIC TESTS
Melting Range or Temperature (deleted) and *Optical Rotation* (deleted)
ADDITIONAL REQUIREMENTS
USP Reference Standards
Dextromethorphan Hydrobromide, 3705
IDENTIFICATION
Test A, Test B, and *Test C* (deleted)
SPECIFIC TESTS
Optical Rotation (deleted)
ADDITIONAL REQUIREMENTS
USP Reference Standards
Diphenhydramine Hydrochloride Capsules, 3803
IMPURITIES
Diphenhydramine Hydrochloride Oral Solution, 3806
IMPURITIES
ADDITIONAL REQUIREMENTS
USP Reference Standards
Diphenhydramine and Phenylephrine Hydrochlorides Tablets, 3810
IMPURITIES
ADDITIONAL REQUIREMENTS
USP Reference Standards
Doxercalciferol (new), 3880
Doxycycline Hyclate Capsules, 3897
IDENTIFICATION
ASSAY
PERFORMANCE TESTS
Dissolution

afroozpharma@yahoo.com

IMPURITIES
Organic Impurities (added)
SPECIFIC TESTS
Water Determination, Method I (deleted)
ADDITIONAL REQUIREMENTS
Packaging and Storage and *USP Reference Standards*

Doxycycline Hyclate Tablets, 3900
IDENTIFICATION
Procedure (deleted) and *Test A* (added)
ASSAY
PERFORMANCE TESTS
Dissolution
IMPURITIES
Organic Impurities (added)
SPECIFIC TESTS
Water Determination, Method I (deleted)
ADDITIONAL REQUIREMENTS
Packaging and Storage and *USP Reference Standards*

Dutasteride, 3924
IMPURITIES
Organic Impurities, Procedure 2

Esomeprazole Magnesium, 4057
SPECIFIC TESTS
Water Determination and *Crystallinity* (added)
ADDITIONAL REQUIREMENTS
Packaging and Storage and *Labeling*

Fenbendazole, 4151
IDENTIFICATION
IMPURITIES
Organic Impurities
ADDITIONAL REQUIREMENTS
Packaging and Storage

Fexofenadine Hydrochloride and Pseudoephedrine Hydrochloride Extended-Release Tablets, 4189
PERFORMANCE TESTS
Dissolution

Galantamine Extended-Release Capsules, 4367
ASSAY
PERFORMANCE TESTS
Dissolution
IMPURITIES

Heparin Sodium, 4475
IDENTIFICATION
Molecular Weight Determinations, Test D and *Test E*
IMPURITIES
Nucleotidic Impurities

Hydrocortisone Sodium Succinate, 4519
IDENTIFICATION
Test C

Hydroxyzine Hydrochloride, 4539
IDENTIFICATION
Infrared Absorption, Test A
ASSAY
IMPURITIES
Organic Impurities
ADDITIONAL REQUIREMENTS
USP Reference Standards

Hydroxyzine Hydrochloride Tablets, 4542
IDENTIFICATION
Test A and *Test B* (added)
ASSAY
IMPURITIES
Organic Impurities (added)
ADDITIONAL REQUIREMENTS
Packaging and Storage and *USP Reference Standards*

Ibuprofen Oral Suspension, 4556
IDENTIFICATION
Test A and *Test B*
ASSAY
IMPURITIES
Limit of Ibuprofen Related Compound C (deleted) and *Organic Impurities* (added)
ADDITIONAL REQUIREMENTS
USP Reference Standards

Iodine Topical Solution, 4630
IDENTIFICATION
Identification Tests—General, Iodide, Test B and *Sodium, Test C* (added)

Iodine Tincture, 4631
IDENTIFICATION
Identification Tests—General, Iodide, Test B and *Sodium, Test C* (added)

Strong Iodine Tincture, 4632
IDENTIFICATION
Identification Tests—General, Iodide, Test B and *Potassium, Test C* (added)

Iothalamate Sodium Injection (deleted), 4659

Isoflurane, 4688
IMPURITIES
Chloride
SPECIFIC TESTS
Acidity or Alkalinity (added)

Ixabepilone (new), 4739

Ketorolac Tromethamine, 4753
IDENTIFICATION
Test B
IMPURITIES
Organic Impurities

Levetiracetam Extended-Release Tablets, 4812
PERFORMANCE TESTS
Dissolution

Levocetirizine Dihydrochloride, 4825
IMPURITIES
Residue on Ignition, Organic Impurities, and *Enantiomeric Purity*
SPECIFIC TESTS
Loss on Drying

Losartan Potassium and Hydrochlorothiazide Tablets, 4913
PERFORMANCE TESTS
Dissolution
ADDITIONAL REQUIREMENTS
Labeling (added)

Memantine Hydrochloride Tablets, 5000
IMPURITIES
Limit of Memantine–Lactose Adduct

Methocarbamol Tablets, 5079
IMPURITIES

Methylene Blue, 5105

Metoprolol Fumarate, 5135
DEFINITION
IDENTIFICATION
Test B
ASSAY
IMPURITIES
Organic Impurities
SPECIFIC TESTS
Melting Range or Temperature (deleted)
ADDITIONAL REQUIREMENTS
Packaging and Storage and *USP Reference Standards*

Moexipril Hydrochloride, 5201
IMPURITIES
Organic Impurities

Moexipril Hydrochloride Tablets, 5203
IMPURITIES
Organic Impurities

Moxifloxacin Hydrochloride, 5240
ASSAY
IMPURITIES
Organic Impurities and *Enantiomeric Purity* (added)
SPECIFIC TESTS
Optical Rotation (deleted)

afroozpharma@yahoo.com

ADDITIONAL REQUIREMENTS
USP Reference Standards
Nicotine Polacrilex, 5347
DEFINITION
IDENTIFICATION
Infrared Absorption for Nicotine, Test A and *Infrared Absorption for Polacrilex, Test B*
ASSAY
SPECIFIC TESTS
Water Determination (deleted), *Loss on Drying* (added), and *Nicotine Release*
ADDITIONAL REQUIREMENTS
Packaging and Storage
Olopatadine Hydrochloride, 5425
IDENTIFICATION
Infrared Absorption, Test A
ASSAY
IMPURITIES
Organic Impurities
Olopatadine Hydrochloride Ophthalmic Solution, 5426
IDENTIFICATION
Test B (added)
ASSAY
IMPURITIES
Limit of Early Eluting Impurities and *Limit of Late Eluting Impurities*
Pemetrexed Disodium (new), 5588
Pemetrexed for Injection (new), 5590
Penicillin G Procaine, 5607
CHEMICAL INFORMATION
ASSAY
SPECIFIC TESTS
Content of Penicillin G and Procaine, Sterility Tests, and *pH*
ADDITIONAL REQUIREMENTS
Packaging and Storage and *USP Reference Standards*
Pentazocine and Acetaminophen Tablets, 5625
ASSAY
Pentazocin and *Acetaminophen*
IMPURITIES
4-Aminophenol in Acetaminophen-Containing Drug Products (added)
Phenoxybenzamine Hydrochloride Capsules, 5669
IDENTIFICATION
Test A and *Test B* (added)
ASSAY
PERFORMANCE TESTS
Dissolution and *Uniformity of Dosage Units*
Phenylephrine Hydrochloride Tablets, 5685
IMPURITIES
ADDITIONAL REQUIREMENTS
USP Reference Standards
Prompt Phenytoin Sodium Capsules (deleted), 5696
Pioglitazone and Metformin Hydrochloride Tablets, 5720
IDENTIFICATION
Ultraviolet Absorption, Test A
ASSAY
Polymyxin B Sulfate, 5750
IMPURITIES
Organic Impurities
SPECIFIC TESTS
Composition of Polymyxins
Potassium Gluconate, 5777
IDENTIFICATION
Test B
Potassium Gluconate Oral Solution, 5778
IDENTIFICATION
Test A
Potassium Gluconate Tablets, 5779
IDENTIFICATION
Test B
Prochlorperazine Maleate, 5849
DEFINITION
IDENTIFICATION
Test A and *Test B* (added)
ASSAY
IMPURITIES
Organic Impurities
Propafenone Hydrochloride Extended-Release Capsules, 5876
PERFORMANCE TESTS
Dissolution
IMPURITIES
Organic Impurities and *Content of Propafenone Related Compound A*
ADDITIONAL REQUIREMENTS
Labeling (added)
Protamine Sulfate, 5902
ASSAY
IMPURITIES
Elemental Impurities (deleted)
ADDITIONAL REQUIREMENTS
USP Reference Standards
Protamine Sulfate Injection, 5903
ASSAY
Quetiapine Extended-Release Tablets (new), 5937
Ribavirin Capsules, 5996
PERFORMANCE TESTS
Dissolution
Riboflavin Tablets, 6002
ASSAY
Ringer's Injection, 6019
IDENTIFICATION
Identification Tests—General, Test A; Sodium, Test B (added); and *Potassium, Test C* (added)
Secobarbital Sodium Injection (deleted), 6132
Secobarbital Sodium for Injection (deleted), 6132
Secobarbital Sodium and Amobarbital Sodium Capsules (deleted), 6133
Selamectin (new), 6133
Sodium Citrate and Citric Acid Oral Solution, 6186
IDENTIFICATION
Test A and *Identification Tests—General, Test D*
ASSAY
Sodium, Sodium Citrate, and *Citric Acid*
Sodium Hypochlorite Solution, 6192
IDENTIFICATION
Test B and *Test C* (deleted)
ASSAY
Sulfadoxine and Pyrimethamine Tablets, 6263
IDENTIFICATION
Test A
ASSAY
Tamsulosin Hydrochloride Capsules, 6320
ASSAY
Procedure 8 and *Procedure 10* (added)
PERFORMANCE TESTS
Dissolution
Tetrahydrozoline Hydrochloride, 6410
DEFINITION
IDENTIFICATION
Infrared Absorption, Test A and *Test B*
ASSAY
IMPURITIES
Ordinary Impurities (deleted) and *Organic Impurities* (added)
ADDITIONAL REQUIREMENTS
Packaging and Storage
Thiamine Hydrochloride Tablets, 6432
ASSAY
Tinidazole, 6483
DEFINITION

afroozpharma@yahoo.com

IDENTIFICATION
Test B and *Test C* (deleted)
ASSAY
IMPURITIES
Organic Impurities
SPECIFIC TESTS
Melting Range or Temperature (deleted)
Tissue Human Amnion Chorion Membrane Dehydrated (new), 6486
Valine, 6642
IMPURITIES
Related Compounds
ADDITIONAL REQUIREMENTS
USP Reference Standards

Monographs (Global Health)

Chlorhexidine Gluconate Topical Gel (new), 6779

Monographs (Dietary Supplements)

Ashwagandha Root, 6800
IDENTIFICATION
HPTLC for Articles of Botanical Origin, Test A and *HPLC, Test B*
COMPOSITION
ADDITIONAL REQUIREMENTS
USP Reference Standards
Powdered Ashwagandha Root, 6802
IDENTIFICATION
HPTLC for Articles of Botanical Origin, Test A and *HPLC, Test B*
COMPOSITION
ADDITIONAL REQUIREMENTS
USP Reference Standards
Powdered Ashwagandha Root Extract, 6804
DEFINITION
IDENTIFICATION
HPTLC for Articles of Botanical Origin, Test A and *HPLC, Test B*
COMPOSITION
ADDITIONAL REQUIREMENTS
USP Reference Standards
Citrulline (new), 6907
Crypthecodinium cohnii Oil, 6912
IDENTIFICATION
Curcuminoids, 6917
IDENTIFICATION
HPTLC for Articles of Botanical Origin, Test A and *HPLC, Test B*
COMPOSITION
CONTAMINANTS
Botanical Extracts (added)
Hesperidin (new), 7048
Japanese Honeysuckle Flower (new), 7055
Japanese Honeysuckle Flower Dry Extract (new), 7058
Japanese Honeysuckle Flower Powder (new), 7060
Rutin, 7164
IMPURITIES
Quercetin and Other Related Compounds
St. John's Wort Flowering Top, 7166
TITLE
DEFINITION
IDENTIFICATION
HPTLC for Articles of Botanical Origin, Test B
COMPOSITION
Content of Hypericin and Pseudohypericin and *Content of Hyperforin*
SPECIFIC TESTS
Loss on Drying
St. John's Wort Flowering Top Powder, 7168
TITLE
DEFINITION
IDENTIFICATION
HPTLC for Articles of Botanical Origin, Test B
COMPOSITION
Content of Hypericin and Pseudohypericin and *Content of Hyperforin*
SPECIFIC TESTS
Loss on Drying
St. John's Wort Flowering Top Dry Extract, 7169
TITLE
DEFINITION
IDENTIFICATION
HPTLC for Articles of Botanical Origin, Test A and *Thin-Layer Chromatography, Test B*
COMPOSITION
Content of Hypericin and Pseudohypericin and *Content of Hyperforin*
St. John's Wort Flowering Top Dry Extract Capsules (new), 7172
St. John's Wort Flowering Top Dry Extract Tablets (new), 7173
Sodium Ferrous Citrate (new), 7195
Tienchi Ginseng Root and Rhizome Powder Capsules (new), 7218
Tienchi Ginseng Root and Rhizome Powder Tablets (new), 7219
Tienchi Ginseng Root and Rhizome Dry Extract Capsules (new), 7223
Tienchi Ginseng Root and Rhizome Dry Extract Tablets (new), 7225
Turmeric, 7228
DEFINITION
IDENTIFICATION
Test A and *Test B*
COMPOSITION
Powdered Turmeric, 7230
DEFINITION
IDENTIFICATION
Test A and *Test B*
COMPOSITION
SPECIFIC TESTS
Articles of Botanical Origin, Foreign Organic Matter (deleted)
Powdered Turmeric Extract, 7232
IDENTIFICATION
Test A and *Test B*
COMPOSITION

afroozpharma@yahoo.com

General Notices and Requirements

Applying to Standards, Tests, Assays, and Other Specifications of the United States Pharmacopeia

1. Title and Revision 3

2. Official Status and Legal Recognition 3
2.10. Official Text 3
2.20. Official Articles 3
2.30. Legal Recognition 3

3. Conformance to Standards 3
3.10. Applicability of Standards 3
3.20. Indicating Conformance 4

4. Monographs and General Chapters 5
4.10. Monographs 5
4.20. General Chapters 5

5. Monograph Components 5
5.10. Molecular Formula 5
5.20. Added Substances 5
5.30. Description and Solubility 6
5.40. Identity 6
5.50. Assay 6
5.60. Impurities and Foreign Substances 6
5.70. Performance Tests 7
5.80. USP Reference Standards 7

6. Testing Practices and Procedures 7
6.10. Safe Laboratory Practices 7
6.20. Automated Procedures 7
6.30. Alternative and Harmonized Methods and Procedures 7
6.40. Dried, Anhydrous, Ignited, or Solvent-Free Basis 7
6.50. Preparation of Solutions 8
6.60. Units Necessary to Complete a Test 8
6.70. Reagents 8
6.80. Equipment 8

7. Test Results 9
7.10. Interpretation of Requirements 9
7.20. Rounding Rules 9

8. Terms and Definitions 9
8.10. Abbreviations 9
8.20. About 9
8.30. Alcohol Content 9
8.40. Atomic Weights 9
8.50. Blank Determinations 9
8.60. Concomitantly 10
8.70. Desiccator 10
8.80. Logarithms 10
8.90. Microbial Strain 10
8.100. Negligible 10
8.110. NLT/NMT 10
8.120. Odor 10
8.130. Percent 10
8.140. Percentage Concentrations 10
8.150. Pressure 10
8.160. Reaction Time 10
8.170. Specific Gravity 10
8.180. Temperatures 10
8.190. Time 10
8.200. Transfer 10
8.210. Vacuum 10
8.220. Vacuum Desiccator 10
8.230. Water 10
8.240. Weights and Measures 10

afroozpharma@yahoo.com

9. Prescribing and Dispensing 11
9.10 Use of Metric Units 11
9.20 Changes in Volume 12

10. Preservation, Packaging, Storage, and Labeling 12
10.10. Packaging and Storage 12
10.20. Labeling 12

afroozpharma@yahoo.com

GENERAL NOTICES AND REQUIREMENTS

The *General Notices and Requirements* section (the *General Notices*) presents the basic assumptions, definitions, and default conditions for the interpretation and application of the *United States Pharmacopeia* (*USP*) and the *National Formulary* (*NF*).

Requirements stated in these *General Notices* apply to all articles recognized in the *USP* and *NF* (the "compendia") and to all general chapters unless specifically stated otherwise.

1. TITLE AND REVISION

The full title of this publication (consisting of four volumes and including its *Supplements*), is *The Pharmacopeia of the United States of America*, Fortieth Revision and the *National Formulary*, Thirty-Fifth Edition. These titles may be abbreviated to *USP 40*, to *NF 35*, and to *USP 40–NF 35*. The *United States Pharmacopeia*, Fortieth Revision, and the *National Formulary*, Thirty-Fifth Edition, supersede all earlier revisions. Where the terms "*USP*," "*NF*," or "*USP–NF*" are used without further qualification during the period in which these compendia are official, they refer only to *USP 40*, *NF 35*, and any *Supplement(s)* thereto. The same titles, with no further distinction, apply equally to print or electronic presentation of these contents. Although *USP* and *NF* are published under one cover and share these *General Notices*, they are separate compendia.

This revision is official beginning May 1, 2017 unless otherwise indicated in specific text.

Supplements to *USP* and *NF* are published periodically.

Accelerated Revisions, published periodically on the *Official Text* section of USP's website (http://www.usp.org/usp-nf/official-text), are designed to make revisions official more quickly than through the routine process for publishing standards in the *USP–NF*. *Interim Revision Announcements* are Accelerated Revisions to *USP* and *NF* that contain official revisions and their effective dates.

Revision Bulletins are Accelerated Revisions to official text or postponements that require expedited publication. They generally are official immediately unless otherwise specified in the *Revision Bulletin*.

Errata are Accelerated Revisions representing corrections to items erroneously published. Announcements of the availability of new USP Reference Standards and announcements of tests or procedures that are held in abeyance pending availability of required USP Reference Standards are also available on the "Official Text" tab of USP's website.

2. OFFICIAL STATUS AND LEGAL RECOGNITION

2.10. Official Text

Official text of the *USP* and *NF* is published in the *USP–NF Online* (www.uspnf.com) in the edition identified as "CURRENTLY OFFICIAL" and in Accelerated Revisions that supersede the *USP–NF Online* as described below.

Routine revisions are published in the *USP–NF Online* and become official on the date indicated, usually six months after publication. Accelerated Revisions supersede the *USP–NF Online* and become official on the date indicated. Links to Accelerated Revisions on the USP website can be found in any superseded monograph or general chapter in the *USP–NF Online*.

Print and USB flash drive versions of the *USP* and *NF* also are available. Routine revisions are provided with the same timing as the *USP–NF Online*. Official text published in *Supplements* supersedes that in the previously published print or USB flash drive versions of *USP–NF*. These versions also are superseded by Accelerated Revisions as described above.

In the event of any disparity between the print or USB flash drive versions and the *USP–NF Online*, the *USP–NF Online* will be deemed to apply.

2.20. Official Articles

An *official article* is an article that is recognized in *USP* or *NF*. An article is deemed to be recognized and included in a compendium when a monograph for the article is published in the compendium and an official date is generally or specifically assigned to the monograph.

The title specified in a monograph is the *official title* for such article. Other names considered to be synonyms of the official titles may not be used as substitutes for official titles.

Official articles include both *official substances* and *official products*. An *official substance* is a drug substance, excipient, dietary ingredient, other ingredient, or component of a finished device for which the monograph title includes no indication of the nature of the finished form.

An *official product* is a drug product, dietary supplement, compounded preparation, or finished device for which a monograph is provided.

2.30. Legal Recognition

The *USP* and *NF* are recognized in the laws and regulations of many countries throughout the world. Regulatory authorities may enforce the standards presented in the *USP* and *NF*, but because recognition of the *USP* and *NF* may vary by country, users should understand applicable laws and regulations. In the United States under the Federal Food, Drug, and Cosmetic Act (FDCA), both *USP* and *NF* are recognized as official compendia. A drug with a name recognized in *USP–NF* must comply with compendial identity standards or be deemed adulterated, misbranded, or both. See, e.g., FDCA § 501(b) and 502(e)(3)(b); also FDA regulations, 21 CFR § 299.5(a&b). To avoid being deemed adulterated, such drugs must also comply with compendial standards for strength, quality, and purity, unless labeled to show all respects in which the drug differs. See, e.g., FDCA § 501(b) and 21 CFR § 299.5(c). In addition, to avoid being deemed misbranded, drugs recognized in *USP–NF* must also be packaged and labeled in compliance with compendial standards. See FDCA § 502(g).

A dietary supplement represented as conforming to specifications in *USP* will be deemed a misbranded food if it fails to so conform. See FDCA § 403(s)(2)(D).

Enforcement of *USP* standards is the responsibility of FDA and other government authorities in the U.S. and elsewhere. USP has no role in enforcement.

Change to read:

3. CONFORMANCE TO STANDARDS

3.10. Applicability of Standards

Standards for an article recognized in the compendia (*USP–NF*) are expressed in the article's monograph, applicable general chapters, and *General Notices*. The identity, strength, quality, and purity of an article are determined by the official tests, procedures, and acceptance criteria, and other requirements incorporated in the monograph, in applicable general chapters, or in the *General Notices*. "Applicable general chapters" means general chapters numbered

afroozpharma@yahoo.com

below 1000 or above 2000 that are made applicable to an article through reference in *General Notices*, a monograph, or another applicable general chapter numbered below 1000. Where the requirements of a monograph differ from the requirements specified in these *General Notices* or an applicable general chapter, the monograph requirements apply and supersede the requirements of the *General Notices* or applicable general chapters, whether or not the monograph explicitly states the difference.

General chapters numbered 1000 to 1999 are for informational purposes only. They contain no mandatory tests, assays, or other requirements applicable to any official article, regardless of citation in a general chapter numbered below 1000, a monograph, or these *General Notices*. General chapters numbered above 2000 apply only to articles that are intended for use as dietary ingredients and dietary supplements. General chapter citations in *NF* monographs refer to *USP* general chapters.

Early adoption of revised standards in advance of the official date is allowed by USP unless specified otherwise at the time of publication. Where revised standards for an existing article have been published as final approved "official text" (as approved in section *2.10 Official Text*) but have not yet reached the official date (six months after publication, unless otherwise specified; see "official date", section *2.20 Official Articles*), compliance with the revised standard shall not preclude a finding or indication of conformance with compendial standards, unless USP specifies otherwise by prohibiting early adoption in a particular standard.

The standards in the relevant monograph, general chapter(s), and *General Notices* apply at all times in the life of the article from production to expiration. It is also noted that the manufacturer's specifications, and manufacturing practices (e.g., Quality by Design, Process Analytical Technology, and Real Time Release Testing initiatives), generally are followed to ensure that the article will comply with compendial standards until its expiration date, when stored as directed. Every compendial article in commerce shall be so constituted that when examined in accordance with these assays and test procedures, it meets all applicable pharmacopeial requirements (*General Notices*, monographs, and general chapters). Thus, any official article is expected to meet the compendial standards if tested, and any official article actually tested as directed in the relevant monograph must meet such standards to demonstrate compliance.

Some tests, such as those for Dissolution and Uniformity of Dosage Units, require multiple dosage units in conjunction with a decision scheme. These tests, albeit using a number of dosage units, are in fact one determination. These procedures should not be confused with statistical sampling plans. The similarity to statistical procedures may seem to suggest an intent to make inference to some larger group of units, but in all cases, statements about whether the compendial standard is met apply only to the units tested. Repeats, replicates, statistical rejection of outliers, or extrapolations of results to larger populations, as well as the necessity and appropriate frequency of batch testing, are neither specified nor proscribed by the compendia; such decisions are based on the objectives of the testing. Frequency of testing and sampling are left to the preferences or direction of those performing compliance testing, and other users of *USP–NF*, including manufacturers, buyers, or regulatory authorities.

Official products are prepared according to recognized principles of good manufacturing practice and from ingredients that meet *USP* or *NF* standards, where standards for such ingredients exist (for dietary supplements, see section *3.10.20*).

Official substances are prepared according to recognized principles of good manufacturing practice and from ingredients complying with specifications designed to ensure that the resultant substances meet the requirements of the compendial monographs.

3.10.10. Applicability of Standards to Drug Products, Drug Substances, and Excipients

The applicable *USP* or *NF* standard applies to any article marketed in the United States that (1) is recognized in the compendium and (2) is intended or labeled for use as a drug or as an ingredient in a drug. Such articles (drug products, drug substances, and excipients) include both human drugs (whether dispensed by prescription, "over the counter," or otherwise), as well as animal drugs. The applicable standard applies to such articles whether or not the added designation "USP" or "NF" is used. The standards apply equally to articles bearing the official titles or names derived by transposition of the definitive words of official titles or transposition in the order of the names of two or more active ingredients in official titles, or where there is use of synonyms with the intent or effect of suggesting a significant degree of identity with the official title or name.

3.10.20. Applicability of Standards to Medical Devices, Dietary Supplements, and Their Components and Ingredients

An article recognized in *USP* or *NF* shall comply with the compendial standards if the article is a medical device, component intended for a medical device, dietary supplement, dietary ingredient, or other ingredient that is intended for incorporation into a dietary supplement, and is labeled as conforming to the *USP* or *NF*.

Generally, dietary supplements are prepared from ingredients that meet *USP*, *NF*, or *Food Chemicals Codex* standards. Where such standards do not exist, substances may be used in dietary supplements if they have been shown to be of acceptable food grade quality using other suitable procedures.

▲3.10.30. Applicability of Standards to the Practice of Compounding (New)

USP compounding practice standards, *Pharmaceutical Compounding—Nonsterile Preparations* ⟨795⟩ and *Pharmaceutical Compounding—Sterile Preparations* ⟨797⟩, as appropriate, apply to compounding practice or activity regardless of whether a monograph exists for the compounded preparation or these chapters are referenced in such a monograph. In the United States, ⟨795⟩ and ⟨797⟩ are not applicable to drugs compounded by entities registered with FDA as outsourcing facilities as defined by FDCA § 503B, because such facilities are required to comply with FDA's current good manufacturing practice requirements. Compounded preparations, including drug products compounded by outsourcing facilities, may also be subject to applicable monographs; see section *2.20 Official Articles* and section *4.10 Monographs*.▲USP40

3.20. Indicating Conformance

A drug product, drug substance, or excipient may use the designation "USP" or "NF" in conjunction with its official title or elsewhere on the label only when (1) a monograph

afroozpharma@yahoo.com

is provided in the specified compendium and (2) the article complies with the identity prescribed in the specified compendium.

When a drug product, drug substance, compounded preparation, or excipient differs from the relevant *USP* or *NF* standard of strength, quality, or purity, as determined by the application of the tests, procedures, and acceptance criteria set forth in the relevant compendium, its difference shall be plainly stated on its label.

When a drug product, drug substance, compounded preparation, or excipient fails to comply with the identity prescribed in *USP* or *NF* or contains an added substance that interferes with the prescribed tests and procedures, the article shall be designated by a name that is clearly distinguishing and differentiating from any name recognized in *USP* or *NF*.

A medical device, dietary supplement, or ingredient or component of a medical device or dietary supplement may use the designation "USP" or "NF" in conjunction with its official title or elsewhere on the label only when (1) a monograph is provided in the specified compendium and (2) the article complies with the monograph standards and other applicable standards in ▲that▲*USP40* compendium.

The designation "USP" or "NF" on the label may not and does not constitute an endorsement by USP and does not represent assurance by USP that the article is known to comply with the relevant standards. USP may seek legal redress if an article purports to be or is represented as an official article in one of USP's compendia and such claim is determined by USP not to be made in good faith.

The designation "USP–NF" may be used on the label of an article provided that the label also bears a statement such as "Meets *NF* standards as published by USP," indicating the particular compendium to which the article purports to apply.

When the letters "USP," "NF," or "USP–NF" are used on the label of an article to indicate compliance with compendial standards, the letters shall appear in conjunction with the official title of the article. The letters are not to be enclosed in any symbol such as a circle, square, etc., and shall appear in capital letters.

If a dietary supplement does not comply with all applicable compendial requirements but contains one or more dietary ingredients or other ingredients that are recognized in *USP* or *NF*, the individual ingredient(s) may be designated as complying with *USP* or *NF* standards or being of *USP* or *NF* quality provided that the designation is limited to the individual ingredient(s) and does not suggest that the dietary supplement complies with *USP* standards.

4. MONOGRAPHS AND GENERAL CHAPTERS

4.10. Monographs

Monographs set forth the article's name, definition, specification, and other requirements related to packaging, storage, and labeling. The specification consists of tests, procedures, and acceptance criteria that help ensure the identity, strength, quality, and purity of the article. For general requirements relating to specific monograph sections, see section *5 Monograph Components*.

Because monographs may not provide standards for all relevant characteristics, some official substances may conform to the *USP* or *NF* standard but differ with regard to nonstandardized properties that are relevant to their use in specific preparations. To assure substitutability in such instances, users may wish to ascertain functional equivalence or determine such characteristics before use.

4.10.10. Applicability of Test Procedures

A single monograph may include more than one test, procedure, and/or acceptance criterion for the same attribute. Unless otherwise specified in the monograph, all tests are requirements. In some cases, monograph instructions allow the selection of tests that reflect attributes of different manufacturers' articles, such as different polymorphic forms, impurities, hydrates, and dissolution. Monograph instructions indicate the tests, procedures, and/or acceptance criteria to be used and the required labeling.

The order in which the tests are listed in the monograph is based on the order in which they are approved by the relevant Expert Committee for inclusion in the monograph. Test 1 is not necessarily the test for the innovator or for the reference product. Depending on monograph instructions, a labeling statement is not typically required if Test 1 is used.

4.10.20. Acceptance Criteria

The acceptance criteria allow for analytical error, for unavoidable variations in manufacturing and compounding, and for deterioration to an extent considered acceptable under practical conditions. The existence of compendial acceptance criteria does not constitute a basis for a claim that an official substance that more nearly approaches 100 percent purity "exceeds" compendial quality. Similarly, the fact that an article has been prepared to tighter criteria than those specified in the monograph does not constitute a basis for a claim that the article "exceeds" the compendial requirements.

An official product shall be formulated with the intent to provide 100 percent of the quantity of each ingredient declared on the label. Where the minimum amount of a substance present in a dietary supplement is required by law to be higher than the lower acceptance criterion allowed for in the monograph, the upper acceptance criterion contained in the monograph may be increased by a corresponding amount.

The acceptance criteria specified in individual monographs and in the general chapters for compounded preparations are based on such attributes of quality as might be expected to characterize an article compounded from suitable bulk drug substances and ingredients, using the procedures provided or recognized principles of good compounding practice, as described in these compendia.

4.20. General Chapters

Each general chapter is assigned a number that appears in angle brackets adjacent to the chapter name (e.g., *Chromatography* ⟨621⟩). General chapters may contain the following:

- Descriptions of tests and procedures for application through individual monographs,
- Descriptions and specifications of conditions and practices for pharmaceutical compounding,
- General information for the interpretation of the compendial requirements,
- Descriptions of general pharmaceutical storage, dispensing, and packaging practices, or
- General guidance to manufacturers of official substances or official products.

When a general chapter is referenced in a monograph, acceptance criteria may be presented after a colon.

Some chapters may serve as introductory overviews of a test or of analytical techniques. They may reference other general chapters that contain techniques, details of the procedures, and, at times, acceptance criteria.

Change to read:

5. MONOGRAPH COMPONENTS

5.10. Molecular Formula

The use of the molecular formula for the active ingredient(s) named in defining the required strength of a compendial article is intended to designate the chemical entity or entities, as given in the complete chemical name of the article, having absolute (100 percent) purity.

5.20. Added Substances

Added substances are presumed to be unsuitable for inclusion in an official article and therefore prohibited, if their presence impairs the bioavailability, therapeutic efficacy, or safety of the official article; or they interfere with the assays and tests prescribed for determining compliance with the

afroozpharma@yahoo.com

compendial standards (see section *3.20 Indicating Conformance*).

The air in a container of an official article may, where appropriate, be evacuated or be replaced by carbon dioxide, helium, argon, or nitrogen, or by a mixture of these gases. The use of such gas need not be declared in the labeling.

5.20.10. Added Substances in Official Substances

Official substances may contain only the specific added substances that are permitted by the individual monograph. Such added substances shall not exceed the quantity required for providing their intended effect. Where such addition is permitted, the label shall indicate the name(s) and amount(s) of any added substance(s).

5.20.20. Added Substances (Excipients and Ingredients) in Official Products

Suitable substances and excipients such as antimicrobial agents, pharmaceutical bases, carriers, coatings, flavors, preservatives, stabilizers, and vehicles may be added to an official product to enhance its stability, usefulness, or elegance, or to facilitate its preparation, unless otherwise specified in the individual monograph.

Added substances and excipients employed solely to impart color may be incorporated into official products other than those intended for parenteral or ophthalmic use, in accordance with the regulations pertaining to the use of colors issued by the U.S. Food and Drug Administration (FDA), provided such added substances or excipients are otherwise appropriate in all respects. (See also ▲*Injections and Implanted Drugs Products* ⟨1⟩, *Product Quality Tests Common to Parenteral Dosage Forms, Specific Tests, Vehicles and added substances, Added substances.*)▲USP40

The proportions of the substances constituting the base in ointment and suppository products and preparations may be varied to maintain a suitable consistency under different climatic conditions, provided that the concentrations of active ingredients are not varied and provided that the bioavailability, therapeutic efficacy, and safety of the preparation are not impaired.

5.20.20.1. In Compounded Preparations

Compounded preparations for which a complete composition is given shall contain only the ingredients named in the formulas unless specifically exempted herein or in the individual monograph. Deviation from the specified processes or methods of compounding, although not from the ingredients or proportions thereof, may occur provided that the finished preparation conforms to the relevant standards and to preparations produced by following the specified process.

Where a monograph for a compounded preparation calls for an ingredient in an amount expressed on the dried basis, the ingredient need not be dried before use if due allowance is made for the water or other volatile substances present in the quantity taken.

Specially denatured alcohol formulas are available for use in accordance with federal statutes and regulations of the Internal Revenue Service. A suitable formula of specially denatured alcohol may be substituted for Alcohol in the manufacture of official preparations intended for internal or topical use, provided that the denaturant is volatile and does not remain in the finished product. A preparation that is intended for topical application to the skin may contain specially denatured alcohol, provided that the denaturant is either a usual ingredient in the preparation or a permissible added substance; in either case the denaturant shall be identified on the label of the topical preparation. Where a process is given in the individual monograph, any preparation compounded using denatured alcohol shall be identical to that prepared by the monograph process.

5.20.20.2. In Dietary Supplements

Additional ingredients may be added to dietary supplement products provided that the additional ingredients: (1) comply with applicable regulatory requirements; and (2) do not interfere with the assays and tests prescribed for determining compliance with compendial standards.

5.30. Description and Solubility

Only where a quantitative solubility test is given in a monograph and is designated as such is it a test for purity.

A monograph may include information regarding the article's description. Information about an article's "description and solubility" also is provided in the reference table *Description and Relative Solubility of USP and NF Articles*. The reference table merely denotes the properties of articles that comply with monograph standards. The reference table is intended primarily for those who use, prepare, and dispense drugs and/or related articles. Although the information provided in monographs and the information in the reference table may indirectly assist in the preliminary evaluation of an article, it is not intended to serve as a standard or test for purity.

The approximate solubility of a compendial substance is indicated by one of the following descriptive terms:

Descriptive Term	Parts of Solvent Required for 1 Part of Solute
Very soluble	Less than 1
Freely soluble	From 1 to 10
Soluble	From 10 to 30
Sparingly soluble	From 30 to 100
Slightly soluble	From 100 to 1,000
Very slightly soluble	From 1,000 to 10,000
Practically insoluble, or Insoluble	Greater than or equal to 10,000

5.40. Identity

A compendial test titled *Identity* or *Identification* is provided as an aid in verifying the identity of articles as they are purported to be, e.g., those taken from labeled containers, and to establish whether it is the article named in *USP–NF*. The *Identity* or *Identification* test for a particular article may consist of one or more procedures. When a compendial test for *Identity* or *Identification* is undertaken, all requirements of all specified procedures in the test must be met to satisfy the requirements of the test. Failure of an article to meet all the requirements of a prescribed *Identity* or *Identification* test (i.e., failure to meet the requirements of all of the specified procedures that are components of that test) indicates that the article is mislabeled and/or adulterated.

5.50. Assay

Assay tests for compounded preparations are not intended for evaluating a compounded preparation before dispensing, but instead are intended to serve as the official test in the event of a question or dispute regarding the preparation's conformance to official standards.

5.50.10. Units of Potency (Biological)

For substances that cannot be completely characterized by chemical or physical means or that need confirmation of functionality or tertiary structure, it may be necessary to express quantities of biological activity in units of biological potency, each defined by an authoritative, designated reference standard. In cases where international reference materials have been discontinued, international units of potency may be defined in terms of molecular mass, such as in the cases of vitamins A, D, and E.

Where available, World Health Organization (WHO) international biological standards define the International Units (IU). *USP* monographs refer to the units assigned by USP Reference Standards either directly as International Units (IU) or as "USP Units." For some biological products, units of potency are value assigned against a corresponding U.S. Standard established by FDA, whether or not International Units or USP Units have been defined (see *Biologics* ⟨1041⟩). Note that product-related labeling, e.g., on containers, need not use the full phrase "USP [product name] Units" that

afroozpharma@yahoo.com

appears in many *USP* monograph labeling sections. The term "USP Units" can be used on product labeling consistent with USP compendial requirements, provided it is clear from the context that the volume is stated in terms of USP [product name] Units. In such circumstances it should be clear that "USP Units" and "USP [product name] Units" share the same meaning.

5.60. Impurities and Foreign Substances

Tests for the presence of impurities and foreign substances are provided to limit such substances to amounts that are unobjectionable under conditions in which the article is customarily employed (see also *Impurities in Drug Substances and Drug Products* ⟨1086⟩).

Nonmonograph tests and acceptance criteria suitable for detecting and controlling impurities that may result from a change in the processing methods or that may be introduced from external sources should be employed in addition to the tests provided in the individual monograph, where the presence of the impurity is inconsistent with applicable good manufacturing practices or good pharmaceutical practices.

5.60.10. Other Impurities in *USP* and *NF* Articles

If a *USP* or *NF* monograph includes an assay or organic impurity test based on chromatography, other than a test for residual solvents, and that monograph procedure does not detect an impurity present in the substance, the amount and identity of the impurity, where both are known, shall be stated in the labeling (certificate of analysis) of the official substance, under the heading *Other Impurity(ies)*.

The presence of any unlabeled other impurity in an official substance is a variance from the standard if the content is 0.1% or greater. The sum of all *Other Impurities* combined with the monograph-detected impurities may not exceed 2.0% (see *Ordinary Impurities* ⟨466⟩), unless otherwise stated in the monograph.

The following categories of drug substances are excluded from *Other Impurities* requirements:

- Fermentation products and semi-synthetics derived therefrom,
- Radiopharmaceuticals,
- Biologics,
- Biotechnology-derived products,
- Peptides,
- Herbals, and
- Crude products of animal or plant origin.

Any substance known to be toxic shall not be listed under *Other Impurities*.

5.60.20. Residual Solvents in *USP* and *NF* Articles

All *USP* and *NF* articles are subject to relevant control of residual solvents, even when no test is specified in the individual monograph. If solvents are used during production, they must be of suitable quality. In addition, the toxicity and residual level of each solvent shall be taken into consideration, and the solvents limited according to the principles defined and the requirements specified in *Residual Solvents* ⟨467⟩, using the general methods presented therein or other suitable methods.

5.60.30. Elemental Impurities in USP Drug Products and Dietary Supplements

Effective January 1, 2018, elemental impurities will be controlled in official drug products according to the principles defined and requirements specified in *Elemental Impurities—Limits* ⟨232⟩. Effective January 1, 2018, elemental contaminants are controlled in official dietary supplements according to the principles defined and requirements specified in *Elemental Contaminants in Dietary Supplements* ⟨2232⟩. Also effective January 1, 2018, *Heavy Metals* ⟨231⟩ will be omitted and all references to it in general chapters and monographs will be deleted. Early adoption of the requirements in ⟨232⟩ and ⟨2232⟩ are permitted by USP, and if ⟨232⟩ or ⟨2232⟩, as applicable, is fully implemented with respect to a particular drug product or dietary supplement in advance of the January 1, 2018 date, that product and its ingredients will no longer need to comply with applicable ⟨231⟩ requirements to be considered by USP to be in conformance with *USP–NF* requirements.

5.70. Performance Tests

Where content uniformity determinations have been made using the same analytical methodology specified in the *Assay*, with appropriate allowances made for differences in sample preparation, the average of all of the individual content uniformity determinations may be used as the *Assay* value.

5.80. USP Reference Standards

USP Reference Standards are authentic specimens that have been approved as suitable for use as comparison standards in *USP* or *NF* tests and assays. (See *USP Reference Standards* ⟨11⟩.) Where *USP* or *NF* tests or assays call for the use of a USP Reference Standard, only those results obtained using the specified USP Reference Standard are conclusive. Where a procedure calls for the use of a compendial article rather than for a USP Reference Standard as a material standard of reference, a substance meeting all of the compendial monograph requirements for that article shall be used. If any new *USP* or *NF* standard requires the use of a new USP Reference Standard that is not yet available, that portion of the standard containing the requirement shall not be official until the specified USP reference material is available.

Unless a Reference Standard label bears a specific potency or content, assume the Reference Standard is 100.0% pure in the official application. Unless otherwise directed in the procedure in the individual monograph or in a general chapter, USP Reference Standards are to be used in accordance with the instructions on the label of the Reference Standard.

Change to read:

6. TESTING PRACTICES AND PROCEDURES

6.10. Safe Laboratory Practices

In performing compendial procedures, safe laboratory practices shall be followed, including precautionary measures, protective equipment, and work practices consistent with the chemicals and procedures used. Before undertaking any procedure described in the compendia, the analyst should be aware of the hazards associated with the chemicals and the techniques and means of protecting against them. These compendia are not designed to describe such hazards or protective measures.

6.20. Automated Procedures

Automated and manual procedures employing the same basic chemistry are considered equivalent.

6.30. Alternative and Harmonized Methods and Procedures

Alternative methods and/or procedures may be used if they provide advantages in terms of accuracy, sensitivity, precision, selectivity, or adaptability to automation or computerized data reduction, or in other special circumstances. Such alternative procedures and methods shall be validated as described in *Validation of Compendial Procedures* ⟨1225⟩ and must be shown to give equivalent or better results. Only those results obtained by the methods and procedures given in the ▲compendia▲*USP40* are conclusive.

Alternative procedures should be submitted to USP for evaluation as a potential replacement or addition to the standard (see section *4.10 Monographs*).

Certain general chapters contain a statement that the text in question is harmonized with the corresponding text of the *European Pharmacopoeia* and/or the *Japanese Pharmacopoeia* and that these texts are interchangeable. Therefore, if a substance or preparation is found to comply with a requirement using an interchangeable method or procedure from one of these pharmacopeias, it should comply with the requirements of the *USP–NF*. When a difference appears, or in the event of dispute, only the result obtained by the method and/or procedure given in the *USP–NF* is conclusive.

afroozpharma@yahoo.com

6.40. Dried, Anhydrous, Ignited, or Solvent-Free Basis

All calculations in the compendia assume an "as-is" basis unless otherwise specified.

Test procedures may be performed on the undried or unignited substance and the results calculated on the dried, anhydrous, or ignited basis, provided a test for *Loss on Drying*, or *Water Determination*, or *Loss on Ignition*, respectively, is given in the monograph. Where the presence of moisture or other volatile material may interfere with the procedure, previous drying of the substance is specified in the individual monograph and is obligatory.

The term "solvent-free" signifies that the calculation shall be corrected for the presence of known solvents as determined using the methods described in ⟨467⟩ unless a test for limit of organic solvents is provided in the monograph.

The term "previously dried" without qualification signifies that the substance shall be dried as directed under *Loss on Drying* ⟨731⟩ or *Water Determination* ⟨921⟩ (gravimetric determination).

Where drying in vacuum over a desiccant is directed, a vacuum desiccator, a vacuum drying pistol, or other suitable vacuum drying apparatus shall be used.

6.40.10. Ignite to Constant Weight

"Ignite to constant weight" means that ignition shall be continued at 800 ± 25°, unless otherwise indicated, until two consecutive weighings, the second of which is taken after an additional period appropriate to the nature and quantity of the residue, do not differ by more than 0.50 mg per g of substance taken.

6.40.20. Dried to Constant Weight

"Dried to constant weight" means that drying shall be continued until two consecutive weighings, the second of which is taken after an additional drying period appropriate to the nature and quantity of the residue, do not differ by more than 0.50 mg per g of substance taken.

6.50. Preparation of Solutions

6.50.10. Filtration

Where a procedure gives direction to "filter" without further qualification, the liquid shall be passed through suitable filter paper or equivalent device until the filtrate is clear. Due to the possibility of filter effects, the initial volumes of a filtrate may be discarded.

6.50.20. Solutions

Unless otherwise specified, all solutions shall be prepared with Purified Water. Solutions for quantitative measures shall be prepared using accurately weighed or accurately measured analytes (see section *8.20 About*).

An expression such as "(1 in 10)" means that 1 part *by volume* of a liquid shall be diluted with, or 1 part *by weight* of a solid shall be dissolved in, a sufficient quantity of the diluent or solvent to make the volume of the finished solution 10 parts *by volume*. An expression such as "(20:5:2)" means that the respective numbers of parts, by volume, of the designated liquids shall be mixed, unless otherwise indicated.

6.50.20.1. Adjustments to Solutions

When a specified concentration is called for in a procedure, a solution of other normality or molarity may be used, provided that allowance is made for the difference in concentration and that the change does not increase the error of measurement.

Proportionately larger or smaller quantities than the specified weights and volumes of assay or test substances and Reference Standards may be taken, provided the measurement is made with at least equivalent accuracy.

Unless otherwise indicated, analyte concentrations shall be prepared to within ten percent (10%) of the indicated value. In the case in which a procedure is adapted to the working range of an instrument, solution concentrations may differ from the indicated value by more than ten percent (10%), with appropriate changes in associated calculations. Any changes shall fall within the validated range of the instrument.

When adjustment of pH is indicated with either an acid or base and the concentration is not indicated, appropriate concentrations of that acid or base may be used.

6.50.20.2. Test Solutions

Information on Test Solutions (TS) is provided in the *Test Solutions* portion of the *Reagents, Indicators, and Solutions* section of the *USP–NF*. Use of an alternative Test Solution or a change in the Test Solution used may require validation.

6.50.20.3. Indicator Solutions

Where a procedure specifies the use of an indicator TS, approximately 0.2 mL, or 3 drops, of the solution shall be added unless otherwise directed.

6.60. Units Necessary to Complete a Test

Unless otherwise specified, a sufficient number of units to ensure a suitable analytical result shall be taken.

6.60.10. Tablets

Where the procedure of a Tablet monograph directs to weigh and finely powder not fewer than a given number of Tablets, a counted number of Tablets shall be weighed and reduced to a powder. The portion of the powdered Tablets taken shall be representative of the whole Tablets and shall, in turn, be weighed accurately.

6.60.20. Capsules

Where the procedure of a Capsule monograph gives direction to remove, as completely as possible, the contents of not fewer than a given number of the Capsules, a counted number of Capsules shall be carefully opened and the contents quantitatively removed, combined, mixed, and weighed accurately. The portion of mixed Capsules contents taken shall be representative of the contents of the Capsules and shall, in turn, be weighed accurately.

6.70. Reagents

The proper conduct of the compendial procedures and the reliability of the results depend, in part, upon the quality of the reagents used in the performance of the procedures. Unless otherwise specified, reagents conforming to the specifications set forth in the current edition of *Reagent Chemicals* published by the American Chemical Society (ACS) shall be used. Where such ACS reagent specifications are not available or where the required purity differs, compendial specifications for reagents of acceptable quality are provided (see the *Reagents, Indicators, and Solutions* section of the *USP–NF*). Reagents not covered by any of these specifications should be of a grade suitable to the proper performance of the method of assay or test involved.

Listing of these reagents, including the indicators and solutions employed as reagents, in no way implies that they have therapeutic utility; furthermore, any reference to *USP* or *NF* in their labeling shall include also the term "reagent" or "reagent grade." USP may supply reagents if they otherwise may not be generally commercially available.

6.80. Equipment

Unless otherwise specified, a specification for a definite size or type of container or apparatus in a procedure is given solely as a recommendation. Other dimensions or types may be used if they are suitable for the intended use.

6.80.10. Apparatus for Measurement

Where volumetric flasks or other exact measuring, weighing, or sorting devices are specified, this or other equipment of at least equivalent accuracy shall be employed.

6.80.10.1. Pipet/Pipette

Where a pipet/pipette is specified, a suitable buret may be substituted. Where a "to contain" pipet/pipette is specified, a suitable volumetric flask may be substituted.

6.80.10.2. Light Protection

Where low-actinic or light-resistant containers are specified, either containers specially treated to protect contents from light or clear containers that have been rendered opaque by application of a suitable coating or wrapping may be used.

afroozpharma@yahoo.com

6.80.20. Instrumental Apparatus

An instrument may be substituted for the specified instrument if the substitute uses the same fundamental principles of operation and is of equivalent or greater sensitivity and accuracy. These characteristics shall be qualified as appropriate. Where a particular brand or source of a material, instrument, or piece of equipment, or the name and address of a manufacturer or distributor, is mentioned (ordinarily in a footnote), this identification is furnished solely for informational purposes as a matter of convenience, without implication of approval, endorsement, or certification.

6.80.20.1. Chromatographic Tubes and Columns

The term "diameter" refers to internal diameter (ID).

6.80.20.2. Tubing

The term "diameter" refers to outside diameter (OD).

6.80.20.3. Steam Bath

Where use of a steam bath is directed, use actively flowing steam or another regulated heat source controlled at an equivalent temperature.

6.80.20.4. Water Bath

A water bath requires vigorously boiling water unless otherwise specified.

6.80.30. Temperature Reading Devices

Temperature reading devices suitable for pharmacopeial tests conform to specifications that are traceable to a National Institute of Standards and Technology (NIST) standard or equivalent. Temperature reading devices may be of the liquid-in-glass type or an analog or digital temperature indicator type, such as a resistance temperature device, thermistor, or thermocouple. Standardization of thermometers is performed on an established testing frequency with a temperature standard traceable to NIST. For example, refer to the current issue of American Society of Testing and Materials (ASTM) standards E1 for liquid-in-glass thermometers.

7. TEST RESULTS

7.10. Interpretation of Requirements

Analytical results observed in the laboratory (or calculated from experimental measurements) are compared with stated acceptance criteria to determine whether the article conforms to compendial requirements.

The reportable value, which often is a summary value for several individual determinations, is compared with the acceptance criteria. The reportable value is the end result of a completed measurement procedure, as documented.

Where acceptance criteria are expressed numerically herein through specification of an upper and/or lower limit, permitted values include the specified values themselves, but no values outside the limit(s). Acceptance criteria are considered significant to the last digit shown.

7.10.5. Nominal Concentrations in Equations

Where a "nominal concentration" is specified, calculate the concentration based on the label claim. In assay procedures, water correction is typically stated in the Definition and on the label of the USP Reference Standard. For other procedures, correction for assayed content, potency, or both is made prior to using the concentration in the equation provided in the monograph.

7.10.10. Equivalence Statements in Titrimetric Procedures

The directions for titrimetric procedures conclude with a statement of the weight of the analyte that is equivalent to each mL of the standardized titrant. In such an equivalence statement, the number of significant figures in the concentration of the titrant should be understood to correspond to the number of significant figures in the weight of the analyte. Corrections to calculations based on the blank determination are to be made for all titrimetric assays where appropriate (see *Titrimetry* ⟨541⟩).

7.20. Rounding Rules

The observed or calculated values shall be rounded off to the number of decimal places that is in agreement with the limit expression. Numbers should not be rounded until the final calculations for the reportable value have been completed. Intermediate calculations (e.g., slope for linearity) may be rounded for reporting purposes, but the original (not rounded) value should be used for any additional required calculations. Acceptance criteria are fixed numbers and are not rounded.

When rounding is required, consider only one digit in the decimal place to the right of the last place in the limit expression. If this digit is smaller than 5, it is eliminated and the preceding digit is unchanged. If this digit is equal to or greater than 5, it is eliminated and the preceding digit is increased by 1.

Change to read:

8. TERMS AND DEFINITIONS

8.10. Abbreviations

- RS refers to a USP Reference Standard.
- CS refers to a Colorimetric Solution.
- TS refers to a Test Solution.
- VS refers to a Volumetric Solution that is standardized in accordance with directions given in the individual monograph or in the *Reagents, Indicators, and Solutions* section of *USP–NF*.

8.20. About

"About" indicates a quantity within 10%.

If the measurement is stated to be "accurately measured" or "accurately weighed," follow the statements in *Volumetric Apparatus* ⟨31⟩ and *Balances* ⟨41⟩, respectively.

8.30. Alcohol Content

Percentages of alcohol, such as those under the heading *Alcohol Content*, refer to percentage by volume of C_2H_5OH at 15.56°. Where a formula, test, or assay calls for alcohol, ethyl alcohol, or ethanol, the *USP* monograph article Alcohol

Illustration of Rounding Numerical Values for Comparison with Requirements

Compendial Requirement	Unrounded Value	Rounded Result	Conforms
Assay limit ≥98.0%	97.96%	98.0%	Yes
	97.92%	97.9%	No
	97.95%	98.0%	Yes
Assay limit ≤101.5%	101.55%	101.6%	No
	101.46%	101.5%	Yes
	101.45%	101.5%	Yes
Limit test ≤0.02%	0.025%	0.03%	No
	0.015%	0.02%	Yes
	0.027%	0.03%	No
Limit test ≤3 ppm	3.5 ppm	4 ppm	No
	3.4 ppm	3 ppm	Yes
	2.5 ppm	3 ppm	Yes

afroozpharma@yahoo.com

shall be used. Where reference is made to "C_2H_5OH," absolute (100 percent) ethanol is intended. Where a procedure calls for dehydrated alcohol, alcohol absolute, or anhydrous alcohol, the *USP* monograph article Dehydrated Alcohol shall be used.

8.40. Atomic Weights

Atomic weights used in computing molecular weights and the factors in the assays and elsewhere are those established by the IUPAC Commission on ▲Isotopic Abundances and Atomic Weights.▲USP40

8.50. Blank Determinations

Where it is directed that "any necessary correction" be made by a blank determination, the determination shall be conducted using the same quantities of the same reagents treated in the same manner as the solution or mixture containing the portion of the substance under assay or test, but with the substance itself omitted.

8.60. Concomitantly

"Concomitantly" denotes that the determinations or measurements are to be performed in immediate succession.

8.70. Desiccator

The instruction "in a desiccator" indicates use of a tightly closed container of suitable size and design that maintains an atmosphere of low moisture content by means of a suitable desiccant such as anhydrous calcium chloride, magnesium perchlorate, phosphorus pentoxide, or silica gel. See also section *8.220 Vacuum Desiccator.*

8.80. Logarithms

Logarithms are to the base 10.

8.90. Microbial Strain

A microbial strain cited and identified by its American Type Culture Collection (ATCC) catalog number shall be used directly or, if subcultured, shall be used not more than five passages removed from the original strain.

8.100. Negligible

"Negligible" indicates a quantity not exceeding 0.50 mg.

8.110. NLT/NMT

"NLT" means "not less than." "NMT" means "not more than."

8.120. Odor

"Odorless," "practically odorless," "a faint characteristic odor," and variations thereof indicate evaluation of a suitable quantity of freshly opened material after exposure to the air for 15 minutes. An odor designation is descriptive only and should not be regarded as a standard of purity for a particular lot of an article.

8.130. Percent

"Percent" used without qualification means:

- For mixtures of solids and semisolids, percent weight in weight;
- For solutions or suspensions of solids in liquids, percent weight in volume;
- For solutions of liquids in liquids, percent volume in volume;
- For solutions of gases in liquids, percent weight in volume.

For example, a 1 percent solution is prepared by dissolving 1 g of a solid or semisolid, or 1 mL of a liquid, in sufficient solvent to make 100 mL of the solution.

8.140. Percentage Concentrations

Percentage concentrations are expressed as follows:

- *Percent Weight in Weight* (w/w) is defined as the number of g of a solute in 100 g of solution.
- *Percent Weight in Volume* (w/v) is defined as the number of g of a solute in 100 mL of solution.
- *Percent Volume in Volume* (v/v) is defined as the number of mL of a solute in 100 mL of solution.

8.150. Pressure

Pressure is determined by use of a suitable manometer or barometer calibrated in terms of the pressure exerted by a column of mercury of the stated height.

8.160. Reaction Time

Reaction time is 5 minutes unless otherwise specified.

8.170. Specific Gravity

Specific gravity is the weight of a substance in air at 25° divided by the weight of an equal volume of water at the same temperature.

8.180. Temperatures

Temperatures are expressed in centigrade (Celsius) degrees, and all measurements are made at 25° unless otherwise indicated. Where moderate heat is specified, any temperature not higher than 45° (113° F) is indicated.

8.190. Time

Unless otherwise specified, rounding rules, as described in section *7.20 Rounding Rules,* apply to any time specified.

8.200. Transfer

"Transfer" indicates a quantitative manipulation.

8.210. Vacuum

"Vacuum" denotes exposure to a pressure of less than 20 mm of mercury (2.67 kPas), unless otherwise indicated.

8.220. Vacuum Desiccator

"Vacuum desiccator" indicates a desiccator that maintains a low-moisture atmosphere at a reduced pressure of not more than 20 mm of mercury (2.67 kPas) or at the pressure designated in the individual monograph.

8.230. Water

8.230.10. Water as an Ingredient in an Official Product

As an ingredient in an official product, water meets the requirements of the appropriate water monograph in *USP* or *NF.*

8.230.20. Water in the Manufacture of Official Substances

When used in the manufacture of official substances, water shall meet the requirements for drinking water as set forth in the U.S. Environmental Protection Agency National Primary Drinking Water Regulations or in the drinking water regulations of the European Union or of Japan, or in the World Health Organization's Guidelines for Drinking Water Quality. Additional specifications may be required in monographs.

8.230.30. Water in a Compendial Procedure

When water is called for in a compendial procedure, the *USP* article Purified Water shall be used unless otherwise specified. Definitions for other types of water are provided in *Reagents, Indicators, and Solutions* and in *Water for Pharmaceutical Purposes* ⟨1231⟩.

8.240. Weights and Measures

In general, weights and measures are expressed in the International System of Units (SI) as established and revised by the *Conférence générale des poids et mesures.* For compendial purposes, the term "weight" is considered to be synonymous with "mass."

Molality is designated by the symbol *m* preceded by a number that represents the number of moles of the designated solute contained in 1 kilogram of the designated solvent.

Molarity is designated by the symbol M preceded by a number that represents the number of moles of the designated solute contained in an amount of the designated solvent that is sufficient to prepare 1 liter of solution.

Normality is designated by the symbol N preceded by a number that represents the number of equivalents of the designated solute contained in an amount of the designated solvent that is sufficient to prepare 1 liter of solution.

The symbol for degrees (°) without a qualifying unit of measure represents degrees Celsius.

Chart of Symbols and Prefixes commonly employed for SI metric units and other units:

	Units	Symbol	Notes
Length			
	meter	m	

afroozpharma@yahoo.com

	Units	Symbol	Notes
	centimeter	cm	
	millimeter	mm	
	micrometer	µm	Previously referred to as a micron
	nanometer	nm	Previously the symbol mµ (for millimicron) was used
	Ångström	Å	Equal to 0.1 nm
Mass			
	kilogram	kg	
	gram	g	
	milligram	mg	
	microgram	µg	The symbol µg is used in the *USP* and *NF* to represent micrograms, but micrograms may be represented as "mcg" for labeling and prescribing purposes. The term "gamma," symbolized by γ, frequently is used to represent micrograms in biochemical literature.
	nanogram	ng	
	picogram	pg	
	dalton	Da	Also referred to as the unified atomic mass unit and is equal to 1/12 times the mass of the free carbon 12 atom.
	kilodalton	kDa	
Time			
	second	s	
	minute	min	
	hour	h	
Volume			
	liter	L	1 L is equal to 1000 cm^3 (cubic centimeters)
	deciliter	dL	
	milliliter	mL	1 mL is equal to 1 cm^3, sometimes referred to as cc
	microliter	µL	
Temperature			
	Celsius	°C	
Amount of Substance			
	mole	mol	Historically referred to as gram-molecular weight or gram-atomic weight
	millimole	mmol	
	micromole	µmol	
	femtomole	fmol	
	equivalent	Eq	Also referred to as gram-equivalent weight. It is used in the calculation of substance concentration in units of normality. This unit is no longer preferred for use in analytical chemistry or metrology.
	milli equivalent	mEq	
	osmole	Osmol	Osmotic pressure of a solution, related to substance concentration.
	milliosmole	mOsmol	
Pressure			
	pascal	Pa	
	kilopascal	kPa	
	pounds per square inch	psi	
	millimeter of mercury	mmHg	Equal to 133.322 Pa
Electrical units			
	ampere	A	
	volt	V	
	millivolt	mV	
	hertz	Hz	Unit of frequency
	kilohertz	kHz	
	megahertz	MHz	
	electron volt	eV	
	kilo-electron volt	keV	
	mega-electron volt	MeV	
Radiation			
	becquerel	Bq	SI unit of activity for radionuclides
	kilobecquerel	kBq	
	megabecquerel	MBq	
	gigabecquerel	GBq	
	curie	Ci	Non-SI unit of activity for radionuclides
	millicurie	mCi	
	microcurie	µCi	
	nanocurie	nCi	
Other			
	acceleration due to gravity	g	Used to express rate of centrifugation
	revolutions per minute	rpm	Used to express rate of centrifugation

Selected SI Prefixes

Name	Symbol	Factor
giga	G	10^9
mega	M	10^6

General Notices

afroozpharma@yahoo.com

Selected SI Prefixes *(Continued)*

Name	Symbol	Factor
kilo	k	10^3
deci	d	10^{-1}
centi	c	10^{-2}
milli	m	10^{-3}
micro	μ	10^{-6}
nano	n	10^{-9}
pico	p	10^{-12}
femto	f	10^{-15}

9. PRESCRIBING AND DISPENSING

9.10. Use of Metric Units

Prescriptions for compendial articles shall be written to state the quantity and/or strength desired in metric units unless otherwise indicated in the individual monograph (see also section *5.50.10 Units of Potency [Biological]* above). If an amount is prescribed by any other system of measurement, only an amount that is the metric equivalent of the prescribed amount shall be dispensed. Abbreviations for the terms "Units" or "International Units" shall not be used for labeling or prescribing purposes. Apothecary unit designations on labels and labeling shall not be used.

9.20. Changes in Volume

In the dispensing of prescription medications, slight changes in volume owing to variations in room temperatures may be disregarded.

10. PRESERVATION, PACKAGING, STORAGE, AND LABELING

10.10. Packaging and Storage

All articles in *USP* or *NF* are subject to the packaging and storage requirements specified in *Packaging and Storage Requirements* ⟨659⟩, unless different requirements are provided in an individual monograph.

10.20. Labeling

All articles in *USP* or *NF* are subject to the labeling requirements specified in *Labeling* ⟨7⟩, unless different requirements are provided in an individual monograph.

afroozpharma@yahoo.com

Chapter Charts

Chart Guide—USP General Chapters[1]

Official Articles
- Chemical Medicines Drug Substances—Universal Tests: See *Chart 1a*
- Chemical Medicines Drug Substances—Specific Tests: See *Chart 1b*
- Biologics Drug Substances: See *Chart 2*
- Excipients—Universal Tests: See *Chart 3a*
- Excipients—Specific Tests: See *Chart 3b*
- Chemical Medicines Drug Products—Universal Tests: See *Chart 4a*
- Chemical Medicines Drug Products—Specific Tests: See *Chart 4b*
- Biologics Drug Products: See *Chart 5*
- Vaccines: See *Chart 6*
- Blood and Blood Products: See *Chart 7*
- Cell, Gene, and Tissue Based Products: See *Chart 8*
- Dietary Supplement Ingredients: See *Chart 11*
- Dietary Supplement Products: See *Chart 12*
- Compounding—Substance/Preparation/Practice: See *Chart 13*
- Medical Devices
  - ⟨691⟩ *Cotton*
  - ⟨861⟩ *Sutures—Diameter*
  - ⟨871⟩ *Sutures—Needle Attachment*

Generally Applicable
- Basic Elements
  - ⟨1029⟩ *Good Documentation Guidelines*
  - ⟨1039⟩ *Chemometrics*
  - ⟨1058⟩ *Analytical Instrument Qualification*
  - ⟨1097⟩ *Bulk Powder Sampling Procedures*
  - ⟨1151⟩ *Pharmaceutical Dosage Forms*
  - ⟨1224⟩ *Transfer of Analytical Procedures*
  - ⟨1225⟩ *Validation of Compendial Procedures*
  - ⟨1226⟩ *Verification of Compendial Procedures*
- Drug Product Distribution: See *Chart 9*
- Microbiology—Nonsterile Products: See *Chart 10a*
- Microbiology—Sterile Products: See *Chart 10b*

[1] This table and the *Charts 1–13* that follow are intended as a guide to the chapters in this publication. They may not be all-inclusive, and they are not intended to describe expectations for articles or limit the application of tests to any article in the *USP–NF*.

afroozpharma@yahoo.com

Chart 1a. Chemical Medicines Drug Substances—Universal Tests

Chapter	Description	Identification	Assay	Impurities		
				Organic	Inorganic	Residual Solvents
⟨7⟩ *Labeling*	♦					
⟨11⟩ *USP Reference Standards*			♦			
⟨81⟩ *Antibiotics—Microbial Assays*			♦			
⟨181⟩ *Identification Organic Nitrogenous Bases*		♦				
⟨191⟩ *Identification Tests—General*		♦				
⟨193⟩ *Identification Tests—Tetracyclines*		♦				
⟨197⟩ *Spectrophotometric Identification Test*		♦				
⟨201⟩ *Thin-Layer Chromatographic Identification Test*		♦				
⟨202⟩ *Identification of Fixed Oils by Thin-Layer Chromatography*		♦				
⟨203⟩ *High-Performance Thin-Layer Chromatography Procedure for Identification of Articles of Botanical Origin*		♦				
⟨206⟩ *Aluminum*					♦	
⟨211⟩ *Arsenic*					♦	
⟨221⟩ *Chloride and Sulfate*					♦	
⟨223⟩ *Dimethylaniline*				♦		
⟨231⟩ *Heavy Metals*					♦	
⟨232⟩ *Elemental Impurities—Limits*					♦	
⟨233⟩ *Elemental Impurities—Procedures*					♦	
⟨241⟩ *Iron*					♦	
⟨251⟩ *Lead*					♦	
⟨261⟩ *Mercury*					♦	
⟨281⟩ *Residue on Ignition*					♦	
⟨291⟩ *Selenium*					♦	
⟨351⟩ *Assay for Steroids*			♦			
⟨391⟩ *Epinephrine Assay*			♦			
⟨401⟩ *Fats and Fixed Oils*		♦				
⟨425⟩ *Iodometric Assay—Antibiotics*			♦			
⟨451⟩ *Nitrate Titration*			♦			
⟨461⟩ *Nitrogen Determination*				♦		
⟨466⟩ *Ordinary Impurities*				♦		
⟨467⟩ *Residual Solvents*						♦
⟨471⟩ *Oxygen Flask Combustion*					♦	
⟨511⟩ *Single-Steroid Assay*			♦			
⟨541⟩ *Titrimetry*		♦	♦			
⟨621⟩ *Chromatography*		♦	♦	♦		♦
⟨659⟩ *Packaging and Storage Requirements*	♦					
⟨730⟩ *Plasma Spectrochemistry*					♦	
⟨731⟩ *Loss on Drying*		♦				♦
⟨733⟩ *Loss on Ignition*					♦	
⟨735⟩ *X-Ray Fluorescence Spectrometry*		♦	♦		♦	
⟨736⟩ *Mass Spectrometry*		♦	♦			
⟨761⟩ *Nuclear Magnetic Resonance Spectroscopy*		♦				
⟨781⟩ *Optical Rotation*		♦		♦		
⟨801⟩ *Polarography*			♦	♦		
⟨852⟩ *Atomic Absorption Spectroscopy*		♦	♦	♦		
⟨853⟩ *Fluorescence Spectroscopy*		♦	♦	♦		

afroozpharma@yahoo.com

Chart 1a. Chemical Medicines Drug Substances—Universal Tests *(Continued)*

Chapter	Description	Identification	Assay	Impurities		
				Organic	Inorganic	Residual Solvents
⟨854⟩ *Mid-Infrared Spectroscopy*		♦	♦	♦		
⟨855⟩ *Nephelometry, Turbidimetry, and Visual Comparison*		♦		♦		
⟨857⟩ *Ultraviolet-Visible Spectroscopy*		♦	♦	♦		
⟨941⟩ *Characterization of Crystalline and Partially Crystalline Solids by X-Ray Powder Diffraction (XRPD)*		♦				
⟨1064⟩ *Identification of Articles of Botanical Origin by High-Performance Thin-Layer Chromatography Procedure*		♦				
⟨1086⟩ *Impurities in Drug Substances and Drug Products*				♦		
⟨1119⟩ *Near-Infrared Spectroscopy*		♦				
⟨1120⟩ *Raman Spectroscopy*		♦	♦			
⟨1223.1⟩ *Validation of Alternative Methods to Antibiotic Microbial Assays*			♦			
⟨1730⟩ *Plasma Spectrochemistry—Theory and Practice*		♦	♦			
⟨1735⟩ *X-Ray Fluorescence Spectrometry—Theory and Practice*		♦	♦			
⟨1736⟩ *Applications of Mass Spectrometry*		♦	♦			
⟨1761⟩ *Applications of Nuclear Magnetic Resonance Spectroscopy*		♦				
⟨1852⟩ *Atomic Absorption Spectroscopy—Theory and Practice*		♦	♦	♦		
⟨1853⟩ *Fluorescence Spectroscopy—Theory and Practice*		♦	♦	♦		
⟨1854⟩ *Mid-Infrared Spectroscopy—Theory and Practice*		♦	♦	♦		
⟨1857⟩ *Ultraviolet-Visible Spectroscopy—Theory and Practice*		♦	♦	♦		

Chart 1b. Chemical Medicines Drug Substances—Specific Tests

Chapter	Physicochemical Characterization	Equipment	Water Content
⟨31⟩ *Volumetric Apparatus*		♦	
⟨41⟩ *Balances*		♦	
⟨268⟩ *Porosity by Nitrogen Adsorption–Desorption*	♦		
⟨301⟩ *Acid-Neutralizing Capacity*	♦		
⟨429⟩ *Light Diffraction Measurement of Particle Size*	♦		
⟨541⟩ *Titrimetry*			♦
⟨616⟩ *Bulk Density and Tapped Density*	♦		
⟨631⟩ *Color and Achromicity*	♦		
⟨641⟩ *Completeness of Solution*	♦		
⟨651⟩ *Congealing Temperature*	♦		
⟨695⟩ *Crystallinity*	♦		
⟨699⟩ *Density of Solids*	♦		
⟨721⟩ *Distilling Range*	♦		
⟨731⟩ *Loss on Drying*	♦		♦
⟨735⟩ *X-Ray Fluorescence Spectrometry*	♦		
⟨741⟩ *Melting Range or Temperature*	♦		
⟨761⟩ *Nuclear Magnetic Resonance Spectroscopy*	♦		
⟨776⟩ *Optical Microscopy*	♦		
⟨781⟩ *Optical Rotation*	♦		

afroozpharma@yahoo.com

Chart 1b. Chemical Medicines Drug Substances—Specific Tests *(Continued)*

Chapter	Physicochemical Characterization	Equipment	Water Content
⟨782⟩ *Vibrational Circular Dichroism Spectroscopy*	◆		
⟨785⟩ *Osmolality and Osmolarity*	◆		
⟨786⟩ *Particle Size Distribution Estimation by Analytical Sieving*	◆		
⟨791⟩ *pH*	◆		
⟨811⟩ *Powder Fineness*	◆		
⟨831⟩ *Refractive Index*	◆		
⟨841⟩ *Specific Gravity*	◆		
⟨846⟩ *Specific Surface Area*	◆		
⟨881⟩ *Tensile Strength*	◆		
⟨891⟩ *Thermal Analysis*			◆
⟨911⟩ *Viscosity—Capillary Methods*	◆		
⟨912⟩ *Viscosity—Rotational Methods*	◆		
⟨913⟩ *Viscosity—Rolling Ball Method*	◆		
⟨921⟩ *Water Determination*			◆
⟨941⟩ *Characterization of Crystalline and Partially Crystalline Solids by X-Ray Powder Diffraction (XRPD)*	◆		
⟨1051⟩ *Cleaning Glass Apparatus*		◆	
⟨1119⟩ *Near-Infrared Spectroscopy*	◆		
⟨1120⟩ *Raman Spectroscopy*	◆		
⟨1171⟩ *Phase-Solubility Analysis*	◆		
⟨1251⟩ *Weighing on an Analytical Balance*		◆	
⟨1730⟩ *Plasma Spectrochemistry—Theory and Practice*	◆		
⟨1735⟩ *X-Ray Fluorescence Spectrometry—Theory and Practice*	◆		
⟨1761⟩ *Applications of Nuclear Magnetic Resonance Spectroscopy*	◆		
⟨1782⟩ *Vibrational Circular Dichroism Spectroscopy—Theory and Practice*	◆		
⟨1911⟩ *Rheometry*	◆		

Chart 2. Biologics Drug Substances

Chapter	Description	Identification	Safety	Assay	Physicochemical	Equipment	Impurities		Characterization
							Process Related	Product Related	
⟨7⟩ *Labeling*	◆								
⟨11⟩ *USP Reference Standards*		◆	◆	◆	◆		◆	◆	
⟨31⟩ *Volumetric Apparatus*						◆			
⟨41⟩ *Balances*						◆			
⟨61⟩ *Microbiological Examination of Nonsterile Products: Microbial Enumeration Tests*			◆						
⟨63⟩ *Mycoplasma Tests*			◆				◆		
⟨71⟩ *Sterility Tests*			◆						
⟨81⟩ *Antibiotics—Microbial Assays*							◆		
⟨85⟩ *Bacterial Endotoxins Test*			◆						
⟨87⟩ *Biological Reactivity Tests, In Vitro*			◆						
⟨88⟩ *Biological Reactivity Tests, In Vivo*			◆						
⟨111⟩ *Design and Analysis of Biological Assays*				◆			◆	◆	◆
⟨121⟩ *Insulin Assays*		◆		◆					
⟨121.1⟩ *Physicochemical Analytical Procedures for Insulins*		◆			◆		◆	◆	◆
⟨126⟩ *Somatropin Bioidentity Tests*		◆							

afroozpharma@yahoo.com

Chart 2. Biologics Drug Substances *(Continued)*

Chapter	Description	Identification	Safety	Assay	Physicochemical	Equipment	Impurities: Process Related	Impurities: Product Related	Characterization
⟨129⟩ *Analytical Procedures for Recombinant Therapeutic Monoclonal Antibodies*					♦			♦	♦
⟨191⟩ *Identification Tests—General*		♦							
⟨197⟩ *Spectrophotometric Identification Tests*		♦							
⟨208⟩ *Anti-factor Xa and Anti-factor IIA Assays for Unfractionated and Low Molecular Weight Heparins*				♦					
⟨209⟩ *Low Molecular Weight Heparin Molecular Weight Determinations*		♦							
⟨212⟩ *Oligosaccharide Analysis*					♦			♦	♦
⟨231⟩ *Heavy Metals*							♦		
⟨232⟩ *Elemental Impurities—Limits*							♦		
⟨233⟩ *Elemental Impurities—Procedures*							♦		
⟨467⟩ *Residual Solvents*							♦		
⟨503⟩ *Acetic Acid in Peptides*							♦		
⟨503.1⟩ *Trifluoroacetic Acid (TFA) in Peptides*							♦		
⟨507⟩ *Protein Determination Procedures*					♦				♦
⟨541⟩ *Titrimetry*				♦			♦		
⟨621⟩ *Chromatography*		♦		♦	♦		♦	♦	♦
⟨631⟩ *Color and Achromicity*	♦								
⟨695⟩ *Crystallinity*	♦								
⟨730⟩ *Plasma Spectrochemistry*							♦		
⟨731⟩ *Loss on Drying*							♦		
⟨736⟩ *Mass Spectrometry*		♦		♦	♦		♦	♦	♦
⟨761⟩ *Nuclear Magnetic Resonance Spectroscopy*		♦		♦	♦		♦	♦	♦
⟨781⟩ *Optical Rotation*				♦					
⟨782⟩ *Vibrational Circular Dichroism Spectroscopy*				♦					
⟨786⟩ *Particle Size Distribution Estimation by Analytical Sieving*					♦				
⟨831⟩ *Refractive Index*					♦				
⟨852⟩ *Atomic Absorption Spectroscopy*		♦		♦	♦		♦		♦
⟨853⟩ *Fluorescence Spectroscopy*		♦		♦	♦		♦		♦
⟨854⟩ *Mid-Infrared Spectroscopy*		♦		♦	♦		♦		♦
⟨855⟩ *Nephelometry, Turbidimetry, and Visual Comparison*				♦	♦		♦		♦
⟨857⟩ *Ultraviolet-Visible Spectroscopy*		♦		♦	♦		♦		♦
⟨921⟩ *Water Determination*							♦		
⟨1025⟩ *Pancreatin*	♦	♦	♦	♦	♦		♦	♦	♦
⟨1030⟩ *Biological Assay Chapters—Overview and Glossary*		♦		♦					♦
⟨1032⟩ *Design and Development of Biological Assays*		♦		♦					♦
⟨1033⟩ *Biological Assay Validation*		♦		♦					♦
⟨1034⟩ *Analysis of Biological Assays*		♦		♦					♦
⟨1041⟩ *Biologics*	♦								
⟨1044⟩ *Cryopreservation of Cells*				♦					♦

afroozpharma@yahoo.com

Chart 2. Biologics Drug Substances *(Continued)*

Chapter	Description	Identification	Safety	Assay	Physicochemical	Equipment	Impurities: Process Related	Impurities: Product Related	Characterization
⟨1048⟩ *Quality of Biotechnological Products: Analysis of the Expression Construct in Cells Used for Production of r-DNA Derived Protein Products*									•
⟨1050.1⟩ *Design, Evaluation, and Characterization of Viral Clearance Procedures*			•						
⟨1052⟩ *Biotechnology-Derived Articles—Amino Acid Analysis*		•		•	•		•		•
⟨1053⟩ *Capillary Electrophoresis*		•		•	•		•		•
⟨1054⟩ *Biotechnology-Derived Articles—Isoelectric Focusing*		•		•	•		•		•
⟨1055⟩ *Biotechnology-Derived Articles—Peptide Mapping*		•		•	•		•		•
⟨1056⟩ *Biotechnology-Derived Articles—Polyacrylamide Gel Electrophoresis*		•		•	•		•		•
⟨1057⟩ *Biotechnology-Derived Articles—Total Protein Assay*		•		•	•		•		•
⟨1065⟩ *Ion Chromatography*					•				
⟨1084⟩ *Glycoprotein and Glycan Analysis—General Considerations*							•		•
⟨1102⟩ *Immunological Test Methods—General Considerations*		•		•			•	•	•
⟨1103⟩ *Immunological Test Methods—Enzyme-Linked Immunosorbent Assay (ELISA)*		•		•			•	•	•
⟨1104⟩ *Immunological Test Methods—Immunoblot Analysis*		•					•	•	•
⟨1105⟩ *Immunological Test Methods—Surface Plasmon Resonance*				•					•
⟨1113⟩ *Microbial Characterization, Identification, and Strain Typing*			•						
⟨1121⟩ *Nomenclature*	•								
⟨1125⟩ *Nucleic Acid-Based Techniques—General*		•							•
⟨1126⟩ *Nucleic Acid-Based Techniques—Extraction, Detection, and Sequencing*		•							•
⟨1127⟩ *Nucleic Acid-Based Techniques—Amplification*		•							•
⟨1128⟩ *Nucleic Acid-Based Techniques—Microarray*									•
⟨1129⟩ *Nucleic Acid-Based Techniques—Genotyping*									•
⟨1130⟩ *Nucleic Acid-Based Techniques—Approaches for Detecting Trace Nucleic Acids (Residual DNA Testing)*			•				•		•
⟨1132⟩ *Residual Host Cell Protein Measurement in Biopharmaceuticals*			•				•		
⟨1180⟩ *Human Plasma*			•						
⟨1181⟩ *Scanning Electron Microscopy*									•
⟨1211⟩ *Sterilization and Sterility Assurance of Compendial Articles*			•						
⟨1228⟩ *Depyrogenation*			•						
⟨1228.1⟩ *Dry Heat Depyrogenation*			•						
⟨1228.3⟩ *Depyrogenation by Filtration*			•						

afroozpharma@yahoo.com

Chart 2. Biologics Drug Substances *(Continued)*

Chapter	Description	Identification	Safety	Assay	Physicochemical	Equipment	Impurities: Process Related	Impurities: Product Related	Characterization
⟨1228.5⟩ *Endotoxin Indicators for Depyrogenation*			♦						
⟨1229⟩ *Sterilization of Compendial Articles*			♦						
⟨1229.4⟩ *Sterilizing Filtration of Liquids*			♦						
⟨1251⟩ *Weighing on an Analytical Balance*						♦			
⟨1736⟩ *Applications of Mass Spectrometry*		♦	♦						
⟨1761⟩ *Applications of Nuclear Magnetic Resonance Spectroscopy*		♦		♦	♦		♦	♦	♦
⟨1782⟩ *Vibrational Circular Dichroism Spectroscopy—Theory and Practice*				♦					
⟨1852⟩ *Atomic Absorption Spectroscopy—Theory and Practice*		♦		♦	♦		♦		♦
⟨1853⟩ *Fluorescence Spectroscopy—Theory and Practice*		♦		♦	♦		♦		♦
⟨1854⟩ *Mid-Infrared Spectroscopy—Theory and Practice*		♦		♦	♦		♦		♦
⟨1857⟩ *Ultraviolet-Visible Spectroscopy—Theory and Practice*		♦		♦	♦		♦		♦

Chart 3a. Excipients—Universal Tests

Chapter	Description	Identification	Assay	Impurities: Organic	Impurities: Inorganic	Impurities: Residual Solvents
⟨7⟩ *Labeling*	♦					
⟨181⟩ *Identification—Organic Nitrogenous Bases*		♦				
⟨191⟩ *Identification Tests—General*		♦				
⟨197⟩ *Spectrophotometric Identification Tests*		♦				
⟨201⟩ *Thin-Layer Chromatographic Identification Test*		♦				
⟨202⟩ *Identification of Fixed Oils by Thin-Layer Chromatography*		♦				
⟨203⟩ *High-Performance Thin-Layer Chromatography Procedure for Identification of Articles of Botanical Origin*		♦				
⟨206⟩ *Aluminum*					♦	
⟨211⟩ *Arsenic*					♦	
⟨221⟩ *Chloride and Sulfate*					♦	
⟨226⟩ *4-Epianhydrotetracycline*				♦		
⟨228⟩ *Ethylene Oxide and Dioxane*						♦
⟨231⟩ *Heavy Metals*					♦	
⟨232⟩ *Elemental Impurities—Limits*					♦	
⟨233⟩ *Elemental Impurities—Procedures*					♦	
⟨241⟩ *Iron*					♦	
⟨251⟩ *Lead*					♦	

afroozpharma@yahoo.com

Chart 3a. Excipients—Universal Tests *(Continued)*

Chapter	Description	Identification	Assay	Impurities: Organic	Impurities: Inorganic	Impurities: Residual Solvents
⟨261⟩ *Mercury*					♦	
⟨281⟩ *Residue on Ignition*					♦	
⟨291⟩ *Selenium*					♦	
⟨311⟩ *Alginates Assay*			♦			
⟨345⟩ *Assay for Citric Acid/ Citrate and Phosphate*			♦			
⟨401⟩ *Fats and Fixed Oils*		♦				
⟨425⟩ *Iodometric Assay—Antibiotics*			♦			
⟨431⟩ *Methoxy Determination*			♦			
⟨461⟩ *Nitrogen Determination*				♦		
⟨466⟩ *Ordinary Impurities*				♦		
⟨467⟩ *Residual Solvents*						♦
⟨469⟩ *Ethylene Glycol, Diethylene Glycol, and Triethylene Glycol in Ethoxylated Substances*				♦		
⟨471⟩ *Oxygen Flask Combustion*					♦	
⟨541⟩ *Titrimetry*			♦			
⟨621⟩ *Chromatography*		♦	♦	♦		♦
⟨730⟩ *Plasma Spectrochemistry*					♦	
⟨731⟩ *Loss on Drying*		♦				♦
⟨733⟩ *Loss on Ignition*					♦	
⟨735⟩ *X-Ray Fluorescence Spectrometry*		♦			♦	
⟨736⟩ *Mass Spectrometry*		♦				
⟨781⟩ *Optical Rotation*		♦		♦		
⟨801⟩ *Polarography*			♦	♦		
⟨852⟩ *Atomic Absorption Spectroscopy*		♦	♦	♦		
⟨853⟩ *Fluorescence Spectroscopy*		♦	♦	♦		
⟨854⟩ *Mid-Infrared Spectroscopy*		♦	♦	♦		
⟨855⟩ *Nephelometry, Turbidimetry, and Visual Comparison*			♦	♦		
⟨857⟩ *Ultraviolet-Visible Spectroscopy*		♦	♦	♦		
⟨941⟩ *Characterization of Crystalline and Partially Crystalline Solids by X-Ray Powder Diffraction (XRPD)*		♦				
⟨1064⟩ *Identification of Articles of Botanical Origin by High-Performance Thin-Layer Chromatography Procedure*		♦				
⟨1086⟩ *Impurities in Drug Substances and Drug Products*				♦		

afroozpharma@yahoo.com

Chart 3a. Excipients—Universal Tests *(Continued)*

Chapter	Description	Identification	Assay	Impurities		
				Organic	Inorganic	Residual Solvents
⟨1091⟩ *Labeling of Inactive Ingredients*	♦					
⟨1119⟩ *Near-Infrared Spectroscopy*		♦				
⟨1730⟩ *Plasma Spectrochemistry—Theory and Practice*		♦	♦			
⟨1735⟩ *X-Ray Fluorescence Spectrometry—Theory and Practice*		♦	♦			
⟨1736⟩ *Applications of Mass Spectrometry*		♦				
⟨1852⟩ *Atomic Absorption Spectroscopy—Theory and Practice*		♦	♦	♦		
⟨1853⟩ *Fluorescence Spectroscopy—Theory and Practice*		♦	♦	♦		
⟨1854⟩ *Mid-Infrared Spectroscopy—Theory and Practice*		♦	♦	♦		
⟨1857⟩ *Ultraviolet-Visible Spectroscopy—Theory and Practice*		♦	♦	♦		

Chart 3b. Excipients—Specific Tests

Chapter	Physicochemical Characterization	Equipment	Pharmaceutical Water[1]	Functionality/Safety/ GMPs
⟨31⟩ *Volumetric Apparatus*		♦		
⟨41⟩ *Balances*		♦		
⟨268⟩ *Porosity by Nitrogen Adsorption–Desorption*	♦			
⟨301⟩ *Acid-Neutralizing Capacity*				♦
⟨429⟩ *Light Diffraction Measurement of Particle Size*	♦			
⟨541⟩ *Titrimetry*			♦	
⟨616⟩ *Bulk Density and Tapped Density*	♦			
⟨631⟩ *Color and Achromicity*	♦			
⟨641⟩ *Completeness of Solution*	♦			
⟨643⟩ *Total Organic Carbon*			♦	
⟨645⟩ *Water Conductivity*			♦	
⟨651⟩ *Congealing Temperature*	♦			
⟨695⟩ *Crystallinity*	♦			
⟨699⟩ *Density of Solids*	♦			
⟨721⟩ *Distilling Range*	♦			
⟨731⟩ *Loss on Drying*	♦			
⟨735⟩ *X-Ray Fluorescence Spectrometry*	♦			
⟨741⟩ *Melting Range or Temperature*	♦			
⟨761⟩ *Nuclear Magnetic Resonance Spectroscopy*	♦			
⟨776⟩ *Optical Microscopy*	♦			
⟨781⟩ *Optical Rotation*	♦			

[1] See *Microbiology (Chart 10)*.

afroozpharma@yahoo.com

Chart 3b. Excipients—Specific Tests *(Continued)*

Chapter	Physicochemical Characterization	Equipment	Pharmaceutical Water[1]	Functionality/Safety/ GMPs
⟨782⟩ *Vibrational Circular Dichroism Spectroscopy*	◆			
⟨785⟩ *Osmolality and Osmolarity*	◆			
⟨786⟩ *Particle Size Distribution Estimation by Analytical Sieving*	◆			
⟨791⟩ *pH*	◆		◆	
⟨811⟩ *Powder Fineness*	◆			
⟨831⟩ *Refractive Index*	◆			
⟨841⟩ *Specific Gravity*	◆			
⟨846⟩ *Specific Surface Area*	◆			
⟨881⟩ *Tensile Strength*	◆			
⟨891⟩ *Thermal Analysis*			◆	
⟨911⟩ *Viscosity—Capillary Methods*	◆			
⟨912⟩ *Viscosity—Rotational Methods*	◆			
⟨913⟩ *Viscosity—Rolling Ball Method*	◆			
⟨921⟩ *Water Determination*			◆	
⟨941⟩ *Characterization of Crystalline and Partially Crystalline Solids by X-Ray Powder Diffraction (XRPD)*	◆			
⟨1051⟩ *Cleaning Glass Apparatus*		◆		
⟨1059⟩ *Excipient Performance*				◆
⟨1074⟩ *Excipient Biological Safety Evaluation Guidelines*				◆
⟨1078⟩ *Good Manufacturing Practices for Bulk Pharmaceutical Excipients*				◆
⟨1080⟩ *Bulk Pharmaceutical Excipients—Certificate of Analysis*				◆
⟨1097⟩ *Bulk Powder Sampling Procedures*				◆
⟨1119⟩ *Near-Infrared Spectroscopy*	◆			
⟨1174⟩ *Powder Flow*	◆			◆
⟨1195⟩ *Significant Change Guide for Bulk Pharmaceutical Excipients*				◆
⟨1197⟩ *Good Distribution Practices for Bulk Pharmaceutical Excipients*				◆
⟨1230⟩ *Water for Hemodialysis Applications*			◆	
⟨1231⟩ *Water for Pharmaceutical Purposes*			◆	
⟨1251⟩ *Weighing on an Analytical Balance*		◆		
⟨1644⟩ *Theory and Practice of Electrical Conductivity Measurements of Solutions*			◆	

[1] See *Microbiology (Chart 10)*.

afroozpharma@yahoo.com

Chart 3b. Excipients—Specific Tests *(Continued)*

Chapter	Physicochemical Characterization	Equipment	Pharmaceutical Water[1]	Functionality/Safety/ GMPs
⟨1730⟩ *Plasma Spectrochemistry—Theory and Practice*	•			
⟨1735⟩ *X-Ray Fluorescence Spectrometry—Theory and Practice*	•			
⟨1761⟩ *Applications of Nuclear Magnetic Resonance Spectroscopy*	•			
⟨1782⟩ *Vibrational Circular Dichroism Spectroscopy—Theory and Practice*	•			
⟨1911⟩ *Rheometry*	•			

[1] See *Microbiology (Chart 10)*.

Chart 4a. Chemical Medicines Drug Products—Universal Tests

Chapter	Description	Identification	Assay	Impurities		
				Organic	Inorganic	Residual Solvents
⟨1⟩ *Injections and Implanted Drug Products (Parenterals)—Product Quality Tests*	•	•	•	•	•	•
⟨2⟩ *Oral Drug Products—Product Quality Tests*	•	•	•	•	•	•
⟨3⟩ *Topical and Transdermal Drug Products—Product Quality Tests*	•	•	•	•	•	•
⟨4⟩ *Mucosal Drug Products—Product Quality Tests*	•	•	•	•	•	•
⟨5⟩ *Inhalation and Nasal Drug Products—General Information and Product Quality Checks*	•	•	•	•	•	•
⟨7⟩ *Labeling*	•					
⟨81⟩ *Antibiotics—Microbial Assays*			•			
⟨191⟩ *Identification Tests—General*		•				
⟨197⟩ *Spectrophotometric Identification Tests*		•				
⟨201⟩ *Thin-Layer Chromatographic Identification Test*		•				
⟨202⟩ *Identification of Fixed Oils by Thin-Layer Chromatography*		•				
⟨203⟩ *High-Performance Thin-Layer Chromatography Procedure for Identification of Articles of Botanical Origin*		•				
⟨227⟩ *4-Aminophenol in Acetaminophen-Containing Drug Products*				•		
⟨232⟩ *Elemental Impurities—Limits*					•	
⟨233⟩ *Elemental Impurities—Procedures*					•	
⟨281⟩ *Residue on Ignition*					•	
⟨341⟩ *Antimicrobial Agents—Content*			•			
⟨351⟩ *Assay for Steroids*			•			
⟨391⟩ *Epinephrine Assay*			•			

General Chapters

afroozpharma@yahoo.com

Chart 4a. Chemical Medicines Drug Products—Universal Tests *(Continued)*

Chapter	Description	Identification	Assay	Impurities		
				Organic	Inorganic	Residual Solvents
⟨413⟩ *Impurities Testing in Medical Gases*				♦		
⟨415⟩ *Medical Gases Assay*			♦			
⟨451⟩ *Nitrate Titration*			♦			
⟨461⟩ *Nitrogen Determination*				♦		
⟨466⟩ *Ordinary Impurities*				♦		
⟨467⟩ *Residual Solvents*						♦
⟨501⟩ *Salts of Organic Nitrogenous Bases*		♦	♦			
⟨541⟩ *Titrimetry*			♦			
⟨611⟩ *Alcohol Determination*			♦			
⟨621⟩ *Chromatography*		♦	♦	♦		♦
⟨730⟩ *Plasma Spectrochemistry*					♦	
⟨733⟩ *Loss on Ignition*					♦	
⟨735⟩ *X-Ray Fluorescence Spectrometry*		♦			♦	
⟨736⟩ *Mass Spectrometry*		♦				
⟨781⟩ *Optical Rotation*				♦		
⟨801⟩ *Polarography*			♦	♦		
⟨821⟩ *Radioactivity*		♦	♦	♦	♦	♦
⟨823⟩ *Positron Emission Tomography Drugs for Compounding, Investigational, and Research Uses*		♦	♦	♦	♦	♦
⟨852⟩ *Atomic Absorption Spectroscopy*		♦	♦	♦		
⟨853⟩ *Fluorescence Spectroscopy*		♦	♦	♦		
⟨854⟩ *Mid-Infrared Spectroscopy*		♦	♦	♦		
⟨855⟩ *Nephelometry, Turbidimetry, and Visual Comparison*			♦	♦		
⟨857⟩ *Ultraviolet-Visible Spectroscopy*		♦	♦	♦		
⟨1064⟩ *Identification of Articles of Botanical Origin by High-Performance Thin-Layer Chromatography Procedure*		♦				
⟨1065⟩ *Ion Chromatography*			♦			
⟨1086⟩ *Impurities in Drug Substances and Drug Products*				♦		
⟨1121⟩ *Nomenclature*	♦					
⟨1223.1⟩ *Validation of Alternative Methods to Antibiotic Microbial Assays*			♦			
⟨1730⟩ *Plasma Spectrochemistry—Theory and Practice*		♦	♦			
⟨1735⟩ *X-Ray Fluorescence Spectrometry—Theory and Practice*		♦	♦			
⟨1736⟩ *Applications of Mass Spectrometry*		♦				
⟨1821⟩ *Radioactivity—Theory and Practice*	♦					
⟨1823⟩ *Positron Emission Tomography Drugs—Information*	♦					
⟨1852⟩ *Atomic Absorption Spectroscopy—Theory and Practice*		♦	♦	♦		

General Chapters

afroozpharma@yahoo.com

Chart 4a. Chemical Medicines Drug Products—Universal Tests *(Continued)*

Chapter	Description	Identification	Assay	Impurities		
				Organic	Inorganic	Residual Solvents
⟨1853⟩ *Fluorescence Spectroscopy—Theory and Practice*		♦	♦	♦		
⟨1854⟩ *Mid-Infrared Spectroscopy—Theory and Practice*		♦	♦	♦		
⟨1857⟩ *Ultraviolet-Visible Spectroscopy—Theory and Practice*		♦	♦	♦		

Chart 4b. Chemical Medicines Drug Products—Specific Tests

Chapter	Equipment	Water Content	Performance Tests						
			Mucosal		Parenteral	Oral	Topical	Inhalational	Mucosal (7 membrane surfaces)
			Ophthalmic[1]	Nasal					
⟨31⟩ *Volumetric Apparatus*	♦								
⟨41⟩ *Balances*	♦								
⟨71⟩ *Sterility Tests*					♦				
⟨85⟩ *Bacterial Endotoxins Test*					♦				
⟨87⟩ *Biological Reactivity Tests, In Vitro*					♦				
⟨88⟩ *Biological Reactivity Tests, In Vivo*					♦				
⟨151⟩ *Pyrogen Test*					♦				
⟨301⟩ *Acid-Neutralizing Capacity*						♦			
⟨381⟩ *Elastomeric Closures for Injections*					♦				
⟨541⟩ *Titrimetry*		♦							
⟨601⟩ *Inhalation and Nasal Drug Products: Aerosols, Sprays, and Powders—Performance Quality Tests*				♦				♦	
⟨602⟩ *Propellants*								♦	
⟨603⟩ *Topical Aerosols*							♦		
⟨604⟩ *Leak Rate*				♦			♦	♦	
⟨697⟩ *Container Content for Injections*					♦				
⟨701⟩ *Disintegration*						♦			
⟨705⟩ *Quality Attributes of Tablets Labeled as Having a Functional Score*						♦			
⟨711⟩ *Dissolution*						♦			
⟨724⟩ *Drug Release*						♦	♦		
⟨729⟩ *Globule Size Distribution in Lipid Injectable Emulsions*					♦				
⟨731⟩ *Loss on Drying*		♦							
⟨771⟩ *Ophthalmic Products—Quality Tests*			♦						
⟨785⟩ *Osmolality and Osmolarity*			♦						
⟨787⟩ *Subvisible Particulate Matter in Therapeutic Protein Injections*					♦				
⟨788⟩ *Particulate Matter in Injections*					♦				

[1] See *Microbiology (Chart 10)*.

afroozpharma@yahoo.com

Chart 4b. Chemical Medicines Drug Products—Specific Tests *(Continued)*

			Performance Tests						
			Mucosal						Mucosal (7 membrane surfaces)
Chapter	**Equipment**	**Water Content**	**Ophthalmic**[1]	**Nasal**	**Parenteral**	**Oral**	**Topical**	**Inhalational**	
⟨789⟩ *Particulate Matter in Ophthalmic Solutions*			♦						
⟨790⟩ *Visible Particulates in Injections*					♦				
⟨791⟩ *pH*			♦	♦	♦		♦	♦	
⟨891⟩ *Thermal Analysis*		♦							
⟨905⟩ *Uniformity of Dosage Units*			♦	♦	♦	♦	♦		♦
⟨921⟩ *Water Determination*		♦							
⟨1004⟩ *Mucosal Drug Products—Performance Tests*									♦
⟨1005⟩ *Acoustic Emission*						♦			
⟨1051⟩ *Cleaning Glass Apparatus*	♦								
⟨1087⟩ *Apparent Intrinsic Dissolution—Dissolution Testing Procedures for Rotating Disk and Stationary Disk*						♦			
⟨1088⟩ *In Vitro and In Vivo Evaluation of Dosage Forms*						♦			
⟨1090⟩ *Assessment of Drug Product Performance—Bioavailability, Bioequivalence, and Dissolution*						♦			
⟨1092⟩ *The Dissolution Procedure: Development and Validation*						♦			
⟨1094⟩ *Capsules—Dissolution Testing and Related Quality Attributes*						♦			
⟨1113⟩ *Microbial Characterization, Identification, and Strain Typing*					♦				
⟨1216⟩ *Tablet Friability*						♦			
⟨1217⟩ *Tablet Breaking Force*						♦			
⟨1228⟩ *Depyrogenation*					♦				
⟨1228.1⟩ *Dry Heat Depyrogenation*					♦				
⟨1228.3⟩ *Depyrogenation by Filtration*					♦				
⟨1228.5⟩ *Endotoxin Indicators for Depyrogenation*					♦				
⟨1229⟩ *Sterilization of Compendial Articles*					♦				
⟨1229.2⟩ *Moist Heat Sterilization of Aqueous Liquids*					♦				
⟨1229.3⟩ *Monitoring of Bioburden*					♦				
⟨1229.4⟩ *Sterilizing Filtration of Liquids*					♦				
⟨1229.13⟩ *Sterilization-in-Place*	♦								

[1] See *Microbiology (Chart 10)*.

afroozpharma@yahoo.com

Chart 4b. Chemical Medicines Drug Products—Specific Tests *(Continued)*

			Performance Tests						
			Mucosal						
Chapter	**Equipment**	**Water Content**	**Ophthalmic**[1]	**Nasal**	**Parenteral**	**Oral**	**Topical**	**Inhalational**	**Mucosal (7 membrane surfaces)**
⟨1251⟩ *Weighing on an Analytical Balance*	♦								
⟨1601⟩ *Products for Nebulization—Characterization Tests*								♦	
⟨1602⟩ *Spacers and Valved Holding Chambers Used With Inhalation Aerosols—Characterization Tests*								♦	
⟨1724⟩ *Semisolid Drug Products—Performance Tests*							♦		
⟨1771⟩ *Ophthalmic Products—Performance Tests*			♦						
⟨1788⟩ *Methods for the Determination of Particulate Matter in Injections and Ophthalmic Solutions*					♦				
⟨1787⟩ *Measurement of Subvisible Particulate Matter in Therapeutic Protein Injections*					♦				

[1] See *Microbiology (Chart 10)*.

Chart 5. Biologics Drug Products

									Impurities	
Chapter	**Identification**	**Characterization**	**Equipment**	**Misc. Tests**	**Description**	**Safety**	**Assay**	**Physicochemical**	**Process Related**	**Product Related**
⟨1⟩ *Injections and Implanted Drug Products (Parenterals)—Product Quality Tests*				♦						
⟨7⟩ *Labeling*				♦						
⟨11⟩ *USP Reference Standards*	♦					♦	♦	♦	♦	♦
⟨31⟩ *Volumetric Apparatus*			♦							
⟨41⟩ *Balances*			♦							
⟨61⟩ *Microbiological Examination of Nonsterile Products: Microbial Enumeration Tests*						♦			♦	
⟨62⟩ *Microbiological Examination of Nonsterile Products: Tests for Specified Microorganisms*						♦			♦	
⟨63⟩ *Mycoplasma Tests*						♦			♦	
⟨71⟩ *Sterility Tests*						♦				
⟨85⟩ *Bacterial Endotoxins Test*						♦				
⟨87⟩ *Biological Reactivity Tests, In Vitro*						♦				
⟨88⟩ *Biological Reactivity Tests, In Vivo*						♦				

General Chapters

afroozpharma@yahoo.com

Chart 5. Biologics Drug Products *(Continued)*

Chapter	Identification	Characterization	Equipment	Misc. Tests	Description	Safety	Assay	Physicochemical	Impurities	
									Process Related	Product Related
⟨89⟩ *Enzymes Used as Ancillary Materials in Pharmaceutical Manufacturing*	♦	♦			♦	♦	♦		♦	
⟨89.1⟩ *Collagenase I*	♦	♦			♦	♦	♦		♦	
⟨89.2⟩ *Collagenase II*	♦	♦			♦	♦	♦		♦	
⟨90⟩ *Fetal Bovine Serum—Quality Attributes and Functionality Tests*									♦	
⟨111⟩ *Design and Analysis of Biological Assays*		♦					♦		♦	♦
⟨121⟩ *Insulin Assays*	♦						♦			
⟨121.1⟩ *Physicochemical Analytical Procedures for Insulins*	♦	♦						♦	♦	♦
⟨123⟩ *Glucagon Bioidentity Tests*	♦									
⟨124⟩ *Erythropoietin Bioassays*		♦					♦			
⟨126⟩ *Somatropin Bioidentity Tests*	♦									
⟨129⟩ *Analytical Procedures for Recombinant Therapeutic Monoclonal Antibodies*		♦						♦		♦
⟨130⟩ *Protein A Quality Attributes*									♦	
⟨151⟩ *Pyrogen Test*						♦				
⟨191⟩ *Identification Tests—General*	♦									
⟨197⟩ *Spectrophotometric Identification Tests*	♦									
⟨208⟩ *Anti-factor Xa and Anti-factor IIa Assays for Unfractionated and Low Molecular Weight Heparins*		♦					♦			
⟨209⟩ *Low Molecular Weight Heparin Molecular Weight Determinations*		♦								
⟨212⟩ *Oligosaccharide Analysis*		♦						♦		♦
⟨231⟩ *Heavy Metals*									♦	
⟨232⟩ *Elemental Impurities—Limits*									♦	
⟨233⟩ *Elemental Impurities—Procedures*									♦	
⟨341⟩ *Antimicrobial Agents—Content*						♦				
⟨467⟩ *Residual Solvents*									♦	
⟨503⟩ *Acetic Acid in Peptides*									♦	
⟨507⟩ *Protein Determination Procedures*		♦						♦		
⟨541⟩ *Titrimetry*							♦		♦	

General Chapters

afroozpharma@yahoo.com

Chart 5. Biologics Drug Products *(Continued)*

Chapter	Identification	Characterization	Equipment	Misc. Tests	Description	Safety	Assay	Physicochemical	Impurities: Process Related	Impurities: Product Related
⟨621⟩ *Chromatography*	♦	♦					♦	♦	♦	♦
⟨631⟩ *Color and Achromicity*					♦					
⟨660⟩ *Containers—Glass*				♦						
⟨661⟩ *Plastic Packaging Systems and Their Materials of Construction*				♦						
⟨661.1⟩ *Plastic Materials of Construction*				♦						
⟨661.2⟩ *Plastic Packaging Systems for Pharmaceutical Use*				♦						
⟨671⟩ *Containers—Performance Testing*				♦						
⟨695⟩ *Crystallinity*					♦					
⟨697⟩ *Container Content for Injections*				♦						
⟨730⟩ *Plasma Spectrochemistry*									♦	
⟨731⟩ *Loss on Drying*									♦	
⟨736⟩ *Mass Spectrometry*	♦	♦					♦	♦	♦	♦
⟨761⟩ *Nuclear Magnetic Resonance Spectroscopy*	♦	♦					♦	♦	♦	♦
⟨781⟩ *Optical Rotation*							♦			
⟨782⟩ *Vibrational Circular Dichroism Spectroscopy*							♦			
⟨785⟩ *Osmolality and Osmolarity*								♦		
⟨786⟩ *Particle Size Distribution Estimation by Analytical Sieving*								♦		
⟨787⟩ *Subvisible Particulate Matter in Therapeutic Protein Injections*				♦						
⟨788⟩ *Particulate Matter in Injections*				♦						
⟨791⟩ *pH*					♦			♦		
⟨821⟩ *Radioactivity*	♦	♦	♦			♦	♦		♦	♦
⟨831⟩ *Refractive Index*								♦		
⟨852⟩ *Atomic Absorption Spectroscopy*	♦	♦					♦	♦	♦	
⟨853⟩ *Fluorescence Spectroscopy*	♦	♦					♦	♦	♦	
⟨854⟩ *Mid-Infrared Spectroscopy*	♦	♦					♦	♦	♦	
⟨855⟩ *Nephelometry, Turbidimetry, and Visual Comparison*		♦					♦	♦	♦	
⟨857⟩ *Ultraviolet-Visible Spectroscopy*	♦	♦					♦	♦	♦	
⟨921⟩ *Water Determination*									♦	
⟨1024⟩ *Bovine Serum*									♦	
⟨1025⟩ *Pancreatin*	♦	♦			♦	♦	♦	♦	♦	♦

afroozpharma@yahoo.com

Chart 5. Biologics Drug Products *(Continued)*

Chapter	Identification	Characterization	Equipment	Misc. Tests	Description	Safety	Assay	Physicochemical	Impurities: Process Related	Impurities: Product Related
⟨1030⟩ *Biological Assay Chapters—Overview and Glossary*	♦	♦					♦			
⟨1032⟩ *Design and Development of Biological Assays*	♦	♦					♦			
⟨1033⟩ *Biological Assay Validation*	♦	♦					♦			
⟨1034⟩ *Analysis of Biological Assays*	♦	♦					♦			
⟨1041⟩ *Biologics*					♦					
⟨1044⟩ *Cryopreservation of Cells*		♦					♦			
⟨1050⟩ *Viral Safety Evaluation of Biotechnology Products Derived from Cell Lines of Human or Animal Origin*						♦				
⟨1050.1⟩ *Design, Evaluation, and Characterization of Viral Clearance Procedures*						♦				
⟨1052⟩ *Biotechnology Derived Articles—Amino Acid Analysis*	♦	♦					♦	♦	♦	
⟨1053⟩ *Capillary Electrophoresis*	♦	♦					♦	♦	♦	
⟨1054⟩ *Biotechnology Derived Articles—Isoelectric Focusing*	♦	♦					♦	♦	♦	
⟨1055⟩ *Biotechnology Derived Articles—Peptide Mapping*	♦	♦					♦	♦	♦	
⟨1056⟩ *Biotechnology Derived Articles—Polyacrylamide Gel Electrophoresis*	♦	♦					♦	♦	♦	
⟨1057⟩ *Biotechnology Derived Articles—Total Protein Assay*	♦	♦					♦	♦	♦	
⟨1065⟩ *Ion Chromatography*										♦
⟨1084⟩ *Glycoprotein and Glycan Analysis—General Considerations*		♦						♦	♦	
⟨1102⟩ *Immunological Test Methods—General Considerations*	♦	♦					♦		♦	♦
⟨1103⟩ *Immunological Test Methods—Enzyme-Linked Immunosorbent Assay (ELISA)*	♦	♦					♦		♦	♦
⟨1104⟩ *Immunological Test Methods—Immunoblot Analysis*	♦	♦							♦	♦
⟨1105⟩ *Immunological Test Methods—Surface Plasmon Resonance*		♦					♦			

afroozpharma@yahoo.com

Chart 5. Biologics Drug Products *(Continued)*

Chapter	Identification	Characterization	Equipment	Misc. Tests	Description	Safety	Assay	Physicochemical	Impurities: Process Related	Impurities: Product Related
⟨1106⟩ *Immunogenicity Assays—Design and Validation of Immunoassays to Detect Anti-Drug Antibodies*						♦				
⟨1106.1⟩ *Immunogenicity Assays—Design and Validation of Assays to Detect Anti-Drug Neutralizing Antibody*						♦				
⟨1111⟩ *Microbiological Examination of Nonsterile Products: Acceptance Criteria for Pharmaceutical Preparations and Substances for Pharmaceutical Use*						♦				
⟨1113⟩ *Microbial Characterization, Identification, and Strain Typing*						♦			♦	
⟨1121⟩ *Nomenclature*					♦					
⟨1125⟩ *Nucleic Acid-Based Techniques—General*							♦		♦	
⟨1126⟩ *Nucleic Acid-Based Techniques—Extraction, Detection, and Sequencing*							♦		♦	
⟨1127⟩ *Nucleic Acid-Based Techniques—Amplification*							♦		♦	
⟨1128⟩ *Nucleic Acid-Based Techniques—Microarray*									♦	
⟨1129⟩ *Nucleic Acid-Based Techniques—Genotyping*							♦		♦	
⟨1130⟩ *Nucleic Acid-Based Techniques—Approaches for Detecting Trace Nucleic Acids (Residual DNA Testing)*						♦			♦	
⟨1132⟩ *Residual Host Cell Protein Measurement in Biopharmaceuticals*						♦			♦	
⟨1181⟩ *Scanning Electron Microscopy*		♦								
⟨1211⟩ *Sterilization and Sterility Assurance of Compendial Articles*						♦				
⟨1228⟩ *Depyrogenation*						♦				
⟨1228.1⟩ *Dry Heat Depyrogenation*						♦				
⟨1228.3⟩ *Depyrogenation by Filtration*						♦				
⟨1228.5⟩ *Endotoxin Indicators for Depyrogenation*						♦				
⟨1229⟩ *Sterilization of Compendial Articles*						♦				
⟨1229.4⟩ *Sterilizing Filtration of Liquids*						♦				

General Chapters

afroozpharma@yahoo.com

Chart 5. Biologics Drug Products *(Continued)*

Chapter	Identification	Characterization	Equipment	Misc. Tests	Description	Safety	Assay	Physicochemical	Impurities: Process Related	Impurities: Product Related
⟨1229.13⟩ *Sterilization-in-Place*			•							
⟨1251⟩ *Weighing on an Analytical Balance*			•							
⟨1660⟩ *Evaluation of the Inner Surface Durability of Glass Containers*				•						
⟨1661⟩ *Evaluation of Plastic Packaging Systems and Their Materials of Construction with Respect to Their User Safety Impact*				•						
⟨1663⟩ *Assessment of Extractables Associated with Pharmaceutical Packaging/Delivery Systems*				•						
⟨1664⟩ *Assessment of Drug Product Leachables Associated with Pharmaceutical Packaging/Delivery Systems*				•						
⟨1736⟩ *Applications of Mass Spectrometry*	•	•					•	•	•	•
⟨1761⟩ *Applications of Nuclear Magnetic Resonance Spectroscopy*	•	•					•	•	•	•
⟨1782⟩ *Vibrational Circular Dichroism Spectroscopy—Theory and Practice*							•			
⟨1787⟩ *Measurement of Subvisible Particulate Matter in Therapeutic Protein Injections*				•						
⟨1788⟩ *Methods for the Determination of Particulate Matter in Injections and Ophthalmic Solutions*				•						
⟨1821⟩ *Radioactivity—Theory and Practice*					•					
⟨1852⟩ *Atomic Absorption Spectroscopy—Theory and Practice*	•	•					•	•	•	
⟨1853⟩ *Fluorescence Spectroscopy—Theory and Practice*	•	•					•	•	•	
⟨1854⟩ *Mid-Infrared Spectroscopy—Theory and Practice*	•	•					•	•	•	
⟨1857⟩ *Ultraviolet-Visible Spectroscopy—Theory and Practice*	•	•					•	•	•	

afroozpharma@yahoo.com

Chart 6. Vaccines

Chapter	Identification	Characterization	Equipment	Misc. Tests	Description	Safety	Assay	Physicochemical	Impurities: Process Related	Impurities: Product Related
⟨1⟩ *Injections and Implanted Drug Products (Parenterals)—Product Quality Tests*				♦						
⟨11⟩ *USP Reference Standards*						♦				
⟨31⟩ *Volumetric Apparatus*			♦							
⟨41⟩ *Balances*			♦							
⟨63⟩ *Mycoplasma Tests*						♦				
⟨71⟩ *Sterility Tests*						♦				
⟨81⟩ *Antibiotics—Microbial Assays*									♦	
⟨85⟩ *Bacterial Endotoxins Test*						♦				
⟨88⟩ *Biological Reactivity Tests, In Vivo*						♦				
⟨90⟩ *Fetal Bovine Serum—Quality Attributes and Functionality Tests*						♦			♦	
⟨111⟩ *Design and Analysis of Biological Assays*		♦					♦		♦	♦
⟨151⟩ *Pyrogen Test*						♦				
⟨341⟩ *Antimicrobial Agents—Content*						♦				
⟨507⟩ *Protein Determination Procedures*		♦						♦		
⟨621⟩ *Chromatography*	♦	♦					♦	♦	♦	♦
⟨660⟩ *Containers—Glass*				♦						
⟨661⟩ *Plastic Packaging Systems and Their Materials of Construction*				♦						
⟨661.1⟩ *Plastic Materials of Construction*				♦						
⟨661.2⟩ *Plastic Packaging Systems for Pharmaceutical Use*				♦						
⟨671⟩ *Containers—Performance Testing*				♦						
⟨695⟩ *Crystallinity*										
⟨697⟩ *Container Content for Injections*				♦						
⟨731⟩ *Loss on Drying*									♦	
⟨736⟩ *Mass Spectrometry*	♦	♦					♦	♦	♦	♦
⟨761⟩ *Nuclear Magnetic Resonance Spectroscopy*	♦	♦					♦	♦	♦	♦
⟨786⟩ *Particle Size Distribution Estimation by Analytical Sieving*								♦		
⟨787⟩ *Subvisible Particulate Matter in Therapeutic Protein Injections*				♦						
⟨788⟩ *Particulate Matter in Injections*				♦						
⟨790⟩ *Visible Particulates in Injections*				♦						

afroozpharma@yahoo.com

Chart 6. Vaccines *(Continued)*

Chapter	Identification	Characterization	Equipment	Misc. Tests	Description	Safety	Assay	Physicochemical	Impurities: Process Related	Impurities: Product Related
⟨791⟩ *pH*					♦			♦		
⟨852⟩ *Atomic Absorption Spectroscopy*							♦	♦		
⟨853⟩ *Fluorescence Spectroscopy*							♦	♦		
⟨854⟩ *Mid-Infrared Spectroscopy*							♦	♦		
⟨855⟩ *Nephelometry, Turbidimetry, and Visual Comparison*							♦	♦		
⟨857⟩ *Ultraviolet-Visible Spectroscopy*							♦	♦		
⟨921⟩ *Water Determination*									♦	
⟨1024⟩ *Bovine Serum*						♦			♦	
⟨1030⟩ *Biological Assay Chapters—Overview and Glossary*	♦	♦					♦			
⟨1032⟩ *Design and Development of Biological Assays*	♦	♦					♦			
⟨1033⟩ *Biological Assay Validation*	♦	♦					♦			
⟨1034⟩ *Analysis of Biological Assays*	♦	♦					♦			
⟨1041⟩ *Biologics*					♦					
⟨1044⟩ *Cryopreservation of Cells*		♦					♦			
⟨1052⟩ *Biotechnology Derived Articles—Amino Acid Analysis*	♦	♦					♦	♦	♦	
⟨1053⟩ *Capillary Electrophoresis*	♦	♦					♦	♦	♦	
⟨1054⟩ *Biotechnology Derived Articles—Isoelectric Focusing*	♦	♦					♦	♦	♦	
⟨1055⟩ *Biotechnology Derived Articles—Peptide Mapping*	♦	♦					♦	♦	♦	
⟨1056⟩ *Biotechnology Derived Articles—Polyacrylamide Gel Electrophoresis*	♦	♦					♦	♦	♦	
⟨1057⟩ *Biotechnology Derived Articles—Total Protein Assay*	♦	♦					♦	♦	♦	
⟨1065⟩ *Ion Chromatography*								♦		
⟨1084⟩ *Glycoprotein and Glycan Analysis—General Considerations*		♦						♦	♦	
⟨1102⟩ *Immunological Test Methods—General Considerations*	♦	♦							♦	♦

afroozpharma@yahoo.com

Chart 6. Vaccines *(Continued)*

Chapter	Identification	Characterization	Equipment	Misc. Tests	Description	Safety	Assay	Physicochemical	Impurities: Process Related	Impurities: Product Related
⟨1103⟩ *Immunological Test Methods—Enzyme-Linked Immunosorbent Assay (ELISA)*	♦	♦							♦	♦
⟨1104⟩ *Immunological Test Methods—Immunoblot Analysis*	♦	♦							♦	♦
⟨1105⟩ *Immunological Test Methods—Surface Plasmon Resonance*		♦					♦			
⟨1113⟩ *Microbial Characterization, Identification, and Strain Typing*						♦				
⟨1121⟩ *Nomenclature*						♦				
⟨1126⟩ *Nucleic Acid-Based Techniques—Extraction, Detection, and Sequencing*	♦	♦							♦	
⟨1127⟩ *Nucleic Acid-Based Techniques—Amplification*	♦	♦							♦	
⟨1128⟩ *Nucleic Acid-Based Techniques—Microarray*	♦									
⟨1129⟩ *Nucleic Acid-Based Techniques—Genotyping*	♦									
⟨1130⟩ *Nucleic Acid-Based Techniques—Approaches for Detecting Trace Nucleic Acids (Residual DNA Testing)*									♦	
⟨1211⟩ *Sterilization and Sterility Assurance of Compendial Articles*						♦				
⟨1228⟩ *Depyrogenation*						♦				
⟨1228.1⟩ *Dry Heat Depyrogenation*						♦				
⟨1228.3⟩ *Depyrogenation by Filtration*						♦				
⟨1228.5⟩ *Endotoxin Indicators for Depyrogenation*						♦				
⟨1229⟩ *Sterilization of Compendial Articles*						♦				
⟨1229.4⟩ *Sterilizing Filtration of Liquids*						♦				
⟨1229.13⟩ *Sterilization-in-Place*			♦							
⟨1234⟩ *Vaccines for Human Use—Polysaccharide and Glycoconjugate Vaccines*	♦	♦				♦	♦	♦	♦	♦
⟨1235⟩ *Vaccines for Human Use—General Considerations*	♦	♦					♦			♦
⟨1237⟩ *Virology Test Methods*						♦	♦		♦	♦

afroozpharma@yahoo.com

Chart 6. Vaccines *(Continued)*

Chapter	Identification	Characterization	Equipment	Misc. Tests	Description	Safety	Assay	Physicochemical	Impurities: Process Related	Impurities: Product Related
⟨1238⟩ *Vaccines for Human Use—Bacterial Vaccines*	♦	♦					♦	♦	♦	♦
⟨1251⟩ *Weighing on an Analytical Balance*			♦							
⟨1660⟩ *Evaluation of the Inner Surface Durability of Glass Containers*				♦						
⟨1661⟩ *Evaluation of Plastic Packaging Systems and Their Materials of Construction with Respect to Their User Safety Impact*				♦						
⟨1663⟩ *Assessment of Extractables Associated with Pharmaceutical Packaging/Delivery Systems*				♦						
⟨1664⟩ *Assessment of Drug Product Leachables Associated with Pharmaceutical Packaging/Delivery Systems*				♦						
⟨1736⟩ *Applications of Mass Spectrometry*	♦	♦					♦	♦	♦	♦
⟨1761⟩ *Applications of Nuclear Magnetic Resonance Spectroscopy*	♦	♦					♦		♦	♦
⟨1787⟩ *Measurement of Subvisible Particulate Matter in Therapeutic Protein Injections*				♦						
⟨1788⟩ *Methods for the Determination of Particulate Matter in Injections and Ophthalmic Solutions*				♦						
⟨1852⟩ *Atomic Absorption Spectroscopy—Theory and Practice*							♦	♦		
⟨1853⟩ *Fluorescence Spectroscopy—Theory and Practice*							♦	♦		
⟨1854⟩ *Mid-Infrared Spectroscopy—Theory and Practice*							♦	♦		
⟨1857⟩ *Ultraviolet-Visible Spectroscopy—Theory and Practice*							♦	♦		

afroozpharma@yahoo.com

Chart 7. Blood and Blood Products

Chapter	Identification	Characterization	Equipment	Misc. Tests	Description	Safety	Assay	Physicochemical	Impurities: Process Related	Impurities: Product Related
⟨1⟩ *Injections and Implanted Drug Products (Parenterals)—Product Quality Tests*				•						
⟨11⟩ *USP Reference Standards*	•					•	•	•	•	•
⟨31⟩ *Volumetric Apparatus*			•							
⟨41⟩ *Balances*			•							
⟨51⟩ *Antimicrobial Effectiveness Testing*						•				
⟨61⟩ *Microbiological Examination of Nonsterile Products: Microbial Enumeration Tests*						•				
⟨62⟩ *Microbiological Examination of Nonsterile Products: Tests for Specified Microorganisms*						•				
⟨71⟩ *Sterility Tests*						•				
⟨85⟩ *Bacterial Endotoxins Test*						•				
⟨87⟩ *Biological Reactivity Tests, In Vitro*						•				
⟨88⟩ *Biological Reactivity Tests, In Vivo*						•				
⟨111⟩ *Design and Analysis of Biological Assays*		•					•		•	•
⟨151⟩ *Pyrogen Test*						•				
⟨191⟩ *Identification Tests—General*	•									
⟨197⟩ *Spectrophotometric Identification Tests*	•									
⟨208⟩ *Anti-factor Xa and Anti-factor IIa Assays for Unfractionated and Low Molecular Weight Heparins*							•			
⟨209⟩ *Low Molecular Weight Heparin Molecular Weight Determinations*	•									
⟨341⟩ *Antimicrobial Agents—Content*						•				
⟨507⟩ *Protein Determination Procedures*		•						•		
⟨621⟩ *Chromatography*	•	•					•	•	•	•
⟨631⟩ *Color and Achromicity*					•					
⟨660⟩ *Containers—Glass*				•						
⟨661⟩ *Plastic Packaging Systems and Their Materials of Construction*				•						
⟨661.1⟩ *Plastic Materials of Construction*				•						
⟨661.2⟩ *Plastic Packaging Systems for Pharmaceutical Use*				•						

afroozpharma@yahoo.com

Chart 7. Blood and Blood Products *(Continued)*

Chapter	Identification	Characterization	Equipment	Misc. Tests	Description	Safety	Assay	Physicochemical	Impurities: Process Related	Impurities: Product Related
⟨671⟩ *Containers—Performance Testing*				♦						
⟨695⟩ *Crystallinity*					♦					
⟨697⟩ *Container Content for Injections*				♦						
⟨731⟩ *Loss on Drying*									♦	
⟨736⟩ *Mass Spectrometry*	♦	♦					♦	♦	♦	♦
⟨761⟩ *Nuclear Magnetic Resonance Spectroscopy*	♦	♦					♦	♦	♦	♦
⟨785⟩ *Osmolality and Osmolarity*								♦		
⟨787⟩ *Subvisible Particulate Matter in Therapeutic Protein Injections*				♦						
⟨788⟩ *Particulate Matter in Injections*				♦						
⟨790⟩ *Visible Particulates in Injections*				♦						
⟨791⟩ *pH*					♦			♦		
⟨852⟩ *Atomic Absorption Spectroscopy*	♦	♦					♦	♦	♦	
⟨853⟩ *Fluorescence Spectroscopy*	♦	♦					♦	♦	♦	
⟨854⟩ *Mid-Infrared Spectroscopy*	♦	♦					♦	♦	♦	
⟨855⟩ *Nephelometry, Turbidimetry, and Visual Comparison*		♦					♦	♦	♦	
⟨857⟩ *Ultraviolet-Visible Spectroscopy*	♦	♦					♦	♦	♦	
⟨921⟩ *Water Determination*									♦	
⟨1030⟩ *Biological Assay Chapters—Overview and Glossary*	♦	♦					♦			
⟨1032⟩ *Design and Development of Biological Assays*	♦	♦					♦			
⟨1033⟩ *Biological Assay Validation*	♦	♦					♦			
⟨1034⟩ *Analysis of Biological Assays*	♦	♦					♦			
⟨1041⟩ *Biologics*					♦					
⟨1044⟩ *Cryopreservation of Cells*		♦								
⟨1052⟩ *Biotechnology Derived Articles—Amino Acid Analysis*	♦	♦					♦	♦	♦	
⟨1053⟩ *Capillary Electrophoresis*	♦	♦					♦	♦	♦	
⟨1054⟩ *Biotechnology Derived Articles—Isoelectric Focusing*	♦	♦					♦	♦	♦	
⟨1055⟩ *Biotechnology Derived Articles—Peptide Mapping*	♦	♦					♦	♦	♦	

afroozpharma@yahoo.com

Chart 7. Blood and Blood Products *(Continued)*

Chapter	Identification	Characterization	Equipment	Misc. Tests	Description	Safety	Assay	Physicochemical	Impurities: Process Related	Impurities: Product Related
⟨1056⟩ *Biotechnology Derived Articles—Polyacrylamide Gel Electrophoresis*	♦	♦					♦	♦	♦	
⟨1057⟩ *Biotechnology Derived Articles—Total Protein Assay*	♦	♦					♦	♦	♦	
⟨1065⟩ *Ion Chromatography*	♦									
⟨1102⟩ *Immunological Test Methods—General Considerations*	♦	♦							♦	♦
⟨1103⟩ *Immunological Test Methods—Enzyme-Linked Immunosorbent Assay (ELISA)*	♦	♦							♦	♦
⟨1104⟩ *Immunological Test Methods—Immunoblot Analysis*	♦	♦							♦	♦
⟨1105⟩ *Immunological Test Methods—Surface Plasmon Resonance*		♦					♦			
⟨1106⟩ *Immunogenicity Assays—Design and Validation of Immunoassays to Detect Anti-Drug Antibodies*						♦				
⟨1106.1⟩ *Immunogenicity Assays—Design and Validation of Assays to Detect Anti-Drug Neutralizing Antibody*						♦				
⟨1111⟩ *Microbiological Examination of Nonsterile Products: Acceptance Criteria for Pharmaceutical Preparations and Substances for Pharmaceutical Use*						♦				
⟨1113⟩ *Microbial Characterization, Identification, and Strain Typing*						♦				
⟨1116⟩ *Microbiological Control and Monitoring of Aseptic Processing Environments*						♦				
⟨1121⟩ *Nomenclature*					♦					
⟨1125⟩ *Nucleic Acid-Based Techniques—General*		♦								
⟨1130⟩ *Nucleic Acid-Based Techniques—Approaches for Detecting Trace Nucleic Acids (Residual DNA Testing)*		♦								
⟨1180⟩ *Human Plasma*						♦				
⟨1211⟩ *Sterilization and Sterility Assurance of Compendial Articles*						♦				
⟨1228⟩ *Depyrogenation*						♦				

afroozpharma@yahoo.com

Chart 7. Blood and Blood Products *(Continued)*

Chapter	Identification	Characterization	Equipment	Misc. Tests	Description	Safety	Assay	Physicochemical	Impurities: Process Related	Impurities: Product Related
⟨1228.1⟩ *Dry Heat Depyrogenation*						♦				
⟨1228.3⟩ *Depyrogenation by Filtration*						♦				
⟨1228.5⟩ *Endotoxin Indicators for Depyrogenation*						♦				
⟨1229⟩ *Sterilization of Compendial Articles*						♦				
⟨1229.4⟩ *Sterilizing Filtration of Liquids*						♦				
⟨1229.5⟩ *Biological Indicators for Sterilization*						♦				
⟨1229.13⟩ *Sterilization-in-Place*			♦							
⟨1237⟩ *Virology Test Methods*						♦				
⟨1240⟩ *Virus Testing of Human Plasma for Further Manufacture*						♦				
⟨1251⟩ *Weighing on an Analytical Balance*			♦							
⟨1660⟩ *Evaluation of the Inner Surface Durability of Glass Containers*				♦						
⟨1661⟩ *Evaluation of Plastic Packaging Systems and Their Materials of Construction with Respect to Their User Safety Impact*				♦						
⟨1663⟩ *Assessment of Extractables Associated with Pharmaceutical Packaging/Delivery Systems*				♦						
⟨1664⟩ *Assessment of Drug Product Leachables Associated with Pharmaceutical Packaging/Delivery Systems*				♦						
⟨1736⟩ *Applications of Mass Spectrometry*	♦	♦					♦	♦	♦	♦
⟨1761⟩ *Applications of Nuclear Magnetic Resonance Spectroscopy*	♦	♦					♦	♦	♦	♦
⟨1787⟩ *Measurement of Subvisible Particulate Matter in Therapeutic Protein Injections*				♦						
⟨1788⟩ *Methods for the Determination of Particulate Matter in Injections and Ophthalmic Solutions*				♦						
⟨1852⟩ *Atomic Absorption Spectroscopy—Theory and Practice*	♦	♦					♦	♦	♦	

afroozpharma@yahoo.com

Chart 7. Blood and Blood Products *(Continued)*

Chapter	Identification	Characterization	Equipment	Misc. Tests	Description	Safety	Assay	Physicochemical	Impurities	
									Process Related	Product Related
⟨1853⟩ *Fluorescence Spectroscopy—Theory and Practice*	•	•					•	•	•	
⟨1854⟩ *Mid-Infrared Spectroscopy—Theory and Practice*	•	•					•	•	•	
⟨1857⟩ *Ultraviolet-Visible Spectroscopy—Theory and Practice*	•	•					•	•	•	

Chart 8. Cell, Gene, and Tissue Based Products

Chapter	Universal Tests		Specific Tests[1,2]					
	Identification	Assay	Biocompatibility	Microbial/ Sterility Issues	Production Issues	Product Issues	Equipment	Characterization
⟨1⟩ *Injections and Implanted Drug Products (Parenterals)—Product Quality Tests*					•			
⟨11⟩ *USP Reference Standards*	•							
⟨31⟩ *Volumetric Apparatus*							•	
⟨41⟩ *Balances*							•	
⟨61⟩ *Microbiological Examination of Nonsterile Products: Microbial Enumeration Tests*				•				
⟨62⟩ *Microbiological Examination of Nonsterile Products: Tests for Specified Microorganisms*				•				
⟨63⟩ *Mycoplasma Tests*				•				
⟨71⟩ *Sterility Tests*				•				
⟨85⟩ *Bacterial Endotoxins Test*				•				
⟨87⟩ *Biological Reactivity Tests, In Vitro*			•					
⟨88⟩ *Biological Reactivity Tests, In Vivo*			•					
⟨90⟩ *Fetal Bovine Serum—Quality Attributes and Functionality Tests*					•			
⟨92⟩ *Growth Factors and Cytokines Used in Cell Therapy Manufacturing*					•			
⟨111⟩ *Design and Analysis of Biological Assays*								•
⟨151⟩ *Pyrogen Test*				•				
⟨161⟩ *Medical Devices—Bacterial Endotoxin and Pyrogen Tests*				•				
⟨381⟩ *Elastomeric Closures for Injections*						•		
⟨507⟩ *Protein Determination Procedures*								•
⟨621⟩ *Chromatography*		•						•

[1] For Functionality test, see ⟨881⟩ *Tensile Strength*.
[2] For Water test, see ⟨1231⟩ *Water for Pharmaceutical Purposes*.

afroozpharma@yahoo.com

Chart 8. Cell, Gene, and Tissue Based Products *(Continued)*

	Universal Tests		Specific Tests[1,2]					
Chapter	**Identification**	**Assay**	**Biocompatibility**	**Microbial/ Sterility Issues**	**Production Issues**	**Product Issues**	**Equipment**	**Characterization**
⟨785⟩ *Osmolality and Osmolarity*								◆
⟨787⟩ *Subvisible Particulate Matter in Therapeutic Protein Injections*								◆
⟨788⟩ *Particulate Matter in Injections*								◆
⟨791⟩ *pH*								◆
⟨797⟩ *Pharmaceutical Compounding—Sterile Preparations*					◆			
⟨905⟩ *Uniformity of Dosage Units*								◆
⟨911⟩ *Viscosity—Capillary Methods*								◆
⟨912⟩ *Viscosity—Rotational Methods*								◆
⟨913⟩ *Viscosity—Rolling Ball Method*								◆
⟨1024⟩ *Bovine Serum*					◆			
⟨1027⟩ *Flow Cytometry*								◆
⟨1030⟩ *Biological Assay Chapters—Overview and Glossary*	◆	◆						◆
⟨1031⟩ *The Biocompatibility of Materials Used in Drug Containers, Medical Devices, and Implants*			◆					
⟨1032⟩ *Design and Development of Biological Assays*	◆	◆						◆
⟨1033⟩ *Biological Assay Validation*	◆	◆						◆
⟨1034⟩ *Analysis of Biological Assays*	◆	◆						◆
⟨1041⟩ *Biologics*					◆			
⟨1043⟩ *Ancillary Materials for Cell, Gene, and Tissue-Engineered Products*					◆			
⟨1044⟩ *Cryopreservation of Cells*	◆	◆			◆			◆
⟨1046⟩ *Cellular and Tissue-Based Products*					◆	◆		◆
⟨1047⟩ *Gene Therapy Products*					◆			
⟨1048⟩ *Quality of Biotechnology Products: Analysis of the Expression Construct in Cells Used for Production of r-DNA Derived Protein Products*								◆
⟨1049⟩ *Quality of Biotechnological Products: Stability Testing of Biotechnological/Biological Products*								◆

[1] For Functionality test, see ⟨881⟩ *Tensile Strength*.
[2] For Water test, see ⟨1231⟩ *Water for Pharmaceutical Purposes*.

afroozpharma@yahoo.com

Chart 8. Cell, Gene, and Tissue Based Products *(Continued)*

	Universal Tests		Specific Tests[1,2]					
Chapter	**Identification**	**Assay**	**Biocompatibility**	**Microbial/ Sterility Issues**	**Production Issues**	**Product Issues**	**Equipment**	**Characterization**
⟨1050⟩ *Viral Safety Evaluation of Biotechnology Products Derived from Cell Lines of Human or Animal Origin*				♦				
⟨1051⟩ *Cleaning Glass Apparatus*							♦	
⟨1052⟩ *Biotechnology Derived Articles—Amino Acid Analysis*								♦
⟨1053⟩ *Capillary Electrophoresis*								♦
⟨1054⟩ *Biotechnology Derived Articles—Isoelectric Focusing*								♦
⟨1055⟩ *Biotechnology Derived Articles—Peptide Mapping*								♦
⟨1056⟩ *Biotechnology Derived Articles—Polyacrylamide Gel Electrophoresis*								♦
⟨1057⟩ *Biotechnology Derived Articles—Total Protein Assay*								♦
⟨1074⟩ *Excipient Biological Safety Evaluation Guidelines*					♦			
⟨1084⟩ *Glycoprotein and Glycan Analysis—General Considerations*								♦
⟨1086⟩ *Impurities in Drug Substances and Drug Products*						♦		
⟨1102⟩ *Immunological Test Methods—General Considerations*	♦	♦						♦
⟨1103⟩ *Immunological Test Methods—Enzyme-Linked Immunosorbent Assay (ELISA)*	♦	♦						♦
⟨1104⟩ *Immunological Test Methods—Immunoblot Analysis*	♦							♦
⟨1113⟩ *Microbial Characterization, Identification, and Strain Typing*				♦				
⟨1116⟩ *Microbiological Control and Monitoring of Aseptic Processing Environments*				♦				
⟨1121⟩ *Nomenclature*						♦		
⟨1126⟩ *Nucleic Acid-Based Techniques—Extraction, Detection, and Sequencing*					♦			♦
⟨1127⟩ *Nucleic Acid-Based Techniques—Amplification*					♦			♦
⟨1128⟩ *Nucleic Acid-Based Techniques—Microarray*								♦
⟨1129⟩ *Nucleic Acid-Based Techniques—Genotyping*								♦

[1] For Functionality test, see ⟨881⟩ *Tensile Strength*.
[2] For Water test, see ⟨1231⟩ *Water for Pharmaceutical Purposes*.

General Chapters

afroozpharma@yahoo.com

Chart 8. Cell, Gene, and Tissue Based Products *(Continued)*

	Universal Tests		Specific Tests[1,2]					
Chapter	**Identification**	**Assay**	**Biocompatibility**	**Microbial/ Sterility Issues**	**Production Issues**	**Product Issues**	**Equipment**	**Characterization**
⟨1130⟩ *Nucleic Acid-Based Techniques—Approaches for Detecting Trace Nucleic Acids (Residual DNA Testing)*								♦
⟨1151⟩ *Pharmaceutical Dosage Forms*						♦		
⟨1184⟩ *Sensitization Testing*			♦					
⟨1208⟩ *Sterility Testing—Validation of Isolator Systems*				♦				
⟨1211⟩ *Sterilization and Sterility Assurance of Compendial Articles*				♦				
⟨1227⟩ *Validation of Microbial Recovery from Pharmacopeial Articles*				♦				
⟨1228⟩ *Depyrogenation*				♦				
⟨1228.1⟩ *Dry Heat Depyrogenation*				♦				
⟨1228.3⟩ *Depyrogenation by Filtration*				♦				
⟨1228.5⟩ *Endotoxin Indicators for Depyrogenation*				♦				
⟨1229⟩ *Sterilization of Compendial Articles*				♦				
⟨1229.3⟩ *Monitoring of Bioburden*				♦				
⟨1229.4⟩ *Sterilizing Filtration of Liquids*				♦				
⟨1229.13⟩ *Sterilization-in-Place*							♦	
⟨1237⟩ *Virology Test Methods*					♦			♦
⟨1251⟩ *Weighing on an Analytical Balance*							♦	
⟨1285⟩ *Preparation of Biological Specimens for Histologic and Immunohistochemical Analysis*	♦				♦			♦
⟨1285.1⟩ *Hematoxylin and Eosin Staining of Sectioned Tissue for Microscopic Examination*	♦				♦			♦
⟨1787⟩ *Measurement of Subvisible Particulate Matter in Therapeutic Protein Injections*								♦
⟨1788⟩ *Methods for the Determination of Particulate Matter in Injections and Ophthalmic Solutions*								♦

[1] For Functionality test, see ⟨881⟩ *Tensile Strength*.
[2] For Water test, see ⟨1231⟩ *Water for Pharmaceutical Purposes*.

Chart 9. Drug Product Distribution

Chapter	Manufacturer	Shipper	Wholesaler	Sample Distribution	Repackager	Pharmacy	Practitioner
⟨7⟩ *Labeling*	♦						

afroozpharma@yahoo.com

Chart 9. Drug Product Distribution *(Continued)*

Chapter	Manufac-turer	Shipper	Wholesaler	Sample Distribution	Repackager	Phar-macy	Practi-tioner
⟨17⟩ *Prescription Container Labeling*						♦	
⟨87⟩ *Biological Reactivity Tests, In Vitro*	♦				♦	♦	
⟨88⟩ *Biological Reactivity Tests, In Vivo*	♦				♦	♦	
⟨381⟩ *Elastomeric Closures for Injections*	♦					♦	
⟨659⟩ *Packaging and Storage Requirements*	♦				♦	♦	
⟨660⟩ *Containers—Glass*	♦				♦	♦	
⟨661⟩ *Plastic Packaging Systems and Their Materials of Construction*	♦				♦	♦	
⟨661.1⟩ *Plastic Materials of Construction*	♦				♦	♦	
⟨661.2⟩ *Plastic Packaging Systems for Pharmaceutical Use*	♦				♦	♦	
⟨670⟩ *Auxiliary Packaging Components*	♦						
⟨671⟩ *Containers—Performance Testing*	♦				♦	♦	
⟨698⟩ *Deliverable Volume*	♦				♦		
⟨735⟩ *X-Ray Fluorescence Spectrometry*	♦				♦		
⟨755⟩ *Minimum Fill*	♦				♦		
⟨1066⟩ *Physical Environments That Promote Safe Medication Use*					♦	♦	♦
⟨1079⟩ *Good Storage and Distribution Practices for Drug Products*	♦	♦	♦	♦	♦	♦	
⟨1118⟩ *Monitoring Devices—Time, Temperature, and Humidity*	♦	♦	♦	♦	♦	♦	
⟨1136⟩ *Packaging and Repackaging—Single-Unit Containers*	♦				♦	♦	
⟨1151⟩ *Pharmaceutical Dosage Forms*	♦						
⟨1152⟩ *Animal Drugs for Use in Animal Feeds*	♦						♦
⟨1177⟩ *Good Packaging Practices*	♦	♦	♦	♦	♦	♦	
⟨1178⟩ *Good Repackaging Practices*					♦		
⟨1191⟩ *Stability Considerations in Dispensing Practice*	♦					♦	♦
⟨1265⟩ *Written Prescription Drug Information—Guidelines*						♦	
⟨1660⟩ *Evaluation of the Inner Surface Durability of Glass Containers*	♦				♦	♦	
⟨1661⟩ *Evaluation of Plastic Packaging Systems and Their Materials of Construction with Respect to Their User Safety Impact*	♦				♦	♦	

afroozpharma@yahoo.com

Chart 9. Drug Product Distribution *(Continued)*

Chapter	Manufacturer	Shipper	Wholesaler	Sample Distribution	Repackager	Pharmacy	Practitioner
⟨1663⟩ *Assessment of Extractables Associated with Pharmaceutical Packaging/Delivery Systems*	•						
⟨1664⟩ *Assessment of Drug Product Leachables Associated with Pharmaceutical Packaging/Delivery Systems*	•						

Chart 10a. Microbiology—Nonsterile Products

Chapter	Microbial Enumeration	Absence of Objectionable Microorganisms
⟨61⟩ *Microbiological Examination of Nonsterile Products: Microbial Enumeration Tests*	•	
⟨62⟩ *Microbiological Examination of Nonsterile Products: Tests for Specified Microorganisms*		•
⟨63⟩ *Mycoplasma Tests*		•
⟨610⟩ *Alternative Microbiological Sampling Methods for Nonsterile Inhaled and Nasal Products*	•	•
⟨1111⟩ *Microbiological Examination of Nonsterile Products: Acceptance Criteria for Pharmaceutical Preparations and Substances for Pharmaceutical Use*	•	•
⟨1113⟩ *Microbial Characterization, Identification, and Strain Typing*		•
⟨1115⟩ *Bioburden Control of Nonsterile Drug Substances and Products*		•
⟨2021⟩ *Microbial Enumeration Tests—Nutritional and Dietary Supplements*	•	
⟨2022⟩ *Microbiological Procedures for Absence of Specified Microorganisms—Nutritional and Dietary Supplements*		•
⟨2023⟩ *Microbiological Attributes for Nonsterile Nutritional and Dietary Supplements*	•	

Chart 10b. Microbiology—Sterile Products[1]

Chapter	Sterility Tests	Mycoplasma	Aseptic Processing	Filtration	Assembly[2]		Terminal Sterilization						
					Assembly	Other	Terminal Sterilization	Moist Heat	Dry Heat	Radiation	EtO	Liquid Phase	Vapor Phase
⟨55⟩ *Biological Indicators—Resistance Performance Tests*								•	•	•	•		
⟨63⟩ *Mycoplasma Tests*		•											
⟨71⟩ *Sterility Tests*	•												
⟨151⟩ *Pyrogen Tests*						•							
⟨1072⟩ *Disinfectants and Antiseptics*						•							

[1] For endotoxins limits, see ⟨85⟩ *Bacterial Endotoxins Test.*

[2] For BFS, FFS, and SFS, see ⟨1116⟩ *Microbiological Control and Monitoring of Aseptic Processing Environments.*

afroozpharma@yahoo.com

Chart 10b. Microbiology—Sterile Products[1] *(Continued)*

Chapter	Sterility Tests	Mycoplasma	Aseptic Processing	Filtration	Assembly[2]		Terminal Sterilization						
					Assembly	Other	Terminal Sterilization	Moist Heat	Dry Heat	Radiation	EtO	Liquid Phase	Vapor Phase
⟨1112⟩ *Application of Water Activity Determination to Nonsterile Pharmaceutical Products*						♦							
⟨1113⟩ *Microbial Characterization, Identification, and Strain Typing*	♦	♦	♦										
⟨1116⟩ *Microbiological Control and Monitoring of Aseptic Processing Environments*			♦		♦	♦							
⟨1117⟩ *Microbiological Best Laboratory Practices*						♦							
⟨1207⟩ *Package Integrity Evaluation—Sterile Products*					♦								
⟨1207.1⟩ *Package Integrity Testing in the Product Life Cycle—Test Method Selection and Validation*					♦								
⟨1207.2⟩ *Package Integrity Leak Test Technologies*					♦								
⟨1207.3⟩ *Package Seal Quality Test Technologies*					♦								
⟨1208⟩ *Sterility Testing—Validation of Isolator Systems*	♦		♦										

[1] For endotoxins limits, see ⟨85⟩ *Bacterial Endotoxins Test*.

[2] For BFS, FFS, and SFS, see ⟨1116⟩ *Microbiological Control and Monitoring of Aseptic Processing Environments*.

afroozpharma@yahoo.com

Chart 10b. Microbiology—Sterile Products[1] *(Continued)*

					Assembly[2]		Terminal Sterilization						
Chapter	**Sterility Tests**	**Mycoplasma**	**Aseptic Processing**	**Filtration**	**Assembly**	**Other**	**Terminal Sterilization**	**Moist Heat**	**Dry Heat**	**Radiation**	**EtO**	**Liquid Phase**	**Vapor Phase**
⟨1211⟩ *Sterilization and Sterility Assurance of Compendial Articles*			•	•				•	•	•	•		
⟨1222⟩ *Terminally Sterilized Pharmaceutical Products—Parametric Release*							•						
⟨1223⟩ *Validation of Alternative Microbiological Methods*						•							
⟨1228⟩ *Depyrogenation*			•	•	•		•	•	•	•	•		
⟨1228.1⟩ *Dry Heat Depyrogenation*			•		•		•		•				
⟨1228.3⟩ *Depyrogenation by Filtration*			•	•						•			
⟨1228.5⟩ *Endotoxin Indicators for Depyrogenation*			•	•	•		•		•				
⟨1229⟩ *Sterilization of Compendial Articles*			•	•	•		•	•	•	•	•		
⟨1229.1⟩ *Steam Sterilization by Direct Contact*								•					
⟨1229.2⟩ *Moist Heat Sterilization of Aqueous Liquids*								•					
⟨1229.3⟩ *Monitoring of Bioburden*			•	•				•		•			
⟨1229.4⟩ *Sterilizing Filtration of Liquids*			•	•									

[1] For endotoxins limits, see ⟨85⟩ *Bacterial Endotoxins Test*.
[2] For BFS, FFS, and SFS, see ⟨1116⟩ *Microbiological Control and Monitoring of Aseptic Processing Environments*.

afroozpharma@yahoo.com

Chart 10b. Microbiology—Sterile Products[1] *(Continued)*

					Assembly[2]		Terminal Sterilization						
Chapter	**Sterility Tests**	**Mycoplasma**	**Aseptic Processing**	**Filtration**	**Assembly**	**Other**	**Terminal Sterilization**	**Moist Heat**	**Dry Heat**	**Radiation**	**EtO**	**Liquid Phase**	**Vapor Phase**
⟨1229.5⟩ *Biological Indicators for Sterilization*								•	•	•	•		
⟨1229.6⟩ *Liquid-Phase Sterilization*					•							•	
⟨1229.7⟩ *Gaseous Sterilization*											•		
⟨1229.8⟩ *Dry Heat Sterilization*									•				
⟨1229.9⟩ *Physicochemical Integrators and Indicators for Sterilization*								•			•		
⟨1229.10⟩ *Radiation Sterilization*										•			
⟨1229.11⟩ *Vapor Phase Sterilization*					•								•
⟨1229.12⟩ *New Sterilization Methods*			•				•						
⟨1229.13⟩ *Sterilization-in-Place*							•	•	•		•	•	•

[1] For endotoxins limits, see ⟨85⟩ *Bacterial Endotoxins Test*.
[2] For BFS, FFS, and SFS, see ⟨1116⟩ *Microbiological Control and Monitoring of Aseptic Processing Environments*.

Chart 11. Dietary Supplement Ingredients

	Botanicals						Nonbotanicals[1,2]
Chapter	**Description**	**Identification**	**Content**	**Safety/ Purity**	**Physicochemical Characterization**	**Other**	**Vitamin Assays[3]**
⟨7⟩ *Labeling*	•						
⟨91⟩ *Calcium Pantothenate Assay*							•
⟨115⟩ *Dexpanthenol Assay*							•
⟨171⟩ *Vitamin B_{12} Activity Assay*							•
⟨197⟩ *Spectrophotometric Identification Tests*		•					
⟨201⟩ *Thin-Layer Chromatographic Identification Test*		•					
⟨202⟩ *Identification of Fixed Oils by Thin-Layer Chromatography*		•					
⟨203⟩ *High-Performance Thin-Layer Chromatography Procedure for Identification of Articles of Botanical Origin*		•					

[1] For complex see *Biotechnology-Derived Drug Substances (Chart 2)*.
[2] For noncomplex Minerals, Amino Acids, and Metabolites, see *Noncomplex Active Drug Substances (Chart 1)*.
[3] See also *Noncomplex Active Drug Substances (Chart 1)*.

afroozpharma@yahoo.com

Chart 11. Dietary Supplement Ingredients *(Continued)*

	Botanicals						Nonbotanicals[1,2]
Chapter	**Description**	**Identification**	**Content**	**Safety/ Purity**	**Physicochemical Characterization**	**Other**	**Vitamin Assays[3]**
⟨211⟩ *Arsenic*				♦			
⟨231⟩ *Heavy Metals*				♦			
⟨233⟩ *Elemental Impurities—Procedures*				♦			
⟨251⟩ *Lead*				♦			
⟨261⟩ *Mercury*				♦			
⟨281⟩ *Residue on Ignition*				♦			
⟨401⟩ *Fats and Fixed Oils*					♦		
⟨411⟩ *Folic Acid Assay*							♦
⟨441⟩ *Niacin or Niacinamide Assay*							♦
⟨451⟩ *Nitrate Titration*				♦			
⟨461⟩ *Nitrogen Determination*				♦			
⟨467⟩ *Residual Solvents*				♦			
⟨481⟩ *Riboflavin Assay*							♦
⟨531⟩ *Thiamine Assay*							♦
⟨541⟩ *Titrimetry*			♦				
⟨551⟩ *Vitamin E Assay*							♦
⟨561⟩ *Articles of Botanical Origin*	♦	♦	♦	♦	♦		
⟨563⟩ *Identification of Articles of Botanical Origin*	♦	♦					
⟨565⟩ *Botanical Extracts*	♦			♦			
⟨571⟩ *Vitamin A Assay*							♦
⟨581⟩ *Vitamin D Assay*							♦
⟨591⟩ *Zinc Determination*							♦
⟨611⟩ *Alcohol Determination*				♦			
⟨621⟩ *Chromatography*		♦	♦		♦		
⟨730⟩ *Plasma Spectrochemistry*				♦			
⟨731⟩ *Loss on Drying*				♦			
⟨733⟩ *Loss on Ignition*				♦			
⟨735⟩ *X-Ray Fluorescence Spectrometry*		♦		♦	♦		♦
⟨736⟩ *Mass Spectrometry*					♦		
⟨761⟩ *Nuclear Magnetic Resonance Spectroscopy*					♦		
⟨776⟩ *Optical Microscopy*	♦	♦					
⟨791⟩ *pH*					♦		
⟨852⟩ *Atomic Absorption Spectroscopy*			♦		♦		
⟨853⟩ *Fluorescence Spectroscopy*			♦		♦		
⟨854⟩ *Mid-Infrared Spectroscopy*			♦		♦		
⟨855⟩ *Nephelometry, Turbidimetry, and Visual Comparison*					♦		
⟨857⟩ *Ultraviolet-Visible Spectroscopy*			♦		♦		
⟨1064⟩ *Identification of Articles of Botanical Origin by High-Performance Thin-Layer Chromatography Procedure*		♦					
⟨1065⟩ *Ion Chromatography*					♦		
⟨1113⟩ *Microbial Characterization, Identification, and Strain Typing*				♦			
⟨1181⟩ *Scanning Electron Microscopy*	♦	♦					

[1] For complex see *Biotechnology-Derived Drug Substances (Chart 2)*.
[2] For noncomplex Minerals, Amino Acids, and Metabolites, see *Noncomplex Active Drug Substances (Chart 1)*.
[3] See also *Noncomplex Active Drug Substances (Chart 1)*.

General Chapters

afroozpharma@yahoo.com

Chart 11. Dietary Supplement Ingredients *(Continued)*

	Botanicals						Nonbotanicals[1,2]
Chapter	**Description**	**Identification**	**Content**	**Safety/ Purity**	**Physicochemical Characterization**	**Other**	**Vitamin Assays**[3]
⟨1225⟩ *Validation of Compendial Procedures*						♦	
⟨1226⟩ *Verification of Compendial Procedures*						♦	
⟨1736⟩ *Applications of Mass Spectrometry*					♦		
⟨1761⟩ *Applications of Nuclear Magnetic Resonance Spectroscopy*					♦		
⟨1852⟩ *Atomic Absorption Spectroscopy—Theory and Practice*			♦		♦		
⟨1853⟩ *Fluorescence Spectroscopy—Theory and Practice*			♦		♦		
⟨1854⟩ *Mid-Infrared Spectroscopy—Theory and Practice*			♦		♦		
⟨1857⟩ *Ultraviolet-Visible Spectroscopy—Theory and Practice*			♦		♦		
⟨2021⟩ *Microbial Enumeration Tests—Nutritional and Dietary Supplements*				♦			
⟨2022⟩ *Microbiological Procedures for Absence of Specified Microorganisms—Nutritional and Dietary Supplements*				♦			
⟨2023⟩ *Microbiological Attributes of Nonsterile Nutritional and Dietary Supplements*				♦			
⟨2030⟩ *Supplemental Information for Articles of Botanical Origin*						♦	
⟨2232⟩ *Elemental Contaminants in Dietary Supplements*				♦			
⟨2250⟩ *Detection of Irradiated Dietary Supplements*				♦			

[1] For complex see *Biotechnology-Derived Drug Substances (Chart 2)*.
[2] For noncomplex Minerals, Amino Acids, and Metabolites, see *Noncomplex Active Drug Substances (Chart 1)*.
[3] See also *Noncomplex Active Drug Substances (Chart 1)*.

Chart 12. Dietary Supplement Products

	Universal Tests						Specific Tests		
				Impurities					
Chapter	**Description**	**Identification**	**Assay/ Content**	**Organic**	**Inorganic**	**Residual Solvents**	**Equipment**	**Performance Tests**	**Safety/ Purity**
⟨7⟩ *Labeling*	♦								
⟨31⟩ *Volumetric Apparatus*							♦		
⟨41⟩ *Balances*							♦		
⟨91⟩ *Calcium Pantothenate Assay*			♦						
⟨171⟩ *Vitamin B_{12} Assay*			♦						
⟨191⟩ *Identification Tests—General*		♦							
⟨197⟩ *Spectrophotometric Identification Tests*		♦							
⟨201⟩ *Thin-Layer Chromatographic Identification Test*		♦							
⟨202⟩ *Identification of Fixed Oils by Thin-Layer Chromatography*		♦							

afroozpharma@yahoo.com

Chart 12. Dietary Supplement Products *(Continued)*

Chapter	Universal Tests						Specific Tests		
				Impurities					
	Description	Identification	Assay/ Content	Organic	Inorganic	Residual Solvents	Equipment	Performance Tests	Safety/ Purity
⟨203⟩ *High-Performance Thin-Layer Chromatography Procedure for Identification of Articles of Botanical Origin*		♦							
⟨211⟩ *Arsenic*									♦
⟨231⟩ *Heavy Metals*									♦
⟨251⟩ *Lead*									♦
⟨261⟩ *Mercury*									♦
⟨281⟩ *Residue on Ignition*					♦				
⟨411⟩ *Folic Acid Assay*			♦						
⟨441⟩ *Niacin or Niacinamide Assay*			♦						
⟨451⟩ *Nitrate Titration*									♦
⟨466⟩ *Ordinary Impurities*				♦					
⟨467⟩ *Residual Solvents*						♦			
⟨531⟩ *Thiamine Assay*			♦						
⟨541⟩ *Titrimetry*			♦						
⟨551⟩ *Vitamin E Assay*			♦						
⟨561⟩ *Articles of Botanical Origin*			♦						♦
⟨563⟩ *Identification of Articles of Botanical Origin*		♦							
⟨565⟩ *Botanical Extracts*									♦
⟨571⟩ *Vitamin A Assay*			♦						
⟨581⟩ *Vitamin D Assay*			♦						
⟨621⟩ *Chromatography*		♦	♦	♦		♦			
⟨730⟩ *Plasma Spectrochemistry*			♦		♦				♦
⟨733⟩ *Loss on Ignition*					♦				
⟨735⟩ *X-Ray Fluorescence Spectrometry*		♦	♦		♦				♦
⟨736⟩ *Mass Spectrometry*		♦							
⟨776⟩ *Optical Microscopy*		♦							
⟨781⟩ *Optical Rotation*				♦					
⟨782⟩ *Vibrational Circular Dichroism Spectroscopy*				♦					
⟨801⟩ *Polarography*				♦					
⟨852⟩ *Atomic Absorption Spectroscopy*		♦	♦	♦					
⟨853⟩ *Fluorescence Spectroscopy*		♦	♦	♦					
⟨854⟩ *Mid-Infrared Spectroscopy*		♦	♦	♦					
⟨855⟩ *Nephelometry, Turbidimetry, and Visual Comparison*			♦	♦					
⟨857⟩ *Ultraviolet-Visible Spectroscopy*		♦	♦	♦					
⟨1051⟩ *Cleaning Glass Apparatus*							♦		

afroozpharma@yahoo.com

Chart 12. Dietary Supplement Products *(Continued)*

Chapter	Universal Tests						Specific Tests		
				Impurities					
	Description	Identification	Assay/ Content	Organic	Inorganic	Residual Solvents	Equipment	Performance Tests	Safety/ Purity
⟨1064⟩ *Identification of Articles of Botanical Origin by High-Performance Thin-Layer Chromatography Procedure*		•							
⟨1065⟩ *Ion Chromatography*		•							
⟨1086⟩ *Impurities in Drug Substances and Drug Products*				•					
⟨1094⟩ *Capsules—Dissolution Testing and Related Quality Attributes*								•	
⟨1113⟩ *Microbial Characterization, Identification, and Strain Typing*									•
⟨1151⟩ *Pharmaceutical Dosage Forms*	•								
⟨1216⟩ *Tablet Friability*								•	
⟨1251⟩ *Weighing on an Analytical Balance*							•		
⟨1736⟩ *Applications of Mass Spectrometry*		•							
⟨1782⟩ *Vibrational Circular Dichroism Spectroscopy—Theory and Practice*				•					
⟨1852⟩ *Atomic Absorption Spectroscopy—Theory and Practice*		•	•	•					
⟨1853⟩ *Fluorescence Spectroscopy—Theory and Practice*		•	•	•					
⟨1854⟩ *Mid-Infrared Spectroscopy—Theory and Practice*		•	•	•					
⟨1857⟩ *Ultraviolet-Visible Spectroscopy—Theory and Practice*		•	•	•					
⟨2021⟩ *Microbiological Enumeration Tests—Nutritional and Dietary Supplements*									•
⟨2022⟩ *Microbiological Procedures for Absence of Specified Microorganisms—Nutritional and Dietary Supplements*									•
⟨2023⟩ *Microbiological Attributes of Nonsterile Nutritional and Dietary Supplements*									•
⟨2030⟩ *Supplemental Information for Articles of Botanical Origin*									•
⟨2040⟩ *Disintegration and Dissolution of Dietary Supplements*								•	
⟨2091⟩ *Weight Variation of Dietary Supplements*								•	
⟨2232⟩ *Elemental Contaminants in Dietary Supplements*					•				•
⟨2250⟩ *Detection of Irradiated Dietary Supplements*					•				

afroozpharma@yahoo.com

Chart 12. Dietary Supplement Products *(Continued)*

Chapter	Universal Tests						Specific Tests		
	Description	Identification	Assay/ Content	Impurities: Organic	Impurities: Inorganic	Impurities: Residual Solvents	Equipment	Performance Tests	Safety/ Purity
⟨2750⟩ *Manufacturing Practices for Dietary Supplements*							♦	♦	♦

Chart 13. Compounding—Substance/Preparation/Practice

Chapter	Global	Description	Identification	Assay	Packaging	Physicochemical Characterization	Safety	Equipment	Impurities: Process Related	Impurities: Product Related
⟨7⟩ *Labeling*		♦								
⟨11⟩ *USP Reference Standards*			♦	♦		♦	♦		♦	♦
⟨31⟩ *Volumetric Apparatus*								♦		
⟨41⟩ *Balances*								♦		
⟨61⟩ *Microbiological Examination of Nonsterile Products: Microbial Enumeration Tests*							♦			
⟨62⟩ *Microbiological Examination of Nonsterile Products: Tests for Specified Microorganisms*							♦			
⟨71⟩ *Sterility Tests*							♦			
⟨81⟩ *Antibiotics—Microbial Assays*									♦	
⟨85⟩ *Bacterial Endotoxins Test*							♦			
⟨87⟩ *Biological Reactivity Tests, In Vitro*							♦			
⟨88⟩ *Biological Reactivity Tests, In Vivo*							♦			
⟨111⟩ *Design and Analysis of Biological Assays*									♦	♦
⟨191⟩ *Identification Tests—General*			♦							
⟨197⟩ *Spectrophotometric Identification Tests*			♦					♦		

General Chapters

afroozpharma@yahoo.com

Chart 13. Compounding—Substance/Preparation/Practice *(Continued)*

Chapter	Global	Description	Identification	Assay	Packaging	Physicochemical Characterization	Safety	Equipment	Impurities: Process Related	Impurities: Product Related
⟨201⟩ *Thin-Layer Chromatographic Identification Test*			•							
⟨202⟩ *Identification of Fixed Oils by Thin-Layer Chromatography*			•							
⟨203⟩ *High-Performance Thin-Layer Chromatography Procedure for Identification of Articles of Botanical Origin*			•							
⟨231⟩ *Heavy Metals*									•	
⟨541⟩ *Titrimetry*				•					•	
⟨621⟩ *Chromatography*			•	•		•		•	•	•
⟨659⟩ *Packaging and Storage Requirements*					•					
⟨660⟩ *Containers—Glass*					•					
⟨661⟩ *Plastic Packaging Systems and Their Materials of Construction*					•					
⟨661.1⟩ *Plastic Materials of Construction*					•					
⟨661.2⟩ *Plastic Packaging Systems for Pharmaceutical Use*					•					
⟨671⟩ *Containers—Performance Testing*					•					
⟨730⟩ *Plasma Spectrochemistry*								•	•	
⟨731⟩ *Loss on Drying*									•	
⟨736⟩ *Mass Spectrometry*			•	•		•		•	•	•

afroozpharma@yahoo.com

Chart 13. Compounding—Substance/Preparation/Practice *(Continued)*

Chapter	Global	Description	Identification	Assay	Packaging	Physicochemical Characterization	Safety	Equipment	Impurities: Process Related	Impurities: Product Related
⟨761⟩ *Nuclear Magnetic Resonance Spectroscopy*			•	•		•		•	•	•
⟨781⟩ *Optical Rotation*				•						
⟨786⟩ *Particle Size Distribution Estimation by Analytical Sieving*						•				
⟨795⟩ *Pharmaceutical Compounding—Nonsterile Preparations*	•	•			•		•	•		
⟨797⟩ *Pharmaceutical Compounding—Sterile Preparations*	•	•			•		•	•		
⟨800⟩ *Hazardous Drugs—Handling in Healthcare Settings*	•				•		•	•		
⟨823⟩ *Positron Emission Tomography Drugs for Compounding, Investigational, and Research Uses*	•									
⟨831⟩ *Refractive Index*						•				
⟨852⟩ *Atomic Absorption Spectroscopy*			•	•		•		•	•	
⟨853⟩ *Fluorescence Spectroscopy*			•	•		•		•	•	
⟨854⟩ *Mid-Infrared Spectroscopy*			•	•		•		•	•	
⟨855⟩ *Nephelometry, Turbidimetry, and Visual Comparison*				•		•		•	•	
⟨857⟩ *Ultraviolet-Visible Spectroscopy*			•	•		•		•	•	

afroozpharma@yahoo.com

Chart 13. Compounding—Substance/Preparation/Practice *(Continued)*

Chapter	Global	Description	Identification	Assay	Packaging	Physicochemical Characterization	Safety	Equipment	Impurities	
									Process Related	Product Related
⟨921⟩ *Water Determination*									♦	
⟨1031⟩ *The Biocompatibility of Materials Used in Drug Containers, Medical Devices, and Implants*							♦			
⟨1052⟩ *Biotechnology-Derived Articles—Amino Acid Analysis*								♦	♦	
⟨1053⟩ *Capillary Electrophoresis*								♦	♦	
⟨1054⟩ *Biotechnology-Derived Articles—Isoelectric Focusing*								♦	♦	
⟨1055⟩ *Biotechnology-Derived Articles—Peptide Mapping*								♦	♦	
⟨1056⟩ *Biotechnology-Derived Articles—Polyacrylamide Gel Electrophoresis*								♦	♦	
⟨1057⟩ *Biotechnology-Derived Articles—Total Protein Assay*								♦	♦	
⟨1064⟩ *Identification of Articles of Botanical Origin by High-Performance Thin-Layer Chromatography Procedure*			♦							
⟨1065⟩ *Ion Chromatography*			♦							

afroozpharma@yahoo.com

Chart 13. Compounding—Substance/Preparation/Practice *(Continued)*

Chapter	Global	Description	Identification	Assay	Packaging	Physicochemical Characterization	Safety	Equipment	Impurities: Process Related	Impurities: Product Related
⟨1066⟩ *Physical Environments That Promote Safe Medication Use*							♦			
⟨1113⟩ *Microbial Characterization, Identification, and Strain Typing*							♦			
⟨1121⟩ *Nomenclature*		♦								
⟨1136⟩ *Packaging and Repackaging—Single-Unit Containers*					♦					
⟨1151⟩ *Pharmaceutical Dosage Forms*	♦									
⟨1152⟩ *Animal Drugs for Use in Animal Feeds*	♦									
⟨1160⟩ *Pharmaceutical Calculations in Pharmacy Practice*	♦						♦			
⟨1163⟩ *Quality Assurance in Pharmaceutical Compounding*	♦	♦		♦	♦		♦	♦		
⟨1176⟩ *Prescription Balances and Volumetric Apparatus Used in Compounding*	♦	♦					♦	♦		
⟨1191⟩ *Stability Considerations in Dispensing Practice*					♦					
⟨1228⟩ *Depyrogenation*							♦			
⟨1228.1⟩ *Dry Heat Depyrogenation*							♦			

Chart 13. Compounding—Substance/Preparation/Practice *(Continued)*

Chapter	Global	Description	Identification	Assay	Packaging	Physicochemical Characterization	Safety	Equipment	Impurities: Process Related	Impurities: Product Related
⟨1228.3⟩ *Depyrogenation by Filtration*							♦			
⟨1228.5⟩ *Endotoxin Indicators for Depyrogenation*							♦			
⟨1229⟩ *Sterilization of Compendial Articles*							♦			
⟨1229.2⟩ *Moist Heat Sterilization of Aqueous Liquids*							♦			
⟨1229.3⟩ *Monitoring of Bioburden*							♦			
⟨1229.4⟩ *Sterilizing Filtration of Liquids*							♦			
⟨1229.6⟩ *Liquid-Phase Sterilization*							♦			
⟨1229.7⟩ *Gaseous Sterilization*							♦			
⟨1229.8⟩ *Dry Heat Sterilization*							♦			
⟨1229.10⟩ *Radiation Sterilization*							♦			
⟨1229.11⟩ *Vapor Phase Sterilization*							♦			
⟨1229.12⟩ *New Sterilization Methods*							♦			
⟨1229.13⟩ *Sterilization-in-Place*							♦		-	
⟨1231⟩ *Water for Pharmaceutical Purposes*	♦									
⟨1251⟩ *Weighing on an Analytical Balance*								♦		
⟨1265⟩ *Written Prescription Drug Information—Guidelines*	♦									

Chart 13. Compounding—Substance/Preparation/Practice *(Continued)*

Chapter	Global	Description	Identification	Assay	Packaging	Physicochemical Characterization	Safety	Equipment	Impurities	
									Process Related	Product Related
〈1660〉 *Evaluation of the Inner Surface Durability of Glass Containers*					♦					
〈1661〉 *Evaluation of Plastic Packaging Systems and their Materials of Construction with Respect to Their User Safety Impact*					♦					
〈1663〉 *Assessment of Extractables Associated with Pharmaceutical Packaging/Delivery Systems*					♦					
〈1664〉 *Assessment of Drug Product Leachables Associated with Pharmaceutical Packaging/Delivery Systems*					♦					
〈1736〉 *Applications of Mass Spectrometry*			♦	♦		♦		♦	♦	♦
〈1761〉 *Applications of Nuclear Magnetic Resonance Spectroscopy*			♦	♦		♦		♦	♦	♦
〈1852〉 *Atomic Absorption Spectroscopy—Theory and Practice*			♦	♦		♦		♦	♦	
〈1853〉 *Fluorescence Spectroscopy—Theory and Practice*			♦	♦		♦		♦	♦	

Chart 13. Compounding—Substance/Preparation/Practice *(Continued)*

Chapter	Global	Description	Identification	Assay	Packaging	Physicochemical Characterization	Safety	Equipment	Impurities	
									Process Related	Product Related
⟨1854⟩ *Mid-Infrared Spectroscopy—Theory and Practice*			♦	♦		♦		♦	♦	
⟨1857⟩ *Ultraviolet-Visible Spectroscopy—Theory and Practice*			♦	♦		♦		♦	♦	

Guide to General Chapters

(For complete alphabetical list of all general chapters in this Pharmacopeia, see under "General chapters" in the index.)

GENERAL TESTS AND ASSAYS

General Requirements for Tests and Assays

⟨1⟩ Injections . . . 67
⟨2⟩ Oral Drug Products—Product Quality Tests . . . 74
⟨3⟩ Topical and Transdermal Drug Products—Product Quality Tests . . . 78
⟨4⟩ Mucosal Drug Products—Product Quality Tests . . . 86
⟨5⟩ Inhalation and Nasal Drug Products—General Information and Product Quality Tests . . . 90
⟨7⟩ Labeling . . . 98
⟨11⟩ USP Reference Standards . . . 104

Apparatus for Tests and Assays

⟨17⟩ Prescription Container Labeling . . . 107
⟨31⟩ Volumetric Apparatus . . . 110
⟨41⟩ Balances . . . 111

Microbiological Tests

⟨51⟩ Antimicrobial Effectiveness Testing . . . 111
⟨55⟩ Biological Indicators—Resistance Performance Tests . . . 114
⟨61⟩ Microbiological Examination of Nonsterile Products: Microbial Enumeration Tests . . . 117
⟨62⟩ Microbiological Examination of Nonsterile Products: Tests for Specified Microorganisms . . . 123
⟨63⟩ Mycoplasma Tests . . . 130
⟨71⟩ Sterility Tests . . . 136

Biological Tests and Assays

⟨81⟩ Antibiotics—Microbial Assays . . . 143
⟨85⟩ Bacterial Endotoxins Test . . . 163
⟨87⟩ Biological Reactivity Tests, In Vitro . . . 169
⟨88⟩ Biological Reactivity Tests, In Vivo . . . 172
⟨89⟩ Enzymes Used as Ancillary Materials in Pharmaceutical Manufacturing . . . 177
⟨89.1⟩ Collagenase I . . . 180
⟨89.2⟩ Collagenase II . . . 185
⟨90⟩ Fetal Bovine Serum—Quality Attributes and Functionality Tests . . . 190
⟨91⟩ Calcium Pantothenate Assay . . . 193
⟨92⟩ Growth Factors and Cytokines Used in Cell Therapy Manufacturing . . . 195
⟨111⟩ Design and Analysis of Biological Assays . . . 199
⟨115⟩ Dexpanthenol Assay . . . 203
⟨121⟩ Insulin Assays . . . 205
⟨121.1⟩ Physicochemical Analytical Procedures for Insulins . . . 207
⟨123⟩ Glucagon Bioidentity Tests . . . 210
⟨124⟩ Erythropoietin Bioassays . . . 213
⟨126⟩ Somatropin Bioidentity Tests . . . 214
⟨127⟩ Flow Cytometric Enumeration of CD34+ Cells . . . 216
⟨129⟩ Analytical Procedures for Recombinant Therapeutic Monoclonal Antibodies . . . 221
⟨130⟩ Protein A Quality Attributes . . . 227
⟨151⟩ Pyrogen Test . . . 234
⟨161⟩ Medical Devices—Bacterial Endotoxin and Pyrogen Tests . . . 236
⟨162⟩ Diphtheria Antitoxin Potency Testing for Human Immune Globulins . . . 239
⟨165⟩ Prekallikrein Activator . . . 241
⟨171⟩ Vitamin B_{12} Activity Assay . . . 242

Chemical Tests and Assays

Identification Tests

⟨181⟩ Identification—Organic Nitrogenous Bases . . . 245
⟨191⟩ Identification Tests—General . . . 245
⟨191⟩ Identification Tests—General . . . 251
⟨193⟩ Identification—Tetracyclines . . . 254
⟨197⟩ Spectrophotometric Identification Tests . . . 255
⟨201⟩ Thin-Layer Chromatographic Identification Test . . . 256
⟨202⟩ Identification of Fixed Oils By Thin-Layer Chromatography . . . 257
⟨203⟩ High-Performance Thin-Layer Chromatography Procedure for Identification of Articles of Botanical Origin . . . 258

Limit Tests

⟨206⟩ Aluminum . . . 260
⟨207⟩ Test for 1,6-Anhydro Derivative for Enoxaparin Sodium . . . 261
⟨208⟩ Anti-Factor Xa and Anti-Factor IIa Assays for Unfractionated and Low Molecular Weight Heparins . . . 266
⟨209⟩ Low Molecular Weight Heparin Molecular Weight Determinations . . . 270
⟨211⟩ Arsenic . . . 272
⟨212⟩ Oligosaccharide Analysis . . . 273
⟨221⟩ Chloride and Sulfate . . . 287
⟨223⟩ Dimethylaniline . . . 287
⟨226⟩ 4-Epianhydrotetracycline . . . 288
⟨227⟩ 4-Aminophenol in Acetaminophen-Containing Drug Products . . . 288
⟨228⟩ Ethylene Oxide and Dioxane . . . 290
⟨231⟩ Heavy Metals . . . 293
⟨232⟩ Elemental Impurities—Limits . . . 295
⟨233⟩ Elemental Impurities—Procedures . . . 298
⟨241⟩ Iron . . . 301
⟨251⟩ Lead . . . 302
⟨261⟩ Mercury . . . 303
⟨267⟩ Porosimetry by Mercury Intrusion . . . 306
⟨268⟩ Porosity by Nitrogen Adsorption–Desorption . . . 309
⟨271⟩ Readily Carbonizable Substances Test . . . 314
⟨281⟩ Residue on Ignition . . . 314
⟨291⟩ Selenium . . . 315

General Chapters

Other Tests and Assays

⟨301⟩ Acid-Neutralizing Capacity 316
⟨311⟩ Alginates Assay 317
⟨341⟩ Antimicrobial Agents—Content 318
⟨345⟩ Assay for Citric Acid/Citrate and Phosphate . . . 323
⟨351⟩ Assay for Steroids 324
⟨371⟩ Cobalamin Radiotracer Assay 324
⟨381⟩ Elastomeric Closures for Injections 326
⟨391⟩ Epinephrine Assay 331
⟨401⟩ Fats and Fixed Oils 332
⟨411⟩ Folic Acid Assay 345
⟨413⟩ Impurities Testing in Medical Gases 349
⟨415⟩ Medical Gases Assay 349
⟨425⟩ Iodometric Assay—Antibiotics 353
⟨429⟩ Light Diffraction Measurement of Particle Size 354
⟨431⟩ Methoxy Determination 359
⟨441⟩ Niacin or Niacinamide Assay 361
⟨451⟩ Nitrite Titration 366
⟨461⟩ Nitrogen Determination 366
⟨466⟩ Ordinary Impurities 368
⟨467⟩ Residual Solvents 369
⟨469⟩ Ethylene Glycol, Diethylene Glycol, and Triethylene Glycol in Ethoxylated Substances . . . 384
⟨471⟩ Oxygen Flask Combustion 385
⟨481⟩ Riboflavin Assay 386
⟨501⟩ Salts of Organic Nitrogenous Bases 392
⟨503⟩ Acetic Acid in Peptides 393
⟨503.1⟩ Trifluoroacetic Acid (TFA) in Peptides 394
⟨507⟩ Protein Determination Procedures 395
⟨511⟩ Single-Steroid Assay 400
⟨525⟩ Sulfur Dioxide 401
⟨531⟩ Thiamine Assay 407
⟨541⟩ Titrimetry 416
⟨551⟩ Vitamin E Assay 419
⟨561⟩ Articles of Botanical Origin 426
⟨563⟩ Identification of Articles of Botanical Origin . . . 440
⟨565⟩ Botanical Extracts 452
⟨571⟩ Vitamin A Assay 454
⟨580⟩ Vitamin C Assay 459
⟨581⟩ Vitamin D Assay 462
⟨591⟩ Zinc Determination 471

Physical Tests and Determinations

⟨601⟩ Inhalation and Nasal Drug Products: Aerosols, Sprays, and Powders—Performance Quality Tests 472
⟨602⟩ Propellants 498
⟨603⟩ Topical Aerosols 499
⟨604⟩ Leak Rate 500
⟨610⟩ Alternative Microbiological Sampling Methods for Nonsterile Inhaled and Nasal Products 501
⟨611⟩ Alcohol Determination 503
⟨616⟩ Bulk Density and Tapped Density of Powders 505
⟨621⟩ Chromatography 508
⟨631⟩ Color and Achromicity 520
⟨641⟩ Completeness of Solution 521
⟨643⟩ Total Organic Carbon 522
⟨645⟩ Water Conductivity 523
⟨651⟩ Congealing Temperature 527
⟨659⟩ Packaging and Storage Requirements 529
⟨660⟩ Containers—Glass 534
⟨661⟩ Plastic Packaging Systems and Their Materials of Construction 541
⟨661.1⟩ Plastic Materials of Construction 542
⟨661.2⟩ Plastic Packaging Systems for Pharmaceutical Use 554
⟨670⟩ Auxiliary Packaging Components 558
⟨671⟩ Containers—Performance Testing 565
⟨691⟩ Cotton 573
⟨695⟩ Crystallinity 575
⟨696⟩ Characterization of Crystalline Solids by Microcalorimetry and Solution Calorimetry . . . 575
⟨697⟩ Container Content for Injections 578
⟨698⟩ Deliverable Volume 579
⟨699⟩ Density of Solids 582
⟨701⟩ Disintegration 584
⟨705⟩ Quality Attributes of Tablets Labeled as Having a Functional Score 586
⟨711⟩ Dissolution 588
⟨721⟩ Distilling Range 598
⟨724⟩ Drug Release 600
⟨729⟩ Globule Size Distribution in Lipid Injectable Emulsions 607
⟨730⟩ Plasma Spectrochemistry 611
⟨731⟩ Loss on Drying 614
⟨733⟩ Loss on Ignition 615
⟨735⟩ X-Ray Fluorescence Spectrometry 615
⟨736⟩ Mass Spectrometry 620
⟨741⟩ Melting Range or Temperature 625
⟨755⟩ Minimum Fill 628
⟨761⟩ Nuclear Magnetic Resonance Spectroscopy . . . 629
⟨771⟩ Ophthalmic Products—Quality Tests 639
⟨776⟩ Optical Microscopy 645
⟨781⟩ Optical Rotation 648
⟨782⟩ Vibrational Circular Dichroism Spectroscopy . . 649
⟨785⟩ Osmolality and Osmolarity 656
⟨786⟩ Particle Size Distribution Estimation by Analytical Sieving 658
⟨787⟩ Subvisible Particulate Matter in Therapeutic Protein Injections 663
⟨788⟩ Particulate Matter in Injections 665
⟨789⟩ Particulate Matter in Ophthalmic Solutions . . . 669
⟨790⟩ Visible Particulates in Injections 671
⟨791⟩ pH 672
⟨795⟩ Pharmaceutical Compounding—Nonsterile Preparations 675
⟨797⟩ Pharmaceutical Compounding—Sterile Preparations 683
⟨800⟩ Hazardous Drugs—Handling In Healthcare Settings 727
⟨801⟩ Polarography 746
⟨811⟩ Powder Fineness 750
⟨821⟩ Radioactivity 751
⟨823⟩ Positron Emission Tomography Drugs for Compounding, Investigational, and Research Uses 758
⟨831⟩ Refractive Index 768
⟨841⟩ Specific Gravity 768
⟨846⟩ Specific Surface Area 769
⟨852⟩ Atomic Absorption Spectroscopy 773
⟨853⟩ Fluorescence Spectroscopy 777
⟨854⟩ Mid-Infrared Spectroscopy 783
⟨855⟩ Nephelometry, Turbidimetry, and Visual Comparison 787
⟨857⟩ Ultraviolet-Visible Spectroscopy 789
⟨861⟩ Sutures—Diameter 795
⟨871⟩ Sutures—Needle Attachment 796
⟨881⟩ Tensile Strength 797
⟨891⟩ Thermal Analysis 798
⟨905⟩ Uniformity of Dosage Units 802
⟨911⟩ Viscosity—Capillary Methods 806
⟨912⟩ Viscosity—Rotational Methods 808
⟨913⟩ Viscosity—Rolling Ball Method 812
⟨914⟩ Viscosity—Pressure Driven Methods 814
⟨921⟩ Water Determination 815
⟨941⟩ Characterization of Crystalline and Partially Crystalline Solids by X-Ray Powder Diffraction (XRPD) 820

GENERAL INFORMATION

⟨1004⟩ Mucosal Drug Products—Performance Tests . . 829
⟨1005⟩ Acoustic Emission 832

⟨1010⟩ Analytical Data—Interpretation and Treatment . . . 836
⟨1015⟩ Automated Radiochemical Synthesis Apparatus . . . 851
⟨1024⟩ Bovine Serum . . . 853
⟨1025⟩ Pancreatin . . . 866
⟨1027⟩ Flow Cytometry . . . 876
⟨1029⟩ Good Documentation Guidelines . . . 892
⟨1030⟩ Biological Assay Chapters—Overview and Glossary . . . 896
⟨1031⟩ The Biocompatibility of Materials Used in Drug Containers, Medical Devices, and Implants . . . 907
⟨1032⟩ Design and Development of Biological Assays . . . 917
⟨1033⟩ Biological Assay Validation . . . 935
⟨1034⟩ Analysis of Biological Assays . . . 950
⟨1039⟩ Chemometrics . . . 963
⟨1041⟩ Biologics . . . 981
⟨1043⟩ Ancillary Materials for Cell, Gene, and Tissue-Engineered Products . . . 982
⟨1044⟩ Cryopreservation of Cells . . . 990
⟨1046⟩ Cellular and Tissue-Based Products . . . 1002
⟨1047⟩ Gene Therapy Products . . . 1032
⟨1048⟩ Quality of Biotechnological Products: Analysis of the Expression Construct in Cells Used for Production of r-DNA Derived Protein Products . . . 1060
⟨1049⟩ Quality of Biotechnological Products: Stability Testing of Biotechnological/Biological Products . . . 1062
⟨1050⟩ Viral Safety Evaluation of Biotechnology Products Derived from Cell Lines of Human or Animal Origin . . . 1067
⟨1050.1⟩ Design, Evaluation, And Characterization of Viral Clearance Procedures . . . 1082
⟨1051⟩ Cleaning Glass Apparatus . . . 1092
⟨1052⟩ Biotechnology-Derived Articles—Amino Acid Analysis . . . 1093
⟨1053⟩ Capillary Electrophoresis . . . 1105
⟨1054⟩ Biotechnology-Derived Articles—Isoelectric Focusing . . . 1113
⟨1055⟩ Biotechnology-Derived Articles—Peptide Mapping . . . 1116
⟨1056⟩ Biotechnology-Derived Articles—Polyacrylamide Gel Electrophoresis . . . 1123
⟨1057⟩ Biotechnology-Derived Articles—Total Protein Assay . . . 1130
⟨1058⟩ Analytical Instrument Qualification . . . 1137
⟨1059⟩ Excipient Performance . . . 1143
⟨1061⟩ Color—Instrumental Measurement . . . 1172
⟨1063⟩ Shear Cell Methodology for Powder Flow Testing . . . 1175
⟨1064⟩ Identification of Articles of Botanical Origin by High-Performance Thin-Layer Chromatography Procedure . . . 1187
⟨1065⟩ Ion Chromatography . . . 1197
⟨1066⟩ Physical Environments That Promote Safe Medication Use . . . 1200
⟨1072⟩ Disinfectants and Antiseptics . . . 1212
⟨1074⟩ Excipient Biological Safety Evaluation Guidelines . . . 1217
⟨1078⟩ Good Manufacturing Practices for Bulk Pharmaceutical Excipients . . . 1222
⟨1079⟩ Good Storage and Distribution Practices for Drug Products . . . 1242
⟨1080⟩ Bulk Pharmaceutical Excipients—Certificate of Analysis . . . 1252
⟨1084⟩ Glycoprotein and Glycan Analysis—General Considerations . . . 1259
⟨1086⟩ Impurities in Drug Substances and Drug Products . . . 1270
⟨1087⟩ Apparent Intrinsic Dissolution—Dissolution Testing Procedures for Rotating Disk and Stationary Disk . . . 1273
⟨1088⟩ In Vitro and In Vivo Evaluation of Dosage Forms . . . 1277
⟨1090⟩ Assessment of Drug Product Performance—Bioavailability, Bioequivalence, and Dissolution . . . 1288
⟨1091⟩ Labeling of Inactive Ingredients . . . 1296
⟨1092⟩ The Dissolution Procedure: Development and Validation . . . 1296
⟨1094⟩ Capsules—Dissolution Testing and Related Quality Attributes . . . 1316
⟨1097⟩ Bulk Powder Sampling Procedures . . . 1324
⟨1102⟩ Immunological Test Methods—General Considerations . . . 1337
⟨1103⟩ Immunological Test Methods—Enzyme-Linked Immunosorbent Assay (ELISA) . . . 1344
⟨1104⟩ Immunological Test Methods—Immunoblot Analysis . . . 1355
⟨1105⟩ Immunological Test Methods—Surface Plasmon Resonance . . . 1366
⟨1106⟩ Immunogenicity Assays—Design and Validation of Immunoassays to Detect Anti-Drug Antibodies . . . 1382
⟨1106.1⟩ Immunogenicity Assays—Design and Validation of Assays to Detect Anti-Drug Neutralizing Antibody . . . 1397
⟨1111⟩ Microbiological Examination of Nonsterile Products: Acceptance Criteria for Pharmaceutical Preparations and Substances for Pharmaceutical Use . . . 1415
⟨1112⟩ Application of Water Activity Determination to Nonsterile Pharmaceutical Products . . . 1416
⟨1113⟩ Microbial Characterization, Identification, and Strain Typing . . . 1419
⟨1115⟩ Bioburden Control of Nonsterile Drug Substances and Products . . . 1423
⟨1116⟩ Microbiological Control and Monitoring of Aseptic Processing Environments . . . 1430
⟨1117⟩ Microbiological Best Laboratory Practices . . . 1443
⟨1118⟩ Monitoring Devices—Time, Temperature, and Humidity . . . 1449
⟨1119⟩ Near-Infrared Spectroscopy . . . 1455
⟨1120⟩ Raman Spectroscopy . . . 1461
⟨1121⟩ Nomenclature . . . 1469
⟨1125⟩ Nucleic Acid-Based Techniques—General . . . 1471
⟨1126⟩ Nucleic Acid-Based Techniques—Extraction, Detection, and Sequencing . . . 1477
⟨1127⟩ Nucleic Acid-Based Techniques—Amplification . . . 1487
⟨1128⟩ Nucleic Acid-Based Techniques—Microarray . . . 1497
⟨1129⟩ Nucleic Acid-Based Techniques—Genotyping . . . 1503
⟨1130⟩ Nucleic Acid-Based Techniques—Approaches for Detecting Trace Nucleic Acids (Residual DNA Testing) . . . 1507
⟨1132⟩ Residual Host Cell Protein Measurement in Biopharmaceuticals . . . 1511
⟨1136⟩ Packaging and Repackaging—Single-Unit Containers . . . 1532
⟨1151⟩ Pharmaceutical Dosage Forms . . . 1543
⟨1152⟩ Animal Drugs for Use in Animal Feeds . . . 1568
⟨1160⟩ Pharmaceutical Calculations in Pharmacy Practice . . . 1569
⟨1163⟩ Quality Assurance in Pharmaceutical Compounding . . . 1593
⟨1171⟩ Phase-Solubility Analysis . . . 1599
⟨1174⟩ Powder Flow . . . 1602
⟨1176⟩ Prescription Balances and Volumetric Apparatus . . . 1607
⟨1177⟩ Good Packaging Practices . . . 1613
⟨1178⟩ Good Repackaging Practices . . . 1616
⟨1180⟩ Human Plasma . . . 1618
⟨1181⟩ Scanning Electron Microscopy . . . 1641
⟨1184⟩ Sensitization Testing . . . 1651

⟨1191⟩ Stability Considerations in Dispensing Practice . . . 1662
⟨1195⟩ Significant Change Guide for Bulk Pharmaceutical Excipients . . . 1667
⟨1197⟩ Good Distribution Practices for Bulk Pharmaceutical Excipients . . . 1678
⟨1207⟩ Sterile Product Packaging—Integrity Evaluation . . . 1700
⟨1207.1⟩ Package Integrity Testing in the Product Life Cycle—Test Method Selection and Validation . . . 1707
⟨1207.2⟩ Package Integrity Leak Test Technologies . . . 1719
⟨1207.3⟩ Package Seal Quality Test Technologies . . . 1736
⟨1208⟩ Sterility Testing—Validation of Isolator Systems . . . 1739
⟨1211⟩ Sterilization and Sterility Assurance of Compendial Articles . . . 1744
⟨1216⟩ Tablet Friability . . . 1749
⟨1217⟩ Tablet Breaking Force . . . 1750
⟨1222⟩ Terminally Sterilized Pharmaceutical Products—Parametric Release . . . 1753
⟨1223⟩ Validation of Alternative Microbiological Methods . . . 1756
⟨1223.1⟩ Validation of Alternative Methods to Antibiotic Microbial Assays . . . 1770
⟨1224⟩ Transfer of Analytical Procedures . . . 1778
⟨1225⟩ Validation of Compendial Procedures . . . 1780
⟨1226⟩ Verification of Compendial Procedures . . . 1786
⟨1227⟩ Validation of Microbial Recovery from Pharmacopeial Articles . . . 1787
⟨1228⟩ Depyrogenation . . . 1791
⟨1228.1⟩ Dry Heat Depyrogenation . . . 1795
⟨1228.3⟩ Depyrogenation by Filtration . . . 1799
⟨1228.5⟩ Endotoxin Indicators For Depyrogenation . . . 1803
⟨1229⟩ Sterilization of Compendial Articles . . . 1807
⟨1229.1⟩ Steam Sterilization by Direct Contact . . . 1812
⟨1229.2⟩ Moist Heat Sterilization of Aqueous Liquids . . . 1815
⟨1229.3⟩ Monitoring of Bioburden . . . 1820
⟨1229.4⟩ Sterilizing Filtration of Liquids . . . 1824
⟨1229.5⟩ Biological Indicators for Sterilization . . . 1831
⟨1229.6⟩ Liquid-Phase Sterilization . . . 1834
⟨1229.7⟩ Gaseous Sterilization . . . 1837
⟨1229.8⟩ Dry Heat Sterilization . . . 1840
⟨1229.9⟩ Physicochemical Integrators And Indicators for Sterilization . . . 1842
⟨1229.10⟩ Radiation Sterilization . . . 1843
⟨1229.11⟩ Vapor Phase Sterilization . . . 1847
⟨1229.12⟩ New Sterilization Methods . . . 1848
⟨1229.13⟩ Sterilization-In-Place . . . 1849
⟨1230⟩ Water for Hemodialysis Applications . . . 1851
⟨1231⟩ Water for Pharmaceutical Purposes . . . 1852
⟨1234⟩ Vaccines for Human Use—Polysaccharide and Glycoconjugate Vaccines . . . 1888
⟨1235⟩ Vaccines for Human Use—General Considerations . . . 1905
⟨1237⟩ Virology Test Methods . . . 1922
⟨1238⟩ Vaccines for Human Use—Bacterial Vaccines . . . 1943
⟨1240⟩ Virus Testing of Human Plasma for Further Manufacture . . . 1956
⟨1241⟩ Water–Solid Interactions in Pharmaceutical Systems . . . 1966
⟨1251⟩ Weighing on an Analytical Balance . . . 1970
⟨1265⟩ Written Prescription Drug Information—Guidelines . . . 1976
⟨1285⟩ Preparation of Biological Specimens for Histologic and Immunohistochemical Analysis . . . 1978
⟨1285.1⟩ Hematoxylin and Eosin Staining of Sectioned Tissue for Microscopic Examination . . . 1982
⟨1601⟩ Products for Nebulization—Characterization Tests . . . 1984
⟨1602⟩ Spacers and Valved Holding Chambers Used With Inhalation Aerosols—Characterization Tests . . . 1988
⟨1644⟩ Theory and Practice of Electrical Conductivity Measurements of Solutions . . . 2000
⟨1660⟩ Evaluation of the Inner Surface Durability of Glass Containers . . . 2007
⟨1661⟩ Evaluation of Plastic Packaging Systems and Their Materials of Construction with Respect to Their User Safety Impact . . . 2012
⟨1663⟩ Assessment of Extractables Associated with Pharmaceutical Packaging/Delivery Systems . . . 2020
⟨1664⟩ Assessment of Drug Product Leachables Associated with Pharmaceutical Packaging/Delivery Systems . . . 2035
⟨1664.1⟩ Orally Inhaled and Nasal Drug Products . . . 2048
⟨1724⟩ Semisolid Drug Products—Performance Tests . . . 2055
⟨1730⟩ Plasma Spectrochemistry—Theory and Practice . . . 2067
⟨1735⟩ X-Ray Fluorescence Spectrometry—Theory and Practice . . . 2074
⟨1736⟩ Applications of Mass Spectrometry . . . 2093
⟨1761⟩ Applications of Nuclear Magnetic Resonance Spectroscopy . . . 2115
⟨1771⟩ Ophthalmic Products—Performance Tests . . . 2135
⟨1782⟩ Vibrational Circular Dichroism Spectroscopy—Theory and Practice . . . 2136
⟨1787⟩ Measurement of Subvisible Particulate Matter in Therapeutic Protein Injections . . . 2149
⟨1788⟩ Methods for the Determination of Particulate Matter in Injections and Ophthalmic Solutions . . . 2163
⟨1821⟩ Radioactivity—Theory and Practice . . . 2177
⟨1823⟩ Positron Emission Tomography Drugs—Information . . . 2190
⟨1852⟩ Atomic Absorption Spectroscopy—Theory and Practice . . . 2201
⟨1853⟩ Fluorescence Spectroscopy—Theory and Practice . . . 2211
⟨1854⟩ Mid-Infrared Spectroscopy—Theory and Practice . . . 2220
⟨1857⟩ Ultraviolet-Visible Spectroscopy—Theory and Practice . . . 2229
⟨1911⟩ Rheometry . . . 2238

DIETARY SUPPLEMENTS

⟨2021⟩ Microbial Enumeration Tests—Nutritional and Dietary Supplements . . . 2245
⟨2022⟩ Microbiological Procedures for Absence of Specified Microorganisms—Nutritional and Dietary Supplements . . . 2250
⟨2023⟩ Microbiological Attributes of Nonsterile Nutritional and Dietary Supplements . . . 2256
⟨2030⟩ Supplemental Information for Articles of Botanical Origin . . . 2260
⟨2040⟩ Disintegration and Dissolution of Dietary Supplements . . . 2270
⟨2091⟩ Weight Variation of Dietary Supplements . . . 2277
⟨2232⟩ Elemental Contaminants in Dietary Supplements . . . 2278
⟨2250⟩ Detection of Irradiated Dietary Supplements . . . 2282
⟨2251⟩ Screening for Undeclared Drugs and Drug Analogs . . . 2285
⟨2750⟩ Manufacturing Practices for Dietary Supplements . . . 2303

General Chapters

General Tests and Assays

General Requirements for Tests and Assays

⟨1⟩ INJECTIONS AND IMPLANTED DRUG PRODUCTS (PARENTERALS)—PRODUCT QUALITY TESTS

Change to read:

•INTRODUCTION
PRODUCT QUALITY TESTS COMMON TO PARENTERAL DOSAGE FORMS
Universal Tests
Specific Tests
PRODUCT QUALITY TESTS FOR SPECIFIC PARENTERAL DOSAGE FORMS
Solutions
Sterile Powders for Solutions
Suspensions
Liposomes
Sterile Powders for Suspensions
Emulsions
Implants
Drug-Eluting Stents• (RB 1-May-2016)

Change to read:

INTRODUCTION

Parenteral drug products include both injections and implanted drug products that are injected through the skin or other external boundary tissue, or implanted within the body to allow the direct administration of the active drug substance(s) into blood vessels, organs, tissues, or lesions. Injections may exist as either immediate- or extended-release dosage forms. Implanted parenteral drug products are long-acting dosage forms that provide continuous release of the active drug substance(s), often for periods of months to years. For systemic delivery, they may be placed subcutaneously; for local delivery, they may be placed in a specific region of the body. Routes of administration for parenteral drug products include intravenous, intraventricular, intra-arterial, intra-articular, subcutaneous, intramuscular, intrathecal, intracisternal, and intraocular.

Parenteral dosage forms include solutions, suspensions, emulsions, sterile powders for solutions and suspensions (including liposomes), implants (including microparticles), and products that consist of both a drug and a device such as drug-eluting stents. •The definitions and descriptions of these dosage forms, and brief information about their composition and manufacturing processes, are found in *Pharmaceutical Dosage Forms* ⟨1151⟩. [NOTE—All references to chapters above 1000 are for informational purposes only, for use as a helpful resource. These chapters are not mandatory unless explicitly called out for application.]• (RB 1-May-2016)

•• (RB 1-May-2016) This chapter is divided into •three• (RB 1-May-2016) main sections: (1) universal product quality tests that are applicable to parental dosage forms; (2) specific product quality tests, which are tests that should be considered in addition to *Universal Tests*; •and• (RB 1-May-2016) (3) product quality tests for specific dosage forms, which list •• (RB 1-May-2016) applicable tests (universal and specific) for the specific dosage form.

•This chapter applies, in whole or in part, when referenced in a drug product monograph (see *General Notices, 3.10 Applicability of Standards*).• (RB 1-May-2016)

The pharmacopeial definitions for sterile preparations for parenteral use may not apply to some biologics because of their special nature and licensing requirements (see *Biologics* ⟨1041⟩). However, some biological finished drug products containing "Injection" in the monograph title must meet the requirements of ⟨1⟩ or indicated chapter subparts, where it is specified in the monograph.
●● (RB 1-May-2016)

Change to read:

PRODUCT QUALITY TESTS COMMON TO PARENTERAL DOSAGE FORMS

Universal Tests

Universal tests are listed below and are applicable to parenteral dosage forms.
●● (RB 1-May-2016)

IDENTIFICATION

Identification tests are discussed in *General Notices and Requirements 5.40.*
●● (RB 1-May-2016)

ASSAY

A specific and stability-indicating test should be used to determine the strength (content) of the drug product. In cases where the use of a nonspecific assay is justified, other supporting analytical procedures should be used to achieve overall specificity. A specific procedure should be used when there is evidence of excipient interference with the nonspecific assay.

IMPURITIES

Tests for *Impurities* are discussed in *General Notices and Requirements 5.60.*
●● (RB 1-May-2016)

FOREIGN AND PARTICULATE MATTER

Articles intended for parenteral administration should be prepared in a manner designed to exclude particulate matter as defined in *Subvisible Particulate Matter in Therapeutic Protein Injections* ⟨787⟩, *Particulate Matter in Injections* ⟨788⟩, ●or● (RB 1-May-2016) *Particulate Matter in Ophthalmic Solutions* ⟨789⟩, as well as excluding other foreign matter as appropriate for the dosage form. Each final container of all parenteral preparations should be inspected to the extent possible for the presence of observable foreign and particulate matter (hereafter termed visible particulates) in its contents. The inspection process should be designed and qualified to ensure that every lot of all parenteral preparations is essentially free from visible particulates, as defined in *Visible Particulates in Injections* ⟨790⟩. Qualification of the inspection process should be performed with reference to particulates in the visible range and those particulates that might emanate from the manufacturing or filling process. Every container in which the contents show evidence of visible particulates must be rejected. The inspection for visible particulates may take place during examination for other ●● (RB 1-May-2016) defects such as cracked or defective containers or seals, or when characterizing the appearance of a lyophilized product.

When the nature of the contents or the container–closure system permits only limited inspection of the total contents, the 100% inspection of a lot should be supplemented with the inspection of constituted (e.g., dried) or withdrawn (e.g., from a dark amber container) contents of a sample of containers from the lot.

Large-volume injections for single-dose infusion, small-volume injections, and pharmacy bulk packages (PBPs) are subject to the light obscuration or microscopic procedures and limits for subvisible particulate matter set forth in ⟨788⟩, unless otherwise specified in the chapter or in the individual monograph. An article packaged as both a large-volume and a small-volume injection meets the requirements set forth for small-volume injections where the container is labeled as containing 100 mL or less. It meets the requirements set forth for large-volume injections for single-dose infusion where the container is labeled as containing more than 100 mL.

STERILITY

The sterility of all drug products intended for parenteral administration should be confirmed by the use of methods described in *Sterility Tests* ⟨71⟩ or by an approved alternative method.

BACTERIAL ENDOTOXINS

All articles intended for parenteral administration should be prepared in a manner designed to limit bacterial endotoxins as defined in *Bacterial Endotoxins Test* ⟨85⟩ or *Pyrogen Test* ⟨151⟩.

CONTAINER CONTENT

Container contents should be determined when appropriate (see *Container Content for Injections* ⟨697⟩).

●PACKAGING SYSTEMS● (RB 1-May-2016)

The packaging system should not interact physically or chemically with the preparation to alter its strength, quality, or purity beyond the official or established requirements. The packaging system should meet the requirements in *Elastomeric Closures for Injections* ⟨381⟩, *Packaging and Storage Requirements* ⟨659⟩, *Containers—Glass* ⟨660⟩, *Plastic Packaging Systems and their Materials of Construction* ⟨661⟩, *Plastic Materials of Construction* ⟨661.1⟩, and *Plastic Packaging Systems for Pharmaceutical Use* ⟨661.2⟩. Further information regarding packaging systems testing may be found in *Assessment of Extractables Associated with Pharmaceutical Packaging/Delivery Systems* ⟨1663⟩ and *Assessment of Drug Product Leachables Associated with Pharmaceutical Packaging/Delivery Systems* ⟨1664⟩.

CONTAINER–CLOSURE INTEGRITY

The packaging system should be closed or sealed in such a manner as to prevent contamination or loss of contents. Validation of container integrity must demonstrate no penetration of microbial contamination or gain or loss of any chemical or physical parameter deemed necessary to protect the product (see ●*Package Integrity Evaluation—Sterile Products* ⟨1207⟩, *Package Integrity Testing in the Product Life Cycle—Test Method Selection and Validation* ⟨1207.1⟩, *Package Integrity Leak Test Technologies* ⟨1207.2⟩, and *Package Seal Quality Test Technologies* ⟨1207.3⟩).● (RB 1-May-2016)

LABELING

All articles intended for parenteral administration should meet the labeling requirements defined in *Labeling* ⟨7⟩.

Specific Tests

In addition to the *Universal Tests* listed above, the following specific tests may be ●necessary depending on the dosage form.● (RB 1-May-2016)
●● (RB 1-May-2016)

UNIFORMITY OF DOSAGE UNITS

This test is applicable for parenteral drug products and dosage forms packaged in single-unit containers. It includes both the mass of the dosage form and the content of the active substance in the dosage form (see *Uniformity of Dosage Units* ⟨905⟩).

VEHICLES AND ADDED SUBSTANCES

There are other vehicles, both aqueous and nonaqueous, beyond those that are discussed below. All vehicles should be suitable for their intended use and not impact drug product quality.
Aqueous vehicles: Aqueous vehicles must meet the requirements of ⟨151⟩ or ⟨85⟩, whichever is specified in the monograph. Water for injection is generally used as the vehicle. Sodium chloride or dextrose may be added to render the resulting solution isotonic, and sodium chloride injection or Ringer's injection may be used in whole or in part instead of water for injection.
Nonaqueous vehicles: Fixed oils are classified under *Nonaqueous vehicles*. Fixed oils used as vehicles are of vegetable origin and are odorless. They meet the requirements in the test for *Solid Paraffin* in the *Mineral Oil* monograph with the cooling bath maintained at 10°.
●Nonaqueous vehicles should● (RB 1-May-2016) also meet the requirements of the following tests:

- *Fats and Fixed Oils* ⟨401⟩, *Saponification Value*: Between 185 and 200
- *Fats and Fixed Oils* ⟨401⟩, *Iodine Value*: Between 79 and 141
- *Fats and Fixed Oils* ⟨401⟩, *Unsaponifiable Matter*: NMT 1.5%
- *Fats and Fixed Oils* ⟨401⟩, *Acid Value*: NMT 0.2
- *Fats and Fixed Oils* ⟨401⟩, *Peroxide Value*: NMT 5.0
- *Water Determination* ⟨921⟩, *Method Ic*: NMT 0.1%

General Chapters

- *Limit of Copper, Iron, Lead, and Nickel*: [NOTE—The test for nickel is not required if the oil has not been subjected to hydrogenation, or a nickel catalyst has not been used in processing.] Proceed as directed in *Fats and Fixed Oils* ⟨401⟩, *Trace Metals* or *Elemental Impurities—Procedures* ⟨233⟩. Meet the requirements in *Elemental Impurities—Limits* ⟨232⟩.

Synthetic mono- or diglycerides of fatty acids may be used provided they are liquid and remain clear when cooled to 10° and have a *Iodine Value* of NMT 140.

Added substances: Suitable substances may be added to preparations in order to increase stability or usefulness unless they are proscribed in the monograph. No coloring agent may be added to a preparation solely for the purpose of coloring the finished preparation (see *General Notices and Requirements 5.20* and *Antimicrobial Effectiveness Testing* ⟨51⟩).

Observe special care in the choice and use of added substances in preparations with volumes that exceed 5 mL. The following limits prevail unless otherwise directed:

- Mercury and cationic surface-active agents: NMT 0.01%
- Chlorobutanol, cresol, phenol, and similar substances: NMT 0.5%
- Sulfur dioxide or an equivalent amount of sulfite, bisulfite, or metabisulfite of potassium or sodium: NMT 0.2%

ANTIMICROBIAL PRESERVATIVES

Antimicrobial agents must be added to preparations intended for injection that are packaged in multiple-dose containers unless one of the following conditions prevails: (1) there are different directions in the individual monograph; (2) the substance contains a radionuclide with a physical half-life of less than 24 h; or (3) the active ingredients are themselves antimicrobial. Substances must meet the requirements of ⟨51⟩ and *Antimicrobial Agents—Content* ⟨341⟩.

WATER CONTENT

The water content of freeze-dried (lyophilized) products should be determined when appropriate (see ⟨921⟩).
●● (RB 1-May-2016)

ALUMINUM CONTENT

●See *Labeling* ⟨7⟩, *Aluminum in Large-Volume Injections (LVIs), Small-Volume Injections (SVIs), and Pharmacy Bulk Packages (PBPs) Used in Parenteral Nutrition Therapy* for information related to specific labeling requirements associated with aluminum content.● (RB 1-May-2016)

COMPLETENESS AND CLARITY OF SOLUTIONS

The following tests are performed to demonstrate suitability of constituted solutions prepared before administration. Constitute the solution as directed in the labeling supplied by the manufacturer:

- The solid dissolves completely, leaving no undissolved matter.
- The constituted solution is not significantly less clear than an equal volume of the diluent or of purified water contained in a similar vessel and examined similarly. Protein solutions may exhibit an inherent opalescence.

The constituted solution is free from particulate matter that can be observed on visual inspection (see ⟨790⟩).

Change to read:

PRODUCT QUALITY TESTS FOR SPECIFIC PARENTERAL DOSAGE FORMS

Product quality tests for the specific dosage forms are listed below. Specific chapter(s) referenced for the test can be found in the *Universal Tests* and *Specific Tests* sections. ●● (RB 1-May-2016)

Solutions

A solution is a clear, homogeneous liquid dosage form that contains one or more chemical substances (e.g., drug substances or excipients) dissolved in a solvent (aqueous or nonaqueous) or a mixture of mutually miscible solvents. Solutions intended for parenteral administration (e.g., by injection or for irrigation) must be sterile and biocompatible with the intended administration site. This includes consideration of factors such as tonicity, pH, pyrogenicity, extraneous particulate matter, and physicochemical compatibility, among others.

Unless otherwise justified, the following tests are required for solutions for injection:

- *Universal Tests*
- *Specific Tests*
  - ●● (RB 1-May-2016)
  - — *Antimicrobial Preservatives*

Sterile Powders for Solutions

Sterile powders for solutions (also referred to as sterile powders for injection) consist of drug substances and other components as dry-formulation ingredients to ensure the chemical and physical stability of the presentation within a final-use container. Companion sterile diluent or diluent compartments may be provided to facilitate constitution to the desired final volume.

The sterile article for injection may be presented in several forms: lyophilized powder intended for final solution, powdered solids intended for final solution, or dry solids that form viscous liquids upon constitution.

The description should include a section that deals with ease of dispersion and reconstitution. The dosage form is a homogeneous solid that is readily constituted to the final form with the specified diluent, and dispersion is completed with gentle agitation.

Unless otherwise justified, the following tests apply to sterile powders for injection:

- *Universal Tests*

●● (RB 1-May-2016)

The following applies to constituted solutions:

- Chapter ⟨905⟩: To ensure the consistency of dosage units, each unit in a batch should have a drug substance content within a narrow range around the label claim. Dosage units are defined as dosage forms that contain a single dose or a part of a dose of drug substance in each unit. For liquid dosage forms analysts should conduct the assay on an amount of well-mixed constituted material that is removed from an individual container under conditions of normal use, should express the results as delivered dose, and should calculate the acceptance value.

●The following applies to dry cake:● (RB 1-May-2016)

- *Loss on Drying* ⟨731⟩: The procedure set forth in this chapter determines the amount of volatile matter of any kind that is driven off under the conditions specified.
- Chapter ⟨921⟩: Water or solvent content may have important effects on reconstitution and stability. For articles that require water or solvent content control, analysts should perform one of the ●● (RB 1-May-2016) methods ●described in ⟨921⟩● (RB 1-May-2016) or a suitable replacement.
- *Appearance*: Analysts should assess the level of and the unit variation for the following parameters:
  - — Color of Dry Cake: Varies within target parameters
  - — Texture and Homogeneity of Dry Cake: Varies within target parameters
  - — Presence of Foreign Material: All units with visible foreign material must be rejected

●● (RB 1-May-2016)

Suspensions

Parenteral suspensions are liquid dosage forms that contain solid particles in a state of uniform dispersion. Suspensions for parenteral administration must be sterile and compatible with the administration site. Consideration should be given to pH and pyrogenicity, and appropriate limits should be identified. Physical stability evaluations of parenteral suspension preparations should include evaluations to confirm that the particle size range of suspended matter does not change with time and to confirm that the solids in the preparation can be readily resuspended to yield a uniform preparation.

●● (RB 1-May-2016)The following tests are required for suspensions for injection unless otherwise justified:

- *Universal Tests*
- *Specific Tests*
  ●● (RB 1-May-2016)
  - — *Uniformity of Dosage Units*
  - — *Antimicrobial Preservatives*

Liposomes

Liposomes are unique drug products with unique properties that can be either solutions or suspensions. Liposomes are aqueous dispersions of amphiphilic lipids and have low water solubility. They are organized as a bilayer sheet that encloses an internal aqueous compartment and are known as lipid bilayer vesicles. Liposomes can have a single lipid bilayer (unilamellar vesicle) or can have an onion-like multilayered structure (multilamellar vesicle). The amphiphilic lipids comprise a hydrated head group at the water interface of the bilayer attached to a hydrophobic group that forms the interior of the bilayer by association with the hydrophobic group of lipids from the opposite leaflet of the bilayer. The physical properties of the liposome and its bilayer can vary widely and depend on lipid composition, aqueous composition, and temperature relative to the acyl components' phase transition points. Because of the central aqueous compartment, a simple test for the presence of liposomes in a lipid dispersion is to determine the presence of an entrapped aqueous phase.

A liposome drug product consists of the drug substance, liposome components, and other inactive but critical ingredients such as an aqueous dispersion unless the contents are a lyophilized product.

Unless otherwise justified, the following tests are required for liposomes:

- *Universal Tests*

- *Specific Tests*
  - — ●*Globule Size Distribution in Lipid Injectable Emulsions* 〈729〉● (RB 1-May-2016)

Sterile Powders for Suspensions

Sterile powders for suspensions consist of drug substances and other components as dry-formulation ingredients to ensure the chemical and physical stability of the presentation within a final-use container. Companion sterile diluent or diluent compartments may be provided to facilitate constitution to the desired final volume.

The sterile article for injection may be presented in several forms: lyophilized powder intended for final suspension, powdered solids intended for final suspension, and microparticles that retain their integrity and are delivered as a sterile suspension. The description should include a section that deals with ease of dispersion and reconstitution. The dosage form is a homogeneous solid that is readily constituted to the final form with the specified diluent, and dispersion is completed with gentle agitation.

Unless otherwise justified, the following tests apply to sterile powders for injection:

- *Universal Tests*

●● (RB 1-May-2016)

Microparticles: Some microparticles are provided as a sterile powder to be reconstituted as a suspension before injection. The majority of microparticle preparations are for reconstitution as a suspension for injection. For quality test requirements, please refer to *Implants*.

Emulsions

Emulsions for parenteral dosage forms are liquid preparations of drug substances dissolved or dispersed in a suitable emulsion medium. Oil-in-water or water-in-oil emulsions typically entrap the drug substance.

Emulsions typically are white, turbid, homogeneous liquid dosage forms that contain one or more chemical substances (e.g., drug substances and excipients) dissolved in a solvent (aqueous or nonaqueous) or mixture of mutually miscible solvents. Emulsions intended for intravenous administration must be sterile and must be compatible with the intended administration site.

Unless otherwise justified, the following tests are required for emulsions for injection:

- *Universal Tests*
- *Specific Tests*
  - — ●Chapter 〈729〉● (RB 1-May-2016)

Implants

Implants for extended release consist of a matrix of drug substance and polymeric excipient that may or may not have an outer rate-controlling membrane. The polymeric excipient must be biocompatible but may or may not be bioresorbable. Some implants are made from medical-grade metal with an osmotic pump inside that effects the extended release of the drug substance. Implants must be sterile and usually are formed in the shape of a cylinder, although other shapes are used. Solvents used to dissolve the formulation can lead to sterilization, and thus the internal sterility test method should demonstrate that the sample preparation does not lead to sterilization of the test sample.

Cylindrically shaped implants for systemic delivery usually are provided in an inserter for subcutaneous or local administration such as local ocular delivery. Implants also can be surgically implanted for local delivery, e.g., ocular delivery.

Unless otherwise justified, the following tests are required for implants:

- *Universal Tests*
- *Specific Tests*
  - — *Uniformity of Dosage Units*

●● (RB 1-May-2016)

In situ gels

Sterile in situ gels are liquid preparations that are intended for injection into specific therapeutic targets. Typically they consist of polymers in organic solvents, and upon injection the solvents migrate away from the site, leaving a gelled mass. The preparations may be injected as-is, upon reconstitution, from in situ formation, or from chemically initiated catalysis that results in the final form.

Unless otherwise justified, the following tests are required for in situ gels:
- *Universal Tests*
- *Specific Tests*

●● (RB 1-May-2016)

— *Antimicrobial Preservatives*

●● (RB 1-May-2016)

Microparticles

Injectable, resorbable microparticles for extended release generally range from 20 to 100 μm in diameter. They consist of drug substances embedded within a biocompatible, bioresorbable polymeric excipient, e.g., polyester excipients. Microparticles are provided as a sterile powder in a vial or syringe.

Just before intramuscular or subcutaneous administration, the microparticle powder should be suspended in an aqueous injection vehicle (diluent). The injection vehicle usually consists of water for injection, surfactant, and a viscosity enhancer, and the vehicle may contain a compound that adjusts osmolality, e.g., a sugar with or without a compound that controls pH, e.g., an acid. The injection vehicle must be sterile and must be tested according to requirements for solutions that are intended for parenteral administration.

Unless otherwise justified, the following tests are required for microparticles for injection:
- *Universal Tests*
- *Specific Tests*
  - — *Uniformity of Dosage Units*
  - — *Water Content*

●● (RB 1-May-2016)

Drug-Eluting Stents

Drug-eluting stents are tiny metal or polymer scaffolds used to keep arteries open following a medical intervention; the drug substance is incorporated into or onto the stent platform. Drug-eluting stents typically have two components of testing: (1) functional tests that generally are American Society for Testing and Materials (ASTM) International methods that fall outside the scope of this chapter and (2) analytical tests.

Unless otherwise justified, the following tests are required for drug-eluting stents:
- *Universal Tests*
- *Specific Tests*
  - — *Uniformity of Dosage Units.* The content of the active substance in the dosage form is applicable for drug-eluting stents packaged in single-unit containers. The test can be performed by either content uniformity or weight variation (see ⟨905⟩). With appropriate justification, the number of stents needed for this test may be fewer than the recommended number of stents in ⟨905⟩.
  - — *Biological Reactivity* ●*Tests, In Vivo* ⟨88⟩● (RB 1-May-2016)

Delete the following:

●PRODUCT PERFORMANCE TEST

A performance test for injection and implanted products must have the ability to measure drug release from the manufactured pharmaceutical dosage forms. It must be reproducible and reliable, and although it is not a measure of bioavailability, the performance test must be capable of detecting changes in drug release characteristics from the finished product. These changes have the potential to alter the biological performance of the drug in the dosage form. They may be related to active or inactive/inert ingredients in the formulation, physical or chemical attributes of the finished formulation, manufacturing variables, shipping and storage effects, aging effects, and other formulation factors critical to the quality characteristics of the finished drug product.

Please refer to *The Dissolution Procedure: Development and Validation* ⟨1092⟩ while developing the drug release test, selecting the drug release medium, apparatus or procedure, and analytical method. Product performance tests can serve many useful purposes in product development and in post-approval drug product monitoring. They provide assurance of equivalent performance for products that have undergone post-approval raw material changes, relocation or change in manufacturing site, and other changes as detailed in the FDA SUPAC Guidances for Industry (SUPAC-IR, SUPAC-MR, and SUPAC-SS; available at www.fda.gov/cder/guidance). In this chapter, a USP performance test for injection and implanted products forms to support batch release is to be considered.● (RB 1-May-2016)

⟨2⟩ ORAL DRUG PRODUCTS—PRODUCT QUALITY TESTS

INTRODUCTION

Oral delivery is the most common route of administration for drug products. All oral drug products lead to systemic and/or local action in the oral cavity and/or gastrointestinal tract. Oral drug products fall primarily into two main categories: solids and liquids. Solid oral drug products include but are not restricted to capsules, tablets, granules, and powders. Similarly, liquid oral drug products include but are not restricted to solutions, suspensions, and emulsions. The definitions and descriptions of these dosage forms and brief information about their composition and manufacturing process are found in *Pharmaceutical Dosage Forms* ⟨1151⟩. [NOTE—All references to chapters above ⟨1000⟩ are for informational purposes only, for use as a helpful resource. These chapters are not mandatory unless explicitly called out for application.]

This chapter focuses on the product quality tests that are generally necessary for oral drug products for a single or combination of small molecules of active ingredients. Biologics in solid dosage forms are not considered. In this chapter, the terms "drug substance" and "active ingredient" are used interchangeably. The contents of this chapter do not necessarily apply to drug products that are intended for use other than by oral administration. For example, the chapter does not address oromucosal dosage forms. Some of the tests indicated in this chapter may be performed on an in-process basis or omitted as routine tests based on process validation. However, the product must meet USP compendial requirements when sampled and tested, once the product is on the market.

This chapter provides lists of consolidated common product quality test requirements in a concise and coherent fashion. This chapter applies, in part or whole, when referenced in a drug product monograph (see *General Notices, 3.10 Applicability of Standards*). This chapter includes the quality tests for the specific route of administration. The quality tests listed can be used as appropriate by manufacturers toward the development of new drug product monographs for submission to USP. If a validated performance test procedure is available for the specific drug product, it is identified in a general chapter below ⟨1000⟩. In cases where a validated procedure cannot be recommended, but if the information is available for a product quality and/or product performance test, it is described in an informational chapter above ⟨1000⟩.

Drug Product Quality Tests and Performance Tests

Monograph tests, analytical procedures, and acceptance criteria for testing oral drug products are divided into two categories: 1) those that assess general product quality attributes, and 2) those that assess product performance, which is a specific quality attribute typically linked to bioavailability and bioequivalence studies (see *Assessment of Drug Product Performance—Bioavailability, Bioequivalence, and Dissolution* ⟨1090⟩). Drug product quality tests are intended to assess attributes such as identification, strength (assay), impurities (universal tests), dose content uniformity, pH, minimum fill, alcohol content, volatile content, and microbial content (specific tests). Drug product performance tests are designed to assess in vitro drug release from dosage forms (e.g., *Dissolution* ⟨711⟩ and *Drug Release* ⟨724⟩). For liquid oral drug products in solution, performance is considered optimal, and a monograph performance test is not included.

Each of these attributes is important for a primary understanding of the quality and performance of a drug product. Thus, they form the basis for the monograph. A compendial product should meet all drug product quality tests and drug product performance tests contained in its monograph.

[NOTE—Dissolution tests, specifically dissolution profile similarity between higher strengths and lower strengths of a given manufacturer's product and dissolution profile similarity between the generic product and the reference product, are used for granting biowaivers. See ⟨1090⟩.]

PRODUCT QUALITY TESTS FOR ORAL DRUG PRODUCTS

Drug product quality tests for oral drug products fall into two categories: 1) universal tests that are applicable to all oral drug products and should be included in the monograph, and 2) specific tests that should be considered for inclusion for specific types of oral products.

Universal Tests for Oral Drug Products

Product quality attributes for oral dosage forms are important to ensure that commercialized products meet minimum quality requirements. Universal tests should be applied to all oral dosage forms and include *Description, Identification, Strength* (*Assay* test), and *Impurities* (organic, inorganic, and residual solvents).

DESCRIPTION

Description is general in nature and is not a standard in itself. It communicates the appearance of an article that complies with monograph standards.

IDENTIFICATION

The identification test is defined in *General Notices, 5.40 Identity*. It is included in a monograph as an aid to confirm that the article contains the labeled drug substance by providing a positive identification of the drug substance or substances in a drug product.

One method of confirming the identity is to compare the retention time of the sample with that obtained for the standard injections in a chromatographic assay procedure. Other methods often used to orthogonally confirm the identity of the active ingredient are: *Thin-Layer Chromatographic Identification Test* ⟨201⟩, *Spectrophotometric Identification Tests* ⟨197⟩, *Nuclear Magnetic Resonance Spectroscopy* ⟨761⟩, *Near-Infrared Spectroscopy* ⟨1119⟩, and *Raman Spectroscopy* ⟨1120⟩, among others. The analytical procedure must be able to distinguish the active ingredient from all excipients that are present or from potential degradation products likely to be present. Care must also be taken to ensure that the chromatographic system separates the article from other closely related drug substances, impurities, and additives. Infrared and ultraviolet absorption also can be used for identification (see ⟨197⟩), if the procedure has been demonstrated to be selective for the drug substance via an appropriate validation or verification study. The results of the identification test must be compared to the results obtained from a similarly prepared, suitable Reference Standard.

ASSAY

The assay is a specific and stability-indicating test to determine the potency (content) of the drug product. When a nonspecific assay (e.g., titration) is justified, other supporting analytical procedures should ensure that any interfering species can be detected. In general the *a priori* acceptance of ±10% variation in limits of a quality attribute (e.g., assay) from the target label claim (100%) in most cases is intended to account for manufacturing variability and shelf-life stability and is primarily based on the notion that such variation in a quality attribute is less likely to have any noticeable adverse impact on the desired clinical outcome. Acceptance criteria of 95.0%–105.0% are used with justification (e.g., for drug products with narrow therapeutic index). Activity assays and absolute content assays also are acceptable when justified.

IMPURITIES

Process impurities, synthetic by-products, and other inorganic and organic impurities may be present in the drug substance and in the excipients used in the manufacture of the drug product. These impurities are limited by drug substance and excipient monographs. During product manufacture and over the shelf life of the product, degradation products can form. These can be a result of degradation of the drug substance or from interactions between the drug substance and excipient(s), among other factors. The procedures and acceptance criteria should specifically limit toxic materials. See specific requirements in the *General Notices 5.60, Impurities and Foreign Substances*. [NOTE—For additional information, see *Impurities in Drug Substances and Drug Products* ⟨1086⟩.]

Specific Tests for Tablets

In addition to the *Universal Tests for Oral Drug Products* described above, the following specific tests for tablets should be considered, depending upon the nature of the drug substance and formulation.

VOLATILE CONTENT

The test and the specific method depend on the nature of the article. Special consideration should be given to dosage forms for which water content has been shown to be a potential quality attribute and to products where solvent is used in the manufacture of the drug product.

When the presence of moisture or other volatile material may become critical, analysts must determine the amount of unbound volatile solvents or volatile matter of any kind that is driven off by *Loss on Drying* ⟨731⟩ or another suitable technique (e.g., water activity). For substances that appear to contain water as the only volatile constituent, the procedure given in *Water Determination* ⟨921⟩ may be appropriate. For drug products, analysts also should consult *Residual Solvents* ⟨467⟩.

DISINTEGRATION

Disintegration is an essential attribute of oral solids, except for those intended to be chewed before being swallowed and for delayed- or extended-release products. This test measures the time it takes for the dosage unit to disintegrate in an aqueous medium and is described in detail in *Disintegration* ⟨701⟩. For certain dosage forms (e.g., effervescent tablets, disintegrating tablets, and others) the *European Pharmacopoeia* describes the disintegration test in great detail. The disintegration test for some of the dosage forms in this chapter is included for completeness. For detailed procedures, please refer to ⟨701⟩ or the *European Pharmacopoeia*. The disintegration test, if included, is used only as a quality control test and not as a product performance test and should conform with the specifications in the monograph. Only when disintegration has been correlated

with dissolution of a dosage form can a disintegration test be used as a product performance test (ICH Guidance Q6A, available at www.ich.org). In all other instances, a dissolution test should be considered as a product performance test.

TABLET FRIABILITY

The test procedure is applicable to most compressed, uncoated tablets. Friability determines the ability of tablets to withstand mechanical stresses and their resistance to chipping and surface abrasion. [NOTE—For additional information, see *Tablet Friability* ⟨1216⟩.]

TABLET BREAKING FORCE

Tablet breaking force measures the mechanical integrity of tablets, which is the force required to cause them to fail (i.e., break) in a specific plane. [NOTE—For additional information, see *Tablet Breaking Force* ⟨1217⟩.]

UNIFORMITY OF DOSAGE UNITS

Uniformity of dosage units must be demonstrated by either content uniformity or weight variation. Content uniformity is based on the assay of the individual content of drug substance(s) in a number of dosage units to determine whether the individual contents are sufficiently close to label claim. Weight variation can be used as an alternative to estimate content uniformity under certain conditions (see *Uniformity of Dosage Units* ⟨905⟩).

Specific Tests for Uncoated Tablets

Uncoated tablets include single-layer tablets that result from a single compression of particles and multilayer tablets that consist of concentric or parallel layers obtained by successive compression of particles of different composition. The excipients used generally are not specifically intended to modify the release of the active substance in the digestive fluids. Uncoated tablets include but are not limited to: effervescent tablets, buccal tablets, sublingual tablets, chewable tablets, disintegrating tablets, orally disintegrating tablets, tablets for oral solution, and tablets for oral suspension. For uncoated tablets, disintegration should be tested as directed in ⟨701⟩.

BUCCAL, SUBLINGUAL, AND ORALLY DISINTEGRATING TABLETS

These dosage forms are discussed in *Mucosal Drug Products—Product Quality Tests* ⟨4⟩. They are listed here for informational purposes and completeness.

CHEWABLE TABLETS

Chewable tablets are not required to comply with the disintegration test. Chewable tablets (intact) should undergo dissolution testing, as a product performance test (if cited in the monograph), because they might be swallowed without proper chewing by a patient. In general, the dissolution test conditions for chewable tablets should be the same as for nonchewable tablets of the same active ingredient or moiety.

TABLETS FOR ORAL SOLUTION AND TABLETS FOR ORAL SUSPENSION

These are tablets intended to be dissolved or dispersed in water before administration, giving a homogeneous solution or dispersion. They are listed here for informational purposes and completeness.

Specific Tests for Coated Tablets

Coated tablets are tablets covered with one or more layers of mixtures of various substances such as natural or synthetic resins, gums, gelatin, inactive and insoluble excipients, sugars, plasticizers, polyols, waxes, coloring matter authorized by the competent authority, and sometimes flavoring substances and active substances. Tablets coated by sugar or film include but are not limited to: plain coated tablets, extended-release tablets, and delayed-release tablets. A disintegration test, when applicable, should be performed as directed in ⟨701⟩.

There are no additional specific quality tests for extended-release tablets and delayed-release tablets. Universal quality tests should be applied to these products.

Specific Tests for Capsules

In addition to the *Universal Tests for Oral Drug Products* described above, the specific tests included below should be considered, depending on the nature of the drug substance and formulation.

Product quality tests that are considered specific to the type of capsule include those for volatile content (⟨731⟩ and ⟨921⟩). One-piece capsules typically are used to deliver a drug substance as a solution or suspension. Two-piece capsules consist of two telescoping cap-and-body pieces that are used to deliver solid material as powder, granules, or small tablets. Modified-release capsules include but are not limited to: delayed-release capsules and extended-release capsules.

Disintegration: Proceed as directed in *Disintegration* ⟨701⟩, *Soft Gelatin Capsules* for one-piece capsules and *Disintegration* ⟨701⟩, *Hard Gelatin Capsules* for two-piece capsules. Disintegration for modified-release capsules is described in great detail in the *European Pharmacopoeia*.

There are no additional specific quality tests for extended-release capsules and delayed-release capsules. Universal quality tests should be applied to these products.

Specific Tests for Granules

In addition to the *Universal Tests for Oral Drug Products* described above, the specific tests included below should be considered, depending on the nature of the drug substance and formulation.

Granules are solid dosage forms that are composed of agglomerations of smaller particles. Granules include but are not limited to: effervescent granules, coated granules, extended-release granules, and delayed-release granules.

Tests that are considered specific to the type of granules include volatile content (⟨731⟩ and ⟨921⟩). Disintegration for effervescent granules is described in great detail in the *European Pharmacopoeia*. On the basis of the nature of the article and scientific criteria, additional tests may apply, including powder fineness and others.

Specific Tests for Powders

Oral powders should indicate: "For Oral Use Only". Tests that are considered specific to the type of powders include: *Minimum Fill* ⟨755⟩ and volatile content (⟨731⟩ and ⟨921⟩). Chapter ⟨755⟩ has specifications that apply to oral powders.

On the basis of the nature of the article and scientific criteria, additional tests may apply, including pH in an aqueous solution, powder fineness, microbial limits, and others.

Specific Tests for Liquids

The recommended product quality tests for a liquid drug product include the *Universal Tests for Oral Drug Products* described above and the specific tests included below. Most of the quality tests for liquids require the evaluation of single-dose products to estimate the quality attribute. Specific directions to perform the quality tests for either single-dose or multiple-dose products are provided in the monograph or the general chapter. For example, weight variation may be used when adequacy of mix for the active substance(s) and excipients in the blend is well controlled to ensure their uniform distribution, as in solutions.

DELIVERABLE VOLUME

When the liquid formulation is packaged in a multiple-dose container, compliance with *Deliverable Volume* ⟨698⟩ is required.

ALCOHOL DETERMINATION

If the liquid formulation contains a quantity of alcohol, *Alcohol Determination* ⟨611⟩ should be included. The limits may be an absolute concentration, in percentage, or relative to a labeled content.

PH

Liquid oral products typically are aqueous formulations that are susceptible to pH changes from exposure to atmospheric CO_2. The uptake of atmospheric CO_2 and consequent pH change of oral liquid products is only relevant to aqueous-based products. The pH of an oral liquid formulation can affect flavor and stability. The pH range as outlined in *pH* ⟨791⟩ is indicated in the monograph.

MICROBIAL CONTENT

The presence of certain microorganisms in nonsterile preparations may have the potential to reduce or even inactivate the therapeutic activity of the product and has a potential to adversely affect the health of the patient. Some liquid oral products

can be subject to extreme microbiological control, and others require none. The needed microbial specification for a given liquid oral product depends on its formulation and use and is indicated in the monograph.

[NOTE—For additional information, see *Microbiological Examination of Nonsterile Products: Acceptance Criteria for Pharmaceutical Preparations and Substances for Pharmaceutical Use* ⟨1111⟩.]

ANTIOXIDANT

Release testing should be performed. Shelf-life testing may be unnecessary where justified by development and stability data (ICH Guidance Q6A).

EXTRACTABLES

Where development and stability data show no significant evidence of extractables, elimination of this test may be proposed. Where data demonstrate the need and acceptance criteria for oral solutions—rubber stopper, cap liner, plastic bottle—data should be collected as early in the development process as possible (ICH Guidance Q6A).

Types of Liquid Dosage Forms

Specific quality tests for these dosage forms are provided in their respective monographs.

SOLUTIONS, POWDERS, AND GRANULES FOR SOLUTION

Tests of "for Solution" formulations are conducted on a well-mixed solution of the drug product constituted as described in the labeling.

EMULSIONS, SUSPENSIONS, AND POWDERS AND GRANULES FOR SUSPENSION

Tests of "for Suspension" formulations are conducted on a well-mixed suspension of the drug product constituted as described in the labeling. Product quality tests for suspensions should include a test of suspendability.

POWDERS AND GRANULES FOR SOLUTIONS

After dissolution or suspension, they comply with monograph requirements for the final dosage form. Volatile content (⟨731⟩ and ⟨921⟩) may be an additional quality test for powders and granules for reconstitution.

Specific Tests for Miscellaneous Oral Dosage Forms

LYOPHILIZED ORAL PRODUCTS

Water Determination ⟨921⟩, *Method Ia*: Lyophilized oral products comply with the test. The limits are approved as indicated in the specific monograph.

⟨3⟩ TOPICAL AND TRANSDERMAL DRUG PRODUCTS—PRODUCT QUALITY TESTS

INTRODUCTION

Topically applied drug products fall into two general categories: those applied to achieve local action and those applied to achieve systemic effects after absorption through the skin into the blood circulation. Local action can occur at or on the surface of the application site (e.g., stratum corneum); in the underlying tissues (e.g., epidermis and/or dermis); and in subcutaneous tissues (e.g., muscle or joint). Topically applied drug products include, but are not limited to, creams, gels, ointments, pastes, suspensions, lotions, foams, sprays, aerosols, solutions, and transdermal delivery systems (TDS). The definitions and descriptions of these dosage forms, as well as brief information on their composition and/or manufacturing processes, can be found in *Pharmaceutical Dosage Forms* ⟨1151⟩.

Procedures and acceptable criteria for testing topically applied drug products can be divided into those that assess general product quality attributes and those that assess product performance. The product quality attributes include the following: de-

scription, identification, assay (strength), impurities, physicochemical properties, uniformity of dosage units, water content, pH, apparent viscosity, microbial limits, antimicrobial preservative content, antioxidant content, sterility (if applicable), and other tests that may be product specific. Product performance testing assesses drug release and other attributes that affect drug release from the finished dosage form.

This chapter provides lists of consolidated common product quality test requirements in a concise and coherent fashion. This chapter applies, in whole or in part, when referenced in a drug product monograph (see *General Notices, 3.10 Applicability of Standards*) and includes the quality tests for the specific route of administration. The quality tests listed can be used as appropriate by manufacturers toward the development of new drug product monographs for submission to *USP–NF*.

TDS release their active ingredients by different mechanisms. They can be passive or active. This chapter covers only the tests related to passive TDS.

Change to read:

PRODUCT QUALITY TESTS FOR TOPICAL AND TRANSDERMAL DRUG PRODUCTS

Universal Tests

Universal tests (see *ICH Guidance Q6A—Specifications: Test Procedures and Acceptance Criteria for New Drug Substances and New Drug Products: Chemical Substances*, available at www.ich.org) are listed as follows and are applicable to all topically applied drug products.

DESCRIPTION

A qualitative description of the drug product should be provided. The acceptance criteria should include the final acceptable appearance of the finished dosage form and packaging. A visual examination should identify changes in color, adhesive migration (i.e., cold flow; see *Cold Flow Test*) for TDS, separations, crystallization, and others that are specific to the drug product. The description should specify the content or the label claim of the article. For TDS, a visual examination should also be done to assess potential use issues with the product. The examination should include an assessment of the difficulty of removing the TDS from the pouch (e.g., due to adhesive migration adhering the system to the pouch); inability to remove the TDS from the pouch without damage to the system; and adhesive residue remaining on the pouch after removal of the TDS. This is not a compendial test but is part of the manufacturer's specification for the drug product.

IDENTIFICATION

Identification tests are discussed in *General Notices, 5.40 Identity*. Identification tests should establish the identity of the drug or drugs present in the article and should discriminate between compounds of closely related structures that are likely to be present. Identification tests should be specific for the drug substance(s) (e.g., infrared spectroscopy). Near-infrared (NIR) or Raman spectrophotometric methods also could be acceptable for the identification of the drug product (for additional information, see *Near-Infrared Spectroscopy* ⟨1119⟩ and *Raman Spectroscopy* ⟨1120⟩). Identification solely by a single chromatographic retention time is not specific.

ASSAY

A specific and stability-indicating test should be used to determine the strength (content) of the drug product. This assay requirement can be satisfied for topical products containing antibiotics by a standard microbiological method (see *Antibiotics—Microbial Assays* ⟨81⟩). In cases when the use of a nonspecific assay (e.g., *Titrimetry* ⟨541⟩) is justified, other supporting analytical procedures should be used to achieve overall specificity.

IMPURITIES

Process impurities, synthetic byproducts, impurities associated with the adhesive (e.g., residual monomers), residual solvents (see *Residual Solvents* ⟨467⟩), ●● (Official 1-Jan-2018) and other inorganic and organic impurities may be present in the drug substance and in the excipients used in the manufacture of the drug product and should be assessed and controlled. Impurities arising from the degradation of the drug substance and those arising during the manufacturing process of the drug product also should be assessed and controlled.

Specific Tests

In addition to the *Universal Tests* listed previously, the following *Specific Tests* should be considered on a case-by-case basis:

UNIFORMITY OF DOSAGE UNITS

This test is applicable for TDS and for topical dosage forms intended for systemic delivery, or where tight control of the dose is necessary to limit local irritation or undesired systemic exposure, packaged in single-unit containers, such as packets (see *Uniformity of Dosage Units* ⟨905⟩). The uniformity of dosage units specification is not intended to apply to solutions, suspensions, emulsions, ointments, or gels in single-unit containers intended for local action following external, cutaneous administration.

WATER CONTENT

A test for water content should be included when appropriate (see *Water Determination* ⟨921⟩). This test is generally formulation dependent. Therefore, it is not included in the compendial drug product monograph but is part of the manufacturer's specification for the drug product.

MICROBIAL LIMITS

Microbial examination of nonsterile drug products is performed according to the methods given in *Microbial Enumeration Tests* ⟨61⟩ and *Tests for Specified Microorganisms* ⟨62⟩, unless the formulation itself is demonstrated to have antimicrobial properties. Acceptance criteria for nonsterile pharmaceutical products based on total aerobic microbial count and total combined yeasts and molds count are given in *Microbiological Examination of Nonsterile Products: Acceptance Criteria for Pharmaceutical Preparations and Substances for Pharmaceutical Use* ⟨1111⟩.

ANTIMICROBIAL PRESERVATIVE CONTENT

Acceptance criteria for antimicrobial preservative content in multi-unit products should be established. They should be based on the levels of antimicrobial preservative necessary to maintain the product's microbiological quality at all stages throughout its proposed usage and shelf life (see *Antimicrobial Effectiveness Testing* ⟨51⟩).

ANTIOXIDANT CONTENT

If antioxidants are present in the drug product, tests of their content should be established unless oxidative degradation can be detected by another test method such as impurity testing. Acceptance criteria for antioxidant content should be established. They should be based on the levels of antioxidant necessary to maintain the product's stability at all stages throughout the product's proposed usage and shelf life.

STERILITY

Depending on the use of the dosage form (e.g., products that will be applied to open wounds or burned areas), sterility of the product should be demonstrated as appropriate (see *Sterility Tests* ⟨71⟩).

PH

When applicable, topically applied drug products should be tested for pH. Because some topically applied drug products contain very limited quantities of water or aqueous phase, pH measurements may not always be warranted. This test is generally formulation dependent. Therefore, it is not included in the compendial drug product monograph but is part of the manufacturer's specification for the drug product.

PARTICLE SIZE

When the finished product contains a suspended solid drug substance, the product should be examined for particle size. The particle size of the active drug substance(s) in topically applied drug products is usually established and controlled at the formulation development stage. However, topically applied drug products should be examined for evidence of particle alteration (i.e., drug polymorphic form, appearance of particles, size, shape, morphology, agglomeration, or aggregation) of the drug substance that may occur during the course of product processing and storage. These types of tests are generally formulation dependent. Therefore, such tests are not included in compendial monographs but are part of the manufacturer's specification for the drug product.

CRYSTAL FORMATION

When the drug substance is dissolved in the finished product, the product should be microscopically examined for evidence of crystal formation of the active drug substance. This test is generally formulation dependent. Therefore, it is not included in the compendial drug product monograph but is part of the manufacturer's specification for the drug product. It is recommended that the potential for the drug product to form crystals of drug substance be examined during product development using conditions of stress.

SPECIFIC TESTS FOR OPHTHALMIC DRUG PRODUCTS

See *Ophthalmic Products—Quality Tests* ⟨771⟩.

SPECIFIC TESTS FOR TOPICALLY APPLIED SEMISOLID DRUG PRODUCTS

Minimum Fill

Single- and multiple-unit containers must meet minimum fill requirements as established by testing described in *Minimum Fill* ⟨755⟩. For single-unit containers where the test for ⟨905⟩ is applied, the test for ⟨755⟩ is not required.

Apparent Viscosity

Viscosity is a measure of a formulation's resistance to flow and is an assessment of a rheological property of a semisolid dosage form. The term "apparent viscosity" applies to non-Newtonian fluids, which comprise the majority of semisolid pharmaceutical dosage forms.

Measurement procedures should be developed as outlined in *Viscosity—Capillary Methods* ⟨911⟩, *Viscosity—Rotational Methods* ⟨912⟩, and *Viscosity—Rolling Ball Method* ⟨913⟩. For semisolids that show thixotropy and/or irreversible changes in viscosity after shearing, specific attention should be given to sample preparation procedures to minimize variability in the measurement of apparent viscosity caused by variable shear histories (e.g., mixing speed and temperature, filling operation, and sample handling). Furthermore, for some products it may be warranted to have apparent viscosity specifications at more than one stage of the manufacturing process or with more than one set of test conditions (e.g., bulk in-process stage, final packaged product, high and low shear rates, and different temperatures).

Apart from single-point viscosity measurements, more advanced rheological techniques (flow, oscillatory, creep, and stress relaxation testing) can be applied to develop a mechanistic understanding of a formulation and its structure. These techniques may be useful for product development using the principles of quality by design or for comparative physicochemical characterization of the test and reference formulations in the case of a biowaiver argument in a generic drug application. However, these techniques are not generally suitable for routine quality testing. Common parameters derived from rheological testing of semisolid pharmaceutical dosage forms that may be useful for characterization and comparison are the storage modulus, loss modulus, relaxation modulus, compliance, thixotropic index, and yield stress.

Acceptance criteria are product specific and defined to ensure that the apparent viscosity of each batch of semisolid drug product is within the range defined by the product design and is consistent between batches based on the product development specifications and statistical assessment of multiple product batches over the product's shelf life.

Uniformity in Containers

Topically applied semisolid drug products may show physical separation during manufacturing processes and during their shelf life. To ensure the integrity of the drug product, it is essential to evaluate the uniformity of the finished product. This test applies only to multiple-unit containers, such as tubes and jars. This test does not apply to more fluid topical drug products in multiple-unit containers, such as emulsions, lotions, two-phase gels, or topical suspensions, in which the labeling directs the user to mix the product (e.g., shake well) before use.

PRODUCTS PACKAGED IN TUBES

Visual uniformity: Carefully remove or cut off the bottom tube seal and make a vertical cut from the bottom to the top of the tube. Carefully cut the tube around the upper rim, open the two flaps, and lay the flaps open to expose the product.

Inspect the product visually for the presence of phase separation, change in physical appearance and texture (e.g., color change, crystallization, lumping), and other properties described in the product specification for *Description.* If there is no significant phase separation or change in physical appearance and texture, and if the product meets the *Description* criteria, the product passes the test. If the product exhibits significant phase separation or change in physical appearance or texture, the product fails the test.

Uniformity of active ingredient(s): The following procedures can be modified depending on the sensitivity of the quantitative procedure used to determine the amount of the drug substance(s) present in the formulation.

For multiple-unit tubes that contain 5 g or more of product

STAGE 1:

1. Using a single tube, after performing the test for *Visual Uniformity*, remove an appropriate amount of the product from the top (i.e., cap end), middle, and bottom (i.e., seal end) portions of the tube. The sample size should be sufficient for at least one quantitative determination of the active ingredient(s) and should not exceed the maximum dose recommended by the product labeling for a single application.
2. Determine the amount of the active ingredient(s) in each portion of the product using any appropriate validated quantitative procedure, and evaluate the test results from the single tube using the *Stage 1* acceptance criteria outlined in number *3*.
3. *Stage 1* acceptance criteria are met if:
   - None of the three results are outside of the product assay range, and
   - The maximum difference in the amount of active ingredient(s) determined within the tube is NMT 10.0%. For example, if the three measurements within the tube are 97.0%, 95.2%, and 99.7%, the maximum difference would be 4.5% (i.e., 99.7% – 95.2% = 4.5%).
4. Proceed to *Stage 2* testing if *Stage 1* acceptance criteria are not met and none of the test results are outside the product assay range by more than 5.0% (e.g., if the product assay range is 90.0%–120%, the range will be 85.0%–125.0%), and the maximum difference in the amount of active ingredient(s) measured within the tube is NMT 10.0%. For example, if the highest and lowest assay values were 106.0% and 94.7% of label claim, then the difference would be 106.0 – 94.7 = 11.7%.
5. Proceed to *Stage 3* testing if *Stage 1* acceptance criteria are not met, *Stage 2* acceptance criteria cannot be met, NMT one of the three test results is outside of the product assay range by more than ±5.0%, none of the results are outside the product assay range by more than ±15.0%, and the maximum difference of the amount of active ingredient(s) measured within the tube is NMT 15.0%.

STAGE 2:

1. Test an additional two tubes for *Visual Uniformity* and *Uniformity of Active Ingredient(s)* for a total of three samples each from three tubes.
2. Determine the amount of the active ingredient(s) in each portion of the product using any appropriate validated quantitative procedure, and evaluate the test results from the three tubes using the *Stage 2* acceptance criteria.
3. *Stage 2* acceptance criteria are met if:
   - The *Visual Uniformity* test is met for all tubes;
   - None of the nine results (i.e., three each from three tubes) are outside of the product assay range by NMT 5.0%, and
   - The maximum difference of the amount of active ingredient(s) measured within each tube, for each of the samples tested, is NMT 10.0%.
4. Proceed to *Stage 3* testing if NMT one of the nine test results is outside of the product assay range by ±5.0%, none are outside the product assay range by ±15.0%, and the maximum difference of the amount of active ingredient(s) measured within each tube is NMT 15.0%.

STAGE 3:

1. If *Stage 2* has been completed, test an additional seven tubes for *Visual Uniformity* and *Uniformity of Active Ingredient(s)* for a total of three samples each from 10 tubes. If *Stage 2* was skipped, test an additional nine tubes for *Visual Uniformity* and *Uniformity of Active Ingredient(s)* for a total of three samples each from 10 tubes.
2. Determine the amount of active ingredient(s) in each portion of the product using any appropriate validated quantitative procedure, and evaluate the test results from the 10 tubes using the *Stage 3* acceptance criteria as outlined in number *3*.
3. *Stage 3* acceptance criteria are met if:
   - The *Visual Uniformity* test is met for all tubes; and
   - 29 of the 30 test results are within the product assay range by ±5.0%, and none are outside of the product assay range by ±15.0%; and
   - The maximum difference of the amount of active ingredient(s) measured within each tube, for each of the 10 tubes tested, is NMT 15.0%.

For multiple-unit tubes that contain less than 5 g of product

STAGE 1:

1. Using a single tube, after performing the test for *Visual Uniformity*, remove an appropriate amount of product from the top (i.e., cap end) and bottom (i.e., seal end) portions of the tube. The sample size should be sufficient for at least one quantitative determination of the active ingredient(s) and should not exceed the maximum dose recommended by the product labeling for a single application.
2. Determine the amount of the active ingredient(s) in each portion of the product using any appropriate validated quantitative procedure, and evaluate the test results from the tube using the *Stage 1* acceptance criteria outlined in number *3*.
3. *Stage 1* acceptance criteria are met if:
   - Neither result is outside of the product assay range; and

- The difference between the amount of active ingredient(s) determined for the two samples within the tube tested is NMT 10.0%. For example, if the two measurements within a tube were 95.2% and 89.7%, the difference would be 5.5%.

4. Proceed to *Stage 2* testing if *Stage 1* acceptance criteria are not met and neither of the test results are outside the product assay range by more than ±5.0% (e.g., if the product assay range is 90.0%–120.0%, the range will be 85.0%–125.0%), and the difference between the amounts of active ingredient(s) measured within the tube is NMT 10.0%.
5. Proceed to *Stage 3* testing if *Stage 1* acceptance criteria are not met, *Stage 2* acceptance criteria cannot be met, NMT one of the test results is outside of the product assay range by more than ±5.0%, and none of the results are outside the product assay range by more than ±15.0%, and the difference between the amounts of active ingredient(s) measured within the tube is NMT 15.0%.

STAGE 2:

1. Test an additional two tubes for *Visual Uniformity* and *Uniformity of Active Ingredient(s)* for a total of two samples each from three tubes.
2. Determine the amount of the active ingredient(s) in each portion of the product using any appropriate validated quantitative procedure, and evaluate the test results from the three tubes using the *Stage 2* acceptance criteria as outlined in number *3*.
3. *Stage 2* acceptance criteria are met if:
   - The *Visual Uniformity* test is met for all tubes; and
   - None of the six test results (i.e., two each from three tubes) are outside of the product assay range by ±5.0%; and
   - The difference between the amount of active ingredient(s) determined for the two samples within each tube, for each of the three tubes tested is NMT 10.0%.
4. Proceed to *Stage 3* testing if NMT one of the six test results is outside of the product assay range by ±5.0%, none are outside of the product assay range by ±15.0%, and the difference between the amounts of active ingredient(s) measured within each tube is NMT 15.0%.

STAGE 3:

1. If *Stage 2* has been completed, test an additional seven tubes for *Visual Uniformity* and *Uniformity of Active Ingredient(s)* for a total of two samples each from 10 tubes. If *Stage 2* was skipped, test an additional nine tubes for *Visual Uniformity* and *Uniformity of Active Ingredient(s)* for a total of two samples each from 10 tubes.
2. Determine the amount of active ingredient(s) in each portion of the product using any appropriate validated quantitative procedure, and evaluate the test results from the 10 tubes using the *Stage 3* acceptance criteria as outlined in number *3*.
3. *Stage 3* acceptance criteria are met if:
   - The *Visual Uniformity* test is met for all tubes; and
   - 19 of 20 test results are within ±5.0% of the product assay range, and none are outside of the product assay range by ±15.0%; and
   - The difference between the amount of active ingredient(s) determined for the two samples within each tube, for each of the 10 tubes tested, is NMT 15.0%.

PRODUCTS PACKAGED IN CONTAINERS OTHER THAN TUBES

For semisolid products packaged in a container other than a tube when the sampling method presented previously cannot be used, other sampling methods are acceptable, such as this method described for a jar:

1. Select a suitable syringe of sufficient length to extend to the bottom of the container.
2. Remove and set aside the syringe plunger, and cut off the bottom of the syringe barrel. Sampling should take place from a location to the left or right of the mid-line of the jar surface to preserve an undisturbed region on the other side for any additional investigation (see *Figure 1*).

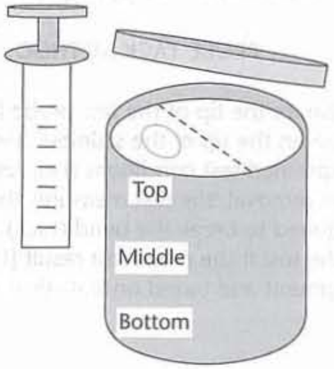

Figure 1. Sampling from a jar container.

3. Slowly push the syringe barrel into the container until it reaches the bottom. Then twist the syringe barrel containing the sample core, and remove the syringe from the container.

4. Insert the syringe plunger into the barrel, and carefully extrude the sample core onto a clean surface in three equal portions to represent the top, middle, and bottom portions of the container.
5. Remove an appropriate sample representative of the top, middle, and bottom portions of the container samples, and test according to the instructions outlined in *Products Packaged in Tubes*.

SPECIFIC TESTS FOR TDS

TDS are formulated with an adhesive layer to ensure intimate contact with the skin and allow the delivery of the desired dose of the drug. Adhesives in TDS must permit easy removal of the release liner before use, adhere properly to human skin upon application, maintain adhesion to the skin during the prescribed period of use, and permit easy removal of the TDS at the end of use without leaving a residue or causing damage to the skin or other undesirable effect(s). Additionally, adhesives must be able to maintain the performance of the TDS throughout the shelf life of the drug product.

Testing of the physical properties of the TDS generally include peel adhesion, release liner peel, tack, cold flow, shear, and crystal formation (see *Crystal Formation*). The peel adhesion, release liner peel, and tack tests measure the adhesion properties of the TDS. Each of these tests measures the force required to separate the TDS from another surface. The cold flow and shear tests measure the cohesive properties of the TDS. These latter tests measure the resistance to flow of the adhesive matrix.

Acceptance criteria are product specific and defined to ensure that adhesion of each batch of TDS is within the range defined by the product design and is consistent between batches based on the product development specifications and statistical assessment of multiple product batches over the product's shelf life.

In addition to physical testing, this section also discusses the *Leak Test* applicable to form-fill-seal–type (reservoir or pouched) TDS.

Peel Adhesion Test

This test measures the force required to remove (peel away) a TDS attached to a standard substrate surface (e.g., polished stainless steel). The TDS is applied to the substrate using specified techniques for application and is conditioned at a specified temperature and time. Then the TDS is peeled away from the substrate with an instrument that allows for control of the peel angle (e.g., 90° or 180°) and peel rate (e.g., 300 mm/min), and the peel force is recorded. This procedure is repeated using a minimum of five independent samples. The product fails the test if the mean peel force is outside the acceptable range determined during product development and based on statistical assessment of multiple product batches over the product's shelf life.

Release Liner Peel Test

This test measures the force required to separate the release liner from the adhesive layer of the TDS. The test is performed with a finished product sample. The test sample is conditioned using specific procedures (temperature and time). Then, the release liner is pulled away from the TDS with an instrument that allows for control of the peel angle (e.g., 90° or 180°) and peel rate (300 mm/min), and the peel force is recorded. This procedure is repeated using a minimum of five independent samples. The product fails the test if the mean peel force is outside the acceptable range determined during product development and based on statistical assessment of multiple product batches over the product's shelf life.

Tack Test

Several methods of tack tests have been developed. Examples include the *Probe Tack Method* and the *Rolling Ball Method*. It is up to the TDS manufacturer to decide which tack test is most appropriate for each drug product.

PROBE TACK METHOD

This test measures the force required to separate the tip of the test probe from the adhesive layer of the TDS. This test uses an instrument designed to create a bond between the tip of the stainless steel test probe (of defined geometry) and the TDS using a controlled force (light pressure) and specified test conditions (i.e., rate, contact time, contact pressure, and temperature). Then while controlling the rate of probe removal, the test measures the profile of force required to separate the probe tip from the TDS and the maximum force required to break the bond (tack). This procedure is repeated using a minimum of five independent samples. The product fails the test if the mean test result [force profile(s) and/or tack] is outside the acceptable range determined during product development and based on statistical assessment of multiple product batches over the product's shelf life.

ROLLING BALL METHOD

This test measures the distance traveled by a defined ball, on the adhesive layer of the TDS under defined conditions, as a parameter dependent on the tack properties of the adhesive layer. This test uses a setup designed to roll a ball (of defined material, weight, size, and surface) from a ramp (of defined angle and length) onto the adhesive layer (with defined orientation) under specified test conditions (e.g., temperature; see *ASTM D3121* for more details). The distance traveled by the ball on the adhesive layer is measured using a suitable measuring device. This procedure is repeated using a minimum of five independent samples. The product fails the test if the mean distance traveled is outside the acceptable range determined during product development and based on statistical assessment of multiple product batches over the product's shelf life.

Cold Flow Test

Cold flow is the migration of the adhesive matrix beyond the edge of the TDS backing, and through the slit in the release liner, which may occur during the course of product processing and storage. Cold flow is an inherent property of TDS due to the use of pressure-sensitive adhesives that flow when force is applied (i.e., if the adhesive matrix did not flow, the TDS would not stick). The magnitude of the cold flow is generally dependent on the product formulation, storage conditions, and storage time. Cold flow should be qualitatively and quantitatively measured by a suitable method. It is up to the TDS manufacturer to determine the most suitable cold flow test for each drug product. Acceptance criteria are product specific and defined to ensure that the cold flow of each batch of TDS is within the range defined by the product design and is consistent between batches based on the product development specifications and statistical assessment of multiple batches over the product's shelf life.

Shear Test

The *Shear Test* measures the cohesive strength of a TDS. It can be measured under static (see *Static Shear Test*) or dynamic conditions. Shear testing may not be feasible for all TDS because the presence of multiple layers of adhesive in the system, the presence of a membrane or scrim, or the use of an emulsion adhesive system may result in the inability to achieve cohesive failure. TDS that are constructed with a peripheral adhesive ring or form-fill-seal TDS may not be suitable for this test. It is up to the TDS manufacturer to decide if a shear test is appropriate, and if so, which shear test is most appropriate for each drug product. Acceptance criteria are product specific and defined to ensure that the shear of each batch of TDS is within the range defined by the product design and is consistent between batches based on the product development specifications and statistical assessment of multiple product batches over the product's shelf life.

Static Shear Test

For the *Static Shear Test*, the time required to remove a standard area of the TDS from the substrate (i.e., stainless steel test panel) under a standard load (e.g., 250 g) is measured. The TDS is applied to a test panel, and the sample is subjected to a shearing force by means of a given weight suspended from the TDS. The test apparatus holds the test panels at 0°– 2° from vertical to ensure that the TDS will not experience peeling action when the weight is attached. Dwell time, weight used, test panel type, mode of failure, and sample size should be noted; the time taken for the TDS sample to detach from the test panel is reported. This procedure is repeated using a minimum of five independent samples yielding valid results (see *Determination of the Validity of Static Shear Test*). The product fails the test if the mean shear force (i.e., arithmetic mean or geometric mean as determined by the manufacturer) is outside the acceptable range determined during product development and based on statistical assessment of multiple product batches over the product's shelf life.

DETERMINATION OF THE VALIDITY OF STATIC SHEAR TEST

Cohesion is the desired failure mode for the static shear test. Cohesive failure is indicated when adhesive is left on the TDS and on the stainless steel test panel. In contrast, an adhesive failure occurs when: 1) the TDS strips cleanly from the stainless steel panel, leaving no visible adhesive on the stainless steel panel; 2) the adhesive transfers to the stainless steel test panel, leaving no adhesive on the TDS; or 3) the TDS delaminates at an interface (e.g., between a membrane and an adhesive layer, or between the two different adhesive layers of a bilayer product). If adhesive failure is indicated, the sample test is invalid. In addition, if the TDS breaks or tears before detaching from the stainless steel test panel or the TDS slides out of the clamp or the hanging weight does not hang freely, the sample test is invalid.

Leak Test

This test is applicable only for form-fill-seal–type (reservoir or pouched) TDS. Form-fill-seal TDS must be manufactured with zero tolerance for leaks because of their potential for dose dumping if leaking occurs.

In-process control methods to examine TDS for leaks or potential leaks are needed and require considerable development on the part of TDS manufacturers.

IN-PROCESS TESTING

During the manufacturing process, the presence of leakage (or potential for leakage) due to TDS perforation, cuts, and faulty seals resulting from failures such as air bubbles, gel splash, or misalignment of a TDS backing and release liner layers must be examined. Unless automated process analytical technology is implemented, in-process testing to identify these defects should be performed using the following test procedures.

Visual inspection:

- A specified number of TDS, defined on the basis of batch size, should be examined randomly.
- Each sampled TDS should be thoroughly visually inspected for leakage.
- The product fails if any of the TDS examined are detected with a leak.

Seal integrity: TDS seals should be stress tested to ensure that the application of pressure does not force seals to open, thereby leading to leakage.

- A specified number of TDS, defined on the basis of batch size, should be randomly examined.
- Each sampled TDS should be thoroughly visually inspected for leakage.
- Each sampled TDS is placed on a hard, flat surface and overlaid with a weight so that it is subjected to 13.6 kg. The weight should be left in place for 2 min. Upon removal of the weight, the TDS should be visually inspected for leakage.
- The product fails if the number of TDS detected with a leak is greater than the acceptable limit established by the manufacturer.

Packaged product testing: TDS may leak after they have been individually placed in the primary packaging material as a result of the packaging operation itself or by a user opening the packaging. Therefore, TDS should be tested for leakage after they have been manufactured and packaged in their primary packaging material.

- A specified number of TDS, defined on the basis of batch size, should be randomly examined after they have been placed in their primary packaging material.
- The sampled TDS should be removed from their packaging and thoroughly visually inspected for leakage.
- Each sampled TDS should then be uniformly wiped with a solvent-moistened swab. Both the backing side and the release liner side of the TDS should be wiped. The inside surface of the pouch should also be wiped. The swab(s) is then extracted and assayed for the drug.
- The product fails if the total amount of drug from the TDS, and the corresponding pouch, exceed the acceptable limit established by the manufacturer.

⟨4⟩ MUCOSAL DRUG PRODUCTS—PRODUCT QUALITY TESTS

INTRODUCTION

The mucosal route of drug administration is subdivided into seven membrane surfaces for the purposes of taxonomic distinction of dosage forms by route of administration. These membrane surfaces are characterized as otic, ophthalmic, nasal, oropharyngeal, urethral, vaginal, and rectal. This grouping does not include the pulmonary mucosal route addressed in *Inhalation and Nasal Drug Products—General Information and Product Quality Tests* ⟨5⟩. A drug product is administered to any of these seven mucosal surfaces to effect either local action or systemic absorption. Local action is to the area proximate to application. Where local action is intended, systemic absorption is not typically desired and is unnecessary for therapeutic effect. In some cases, however, the mucosal delivery of a drug for systemic absorption is used because it avoids first-pass metabolism, it provides more rapid systemic delivery, or it provides an alternative when oral delivery (to the gastrointestinal tract) is not possible due to a disease state. A large number of the dosage forms listed in *Pharmaceutical Dosage Forms* ⟨1151⟩ can be delivered by way of the various membrane surfaces in the mucosal category. [NOTE—All references to chapters above 1000 are for informational purposes only, for use as a helpful resource. These chapters are not mandatory unless explicitly called out for application.]

Analytical procedures and acceptance criteria for testing drug products are divided into two categories: those that assess general product quality attributes and those that assess product performance. Drug product quality tests assess attributes such as identification, assay (strength), dose content uniformity, and impurities and are usually part of the compendial monograph. Product performance tests include the dissolution test for a solid oral dosage form, *Dissolution* ⟨711⟩, and the drug release test, *Drug Release* ⟨724⟩. Taken together, quality and performance tests ensure the identity, strength, quality, and purity of a mucosal drug product.

This chapter provides lists of consolidated common product quality test requirements in a concise and coherent fashion. This chapter applies, in part or in its entirety, when referenced in a drug product monograph (see *General Notices, 3.10 Applicability*

of Standards). The quality tests listed can be used, as appropriate, by manufacturers toward the development of new drug product monographs for submission to the *USP*.

PRODUCT QUALITY TESTS FOR MUCOSAL DRUG PRODUCTS

This chapter provides product quality tests that are generally necessary, tests that apply to specific products, and tests that apply to one or more of the specific mucosal routes. Quality tests listed under a specific mucosal route in this chapter represent expectations for any dosage form administered by that specific route.

Generally Necessary Tests

Product quality attributes for mucosal dosage forms should reflect acceptable requirements for marketed products. The following tests should be generally applied to all dosage forms intended for mucosal delivery. Tests that are generally necessary for any article include: *Definition*, *Identification*, *Assay*, and *Impurities* (organic, inorganic, and residual solvents). *Uniformity of Dosage Units* ⟨905⟩ is typically included in a *USP* product monograph.

DEFINITION

The definition section (see *General Notices, 4.10 Monographs*) in a *USP* monograph describes the drug product and specifies the range of acceptable assayed content of the drug substance(s) present in the dosage form. For certain products, the definition includes any relevant additional information, such as the presence or absence of other components, excipients, or adjuvants, and cautionary statements on toxicity and stability. Appearance information is used in a regulatory submission to aid in product identification. Because the size, shape, color, and other attributes are attributes of individual marketed products, a qualitative description is typically not required as part of a *USP* monograph (see ⟨1151⟩).

IDENTIFICATION

Identification is included in a monograph as an aid in verifying the identity of the article (see *General Notices, 5.40 Identity*).

ASSAY

The assay is used to determine the strength (content) of the drug product. Typically, the assay is specific and stability-indicating. When a nonspecific assay is justified, other supporting analytical procedures should ensure that any interfering species will be detected and can be limited. Assay results are often reported as a percentage of the label claim, with acceptance criteria that are typically in the range from 90.0% to 110.0%. For some antibiotic products, the range may be wider. The width of these limits is intended to allow for manufacturing variability, including changes in stability, as well as analytical variation. The narrower acceptance range of 95.0%–105.0% is used less often and with justification.

IMPURITIES

Process impurities include those arising from starting materials, synthetic byproducts, and other inorganic and organic impurities that may be present in the drug substance and in the excipients used in the manufacture of the drug product. These impurities are limited, as specified within the drug substance and excipient monographs. Impurities in the drug product may also result from degradation of the drug substance or excipients, from interactions between the drug substance and an excipient, or from interactions between the drug substance and the packaging components. The procedures and acceptance criteria should specifically limit toxic degradation products as well as degradation products that compromise the quality of the article if they exceed certain levels. A more complete discussion of impurities is provided in *Impurities in Drug Substances and Drug Products* ⟨1086⟩[1] and in ICH Q3B Impurities in New Drug Products.[1]

UNIFORMITY OF DOSAGE UNITS

Chapter ⟨905⟩ is used to ensure the consistency of drug substance content in dosage units within a narrow range around the label claim. The test is applied only to dosage forms containing a single dose or a part of a dose of the drug substance in each unit. Uniformity of dosage units may be demonstrated by one of two methods: content uniformity or weight variation. Content uniformity is based on the assays of a number of individual dosage units. Weight variation can be used to estimate content uniformity under certain conditions.

[1] ICH Q3B (R2) Impurities in New Drug Products, 2006, http://www.ich.org/products/guidelines/quality/article/quality-guidelines.html. Accessed 28 May 2015.

Dosage Forms by Specific Mucosal Route and Product-Specific Tests

In addition to the generally necessary product quality tests already discussed, the dosage form may require specific quality tests that are common across routes of administration. *Injections and Implanted Drug Products* ⟨1⟩ provides testing requirements common to injectable and implantable products. *Oral Drug Products—Product Quality Tests* ⟨2⟩ provides testing requirements for tablets and lozenges. *Topical and Transdermal Drug Products—Product Quality Tests* ⟨3⟩ provides testing requirements common to semisolids (creams, ointments, and gels). Chapter ⟨5⟩ presents testing requirements for sprays and aerosols. Where a dosage form has no specific test given in this chapter, no additional test is required unless included in the individual monograph specification.

OTIC ROUTE

The otic route is characterized by administration of a preparation into, or by way of, the ear. Demonstration of sterility (see *Sterility Tests* ⟨71⟩) is not always required for products delivered to the ear. Typically, sterility is required where the product is administered to the inner ear or where the eardrum is damaged. Where sterility is not required, the quantitative enumeration of mesophilic bacteria and fungi that grow under anaerobic conditions, *Microbial Enumeration Tests* ⟨61⟩, or the determination of the absence or limited occurrence of specified organisms, *Tests for Specified Microorganisms* ⟨62⟩, may be required.

If an antimicrobial preservative is used, *Antimicrobial Effectiveness Testing* ⟨51⟩ and *Antimicrobial Agents—Content* ⟨341⟩ may be required.

Dosage forms given by the otic route include liquids, solutions, and suspensions.

OPHTHALMIC ROUTE

The ophthalmic route is to the eye. In addition to the generally necessary tests, the following specific tests for ophthalmic drug products should be considered (see *Table 1*). For products that are injected or implanted into the eye, see ⟨1⟩. Some of the important product quality tests for products administered by the ophthalmic route are listed below. See *Ophthalmic Products—Quality Tests* ⟨771⟩ for details and other product quality information.

- Particulate and Foreign Matter
- Sterility
- Particle Size and Particle Size Distribution
- Antimicrobial Preservative

Table 1. Drug Products Administered by the Ophthalmic Route, with Product-Specific Tests

Ophthalmic Route	
Dosage Form	**Product-Specific Tests**
Gels	*Minimum Fill* ⟨755⟩ ⟨3⟩
Emulsions	*Osmolality and Osmolarity* ⟨785⟩ *pH* ⟨791⟩ Surface tension *Viscosity—Capillary Methods* ⟨911⟩ *Viscosity—Rotational Methods* ⟨912⟩ Zeta potential
Inserts	*Bacterial Endotoxins Test* ⟨85⟩
Ointments	⟨755⟩ ⟨3⟩
Solutions	*Particulate Matter in Ophthalmic Solutions* ⟨789⟩ ⟨791⟩ ⟨911⟩ ⟨912⟩ *Viscosity—Rolling Ball Method* ⟨913⟩ ⟨785⟩
Strips	Currently no specific tests (additional specific monograph requirements may apply)

Table 1. Drug Products Administered by the Ophthalmic Route, with Product-Specific Tests *(Continued)*

Ophthalmic Route	
Dosage Form	**Product-Specific Tests**
Suspensions	⟨791⟩ ⟨785⟩ Particle size and particle size distribution ⟨911⟩ ⟨912⟩ ⟨913⟩

NASAL ROUTE

The nasal route is administration to the nose, or by way of the nose, for local or systemic effect (see *Table 2*).

Table 2. Drug Products Administered by the Nasal Route, with Product-Specific Tests

Nasal Route	
Dosage Form	**Product-Specific Tests**
Aerosols	⟨5⟩
Gels (Jelly)	⟨755⟩ ⟨3⟩
Ointments	⟨755⟩ ⟨3⟩
Sprays	⟨5⟩
Solutions	⟨5⟩

OROPHARYNGEAL ROUTE

The oropharyngeal route is into the oral cavity and/or pharyngeal region. The oropharyngeal route is subclassified by the specific intra-oral surfaces, such as buccal or sublingual. Buccal and sublingual administrations are typically intended to promote systemic absorption by permeation through the respective mucosa. However, in this context, oral administration may mean topical application for local action (see *Table 3*). Product quality tests for products administered to oropharyngeal surfaces often conform to those for oral administration to the gastrointestinal tract (see ⟨2⟩).

Table 3. Drug Products Administered by the Oropharyngeal Route, with Product-Specific Tests

Oropharyngeal Route	
Dosage Form	**Product-Specific Tests**
Buccal patches	See ⟨3⟩ for testing requirements common to patches.
Films	Currently no specific tests (additional specific monograph requirements may apply)
Gels	⟨755⟩ ⟨3⟩
Gums	Currently no specific tests (additional specific monograph requirements may apply)
Lozenges	Currently no specific tests (additional specific monograph requirements may apply)
Ointments	⟨3⟩ ⟨755⟩
Solutions (Rinses)	Currently no specific tests (additional specific monograph requirements may apply)
Sprays	⟨5⟩
Tablets	⟨2⟩

URETHRAL ROUTE

The urethral route is into the urethra, typically for local action, but systemic distribution is also possible. Chapters ⟨61⟩ and ⟨62⟩ may apply. Drug products in this category include urethral inserts.

VAGINAL ROUTE

The vaginal route is into the vagina, typically for local action, but systemic distribution is also possible. Chapters ⟨61⟩ and ⟨62⟩ may apply (see *Table 4*).

Relative foam density: Determine relative foam density by weighing a mass of foam (m) and a mass of the same volume of water (e) in a flat-bottom dish. Relative foam density = m/e.

Volume of foam expansion: Estimate the volume of foam expansion at 25° using a graduated buret and a foam-generating container equipped with a dose-actuating device and fitted to the buret.

Table 4. Drug Products Administered by the Vaginal Route, with Product-Specific Tests

Vaginal Route	
Dosage Form	**Product-Specific Tests**
Creams	⟨755⟩ ⟨3⟩
Foams	⟨755⟩ Physical appearance (of the foam and of the collapsed foam) *Relative foam density* *Volume of foam expansion*
Gels	⟨755⟩ ⟨3⟩
Inserts	Currently no specific tests (additional specific monograph requirements may apply)

RECTAL ROUTE

The rectal route is into the rectum. Rectally administered products may produce local effect(s) or delivery to the systemic circulation.

Softening time of lipophilic suppositories: The test is intended to determine, under defined conditions, the time that elapses until a suppository maintained in water at 37 ± 0.5° softens to the extent that it no longer offers resistance when a defined weight is applied (see *Table 5*).

Table 5. Drug Products Administered by the Rectal Route, with Product-Specific Tests

Rectal Route	
Dosage Form	**Product-Specific Tests**
Foams	⟨755⟩ Physical appearance (of the foam and of the collapsed foam) *Relative foam density* *Volume of foam expansion*
Ointments	⟨755⟩ ⟨3⟩
Suppositories	Softening time of lipophilic suppositories
Solutions	Currently no specific tests (additional specific monograph requirements may apply)
Suspensions	Currently no specific tests (additional specific monograph requirements may apply)

⟨5⟩ INHALATION AND NASAL DRUG PRODUCTS—GENERAL INFORMATION AND PRODUCT QUALITY TESTS

1. INTRODUCTION

Inhalation drug products deliver a drug substance into the lungs by oral inhalation and include inhalation aerosols, inhalation powders, inhalation sprays, inhalation solution, inhalation suspension, solution for inhalation, and drug for inhalation solution dosage forms. Nasal drug products deliver drugs into the nasal cavity and include nasal aerosols, nasal sprays, nasal solutions, and nasal powder dosage forms. This chapter does not address nasal products in the gels and ointments form. See *Table 1* for established names and definitions of these dosage forms. Definitions of these drug product dosage forms, brief informa-

tion about their manufacture, and a glossary of dosage form names can be found in *Pharmaceutical Dosage Forms* ⟨1151⟩. [NOTE—All references to chapters above 1000 are for informational purposes only, for use as a helpful resource. These chapters are not mandatory unless explicitly called out for application.]

Table 1. Established Names and Definitions

Established Name	Definition
Inhalation Aerosol	A drug product for oral inhalation that is packaged under pressure and delivers a specified amount of therapeutically active ingredient(s) upon activation of an accurately metered valve system. Inhalation aerosols are more commonly known as metered-dose inhalers or MDIs.
Inhalation Powder	Drug powder for oral inhalation with the use of a device that aerosolizes and delivers an accurately metered amount of the therapeutically active ingredient(s). Inhalation Powders are more commonly known as dry powder inhalers or DPIs.
Inhalation Spray	A nonpressurized, accurately metered, liquid drug dosage form for oral inhalation that is packaged in a container that upon activation delivers fine droplets of the formulation
Inhalation Solution	A drug solution for oral inhalation with the use of a nebulization system
Inhalation Suspension	A drug suspension for oral inhalation with the use of a nebulization system
Solution for Inhalation	A drug solution for oral inhalation that must be diluted before it is administered with the use of a nebulization system
[Drug] for Inhalation Solution	A drug powder that, upon the addition of a suitable vehicle, yields a solution conforming in all respects to an Inhalation Solution
Nasal Aerosol	A drug product for local application into the nasal passages that is packaged under pressure and delivers a specified amount of therapeutically active ingredient(s) upon activation of an accurately metered valve system
Nasal Spray	A nonpressurized, accurately metered, liquid drug dosage form for local application into the nasal passages that is packaged in a container that upon activation delivers droplets of the formulation
Nasal Solution	A nonpressurized, liquid drug dosage form for local application into the nasal passages
Nasal Powder	Drug powder for local application into the nasal passages with the use of a device that delivers and aerosolizes an accurately metered amount of the therapeutically active ingredient(s)

This chapter provides lists of consolidated common product quality test requirements in a concise and coherent fashion. This general chapter applies, in part or in its entirety, when referenced in a drug product monograph (see *General Notices, 3.10 Applicability of Standards*), and includes the quality tests for the specific route of administration. The quality tests listed can be used, as appropriate, by manufacturers toward the development of new drug product monographs for submission to the *USP–NF*. If a validated performance test procedure is available for the specific drug product, it is identified in a general chapter below 1000. Additional information, or information on promising technologies that have not yet been fully validated, may be presented in informational chapters above 1000.

Drug Product General Quality Tests and Performance Quality Tests

A *USP* drug product monograph contains tests, analytical procedures, and acceptance criteria. Drug product tests are divided into two categories: 1) those that assess general quality attributes, and 2) those that assess product performance quality, e.g., delivered dose uniformity and its physical characteristics, such as aerodynamic particle size distribution. General quality tests assess the integrity of the dosage form, whereas performance quality tests assess delivery of the drug and other attributes that may relate to in vivo drug performance.

Taken together, quality and performance tests ensure the identity, strength, quality, and purity of inhalation and nasal drug products.

The next two sections of this chapter list product quality attributes for inhalation drug products and for nasal drug products, respectively. The final section describes in greater detail the quality tests for inhalation and nasal drug products. *Inhalation and Nasal Drug Products: Aerosols, Sprays, and Powders—Performance Quality Tests* ⟨601⟩ contains product performance tests for inhalation and nasal drug products and should be used in conjunction with this chapter.

2. GENERAL QUALITY TESTS FOR INHALATION DRUG PRODUCTS

Inhalation Aerosol

DESCRIPTION

Aerosol in this context is a dosage form consisting of a liquid or solid preparation packaged under pressure and intended for administration as a fine mist. The descriptive term aerosol also refers to the fine mist of small droplets or solid particles that are emitted from the product. Inhalation aerosols, also known as MDIs, are preparations characterized by dispersion of the active pharmaceutical ingredient into the airways during oral inspiration for either local or systemic effect, and nasal aerosols, also known as nasal MDIs, are characterized by deposition in the nasal cavity for either local or systemic effect.

An aerosol formulation typically contains a drug substance(s) dissolved or suspended in a propellant(s) or a mixture of propellant(s) and co-solvent(s) and possibly other suitable excipients. An inhalation aerosol drug product, commonly known as an

MDI, delivers a specified amount and quality of therapeutically active ingredient(s) upon activation of an accurately metered valve system. General quality tests for inhalation aerosol drug products should include the following (see *4. Description of Product Quality Tests* for more detailed discussions of each test):

- Identification
- Assay
- Impurities and Degradation Products
- Water Content
- Foreign Particulate Matter
- Leachables
- Spray Pattern
- Microbial Limit
- Alcohol Content (if present)
- Net Fill Weight
- Leak Rate
- For performance quality tests, refer to 〈601〉

Inhalation Solution

DESCRIPTION

Inhalation solution drug products typically are water-based and are sterile preparations. They are intended for delivery to the lungs by nebulization with a specified external nebulizer. Such drug preparations typically are packaged in single-dose semipermeable containers and also include protective packaging to minimize ingress of volatile foreign contaminants, loss of solvent, and exposure to oxygen and light. Nebulization involves continuous generation and delivery to the patient of a fine mist of aqueous droplets containing a drug solution by means of ultrasonic energy, Venturi effect, or other appropriate mechanical/electrical means. General quality tests for inhalation solutions should include the following (see *4. Description of Product Quality Tests* for more detailed discussions of each test):

- Identification
- Assay
- Impurities and Degradation Products
- Content Uniformity (premetered)
- Assay for Antimicrobial Preservative and Stabilizing Excipients (if present)
- Sterility
- Foreign Particulate Matter
- pH
- Osmolality
- Leachables
- Net Fill Weight
- Weight Loss
- For information on performance quality tests, refer to *Products for Nebulization—Characterization Tests* 〈1601〉

Inhalation Suspension

DESCRIPTION

Inhalation suspension drug products typically are water-based and are sterile preparations. They are intended for delivery to the lungs by nebulization with a specified external nebulizer. Such drug preparations typically are packaged in single-dose semipermeable containers and also include protective packaging to minimize ingress of volatile foreign contaminants, loss of solvent, and exposure to oxygen and light. Nebulization involves continuous generation and delivery to the patient of a fine mist of aqueous droplets containing the formulation components by means of ultrasonic energy, Venturi effect, or other appropriate mechanical means. General quality tests for inhalation suspensions should include the following (see *4. Description of Product Quality Tests* for more detailed discussions of each test):

- Particle size distribution of the formulation in the immediate container
- For all other general quality attributes, refer to the previous *Inhalation Solution* attributes

Solution for Inhalation

DESCRIPTION

Solution for inhalation drug products typically are water-based and are sterile preparations. Upon dilution, in accordance with labeling, including identity and amount of dilution vehicle, they are intended for delivery to the lungs by nebulization using an external nebulizer. Such drug preparations typically are packaged in single-dose semipermeable containers and also include a protective packaging to minimize ingress of volatile foreign contaminants, loss of solvent, and exposure to oxygen and light. Nebulization involves continuous generation and delivery to the patient of a fine mist of aqueous droplets containing the formulation components by means of ultrasonic energy, Venturi effect, or other appropriate mechanical/electrical means. General quality tests for solutions for inhalation should include the following (see *4. Description of Product Quality Tests* for more detailed discussions of each test):

- Clarity and color of solution upon dilution in accordance with the labeling
- For all other general quality attributes, refer to the previous *Inhalation Solution* attributes

Drug for Inhalation Solution

DESCRIPTION (POWDER)

Drug for inhalation solution is a (specified color) drug powder formulation that upon the addition of a suitable vehicle, in accordance with labeling, including identity and amount of dilution vehicle, yields a solution conforming in all respects to the *Inhalation Solution* requirements. General quality tests for drug for inhalation solutions should include the following (see *4. Description of Product Quality Tests* for more detailed discussions of each test):

- Water content
- Clarity, color, and completeness of solution within specified time, upon reconstitution
- For all other general quality attributes, refer to the previous *Inhalation Solution* attributes upon (re)constitution of the drug product

Inhalation Spray

DESCRIPTION

Inhalation spray drug products typically are water-based liquid formulations packaged in a compact container–closure system containing an integral spray pump unit that, upon activation, delivers an accurately metered amount of fine mist of droplets of the formulation. The droplets can be generated by various means such as mechanical action, power assistance, or energy from the patient's inspiration. The mechanisms by which they generate droplets distinguish the various types of inhalation sprays. These drug products may be unit-dose or multidose presentations. Inhalation spray drug products may be designed as premetered or device-metered presentations. A premetered unit contains a previously measured amount of liquid formulation in an individual container (e.g., a blister) that is inserted in the device by the patient before use. A device-metered product contains a sufficient amount of liquid formulation for a prescribed number of doses in a reservoir, and each dose is delivered as an accurately metered spray by the device throughout the unit's life. General quality tests for inhalation sprays should include the following (see *4. Description of Product Quality Tests* for more detailed discussions of each test):

- Plume geometry
- For all other general quality attributes, refer to the previous *Inhalation Solution* attributes.
- For performance quality tests, refer to ⟨601⟩

Inhalation Powder

DESCRIPTION

Inhalation powder drug products, commonly known as dry powder inhalers (DPIs), dispense powders for inhalation with the use of a device that aerosolizes and delivers an accurately metered amount of active ingredient(s) with consistent physical characteristics alone or with a suitable excipient(s). Current designs include premetered and device-metered DPIs, all of which rely on various energy sources to create and disperse the aerosol during patient inspiration.

Premetered DPIs contain previously measured amounts of formulation in individual containers (e.g., capsules or blisters) that are inserted into the device before use. Premetered DPIs also may contain premetered dose units as ordered multidose assemblies in the delivery system. Device-metered DPIs have an internal reservoir that contains a sufficient quantity of formulation for multiple doses that are metered by the device itself during actuation by the patient. General quality tests for inhalation powders should include the following (see *4. Description of Product Quality Tests* for more detailed discussions of each test):

- Identification

- Assay
- Impurities and Degradation Products
- Content Uniformity (premetered)
- Water Content
- Foreign Particulate Matter
- Microbial Limit
- Net Content (device-metered)
- Residual Solvents
- Volatile and Semivolatile Leachables
- For performance quality tests, refer to ⟨601⟩

3. GENERAL QUALITY TESTS FOR NASAL DRUG PRODUCTS

Nasal Aerosol

Refer to the previous *Inhalation Aerosol* attributes.

Nasal Spray

DESCRIPTION

Nasal spray drug products typically are water-based liquid formulations applied to the nasal cavity for local and/or systemic effects. They contain therapeutically active ingredient(s) dissolved or suspended in solution or mixtures of excipients in a nonpressurized compact container–closure system. The container–closure system includes an integral spray pump unit that upon activation delivers a spray containing an accurately metered amount of fine mist of droplets of the formulation. Dispersion of the formulation as a spray typically is accomplished by forcing the formulation through the nasal actuator and its orifice. Often, such drug products are multidose device-metered (see *Inhalation Spray*) presentations in which the dose is metered by the spray pump. Nasal spray drug products also may be designed as premetered presentations. General quality tests for nasal sprays should include the following (see *4. Description of Product Quality Tests* for more detailed discussions of each test):

- Identification
- Assay
- Impurities and Degradation Products
- Assay for Preservative and Stabilizing Excipients (if present)
- Content Uniformity (premetered)
- Particle Size Distribution (for suspensions)
- Foreign Particulate Matter
- Spray Pattern
- Microbial Limit
- Leachables
- Net Fill Weight
- pH
- Osmolality
- Viscosity
- Sterility (premetered)
- For performance quality tests, refer to ⟨601⟩

Nasal Powder

Refer to the previous *Inhalation Powder* quality attributes.

Nasal Solution

DESCRIPTION

Nasal solutions are drug products that typically are water-based liquid formulations applied to the nasal cavity for local effect. They may contain drug substance(s) dissolved in solution or mixtures of excipients in a nonpressurized compact container–closure system. The container–closure system includes a delivery system that administers nonmetered amounts of drops or a fine mist of droplets of the formulation. Typically, such drug products are multidose presentations. General quality tests for nasal solution drug products should include the following (see *4. Description of Product Quality Tests* for more detailed discussions of each test):

- Identification
- Assay
- Impurities and Degradation Products
- Assay for Preservative and Stabilizing Excipients (if present)
- Foreign Particulate Matter
- Microbial Limit
- Leachables
- Net Fill Weight
- pH
- Osmolality
- Viscosity

4. DESCRIPTION OF PRODUCT QUALITY TESTS

Product quality tests are listed as follows, and should be applied to inhalation and nasal drug products and to products for nebulization. Product-specific quality tests are addressed in product monographs.

Description

See the previous corresponding dosage forms and the respective labels for the monograph of a drug product.

Alcohol Content (if present)

If alcohol is used in a drug product formulation, a specific assay with appropriate acceptance criteria should be included.

Assay (strength and content uniformity)

The USP Assay test of a drug substance in the drug product container is determined by means of a validated stability-indicating procedure following *Validation of Compendial Procedures* ⟨1225⟩. The USP Assay test should measure available drug substance and its stability, including adherence of the drug substance to the container and closure components. Appropriate acceptance criteria can provide added assurance of manufacturing reproducibility and may ensure better conformance in other performance attributes (e.g., delivered dose uniformity).

If a drug product is labeled to contain a single enantiomer of a chiral drug substance, analysts can use a chiral assay or a combination of an achiral assay and a validated procedure to control the presence of the undesired enantiomer as an impurity.

Assay for Preservative and Stabilizing Excipients (if present)

The assay of any preservative (e.g., an antimicrobial) or stabilizing excipient (e.g., an antioxidant, an agent specifically added to minimize or prevent degradation) in a multidose container should be determined analytically, typically with a validated stability-indicating procedure following current ICH Q2 guidance. The corresponding acceptance criteria normally are based on appropriate preservative effectiveness demonstrated by a microbial challenge test.

Content Uniformity for Premetered Dosage Forms

See *Uniformity of Dosage Units* ⟨905⟩.

Clarity and Color of Solution upon Dilution

Solution for inhalation and drug for inhalation solution dosage forms must be diluted and reconstituted in accordance with labeling before administration by nebulization. The type and amount of the vehicle used for dilution and reconstitution must be specified on the labeling. Appropriate studies must be undertaken to fully assess the clarity and color of the solution upon dilution and reconstitution. The studies also should include appropriate physical and chemical stability studies, as well as studies of performance characteristics.

Foreign Particulate Matter

Foreign particulate matter in these drug products should be adequately controlled. Particulate matter in inhalation and nasal drug products may originate during manufacturing and from formulation and container–closure components. For toxicological assessment, the type, origin, amount, and size of foreign particulates, including fine particulates (e.g., less than 10 µm), should be determined throughout the stability storage period.

Identification

A specific identification test or tests are used to verify the identity of the drug substance in the drug product. If a nonspecific method is used for identification, then it should be combined with a second independent and complementary method. A specific identification test for polymorphic forms should be carried out. Moreover, if the drug substance is a salt, an appropriate identification test also should be included for the counterion.

Impurities and Degradation Products

Validated stability-indicating analytical procedure(s) following current ⟨1225⟩ should be used to determine the levels of impurities and degradation products in a drug product. Typically, the acceptance criteria are set for individual, total unspecified, and total impurities and degradation products following current ICH Q3B. For reporting, identification, and qualification thresholds and other relevant information, follow current ICH Q3B guidance.

Leachables

Inhalation and nasal drug products should be evaluated for compounds that may leach from elastomeric and plastic components and from coatings of components of the container–closure system in direct contact with the formulation. Additionally, the drug product inadvertently may contain other residual contaminants from manufacturing and processing. Leachables may include polynuclear aromatics, nitrosamines, monomers, plasticizers, accelerators, antioxidants, and vulcanizing agents. Processing contaminants may include surface-treatment or processing agents that may dissolve, chemically associate, or become suspended in the formulation.

Thus, throughout the expiration-dating period, the drug product should be evaluated for compounds that can migrate into the formulation from a variety of sources. The type of testing that should be performed depends on whether the formulation is a powder or a liquid and the composition of the container–closure system, e.g., a drug product packaged in a semipermeable container should be evaluated for ingress of volatile leachables. Appropriate specifications using validated analytical procedures should be applied to identify, monitor, and quantify the compounds in the drug product with appropriate minimum levels of quantification. Corresponding acceptance criteria should be established and justified from toxicological and safety perspectives.

Leak Rate

Leak rate studies of inhalation and nasal aerosol drug products can be used during drug product development and characterization to support the selection of appropriate container–closure components (e.g., valve and canister) and drug product manufacturing parameters, including the crimping process. The specifications for the USP Leak Rate testing studies can include multiple units from each batch based on weight difference determination with time at a specified temperature. See *Leak Rate* ⟨604⟩ for additional information.

Microbial Limits

The microbial quality of dosage forms where indicated in *2. General Quality Tests for Inhalation Drug Products* and *3. General Quality Tests for Nasal Drug Products* normally is controlled by appropriate validated test(s) and acceptance criteria for total aerobic count, total yeasts and molds count, and freedom from designated indicator pathogens. Acceptance criteria can be expressed on a per-container basis. Refer to *Microbial Enumeration Tests* ⟨61⟩ and *Alternative Microbiological Sampling Methods for Nonsterile Inhaled and Nasal Products* ⟨610⟩ for additional information.

Net Fill Weight

The total net weight of the formulation in the container should be assessed and controlled with a test and acceptance criteria.

Osmolality

To control the tonicity of the formulation of dosage forms where indicated in *2. General Quality Tests for Inhalation Drug Products*, the product should be tested for osmolality with appropriate specifications as described in *Osmolality and Osmolarity* ⟨785⟩.

pH

Appropriate specification for the pH of the formulation of dosage forms where indicated in *2. General Quality Tests for Inhalation Drug Products* and *3. General Quality Tests for Nasal Drug Products* should be established as described in *pH* ⟨791⟩.

Particle Size Distribution

For inhalation suspension and suspension nasal spray drug products, appropriate method(s) and corresponding acceptance criteria can be used for the determination of the particle size distribution of the drug substance particles in the formulation within the container.

Plume Geometry

Because various factors can affect the plume characteristics of the spray of an inhalation aerosol, inhalation spray, nasal aerosol, or nasal spray drug product, its full characterization is important for assessing the performance of the delivery system. Plume geometry can be determined by a variety of procedures using appropriately validated methods. Plume geometry also can be controlled by appropriate acceptance criteria that measure spray pattern characteristics, including shape and size of the evolving spray plume under defined experimental and instrumental test conditions.

Reconstitution and Time (powder)

Drug for inhalation solution dosage forms must be (re)constituted before administration with the use of a specified nebulization system. Hence, appropriate compatibility studies should be undertaken to fully assess the type and amount of the solvent(s), as well as (re)constitution time for preparation of the final solution for patient administration. The compatibility studies also should include appropriate physical and chemical stability studies on the reconstituted solution, including its performance characterization.

Residual Solvent

Suitable and validated tests should be used to determine the levels of any solvent(s) in the drug product. Refer to *Residual Solvents* ⟨467⟩ for additional information.

Spray Pattern

Because various factors can affect the spray pattern of an inhalation aerosol, nasal aerosol, or nasal spray drug product, full spray pattern characterization is important for assessing the performance of the specific valve and the actuator or the pump. The spray pattern can be determined using appropriately validated methods and corresponding acceptance criteria that measure the shape, density, and size of the pattern. The test procedure for spray patterns normally is specific to the drug product and may include, among others, the distance between the mouthpiece and the measurement plane or collection surface, minimum number of actuations per spray pattern to enable discrimination, orientation of the collection surface relative to the mouthpiece, and visualization procedure(s).

Sterility

All inhalation water-based dosage forms are sterile preparations and should meet the requirements of *Sterility Tests* ⟨71⟩.

Viscosity

A test for viscosity with appropriate acceptance criteria should be included for dosage forms where indicated in *2. General Quality Tests for Inhalation Drug Products* and *3. General Quality Tests for Nasal Drug Products* as appropriate (see *Viscosity—Capillary Methods* ⟨911⟩).

Water Content

Appropriate specification for water content of dosage forms where indicated in *2. General Quality Tests for Inhalation Drug Products* and *3. General Quality Tests for Nasal Drug Products* should be established to ensure the drug product's continued stability and acceptable performance of the drug product. Validated analytical procedures should be used as described in *Water Determination* ⟨921⟩. Proceed as directed in ⟨921⟩ with the following modification: provide the closed-system titrating vessel with an opening through which passes a coarse-porosity gas dispersion tube connected to a sampling cylinder.

Weight Loss

Drug products should be evaluated for weight loss, e.g., drug products packaged in semipermeable containers, to assess the moisture-loss protective properties of the overall container–closure system.

⟨7⟩ LABELING

DEFINITION

The term *labeling* designates all labels and other written, printed, or graphic matter on an article's immediate container or on, or in, any package or wrapper in which it is enclosed, except any outer shipping container. The term *label* designates that part of the labeling on the immediate container.

A shipping container that contains a single article, unless the container also is essentially the immediate container or the outside of the consumer package, must be labeled with a minimum of product identification (except for controlled articles), lot number, expiration date, and conditions for storage and distribution.

LABELS AND LABELING FOR DRUG PRODUCTS EXPRESSED AS ACTIVE MOIETY IN NAME AND STRENGTH

The names and strengths of drug products and compounded preparations shall be expressed in terms of the active moiety and its corresponding strength on the label (see *Nomenclature* ⟨1121⟩, *Monograph Naming Policy for Salt Drug Substances in Drug Products and Compounded Preparations*).

Exceptions: In those rare cases in which the use of the specific salt form of the active moiety in the title provides vital information from a clinical perspective, an exception to this Policy may be considered. In such cases, where the monograph title contains the specific salt form of the active moiety, the strength of the product or preparation is also expressed in terms of the specific salt form.

Labeling: The labels and labeling shall clearly state the specific salt form of the active moiety that is present in the product/preparation, as this information may be useful to practitioners and patients. The names and strengths of both the active moiety and specific salt form (where applicable) are provided in the labeling.

LABELS AND LABELING FOR INJECTABLE PRODUCTS

The labels[1] and the labeling state the following information:

- Name of the preparation
- In the case of a liquid preparation, the quantity or proportion of each active moiety and/or drug substance in a specified volume
- In the case of a compounded sterile preparation, the names and amounts or concentrations of active moiety and/or drug substance on the immediate container (see *Pharmaceutical Compounding—Sterile Preparations* ⟨797⟩, *Responsibility of Compounding Personnel*)
- In the case of a dry preparation or other preparation to which a diluent must be added before use, the quantity or proportion of each active moiety and/or drug substance, the final volume of solution or suspension, directions for proper storage of the constituted solution, and an expiration or beyond-use date (see the section *Expiration Date and Beyond-Use Date*)
- Route(s) of administration
- Name and proportion of all inactive ingredients except ingredients added to adjust the pH or to make the drug isotonic may be declared by name with a statement of their effect
- Statement of storage conditions
- Name and place of business of the manufacturer, or packer, or distributor
- Identifying lot number and expiration date
- "Rx only"
- The recommended or usual dosage.

The container shall be labeled so that a sufficient area of the container remains uncovered for its full length or circumference to permit inspection of the contents.

The lot number must be traceable to the complete manufacturing history of the specific package, including all manufacturing, filling, sterilizing, and labeling operations. If the individual monograph permits varying concentrations of active moiety

[1] If there are space limitations, see CFR § 201.10(i), 21 CFR § 610.60.

and/or drug substance in a large-volume injection (LVI), the concentration of each active moiety and/or drug substance named in the official title is stated as if it were part of the official title (e.g., *5% Dextrose Injection*, or *5% Dextrose* and *0.2% Sodium Chloride Injection*).

Injections that are intended for veterinary use only should be labeled to that effect.

Vaccine labeling is not included in this general chapter.

Strength and Total Volume for Single- and Multiple-Dose Injectable Drug Products

For single- and multiple-dose injectable drug products, the strength per total volume should be the primary and prominent expression on the principal display panel of the label, followed in close proximity by strength/mL enclosed by parentheses. For containers that hold a volume of less than 1 mL, the strength per fraction of a mL should be the only expression of strength. Strength per single mL should be expressed as mg/mL, not mg/1 mL. The following formats are acceptable for contents greater than 1 mL:

Total strength/total volume: 500 mg/10 mL
Strength/mL: 50 mg/mL
or
Total strength/total volume: 25,000 Units/5 mL
Strength/mL: 5000 Units/mL.

The following format is acceptable for contents less than 1 mL:

12.5 mg/0.625 mL

There are some exceptions to expressing strength per total volume. In certain cases, the primary and prominent expression of the total drug content per container would not be effective in preventing medication errors (e.g., insulin). Another example is the use of lidocaine (or similar drugs for local anesthesia where the product is ordered and administered by percentage (e.g., 1% or 2%). In such cases, the total strength should be expressed: for example, 1% can be expressed as

(100 mg/10 mL) or
(10 mg/mL).

Dry solids that must be reconstituted should follow the same format with the exception that only the total strength of the drug should be listed, not the strength/total volume or strength/mL.

Ratio Expression of Strength

Single-entity drug products that can also be expressed as a ratio, such as epinephrine, shall be labeled only in terms of strength/mL. A ratio expression such as 1:1000 is an unacceptable format for single-entity drug products.

Examples:

Epinephrine Injection, USP, 1:1000 shall be expressed as 1 mg/mL
Epinephrine Injection, USP, 1:10,000 shall be expressed as 0.1 mg/mL
Isoproterenol Hydrochloride Injection, USP, 1:5000 shall be expressed as 0.2 mg/mL
Neostigmine Methylsulfate Injection, 1:1000 shall be expressed as 1 mg/mL

When combined with a local anesthetic, the concentration of epinephrine will be expressed as a ratio.

Examples:

Lidocaine HCl 1% and Epinephrine 1:100,000 Injection, USP
Bupivacaine HCl 0.25% and Epinephrine 1:200,000 Injection, USP

Pharmacy Bulk Package

Where a container is offered as a Pharmacy Bulk Package, the label shall: (a) state prominently "Pharmacy Bulk Package—Not for direct infusion"; (b) contain or refer to information on proper techniques to help assure safe use of the product; and (c) bear a statement limiting the time frame in which the container may be used once it has been entered, provided it is held under labeled storage conditions (see *Packaging and Storage Requirements* ⟨659⟩).

Ferrules and Cap Overseals

Healthcare practitioners using injectable products must be able to easily see and act on labeling statements that convey important safety messages critical for the prevention of imminent life-threatening situations. These cautionary labeling statements must be simple, concise, and devoid of nonessential information. Products that do not require cautionary statements should be free of information, so that those with cautionary statements are immediately apparent. Accomplishing this requires a systematic approach to the labeling of injectable products, and one that ensures that the ferrule and cap overseal—an area of these products that is highly visible to practitioners as they use these medicines—is reserved for critical safety messages. Accordingly:

1. Only cautionary statements may appear on the top (circle) surface of the ferrule and cap overseal of a vial containing an injectable product. The cautionary statement should appear on both the ferrule and cap, but may appear solely on the ferrule if the cap overseal is transparent and the cautionary statement beneath the cap is readily legible. A cautionary statement is one intended to prevent an imminent life-threatening situation and may include instructional statements that provide potency or other safety-related instructions if warranted. Examples of such statements include, but are not limited to: "Warning—Paralyzing Agent" and "Dilute before Using." The cautionary statement should be printed in a contrasting color and should be clearly visible under ordinary conditions of use.
2. If no cautionary statement is necessary, the top surface of the vial, including the ferrule and cap overseal, must remain blank.
3. Other statements or features including, but not limited to, identifying numbers or letters, such as code numbers, lot numbers, company names, logos, or product names, etc., may appear on the side (skirt) surface of the ferrule on vials containing injectable products, but not on the top (circle) surface of the ferrule or cap overseal. The appearance of such statements or features on the skirt surface of the ferrule should not detract from, or interfere with, the cautionary statement on the top surface.

Potassium Chloride for Injection Concentrate

The use of a black closure system on a vial (e.g., a black cap overseal and a black ferrule to hold the elastomeric closure) or the use of a black band or series of bands above the constriction on an ampul is prohibited, except for Potassium Chloride for Injection Concentrate (see *Packaging and Storage Requirements* ⟨659⟩).

Neuromuscular Blocking and Paralyzing Agents

All injectable preparations of neuromuscular blocking agents and paralyzing agents must be packaged in vials with a cautionary statement printed on the ferrules and cap overseals. Both the container cap ferrule and the cap overseal must bear in black or white print (whichever provides the greatest color contrast with the ferrule or cap color) the words: "Warning: Paralyzing Agent" or "Paralyzing Agent" (depending on the size of the closure system). Alternatively, the overseal may be transparent and without words, allowing for visualization of the warning labeling on the closure ferrule.

Aluminum in Large-Volume Injections (LVIs), Small-Volume Injections (SVIs), and Pharmacy Bulk Packages (PBPs) Used in Total Parenteral Nutrition Therapy

1. The aluminum content of LVIs used in total parenteral nutrition (TPN) therapy must not exceed 25 mcg/L.
2. The package insert of LVIs used in TPN therapy must state that the drug product contains NMT 25 mcg of aluminum per L. This information must be contained in the *Precautions* section of the labeling of all LVIs used in TPN therapy.
3. If the maximum amount of aluminum in SVIs and PBPs is 25 mcg/L or less, instead of stating the exact amount of aluminum that each contains, as in paragraph (4), the immediate container label for SVIs and PBPs used in the preparation of TPN admixtures or formulations (with exceptions as noted below) may state: "Contains no more than 25 mcg/L of aluminum." If the SVI or PBP is a lyophilized powder, the immediate container label may state the following: "When reconstituted in accordance with the package insert instructions, the concentration of aluminum will be no more than 25 mcg/L."
4. The maximum level of aluminum at expiry must be stated on the immediate container label of all SVIs and PBPs used in the preparation of TPN admixtures or formulations. The aluminum content must be stated as follows: "Contains no more than ___ mcg/L of aluminum." The immediate container label of all SVIs and PBPs that are lyophilized powder used in the preparation of TPN solutions must contain the following statement: "When reconstituted in accordance with the package insert instructions, the concentration of aluminum will be no more than ___ mcg/L." This maximum amount of aluminum must be stated as the highest one of the following three levels:
   - The highest level for the batches produced during the past 3 years
   - The highest level for the latest five batches
   - The maximum level in terms of historical levels, but only until completion of production of the first five batches.

The package insert for all LVIs, SVIs, and PBPs used in the preparation of TPN admixtures or formulations shall contain the following statement in the *Warnings* section of the labeling:

WARNING: This product contains aluminum which may be toxic. Aluminum may reach toxic levels with prolonged parenteral administration if kidney function is impaired. Premature neonates are particularly at risk because of their kidneys, which are immature, and they require large amounts of calcium and phosphate solutions that contain aluminum. Research indicates that patients with impaired kidney function, including premature neonates, who receive parenteral levels of aluminum at greater than 4–5 mcg/kg/day, accumulate aluminum at levels associated with central nervous system and bone toxicity. Tissue loading may occur at even lower rates of administration.

LABELS AND LABELING FOR PRODUCTS AND OTHER CATEGORIES

The labels and labeling shall include the following information:

1. In the case of a liquid preparation, the percentage content of each active moiety and/or drug substance or the amount of each active moiety and/or drug substance in a specified volume, with the exception that the ingedients added to adjust to a given pH or to make the solution isotonic may be declared by name and a statement of their effect.
2. In the case of a compounded preparation, the labeling should indicate that "this is a compounded preparation" (see *Pharmaceutical Compounding—Nonsterile Preparations ⟨795⟩, Compounding Process, Criteria When Compounding Each Drug Preparation*).
3. In the case of a dry preparation or other preparation to which a diluent must be added before use, the amount of each active moiety and/or drug substance, the composition of recommended diluent(s) [the name(s) alone if the formula is specified in the individual monograph], the amount that will be used to attain a specific concentration of active moiety or drug substance, the final volume of solution, directions for proper storage of the constituted solution, and an expiration or beyond-use date (see the section *Expiration Date and Beyond-Use Date*).

Amount of Active Moiety and/or Drug Substance per Dosage Unit

The strength of a drug product is expressed on the container label in terms of micrograms, milligrams, grams, or percentage of the therapeutically active moiety or drug substance, whichever form is used in the title, unless otherwise indicated in an individual monograph. Both the active moiety and drug substance names and their equivalent amounts are then provided on the container label and in the labeling (see *Nomenclature* ⟨1121⟩, *Monograph Naming Policy for Salt Drug Substances in Drug Products and Compounded Preparations*).

Official articles in capsule, tablet, or other dosage forms shall be labeled to express the quantity of each active moiety and/or drug substance or recognized nutrient contained in each unit. Unit-dose oral solutions or suspensions (whether supplied as liquid preparations or as liquid preparations that are constituted from solids upon addition of a designated volume of a specific diluent) shall be labeled to express the quantity of each active moiety and/or drug substance or recognized nutrient delivered under the conditions prescribed in *Deliverable Volume* ⟨698⟩. Official drug products not in unit-dose packaging shall be labeled to show the quantity of each active moiety and/or drug substance in each milliliter or in each gram, or to express the percentage of each such ingredient (see *General Notices and Requirements 8.140, Percentage Concentrations*). Exceptions are oral liquids or solids intended to be constituted to yield oral liquids that, alternatively, can be labeled in terms of each 5-mL portion of the liquid or resulting liquid. Unless otherwise indicated in a monograph or chapter, declarations of strength or quantity shall be stated only in metric units [see also *General Notices and Requirements 5.50.10, Units of Potency (Biological)*].

Expiration Date and Beyond-Use Date

The label of an official drug product or nutritional or dietary supplement product shall bear an expiration date. All products shall display the expiration date so that it can be read by an ordinary individual under customary conditions of purchase and use. The expiration date shall be prominently displayed in high contrast to the background or it shall be sharply embossed, and easily understood (e.g., "EXP 6/13," "Exp. June 13," or "Expires 6/2013"). [NOTE—For additional information and guidance, refer to the Consumer Products Association's *Voluntary Codes and Guidelines of the Consumer Healthcare Products Industry*.]

The monographs for some preparations state how the labeled expiration date shall be determined. In the absence of a specific requirement in the individual monograph for a drug product or nutritional supplement, the label shall bear an expiration date assigned for the particular formulation and package of the product, with the following exceptions: the label need not show an expiration date if the drug product or nutritional supplement is packaged in a container that is intended for sale without prescription, and the labeling states no dosage limitations, and if the product or supplement is stable for NLT 3 years when stored under the prescribed conditions.

If an official product is required to bear an expiration date, the product shall be dispensed solely in or from a container labeled with an expiration date, and the date on which the article is dispensed shall be within the labeled expiry period. The expiration date identifies the time during which the article can be expected to meet the requirements of the compendial monograph, provided it is kept under the prescribed storage conditions. The expiration date limits the time during which the article may be dispensed or used. If an expiration date is stated only in terms of the month and the year, then the intended expiration date is the last day of the stated month.

The beyond-use date is the date after which a product shall not be used. The dispenser shall place on the label of the prescription container a suitable beyond-use date to limit the patient's use of the article based on any information supplied by the manufacturer or this subsection. The beyond-use date shall not be later than the expiration date on the manufacturer's container. Also see the section *Compounded Preparations* below.

For articles that require constitution before use, a suitable beyond-use date for the constituted product shall be identified in the labeling.

For all other dosage forms, in determining a beyond-use date the dispenser shall take into account, in addition to any other relevant factors:

- Nature of the drug
- Container in which it was packaged by the manufacturer and the expiration date thereon
- Characteristics of the patient's container, if the article is repackaged for dispensing
- Expected storage conditions to which the article may be exposed
- Unusual storage conditions to which the article may be exposed
- Expected length of the course of therapy.

After considering these factors, the dispenser shall label a container with a suitable beyond-use date to limit the patient's use of the article. Unless otherwise specified in the individual monograph or in the absence of stability data to the contrary, the beyond-use date shall be not later than: (a) the expiration date on the manufacturer's container; or (b) 1 year from the date the drug is dispensed, whichever is earlier. For nonsterile solid and liquid dosage forms that are packaged in single-unit and unit-dose containers, the beyond-use date shall be 1 year from the date the drug is packaged into the single-unit or unit-dose container or the expiration date on the manufacturer's container, whichever is earlier, unless stability data or the manufacturer's labeling indicates otherwise.

Compounded Preparations

The label on the container or package of an official compounded preparation shall bear a beyond-use date after which the compounded preparation should not be used. Beyond-use dates are assigned on the basis of criteria different from those applied to assigning expiration dates to manufactured drug products.

The label on the container package of an official compounded preparation shall include the word "compounded" after the drug name (e.g., Baclofen Compounded Oral Solution). Additionally, USP official compounded preparations for animal patients will include the word "veterinary" following the full official name (e.g., Atenolol Compounded Suspension, Veterinary).

Irrigation, Hemofiltration, and Dialysis

Flexible containers for injections that are intended for use as dialysis, hemofiltration, or irrigation solutions, and that contain a volume of more than 1 L, should be labeled to indicate that the contents are not intended for use by intravenous infusion.

Use of Leading and Terminal Zeros

To help minimize the possibility of errors in drug dispensing and administration, when the quantity of active moiety and/or drug substance is expressed in whole numbers it shall be shown without a decimal point followed by a terminal zero (e.g., express as 4 mg, not 4.0 mg). When the quantity of active moiety and/or drug substance is expressed as a decimal number smaller than 1, it shall be shown with a zero preceding the decimal point (e.g., express as 0.2 mg, not .2 mg).

Alcohol

The alcohol content in a liquid preparation shall be stated on the label as a percentage (v/v) of C_2H_5OH.

Botanicals

The label of an herb or other botanical intended for use as a dietary supplement shall bear the statement, "If you are pregnant or nursing a baby, seek the advice of a health professional before using this product."

Electrolytes

The concentration of electrolytes for replacement therapy (e.g., sodium, potassium, chloride) shall be stated on the label in milliequivalents (mEq)/volume. [NOTE—Phosphorus containing injections shall be expressed in milliMoles (e.g., mM/volume). The label of the product shall also indicate the quantity of ingredient(s) in terms of weight or percentage concentration.]

Non-Oral Products

A product intended for injection or topical use shall state the names of all added substances (see *General Notices and Requirements 5.20, Added Substances*).

Salts of Drugs

It is an established principle that official articles shall have only one official title (see *General Notices and Requirements 2.20* and compendial nomenclature requirements in *Nomenclature* ⟨1121⟩). For purposes of saving space on labels and because chemical symbols for the most common inorganic salts of drugs are well known to practitioners, the following alternatives are

permitted in labeling official articles that are salts: HCl for hydrochloride; HBr for hydrobromide; Na for sodium; and K for potassium. The symbols Na and K are intended for use in abbreviating names of the salts of organic acids, but these symbols are not used when the word Sodium or Potassium appears at the beginning of an official title (e.g., Phenobarbital Na is acceptable, but Na Salicylate is not).

Special Capsules and Tablets

The label of any form of Capsule or Tablet intended for administration other than by swallowing intact shall bear a prominent indication of the manner in which it should be used (see *Compendial Nomenclature, Nomenclature Guidelines* on the USP website at www.usp.org).

Products That Contain Vitamins

The vitamin content of an official drug product shall be stated on the label in metric units per dosage unit. The amounts of vitamins A, D, and E may also be stated in USP Units. Quantities of vitamin A declared in metric units refer to the equivalent amounts of retinol (vitamin A alcohol). The label of a nutritional supplement shall bear an identifying lot number, control number, or batch number.

Controlled Room Temperature

Articles may be labeled for storage at "controlled room temperature" or at "up to 25°", or other wording based on the same mean kinetic temperature (see *Packaging and Storage Requirements* ⟨659⟩).

Light-Resistant Container

When an opaque covering is used to provide protection from light for a light-sensitive product packaged in a clear or colorless or translucent container, the label of the container will bear a statement that the opaque covering is needed until the contents are to be used or administered (see *Containers—Performance Testing* ⟨671⟩, *Light Transmission Test* and *Packaging and Storage Requirements* ⟨659⟩).

Single-Unit Container

Each single-unit container shall be labeled to indicate the identity, quantity and/or strength, name of the manufacturer, lot number, and expiration date of the article (see *Packaging and Storage Requirements* ⟨659⟩).

Single-Dose Container

A single-dose container shall be labeled as such, and when space permits, should include on the label appropriate discard instructions (see *Packaging and Storage Requirements* ⟨659⟩).

Unit-of-Use Container

A unit-of-use container shall be labeled as such, without further modification except for the addition of appropriate labeling (see *Packaging and Storage Requirements* ⟨659⟩).

Protection from Freezing

The container label shall bear an appropriate instruction to protect the article from freezing if subject to loss of strength or potency, or to destructive alteration of its characteristics (see *Packaging and Storage Requirements* ⟨659⟩).

Prescription Container Labeling

At a minimum, a prescription container shall be labeled in a patient-centered manner. The label shall contain essential information that is important for the patient's safe and effective use of the medicine. Labels should be designed and formatted to optimize readability and understanding (see *Prescription Container Labeling* ⟨17⟩).

GENERAL LABELING

Users are reminded to always refer to the *General Notices and Requirements* in assessing or applying any compendial standards. *General Notices and Requirements* addresses a number of labeling-related aspects, including *3.20, Indicating Conformance* (when an article may be labeled *USP, NF*, or *USP–NF*, and requirements related to differences in identity, naming, strength, quality, or purity); *5.20.10, Added Substances, Excipients, and Ingredients in Official Substances*; *6.70, Reagents*; and *8.240, Weights and Measures* (e.g., microgram may be represented as either µg or mcg. For labeling or prescribing purposes, "mcg" is preferred).

⟨11⟩ USP REFERENCE STANDARDS

Reference Standards provided by the United States Pharmacopeial Convention (USP Reference Standards, or RS) are highly characterized specimens reflective of specified drugs and foods (drug substances, biologics, excipients, dietary supplements, food ingredients, impurities, degradation products, reagents, and performance verification standards). When approved as suitable for use as comparison standards for documentary tests or assays (i.e., as a monograph component) in the *United States Pharmacopeia (USP)* or *National Formulary (NF)*, USP RS also assume official status and legal recognition in the United States. Assessment of the suitability for use in other applications rests with the user. Official USP RS are primary standards in jurisdictions that so recognize them as such and, when appropriate, are calibrated relative to international reference materials such as those provided by the World Health Organization. USP RS are never intended for therapeutic use. USP's RS are provided for legal metrology purposes and can help ensure comparability of results and traceability to Système International d'Unités (SI) units whether certified or not. USP RS are Reference Materials as defined in the *International Vocabulary of Metrology—Basic and General Concepts and Associated Terms (VIM)*: 3rd Edition 2007.

General Chapters

TYPES OF REFERENCE STANDARDS

Reference Standards for *USP* or *NF* Articles

Reference Standards for official articles in *USP* or *NF* are provided as pure materials or as mixtures of chemicals reflective of the corresponding drug substances or excipients. The use of these materials is specified in the article's monograph, and these materials generally are necessary for use in the *Assay* and/or the *Identification* tests. The suitability of a USP RS for uses outside those specified in a monograph is the responsibility of the user. The property value or calculation value of the Reference Standard is stated on the label and should be included in calculations used in the monograph and applicable general chapters. For Reference Standards that do not bear a property value or calculation value on the label or in accompanying documentation, assume the Reference Standard is 100.0% pure for compendial quantitative applications.

Impurity Reference Standards

Reference Standards for impurities may include the following:

- Organic impurities that may arise either during the manufacturing process or during the shelf-life storage of an article and may include starting materials, intermediates, by-products, reagents, catalysts, and/or degradation products.
- Inorganic impurities that normally result from a synthesis process and may include reagents, catalysts, heavy metals, or inorganic salts
- Residual solvents that may be either inorganic or organic liquids that are used to prepare solutions or suspensions during the synthesis of an article

Impurity Reference Standards may be presented as purified single-component materials or as mixtures of more than one impurity. Other options for controlling impurities may include presenting the official article with a labeled impurity content; using relative chromatographic retention times and response factors; or providing theoretical values such as UV absorptivities at selected wavelengths.

In earlier editions of the compendium, impurities were designated by their chemical names. For ease of indexing and searching, these have been gradually replaced with the designation "X related compound Y RS", where X is the name of the official article, and Y is a sequential alphabetical letter. The assignment of this letter does not necessarily match the naming schemes of other compendia. Reference Standard impurity mixtures may also be designated by their intended use, such as "X System Suitability RS". The conventional names and the chemical names are reproduced in the catalog and on the RS product label.

Certified Reference Materials

USP's Certified Reference Materials (CRMs) are Reference Standards that provide certified property values with associated uncertainties and metrological traceability, in accordance with International Organization for Standardization (ISO) Guides 30–35. Correct use of these CRMs support traceability of results to SI units and comparability of procedures.

USP Reference Standards for Biologicals

USP provides RS for biologic drugs and ancillary materials. For historical and other reasons, and as noted in Section 5.50.10 *Units of Potency (Biological)* in the *General Notices and Requirements*, USP RS for biologicals may diverge in unitage, by definition, or otherwise from other internationally recognized standards. Unless so noted in the documentary standard, international reference standards generally are not interchangeable and the USP RS is required in the tests and assays of *USP–NF*.

NF Reference Standards

Reference Standards currently labeled as "NF Reference Standards" are intended to be designated and labeled as "USP Reference Standards" pursuant to the consolidation of *USP* and *NF* within the USP as of January 2, 1975. Where a USP Reference Standard is called for, the corresponding substance labeled as an "NF Reference Standard" may be used.

Transition of Authentic Substances to USP Reference Standards

Previously, highly characterized reference materials not required for use in a *USP–NF* monograph or general chapter were developed by USP as a service and were distributed as Authentic Substances (AS). AS typically are highly characterized chemicals that are collaboratively tested and made available as a service primarily to analytical, clinical, pharmaceutical, and research laboratories. Such materials may be used for identification, method development, evaluation of method performance, or other applications as found suitable and validated by the user. USP will no longer introduce materials labeled "Authentic Substances." All reference materials released, whether or not required for use in a *USP–NF* monograph or general chapter, will be "USP Reference Standards."

Authentic Visual References

Authentic Visual References are USP Reference Standards, but unlike chemical reference materials, Authentic Visual References (AVR) are not used in chemical analyses. Instead, AVR are visual images used by analysts to compare certain test articles to ensure that they meet compendial requirements. AVR are incorporated by reference into the monograph.

USP Performance Verification Test Standards

These materials are provided to analyze and where appropriate to facilitate adjustment of the operation of an instrument to ensure that the results obtained are accurate and/or precise or otherwise give acceptable results. The use of these Reference Standards is generally described in associated general test chapters and allied information.

APPLICATIONS OF USP REFERENCE STANDARDS

Official applications of USP RS are specified in *USP–NF* monographs and general chapters. They include the following:

- quantitative uses in assays for drug substances and formulations, limit tests, or blanks and controls
- qualitative uses, (e.g., identification tests, system suitability tests, or chromatographic peak markers)
- method-specific uses, (e.g., performance verification standards, AVR, melting point standards, and the particle count set)

As described above, USP also provides Authentic Substances, not specified for use in a *USP* monograph or general chapter, which are used at the user's discretion.

PACKAGING

The amount of material per individual USP RS container depends on the compendial application of the standard and is generally sufficient for several replicates. Some standards (mainly materials with significant handling requirements or materials that are available only in small amounts) are provided in single-use containers. Such single-use products generally are lyophilized, and their content is labeled in mass or activity units per container. If so labeled, the content of the container should be reconstituted in its entirety without any additional weighing. Instructions for reconstitution are given either on the label or in the monographs where the standard is used.

LABELING

The label text provides all the information needed for the correct storage and use of the USP RS in monograph applications. The label includes directions for use, safety warnings, required information for controlled substances, and a property value or calculation value for standards with quantitative applications. For performance verification standards, acceptance ranges are provided. Where necessary, USP RS are accompanied by additional documentation such as Technical Data Sheets or Typical Chromatograms.

Unless otherwise directed in the procedure in the individual monograph or in a general chapter, USP RS should be used in accordance with the instructions on the label of the Reference Standard. Material Safety Data Sheets for all USP reference materials are available on the USP Web site.

Although USP RS undergo retesting on a predefined schedule to determine continued suitability for use, USP RS do not carry an expiration date on the label. A lot of USP RS may be used in its official applications as long as it is listed as "Current Lot" in the current USP Reference Standards Catalog or has not reached its Valid Use Date. Upon depletion, the lot is designated in the catalog as "Previous Lot" and a "Valid Use Date" is assigned. USP publishes the Catalog of Reference Standards bimonthly. The most current version of the catalog can be found on the USP Web site at www.usp.org. The user is responsible for ascertaining before use that the USP RS lot of interest currently carries official status, either as a "Current Lot" or as a "Previous Lot" within the Valid Use Date.

PROPER USE

Many compendial tests and assays are based on comparison of a test specimen with a USP RS. In such cases, measurements are made on preparations of both the test specimen and the Reference Standard. Where it is directed that a Standard solution or a Standard preparation be prepared for a quantitative determination by stepwise dilution or otherwise, it is intended that the Reference Standard substance be accurately weighed (see *Balances* ⟨41⟩ and *Volumetric Apparatus* ⟨31⟩). Due account should also be taken of the potential errors associated with weighing small masses (see also Section 6.50.20.1 *Adjustments to Solutions* in the *General Notices and Requirements*). Reference Standards that are defined on a content-per-container basis are an exception, as noted above.

USP RS instructions for use include the following:

- **As Is:** Use without any prior treatment or correction for volatiles. This is the preferred option, and is selected whenever valid data indicate that the volatiles content is constant over time.
- **Dry Before Use:** Use immediately after drying under stated conditions. Drying should not be performed in the original container. A portion of the material should be transferred to a separate drying vessel.
- **Determine Water Content Titrimetrically At Time of Use:** Use with a correction for the water content or the loss on drying, determined on a separate portion of material. Where the titrimetric determination of water is required at the time a Reference Standard is to be used, proceed as directed for *Method I* under *Water Determination* ⟨921⟩. Instrumental or microanalytical methods are acceptable for this purpose. When using typical amounts (about 50 mg of the Reference Standard), titrate with a 2- to 5-fold dilution of the reagent. Where the determination of the loss on drying on a separate portion of USP RS is required, proceed as directed on the label. Sample sizes smaller than those required in the general test chapter *Loss on Drying* ⟨731⟩ may be used for a USP RS provided that the user can obtain a sufficiently accurate result.

Whenever the labeled directions for use require drying or a correction for volatiles, it should be performed at the time of use. Further experimental details should be controlled by the user's Standard Operating Procedures and good laboratory practices.

STORAGE

USP RS should be stored in the packaging configuration provided by USP (e.g., vials that are packaged in hermetically sealed bags). When special storage conditions are specified, label directions should be followed. Unopened vials should be stored as indicated on the label. The user is responsible for ensuring that the contents of opened vials continue to be suitable for their intended use and that value assignment and uncertainty information are maintained.

Apparatus for Tests and Assays

⟨17⟩ PRESCRIPTION CONTAINER LABELING

INTRODUCTION

This chapter applies to labeling instructions and information on prescription containers that are directly dispensed to the patient to promote better patient understanding. These standards do not apply when a prescription drug will be administered to a patient by licensed personnel who are acting within their scope of practice. Medication misuse has resulted in more than 1 million adverse drug events per year in the United States. Patients' best source (and often only source) of information regarding the medications they have been prescribed is on the prescription container label. Although other written information and oral counseling may be available, the prescription container label must fulfill the professional obligations of the prescriber and pharmacist. These obligations include giving patients the essential information they will need to understand how to safely and appropriately use the medication and how to adhere to the prescribed medication regimen.

Inadequate understanding of prescription directions for use and auxiliary information provided on dispensed containers is widespread. Studies have found that 46% of patients misunderstood one or more dosage instructions, and 56% misunderstood one or more auxiliary warnings. The problem of misunderstanding is particularly common and troublesome in patients with low or marginal literacy and in patients receiving multiple medications that are scheduled for administration using complex, nonstandardized time periods. In one study, patients with low literacy were 34 times more likely to misinterpret prescription medication warning labels than patients with adequate literacy. However, even patients with adequate literacy often misunderstand common prescription directions and warnings. In addition, there is great variability in the actual auxiliary warning and supplemental instructional information that have been applied by individual practitioners to the same prescription. The specific evidence to support a given auxiliary statement often is unclear, and patients often ignore such information. The need for auxiliary label information requires further study in comparison to explicit, simplified language alone.

Lack of universal standards for labeling on dispensed prescription containers is a root cause of patient misunderstanding, nonadherence, and medication errors.

USP developed patient-centered label standards for the format, appearance, content, and language of prescription medication instructions to promote patient understanding. These recommendations form the basis of this general chapter.

PRESCRIPTION CONTAINER LABEL STANDARDS TO PROMOTE PATIENT UNDERSTANDING

Organize the Prescription Label in a Patient-Centered Manner

Information shall be organized in a way that best reflects how most patients seek out and understand medication instructions. Prescription container labeling should feature only the most important patient information needed for safe and effective understanding and use.

Emphasize Instructions and Other Information Important to Patients

Prominently display information that is critical for the patient's safe and effective use of the medicine. At the top of the label, specify the patient's name, the drug name (spell out full generic and brand name) and drug strength, and explicit clear directions for use in simple language.

The prescription directions should follow a standard format so that the patient can expect that each element will be presented in a specific, predictable order each time a prescription is received. Use of a methodology that simplifies the administration instructions for the patient's medication should improve the individual's ability to understand prescription instructions, to take the correct dose, and to organize multi-drug regimens. Employing best practices of patient-centered instructions—which utilize the principles of health literacy, medication therapy management, and education, to explicitly describe how to take daily-use, solid dose-form medications—has resulted in improved patient understanding. One such patient-centered method is the universal medication schedule (UMS). The UMS shifts medication-taking into four standardized time periods (morning, noon, evening, bedtime) and uses simplified language and formatting to promote understanding (e.g., "take 1 pill in the morning and 1 pill at bedtime" rather than "take one tablet twice daily"). Such methods may be particularly useful for simplifying daily medication regimens that include multiple oral therapies. [Note—The word "pill" is used in the UMS to enhance health literacy and may not reflect a USP definition for an oral dosage form (see *Compendial Nomenclature, USP Nomenclature Guidelines* on the USP website at www.usp.org/usp-nf/development-process).]

When oral liquid dosage forms are prescribed, the appropriate dosing component (e.g., oral syringe, dosing cup) shall be provided to the patient or caregiver to accurately measure and administer the oral medication. The graduations on the com-

ponent shall be legible and indelible, and the associated volume markings shall be in metric units and limited to a single measurement scale that corresponds with the dose instructions on the prescription container label (see *Packaging and Storage Requirements* ⟨659⟩).

Other, less-critical but important content (e.g., pharmacy name and phone number, prescriber name, fill date, refill information, expiration date, prescription number, drug quantity, physical description, and evidence-based auxiliary information) should not supersede critical patient information. Such less-critical information should be placed away from dosing instructions (e.g., at the bottom of the label or in another less prominent location) because it can distract patients, which can impair their recognition and understanding.

Simplify Language

The language on the label should be clear, simplified, concise, and familiar, and should be used in a standardized manner. Only common terms and sentences should be used. Do not use unfamiliar words (including Latin terms) or medical jargon.

Use of readability formulas and software is not recommended for simplifying short excerpts of text such as those on prescription labels. Instead, use simplified, standardized sentences that were developed by seeking feedback from samples of diverse consumers. Such language will promote correct understanding of the instructions.

Give Explicit Instructions

Instructions for use (i.e., the SIG or signatur) should clearly separate the dose itself from the timing of each dose in order to explicitly convey the number of dosage units to be taken and when (e.g., specific time periods each day such as morning, noon, evening, and bedtime). Instructions shall include specifics on time periods. Do not use alphabetic characters for numbers. For example, write "Take 2 tablets in the morning and 2 tablets in the evening" rather than "Take two tablets twice daily").

Whenever available, use standardized directions (e.g., write "Take 1 tablet in the morning and 1 tablet in the evening" if the prescription reads b.i.d.). Vague instructions based on dosing intervals such as twice daily or 3 times daily, or hourly intervals such as every 12 hours, generally should be avoided because such instructions are implicit rather than explicit, they may involve numeracy skills, and patient interpretation may differ from prescriber intent. Although instructions that use specific hourly times (e.g., 8 a.m. and 10 p.m.) may seem to be more easily understood than implicit vague instructions, recommending dosing at precise hours of the day is less readily understood and may present greater adherence issues (due to individual lifestyle patterns such as shift work) than more general time frames such as in the morning, in the evening, after breakfast, with lunch, or at bedtime. Consistent use of the same terms should help avoid patient confusion. A set of standardized, explicit instructions (the universal medication schedule, UMS) were developed and tested in English and other languages to improve patient understanding.[1]

Ambiguous directions such as "take as directed" should be avoided unless clear and unambiguous supplemental instructions and counseling are provided (e.g., directions for use that will not fit on the prescription container label). A clear statement referring the patient to such supplemental materials should be included on the container label.

Include Purpose for Use

If the purpose of the medication is included on the prescription, it should be included on the prescription container label unless the patient prefers that it not appear. Practitioners should always ask patients their preference when writing the prescription. Confidentiality and FDA approval for intended use (e.g., labeled versus off-label use) may limit inclusion of the purpose on labels. Current evidence supports inclusion of purpose-for-use language in clear, simple terms (e.g., "for high blood pressure" rather than "for hypertension").

Limit Auxiliary Information

Auxiliary information on the prescription container label should be evidence-based and presented in simple explicit language that is minimized to avoid distracting patients with nonessential information. Most patients, particularly those with limited literacy, pay little attention to auxiliary information. The information should be presented in a standardized manner and should be critical for patient understanding and safe medication use (e.g., warnings and critical administration alerts). Icons are frequently misunderstood by patients. In addition, icons that provide abstract imagery for messages that are difficult to depict visually may be ineffective at improving understanding compared with simplified text alone. Use only icons for which there is adequate evidence, through consumer testing, that they improve patient understanding about correct use. Evidence-based auxiliary information, both text and icons, should be standardized so that it is applied consistently and does not depend on individual practitioner choice.

[1] Explicit and Standardized Prescription Medicine Instructions. December 2014. Agency for Healthcare Research and Quality, Rockville, MD. http://www.ahrq.gov/professionals/quality-patient-safety/pharmhealthlit/prescriptionmed-instr.html.

Address Limited English Proficiency

Whenever possible, the directions for use on a prescription container label should be provided in the patient's preferred language. Otherwise there is a risk of misinterpretation of instructions by patients with limited English proficiency, which could lead to medication errors and adverse health outcomes. Additionally, whenever possible, directions for use should appear in English as well, to facilitate counseling; the drug name(s) shall be in English so that emergency personnel and other intermediaries can have quick access to the information. Standardized translations of universal medication schedule instructions are available.[2]

Translations of prescription medication labels should be produced using a high-quality translation process. An example of a high-quality translation process is:

- Translation by a trained translator who is a native speaker of the target language
- Review of the translation by a second trained translator and reconciliation of any differences
- Review of the translation by a pharmacist who is a native speaker of the target language and reconciliation of any differences
- Testing of comprehension with target audience

If a high-quality translation process cannot be provided, labels should be printed in English, with the use of trained interpreter services whenever possible to ensure patient comprehension. The use of computer-generated translations should be limited to programs with demonstrated quality because dosage instructions can be translated inconsistently or incorrectly, which is potentially hazardous. Standardized translated instructions and technology advances are needed to ensure the accuracy and safety of prescription container labeling for patients with limited English proficiency.

Improve Readability

Labels should be designed and formatted so they are easy to read. Currently, no strong evidence supports the superiority, in terms of legibility, of serif versus sans serif typefaces, therefore simple uncondensed fonts of either type can be used.

Optimize typography by using the following techniques:

- High-contrast print (e.g., black print on white background)
- Simple, uncondensed familiar fonts with sufficient space within letters and between letters (e.g., Times New Roman or Arial)
- Sentence case (i.e., punctuated like a sentence in English: Initial capital letter followed by lower-case words except proper nouns)
- Large font size (e.g., minimum 12-point Times New Roman or 11-point Arial) for critical information. Note that point size is not the actual size of the letter, so two fonts with the same nominal point size can have different actual letter sizes The height of the typeface, x-height, has been used as a more accurate indicator of apparent size than point size. For example, for a given point size, the x-height and apparent size of Arial are actually bigger than those for Times New Roman. Do not use type smaller than 10-point Times New Roman or the equivalent size in another font. Older adults, in particular, have difficulty reading small print.
- Adequate white space between lines of text (25%–30% of the point size)
- White space to separate sections on the label such as directions for use versus pharmacy information
- Horizontal text only

Other measures that can also improve readability:

- Minimize the need to turn the container in order to read lines of text
- Never truncate or abbreviate critical information
- Use highlighting, bolding, and other cues to preserve readability (e.g., high-contrast print and light color for highlighting) and emphasize patient-centered information or information that facilitates adherence (e.g., refill ordering)
- Limit the number of colors used for highlighting (i.e., no more than two)
- Use of separate lines to distinguish when each dose should be taken

Alternative-Access Methods to Address Visual Impairment

Patients with visual impairment who are unable to read printed prescription container labels often report inadvertently taking the wrong medication or amount, or taking it at the wrong time or under the wrong instructions, compromising their own safety. Similarly, if a caregiver is visually impaired, the patient they care for is at risk for medication errors. The magnitude of this problem increases with aging, as the risk of visual impairment and the number of prescribed medications both increase with age.

- Follow standards for patient-centered prescription labels

[2] Available at http://www.ahrq.gov/professionals/quality-patient-safety/pharmhealthlit/prescriptionmed-instr.html.

- Provide alternative access for visually impaired patients (alternative-access methods include tactile, auditory, or enhanced visual systems that may employ advanced mechanics of assistive technology)[3]
- Enhance communication between the pharmacist and visually impaired patients (and their designated representatives) such that the pharmacist can explain alternative-access options and together they can identify those best suited to the patient's needs
- Once an alternative-access method is identified for the individual patient, the pharmacist shall provide the service or direct the patient to a pharmacy that offers that type of alternative access
- Ensure that duplicate accessible labels preserve the integrity of the print prescription drug container label and provide the same sequence of information as the printed label
- Follow specific best practices for each respective alternative-access format employed

⟨31⟩ VOLUMETRIC APPARATUS

Most of the volumetric apparatus available in the United States is calibrated at 20°, although the temperatures generally prevailing in laboratories more nearly approach 25°. To minimize volumetric error, the temperature should be the same for the volumetric apparatus, the material being prepared, the solvents being used to prepare the volumetric solutions, the area in which they are prepared, and the final volume adjustment.

USE

To attain the degree of precision required in many Pharmacopeial assays involving volumetric measurements and directing that a quantity be "accurately measured", the apparatus must be chosen and used with care. A buret should be of such size that the titrant volume represents not less than 30% of the nominal volume. Where less than 10 mL of titrant is to be measured, a 10-mL buret or a microburet generally is required.

STANDARDS OF ACCURACY

The capacity tolerances for volumetric flasks, transfer pipets, and burets are those accepted by the National Institute of Standards and Technology (Class A),[1] as indicated in *Table 1*, *Table 2*, and *Table 3*, respectively. [NOTE—The tables in this chapter list the tolerances for the most commonly used sizes. See the referenced ASTM standards for a complete list of tolerances and other applicable criteria.] Use Class A volumetric apparatus unless otherwise specified in the individual monograph. When plastic volumetric apparatus is specified, the accepted capacity tolerances are equal to Class B glass.[2]

The capacity tolerances for measuring (i.e., "graduated") pipets of up to and including 10-mL capacity are somewhat larger than those for the corresponding sizes of transfer pipets, namely, 10, 20, and 30 µL for the 2-, 5-, and 10-mL sizes, respectively.

Transfer and measuring pipets calibrated "to deliver" should be drained in a vertical position and then touched against the wall of the receiving vessel to drain the tips. Volume readings on burets should be estimated to the nearest 0.01 mL for 25- and 50-mL burets and to the nearest 0.005 mL for 5- and 10-mL burets. Pipets calibrated "to contain" are called for in special cases, generally for measuring viscous fluids such as syrups; however, a volumetric flask may be substituted for a "to contain" pipet. In such cases, the pipet or flask should be washed clean after draining, and the washings should be added to the measured portion.

Table 1. Volumetric Flasks

Designated volume, mL	10	25	50	100	250	500	1000
Limit of error, mL	0.02	0.03	0.05	0.08	0.12	0.20	0.30
Limit of error, %	0.20	0.12	0.10	0.08	0.05	0.04	0.03

Table 2. Transfer Pipets

Designated volume, mL	1	2	5	10	25	50	100
Limit of error, mL	0.006	0.006	0.01	0.02	0.03	0.05	0.08
Limit of error, %	0.60	0.30	0.20	0.20	0.12	0.10	0.08

[3] See Working Group Recommendations from Access Board Working Group on Accessible Prescription Drug Container Labels: http://www.access-board.gov/guidelines-and-standards/health-care/about-prescription-drug-container-labels/working-group-recommendations.

[1] See ASTM 288-06, ASTM E287-02, ASTM E1189-00, and ASTM E969-02.

[2] See ASTM E288 and ISO Standard 384.

Table 3. Burets

Designated volume, mL	10 ("micro" type)	25	50
Subdivisions, mL	0.02	0.1	0.1
Limit of error, mL	0.02	0.03	0.05

⟨41⟩ BALANCES

This chapter states the requirements for balances used for materials that must be accurately weighed (see *General Notices and Requirements, 8.20*). Unless otherwise specified, when substances must be "accurately weighed," the weighing shall be performed using a balance that is calibrated over the operating range and meets the requirements defined for repeatability and accuracy. For balances used for other applications, the balance repeatability and accuracy should be commensurate with the requirements for its use.

For a discussion of the theoretical basis of these requirements, see *Weighing on an Analytical Balance* ⟨1251⟩, which may be a helpful—but not mandatory—resource.

REPEATABILITY

Repeatability is assessed by weighing one test weight NLT 10 times. [NOTE—The test weight must be within the balance's operating range, but the weight need not be calibrated. Because the standard deviation is virtually independent of sample mass within the balance's capacity, use of a small test weight, which may be difficult to handle, is not required.]

Repeatability is satisfactory if two times the standard deviation of the weighed value, divided by the desired smallest net weight (i.e., smallest net weight that the users plan to use on that balance), does not exceed 0.10%. If the standard deviation obtained is less than $0.41d$, where d is the scale interval, replace this standard deviation with $0.41d$. In this case, repeatability is satisfactory if $2 \times 0.41d$, divided by the desired smallest net weight, does not exceed 0.10%.

ACCURACY

The accuracy of a balance is satisfactory if its weighing value, when tested with a suitable weight(s), is within 0.10% of the test weight value.

A test weight is suitable if it has a mass between 5% and 100% of the balance's capacity. The test weight's maximum permissible error (mpe), or alternatively its calibration uncertainty, shall be NMT one-third of the applied test limit of the accuracy test. [NOTE—Applicable standards are the following: ASTM E617 (available from http://www.astm.org) and OIML R 111 (available from http://www.oiml.org).]

Microbiological Tests

⟨51⟩ ANTIMICROBIAL EFFECTIVENESS TESTING

INTRODUCTION

Antimicrobial preservatives are substances added to aqueous pharmaceutical products. Nonsterile dosage forms may have preservatives added to protect them from growth of microorganisms inadvertently introduced during or subsequent to the manufacturing process. In the case of sterile articles packaged in multiple-dose containers, antimicrobial preservatives are added to inhibit the growth of microorganisms that may be introduced from repeatedly withdrawing individual doses. One or more antimicrobial preservative(s) are expected in all sterile multidose units.

Antimicrobial preservatives should not be used as a substitute for good manufacturing practices, solely to reduce the viable microbial population of a nonsterile product, or control the presterilization bioburden of a multidose formulation during manufacturing. Antimicrobial preservatives in compendial dosage forms meet the requirements for *5.20 Added Substances* in *General Notices and Requirements*.

All useful antimicrobial agents are toxic substances. For maximum protection of patients, the concentration of the preservative shown to be effective in the final packaged product should be below a level that may be toxic to human beings based on the recommended dosage of the medicinal product.

The concentration of an added antimicrobial preservative can be kept to a minimum if the active ingredients of the formulation possess an intrinsic antimicrobial activity. Antimicrobial effectiveness, whether inherent in the product or produced because of the addition of an antimicrobial preservative, must be demonstrated for all injections packaged in multiple-dose containers or for other products containing antimicrobial preservatives. Antimicrobial effectiveness must be demonstrated for aqueous-based, multiple-dose topical and oral dosage forms and for other dosage forms such as ophthalmic, otic, nasal, irrigation, and dialysis fluids (see *Pharmaceutical Dosage Forms* ⟨1151⟩). For the purpose of the test, aqueous is defined as a water activity of more than 0.6 (see *Application of Water Activity Determination to Nonsterile Pharmaceutical Products* ⟨1112⟩).

Challenge organisms are generally based on likely contaminants to a drug product while considering its physical attributes, formulation, and intended use. The standard battery of challenge organisms described in this test need not prevent the inclusion of other species of microorganisms if deemed useful to measure the biological activity of the preservative system for a specific product. These supplemental challenge organisms are not within the scope of this chapter, but may be added in addition to the described test organisms.

GENERAL PROCEDURES

This chapter provides procedures to demonstrate the effectiveness of added antimicrobial preservatives. Such antimicrobial preservatives must be declared on the label. The procedures and acceptance criteria for effectiveness apply to a product in the original, sealed container in which it was distributed by the manufacturer (see *Table 1* for categories of products). The test need not be conducted in these containers, but care should be taken to avoid using materials that can interact with the preservative in the containers that are used for antimicrobial effectiveness testing.

Growth Promotion Procedure and Suitability of the Recovery Method

GENERAL CONSIDERATIONS

The ability of the procedure to detect challenge microorganisms in the presence of a suitably neutralized product to be tested must be established. The suitability of the procedure must be reconfirmed if a change is made in materials or methods or if a change is made in the product or direct product contact materials that may affect the outcome of the test.

The growth-promoting capabilities of media used in this procedure must be established.

PREPARATION OF TEST STRAINS

Use standardized suspensions of test strains or prepare as stated below. Seed-lot culture maintenance techniques (seed-lot systems) are used so that the viable microorganisms used for inoculation are NMT five passages removed from the original master seed lot. Grow each of the bacterial and fungal test strains separately (see *Table 2*).

Use cultures of the following microorganisms:[1] *Candida albicans* (ATCC No. 10231), *Aspergillus brasiliensis* (ATCC No. 16404), *Escherichia coli* (ATCC No. 8739), *Pseudomonas aeruginosa* (ATCC No. 9027), and *Staphylococcus aureus* (ATCC No. 6538). The viable microorganisms used in the procedure should be part of a freshly growing culture (e.g., in logarithmic growth phase) with the exception of *A. brasiliensis* spores. The culture conditions for the inoculum culture are described (see *Table 2*) in which the suitable media are Soybean–Casein Digest or Sabouraud Dextrose Agar Medium.

To harvest the bacterial and *C. albicans* cultures, use sterile saline TS to wash the surface growth, and collect it in a suitable vessel. To harvest the spores of *A. brasiliensis,* use sterile saline TS containing 0.05% of polysorbate 80. The spore suspension should be aseptically treated (e.g., filtration through sterile glass wool) to remove hyphae. All microbial suspensions should be prepared to ensure that there is no carry over of residual growth medium from the inoculum (e.g., centrifugation followed by resuspension in appropriate sterile suspending fluid.)

Alternatively, the stock culture organisms may be grown in a suitable liquid medium (i.e., Soybean–Casein Digest Broth or Sabouraud Dextrose Broth) and the cells harvested by centrifugation, then washed and resuspended in appropriate sterile suspending fluid. The microbial suspensions used for inoculations should be adjusted to obtain a microbial count of about 1×10^8 cfu/mL. Use the bacterial and yeast suspensions within 2 h, or within 24 h if stored between 2° and 8°. A stable spore suspension can be prepared and then may be maintained at 2°–8° for up to 7 days. [NOTE—The estimate of inoculum concentration may be obtained by turbidimetric procedures for the challenge microorganisms and later confirmed by plate count.]

---

[1] Available from American Type Culture Collection, 10801 University Boulevard, Manassas, VA 20110-2209 (http://www.atcc.org).

GROWTH PROMOTION OF THE MEDIA

Media used in this procedure must be capable of supporting microbial growth. Test each batch of ready-prepared medium and each batch of medium prepared either from dehydrated medium or from the ingredients described.

For solid media, counts obtained must be at least 50% of the calculated value for a standardized inoculum. For a freshly prepared inoculum, growth of the microorganisms occurs comparable to that previously obtained with a previously tested and approved batch of medium.

Suitability of the Counting Method in the Presence of Product

Prepare a 10^{-1} dilution by adding 1 mL of product (by volume) to 9 mL of saline or other neutralizing diluent. Continue this dilution scheme to 10^{-2} and 10^{-3} dilution levels. Add an appropriate number of challenge organisms to each tube of diluted product, mix, and then plate a suitable volume from each dilution to yield less than 250 cfu/plate for bacteria and yeast (ideally between 25 and 250 cfu) or less than 80 cfu/plate for *A. brasiliensis* (ideally between 8 and 80 cfu). This plating should be performed minimally in duplicate (although a greater number of replicates can be useful to minimize variability in the plate count estimate). A positive control for this procedure is to introduce the same inocula into saline, and transfer similar volumes of saline to agar plates. A suitable recovery scheme is the one that provides at least 50% of this saline control count (averaged).

If the diluted product exhibits antimicrobial properties, specific neutralizers may need to be incorporated into the diluents or the recovery media. See *Validation of Microbial Recovery from Pharmacopeial Articles* ⟨1227⟩ for more information.

The ability of the procedure to measure preservative efficacy may be compromised if the method suitability requires significant dilution (10^{-2} or 10^{-3}) as this will affect the measured recovery (e.g., it may be difficult to measure a 3 log unit reduction for a 10^5–10^6 inoculum). If no suitable neutralizing agent or method is found and method suitability requires significant dilution, a higher level of inoculum (e.g., 10^7–10^8) may be used so that a 3 log unit reduction can be measured. Reported recovery cannot be less than 1 cfu/plate on average (or 100 cfu/mL if 1 mL is plated in duplicate at the 10^{-2} dilution).

Membrane filtration may be used to filter larger volumes of dilutions to overcome this difficulty or to assist in the neutralization of antimicrobial properties.

Testing of Products

PRODUCT CATEGORIES

For the purpose of testing, compendial articles have been divided into four categories (see *Table 1*). The criteria of antimicrobial effectiveness for these products are a function of the route of administration. It is expected that formulations containing preservatives will meet minimal efficacy standards, whether packaged as multidoses or unit doses.

Table 1. Compendial Product Categories

Category	Product Description
1	Injections; other parenterals including emulsions, otic products, sterile nasal products, and ophthalmic products made with aqueous bases or vehicles
2	Topically used products made with aqueous bases or vehicles; nonsterile nasal products and emulsions, including those applied to mucous membranes
3	Oral products other than antacids, made with aqueous bases or vehicles
4	Antacids made with an aqueous base

PROCEDURE

The procedure can be conducted either in five original containers if a sufficient volume of product is available in each container and if the product container can be entered aseptically (i.e., needle and syringe through an elastomeric rubber stopper), or in five sterile, capped bacteriological containers [inert relative to the antimicrobial agent(s)] of suitable size into which a sufficient volume of product has been transferred. Inoculate each container with one of the prepared and standardized inocula, and mix. The volume of the suspension inoculum used is between 0.5% and 1.0% of the volume of the product to minimize potential effects on the product. The concentration of test microorganisms that is added to the product (*Category 1, 2,* or *3*) is such that the final concentration of the test preparation after inoculation is between 1×10^5 and 1×10^6 cfu/mL of the product. For *Category 4* products (antacids), the final concentration of the test preparation after inoculation is between 1×10^3 and 1×10^4 cfu/mL of the product.

The initial concentration of viable microorganisms in each test preparation is estimated based on the concentration of microorganisms in each of the standardized inocula as determined by the plate-count method. Incubate the inoculated containers at 22.5 ± 2.5°. Sample each container at the appropriate intervals (specified in *Table 3*). Record any changes observed in appearance at these intervals. Determine, by the plate-count procedure, the number of cfu present in each test preparation for the applicable intervals (see *General Procedures* in *Microbial Enumeration Tests* ⟨61⟩). Plate counts will be conducted using a

minimum of duplicate plates, with the cfu averaged before determination of deduced cfu/mL. If membrane filtration is used, duplicate membrane filters will be used for each estimate. Using the calculated concentrations of cfu/mL present at the start of the test, calculate the change in $\log_{10}$ values of the concentration of cfu/mL for each microorganism at the applicable test intervals, and express the changes in concentration in terms of log reductions. The log reduction is defined as the difference between the $\log_{10}$ unit value of the starting concentration of cfu/mL in the suspension and the $\log_{10}$ unit value of cfu/mL of the survivors at that time point.

Table 2. Culture Conditions for Inoculum Preparation

Organism	Suitable Medium	Incubation Temperature	Inoculum Incubation Time	Microbial Recovery Incubation Time
Escherichia coli (ATCC No. 8739)	Soybean–Casein Digest Broth; Soybean–Casein Digest Agar	32.5 ± 2.5°	18–24 h	3–5 days
Pseudomonas aeruginosa (ATCC No. 9027)	Soybean–Casein Digest Broth; Soybean–Casein Digest Agar	32.5 ± 2.5°	18–24 h	3–5 days
Staphylococcus aureus (ATCC No. 6538)	Soybean–Casein Digest Broth; Soybean–Casein Digest Agar	32.5 ± 2.5°	18–24 h	3–5 days
Candida albicans (ATCC No. 10231)	Sabouraud Dextrose Agar; Sabouraud Dextrose Broth	22.5 ± 2.5°	44–52 h	3–5 days
Aspergillus brasiliensis (ATCC No. 16404)	Sabouraud Dextrose Agar; Sabouraud Dextrose Broth	22.5 ± 2.5°	6–10 days	3–7 days

Criteria for Antimicrobial Effectiveness

The requirements for antimicrobial effectiveness are met if the criteria specified in *Table 3* are met (see *Test Results* in *General Notices*). "No increase" in counts is defined as NMT 0.5 $\log_{10}$ unit more than the value to which it is compared.

Table 3. Criteria for Tested Microorganisms

For Category 1 Products	
Bacteria	NLT 1.0 log reduction from the initial calculated count at 7 days, NLT 3.0 log reduction from the initial count at 14 days, and no increase from the 14 days' count at 28 days
Yeast and molds	No increase from the initial calculated count at 7, 14, and 28 days
For Category 2 Products	
Bacteria	NLT 2.0 log reduction from the initial count at 14 days, and no increase from the 14 days' count at 28 days
Yeast and molds	No increase from the initial calculated count at 14 and 28 days
For Category 3 Products	
Bacteria	NLT 1.0 log reduction from the initial count at 14 days, and no increase from the 14 days' count at 28 days
Yeast and molds	No increase from the initial calculated count at 14 and 28 days
For Category 4 Products	
Bacteria, yeast, and molds	No increase from the initial calculated count at 14 and 28 days

⟨55⟩ BIOLOGICAL INDICATORS—RESISTANCE PERFORMANCE TESTS

INTRODUCTION

A biological indicator (BI) is a well-characterized preparation of a specific microorganism with a known resistance to a specific sterilization process. The correct use of BIs in the development, validation, and control of sterilization processes requires that their population and resistance be accurately known. The population and resistance can be selected to confirm the adequacy of individual sterilization process conditions for an article. The recommendations of *Sterilization of Compendial Articles* ⟨1229⟩ should be followed for effective BI usage. The methods described below can be used to establish population and resistance, such that the response of the BI to the subject sterilization process is appropriate. Although the BI manufacturers are required to maintain rigorous control of population and resistance using the number of replicates as specified below, the end users are not required to use the same number of replicates for verification of those determinations. Conduct all of the tests described in this chapter under appropriate microbiological laboratory conditions (see *Microbiological Best Laboratory Practices* ⟨1117⟩).

TOTAL VIABLE SPORE COUNT

Sample Collection/Recovery

PAPER/FIBER INDICATORS

For paper/fiber carrier BIs, remove at least four test samples from their individual containers. Disperse the indicator into component fibers by placing the test samples in a sterile vessel containing 100 mL of sterilized *Purified Water* chilled to 2°–8°, and mechanically disrupt to achieve a homogeneous suspension. For self-contained BIs, aseptically remove four BI carriers from their containers and proceed as directed above.

INDICATORS ON OTHER SUBSTRATES

For all other biological indicators, remove at least four samples from their individual containers. Place the test samples in a sterile vessel containing 100 mL of sterilized *Purified Water* chilled to 2°–8°, and mechanically disrupt to achieve a homogeneous suspension of the spores in the water.

SPORE SUSPENSIONS

For spore suspensions of BIs, prepare an appropriate serial dilution of the original spore suspension in sterilized *Purified Water* chilled to 2°–8°, in a sterile container, and follow the viable spore count procedures as specified below. The requirements of the tests are met if the average number of viable spores is within 50%–300% of the labeled count of the spore suspension.

Viable Spore Count

Transfer a 10-mL aliquot of the suspension to a sterile tube. For BIs using spores of *Geobacillus stearothermophilus*, *Bacillus coagulans*, and other thermophilic spore formers, heat the tube containing the suspension in a water bath at 95°–100° for 15 min (heat shock), starting the timing when the temperature reaches 95°. For BIs containing nonthermophilic spore formers, heat the tube containing the suspension in a water bath at 80°–85° for 10 min, starting the timing when the temperature of the spore suspension reaches 80°. Cool suspensions rapidly in an ice-water bath at 0°–4°. Transfer two 1-mL aliquots to suitable tubes, and make appropriate serial dilutions in sterilized *Purified Water*. Calculate the dilutions to yield 30–300 colonies on each plate in a pair, when treated as described below. Where the BI has a low spore concentration, it may be necessary to modify the dilution series and to use more plates at each dilution.

Prepare a separate series of plates for each aliquot. Place 1.0 mL of each selected dilution in each of two 15 × 100-mm Petri dishes. Within 20 min, add to each plate 20 mL of *Soybean–Casein Digest Agar Medium* that has been melted and cooled to approximately 45°. Swirl to attain a homogeneous suspension, and allow it to solidify. Incubate the plates in an inverted position at 55°–60° for thermophilic spore formers and at 30°–35° for nonthermophilic spore formers or at the optimal recovery temperature specified by the manufacturer. Examine the plates after at least 48 h, recording for each plate the number of colonies. Calculate the average number of spores per test sample from the results, using the appropriate dilution factor. When evaluating vendor-supplied BIs, the viable spore count shall be between 50% and 300% of the manufacturer's stated value.

D-VALUE DETERMINATION

Apparatus

The test equipment used for the determination of microbial resistance ("D-value") is described in substantial detail in ISO 18472, Sterilization of Health Care Products—Biological and Chemical Indicators—Test Equipment (*1*). The details of individual Biological Indicator Evaluation Resistometers (BIERs) vary with the specifics of their design and the particular sterilization process for which they are used. Provided that the performance of the BIER vessel meets the requirements of the ISO standard for exposure of the BI, design differences are acceptable. For single-phase sterilization processes where an acceptable BIER has not been defined, the D-value determination can be accomplished by adapting a BIER design intended for a sterilization process operating in the same phase. There are no current methods available for D-value determination for multiple-phase sterilization processes.

Procedure

Carry out the tests for D-value at sterilization conditions consistent with those intended for use. Use 20 replicate test sample BIs in their original individual containers, subjected to at least five exposure conditions for a total of 100 tests. The number of exposure conditions is chosen to provide a range of observations from NLT one labeled D-value below the expected survival time through NLT one labeled D-value above the expected kill time. Place each group on a separate suitable sample holder

General Chapters

that permits each sample to be exposed to the prescribed sterilizing condition at a specific location in the sterilizing chamber of the BIER. Check the BIER apparatus for operating parameters using sample holders without test samples. Select a series of sterilizing times in increments from the shortest time for the samples to be tested. The differences in sterilizing times over the series are as constant as feasible, and the difference between adjacent times is NMT 75% of the expected D-value. Test procedures for the use of BIER vessels for the evaluation of microbial resistance are defined in a series of ISO standards under the 11138 series (*2–5*). The appropriate standard should be followed for the BI. The test methods and carriers used with the BIER may be adapted to the specifics of the BI. The method and apparatus used for paper carriers may differ from those for other carriers and will be substantially different from those used for suspensions of BIs.

The D-value exposure conditions for alternative material carriers are the same as the conditions used to determine the D-value for paper carriers. If a manufacturer's label permits usage of the BI carrier with multiple sterilization methods, then data on D-value, survival time, and kill time will need to be provided by the manufacturer for each sterilization method.

For BIs that are spore suspensions, conduct D-value determinations for each of the microorganisms that are provided as a liquid spore crop suspension. The test is conducted using appropriate serial dilutions predicated upon the stated spore filter of the suspension in *Purified Water* in a sterile tube. Where the suspension is placed on or in a substrate such as an elastomeric closure or formulated product, its resistance may differ from that determined in *Purified Water*. That difference may be significant to the usage of the BIs and appropriate measurements made before use in sterilization validation activities.

Recovery

After completion of the sterilizing procedure for BIs and within a noted time (NMT 4 h), aseptically remove and add each BI to a suitable medium (see media in *Sterility Tests* ⟨71⟩) to submerge the BI completely in a suitable tube. For self-contained BIs, the paper strip is immersed in the self-contained medium according to manufacturers' instructions, within a noted time NMT 4 h. For insoluble items inoculated with a spore suspension, aseptically transfer these items individually to a suitable medium (see media in ⟨71⟩) to submerge the item completely in the medium. When a sealed aqueous filled container has been inoculated, test the units individually, as described within ⟨71⟩.

Incubate each tube at the optimal recovery temperature appropriate for the BI. Observe each inoculated medium-containing tube at appropriate intervals for a total of 7 days after inoculation. Where growth is observed at any particular observation time, further incubation of the test sample(s) concerned may be omitted. Note the number of samples showing no evidence of growth at any time.

Where *Clostridium sporogenes* or another anaerobic microorganism is used as a BI, methods for preparation, inoculation, and recovery methods and media must be adapted to accommodate the use of these anaerobic spore formers.

Calculation

The determination of D-values of BIs can be performed using the Limited Spearman-Karber, Survival Curve Method, or Stumbo-Murphy-Cochran procedures (*6–8*). When the BI has been purchased, use the same method as that defined by the BI manufacturer to subsequently determine D-values. The use of an alternate method can result in differences that are more an artifact of the method than a variation in the performance of the BI.

Survival Time and Kill Time

Take two groups of BIs, each consisting of 10 test samples, in their original, individual containers. Place the samples of each group in suitable sample holders that permit each sample to be exposed to the sterilizing conditions at a specific location in the BIER chamber.

Expose the samples for the required survival time, enter the chamber, and remove the holder(s) containing the 10 test samples. Repeat the above procedure immediately, or preheat if a substantial interval has elapsed, so as to subject the second holder(s) containing 10 test samples similarly to the first conditions, but for the required kill time. Recover BIs as described above. The *Survival Time and Kill Time* should be provided by the BI manufacturer and verified by the end user.

REFERENCES

1. American National Standards Institute (ANSI)/Association for the Advancement of Medical Instrumentation (AAMI)/International Organization for Standardization (ISO) 18472:2006. Sterilization of health care products—biological and chemical indicators—test equipment. 1st ed. Arlington, VA: AAMI.
2. ANSI/AAMI/ISO 11138-1:2006. Sterilization of health care products—biological indicators—part 1: general requirements. 2nd ed. Arlington, VA: AAMI.
3. ANSI/AAMI/ISO 11138-2:2006. Sterilization of health care products—biological indicators—part 2: biological indicators for ethylene oxide sterilization processes. 3rd ed. Arlington, VA: AAMI.
4. ANSI/AAMI/ISO 11138-3:2006. Sterilization of health care products—biological indicators—part 3: biological indicators for moist heat sterilization processes. 1st ed. Arlington, VA: AAMI.

5. ANSI/AAMI/ISO 11138-4:2006. Sterilization of health care products—biological indicators—part 4: biological indicators for dry heat sterilization processes. 1st ed. Arlington, VA: AAMI.
6. Pflug IJ. Syllabus for an introductory course in the microbiology and engineering of sterilization processes. 4th ed. St. Paul, MN: Environmental Sterilization Services; 1980.
7. Pflug IJ, Smith GM. The use of biological indicators for monitoring wet-heat sterilization processes. In: Gaughran ERL, Kereluk K, eds. Sterilization of medical products. New Brunswick, NJ: Johnson and Johnson; 1977:193–230.
8. Holcomb RG, Pflug IJ. The Spearman-Karber method of analyzing quantal assay microbial destruction data. In: Pflug IJ, ed. Microbiology and engineering sterilization processes. St. Paul, MN: Environmental Sterilization Services; 1979.

⟨61⟩ MICROBIOLOGICAL EXAMINATION OF NONSTERILE PRODUCTS: MICROBIAL ENUMERATION TESTS

INTRODUCTION

The tests described hereafter will allow quantitative enumeration of mesophilic bacteria and fungi that may grow under aerobic conditions.

The tests are designed primarily to determine whether a substance or preparation complies with an established specification for microbiological quality. When used for such purposes, follow the instructions given below, including the number of samples to be taken, and interpret the results as stated below.

The methods are not applicable to products containing viable microorganisms as active ingredients.

Alternative microbiological procedures, including automated methods, may be used, provided that their equivalence to the Pharmacopeial method has been demonstrated.

GENERAL PROCEDURES

Carry out the determination under conditions designed to avoid extrinsic microbial contamination of the product to be examined. The precautions taken to avoid contamination must be such that they do not affect any microorganisms that are to be revealed in the test.

If the product to be examined has antimicrobial activity, this is, insofar as possible, removed or neutralized. If inactivators are used for this purpose, their efficacy and their absence of toxicity for microorganisms must be demonstrated.

If surface-active substances are used for sample preparation, their absence of toxicity for microorganisms and their compatibility with any inactivators used must be demonstrated.

ENUMERATION METHODS

Use the *Membrane Filtration* method or one of the *Plate-Count Methods*, as directed. The *Most-Probable-Number (MPN) Method* is generally the least accurate method for microbial counts; however, for certain product groups with very low bioburden, it may be the most appropriate method.

The choice of a method is based on factors such as the nature of the product and the required limit of microorganisms. The method chosen must allow testing of a sufficient sample size to judge compliance with the specification. The suitability of the chosen method must be established.

GROWTH PROMOTION TEST, SUITABILITY OF THE COUNTING METHOD AND NEGATIVE CONTROLS

General Considerations

The ability of the test to detect microorganisms in the presence of product to be tested must be established.

Suitability must be confirmed if a change in testing performance or a change in the product that may affect the outcome of the test, is introduced.

Preparation of Test Strains

Use standardized stable suspensions of test strains or prepare as stated below. Seed-lot culture maintenance techniques (seed-lot systems) are used so that the viable microorganisms used for inoculation are not more than five passages removed from the original master seed-lot. Grow each of the bacterial and fungal test strains separately as described in *Table 1*.

Table 1. Preparation and Use of Test Microorganisms

		Growth Promotion		Suitability of Counting Method in the Presence of Product	
Microorganism	**Preparation of Test Strain**	**Total Aerobic Microbial Count**	**Total Yeasts and Molds Count**	**Total Aerobic Microbial Count**	**Total Yeasts and Molds Count**
Staphylococcus aureus such as ATCC 6538, NCIMB 9518, CIP 4.83, or NBRC 13276	Soybean–Casein Digest Agar or Soybean–Casein Digest Broth 30°–35° 18–24 hours	Soybean–Casein Digest Agar and Soybean–Casein Digest Broth ≤100 cfu 30°–35° ≤3 days		Soybean–Casein Digest Agar/MPN Soybean–Casein Digest Broth ≤100 cfu 30°–35° ≤3 days	
Pseudomonas aeruginosa such as ATCC 9027, NCIMB 8626, CIP 82.118, or NBRC 13275	Soybean–Casein Digest Agar or Soybean–Casein Digest Broth 30°–35° 18–24 hours	Soybean–Casein Digest Agar and Soybean–Casein Digest Broth ≤100 cfu 30°–35° ≤3 days		Soybean–Casein Digest Agar/MPN Soybean–Casein Digest Broth ≤100 cfu 30°–35° ≤3 days	
Bacillus subtilis such as ATCC 6633, NCIMB 8054, CIP 52.62, or NBRC 3134	Soybean–Casein Digest Agar or Soybean–Casein Digest Broth 30°–35° 18–24 hours	Soybean–Casein Digest Agar and Soybean–Casein Digest Broth ≤100 cfu 30°–35° ≤3 days		Soybean–Casein Digest Agar/MPN Soybean–Casein Digest Broth ≤100 cfu 30°–35° ≤3 days	
Candida albicans such as ATCC 10231, NCPF 3179, IP 48.72, or NBRC 1594	Sabouraud Dextrose Agar or Sabouraud Dextrose Broth 20°–25° 2–3 days	Soybean–Casein Digest Agar ≤100 cfu 30°–35° ≤5 days	Sabouraud Dextrose Agar ≤100 cfu 20°–25° ≤5 days	Soybean–Casein Digest Agar ≤100 cfu 30°–35° ≤5 days MPN: not applicable	Sabouraud Dextrose Agar ≤100 cfu 20°–25° ≤5 days
Aspergillus brasiliensis such as ATCC 16404, IMI 149007, IP 1431.83, or NBRC 9455	Sabouraud Dextrose Agar or Potato–Dextrose Agar 20°–25° 5–7 days, or until good sporulation is achieved	Soybean–Casein Digest Agar ≤100 cfu 30°–35° ≤5 days	Sabouraud Dextrose Agar ≤100 cfu 20°–25° ≤5 days	Soybean–Casein Digest Agar ≤100 cfu 30°–35° ≤5 days MPN: not applicable	Sabouraud Dextrose Agar ≤100 cfu 20°–25° ≤5 days

Use *Buffered Sodium Chloride–Peptone Solution pH 7.0* or *Phosphate Buffer Solution pH 7.2* to make test suspensions; to suspend *A. brasiliensis* spores, 0.05% of polysorbate 80 may be added to the buffer. Use the suspensions within 2 hours, or within 24 hours if stored between 2° and 8°. As an alternative to preparing and then diluting a fresh suspension of vegetative cells of *A. brasiliensis* or *B. subtilis,* a stable spore suspension is prepared and then an appropriate volume of the spore suspension is used for test inoculation. The stable spore suspension may be maintained at 2° to 8° for a validated period of time.

Negative Control

To verify testing conditions, a negative control is performed using the chosen diluent in place of the test preparation. There must be no growth of microorganisms. A negative control is also performed when testing the products as described under *Testing of Products*. A failed negative control requires an investigation.

Growth Promotion of the Media

Test each batch of ready-prepared medium and each batch of medium prepared either from dehydrated medium or from the ingredients described.

Inoculate portions/plates of *Soybean–Casein Digest Broth* and *Soybean–Casein Digest Agar* with a small number (not more than 100 cfu) of the microorganisms indicated in *Table 1*, using a separate portion/plate of medium for each. Inoculate plates of *Sabouraud Dextrose Agar* with a small number (not more than 100 cfu) of the microorganisms indicated in *Table 1*, using a separate plate of medium for each. Incubate according to the conditions described in *Table 1*.

For solid media, growth obtained must not differ by a factor greater than 2 from the calculated value for a standardized inoculum. For a freshly prepared inoculum, growth of the microorganisms comparable to that previously obtained with a previously tested and approved batch of medium occurs. Liquid media are suitable if clearly visible growth of the microorganisms comparable to that previously obtained with a previously tested and approved batch of medium occurs.

Suitability of the Counting Method in the Presence of Product

PREPARATION OF THE SAMPLE

The method for sample preparation depends on the physical characteristics of the product to be tested. If none of the procedures described below can be demonstrated to be satisfactory, a suitable alternative procedure must be developed.

Water-Soluble Products—Dissolve or dilute (usually a 1 in 10 dilution is prepared) the product to be examined in *Buffered Sodium Chloride–Peptone Solution pH 7.0, Phosphate Buffer Solution pH 7.2,* or *Soybean–Casein Digest Broth.* If necessary, adjust to a pH of 6 to 8. Further dilutions, where necessary, are prepared with the same diluent.

Nonfatty Products Insoluble in Water—Suspend the product to be examined (usually a 1 in 10 dilution is prepared) in *Buffered Sodium Chloride–Peptone Solution pH 7.0, Phosphate Buffer Solution pH 7.2,* or *Soybean–Casein Digest Broth.* A surface-active agent such as 1 g per L of polysorbate 80 may be added to assist the suspension of poorly wettable substances. If necessary, adjust to a pH of 6 to 8. Further dilutions, where necessary, are prepared with the same diluent.

Fatty Products—Dissolve in isopropyl myristate sterilized by filtration, or mix the product to be examined with the minimum necessary quantity of sterile polysorbate 80 or another noninhibitory sterile surface-active reagent heated, if necessary, to not more than 40° or, in exceptional cases, to not more than 45°. Mix carefully and if necessary maintain the temperature in a water bath. Add a sufficient quantity of the prewarmed chosen diluent to make a 1 in 10 dilution of the original product. Mix carefully, while maintaining the temperature for the shortest time necessary for the formation of an emulsion. Further serial 10-fold dilutions may be prepared using the chosen diluent containing a suitable concentration of sterile polysorbate 80 or another noninhibitory sterile surface-active reagent.

Fluids or Solids in Aerosol Form—Aseptically transfer the product into a membrane filter apparatus or a sterile container for further sampling. Use either the total contents or a defined number of metered doses from each of the containers tested.

Transdermal Patches—Remove the protective cover sheets ("release liners") of the transdermal patches and place them, adhesive side upwards, on sterile glass or plastic trays. Cover the adhesive surface with a suitable sterile porous material (e.g., sterile gauze) to prevent the patches from sticking together, and transfer the patches to a suitable volume of the chosen diluent containing inactivators such as polysorbate 80 and/or lecithin. Shake the preparation vigorously for at least 30 minutes.

INOCULATION AND DILUTION

Add to the sample prepared as directed above and to a control (with no test material included) a sufficient volume of the microbial suspension to obtain an inoculum of not more than than 100 cfu. The volume of the suspension of the inoculum should not exceed 1% of the volume of diluted product.

To demonstrate acceptable microbial recovery from the product, the lowest possible dilution factor of the prepared sample must be used for the test. Where this is not possible due to antimicrobial activity or poor solubility, further appropriate protocols must be developed. If inhibition of growth by the sample cannot otherwise be avoided, the aliquot of the microbial suspension may be added after neutralization, dilution, or filtration.

NEUTRALIZATION/REMOVAL OF ANTIMICROBIAL ACTIVITY

The number of microorganisms recovered from the prepared sample diluted as described in *Inoculation and Dilution* and incubated following the procedure described in *Recovery of Microorganisms in the Presence of Product,* is compared to the number of microorganisms recovered from the control preparation.

If growth is inhibited (reduction by a factor greater than 2), then modify the procedure for the particular enumeration test to ensure the validity of the results. Modification of the procedure may include, for example,

(1) An increase in the volume of the diluent or culture medium;
(2) Incorporation of a specific or general neutralizing agents into the diluent;
(3) Membrane filtration; or
(4) A combination of the above measures.

Neutralizing Agents—Neutralizing agents may be used to neutralize the activity of antimicrobial agents (see *Table 2*). They may be added to the chosen diluent or the medium preferably before sterilization. If used, their efficacy and their absence of toxicity for microorganisms must be demonstrated by carrying out a blank with neutralizer and without product.

Table 2. Common Neutralizing Agents/Methods for Interfering Substances

Interfering Substance	Potential Neutralizing Agents/Method
Glutaraldehyde, mercurials	Sodium hydrogen sulfite (Sodium bisulfite)
Phenolics, alcohol, aldehydes, sorbate	Dilution
Aldehydes	Glycine
Quaternary ammonium compounds (QACs), parahydroxybenzoates (parabens), bis-biguanides	Lecithin
QACs, iodine, parabens	Polysorbate

General Chapters

Table 2. Common Neutralizing Agents/Methods for Interfering Substances *(Continued)*

Interfering Substance	Potential Neutralizing Agents/Method
Mercurials	Thioglycollate
Mercurials, halogens, aldehydes	Thiosulfate
EDTA (edetate)	Mg or Ca ions

If no suitable neutralizing method can be found, it can be assumed that the failure to isolate the inoculated organism is attributable to the microbicidal activity of the product. This information serves to indicate that the article is not likely to be contaminated with the given species of the microorganism. However, it is possible that the product inhibits only some of the microorganisms specified herein, but does not inhibit others not included among the test strains or those for which the latter are not representative. Then, perform the test with the highest dilution factor compatible with microbial growth and the specific acceptance criterion.

RECOVERY OF MICROORGANISMS IN THE PRESENCE OF PRODUCT

For each of the microorganisms listed, separate tests are performed. Only microorganisms of the added test strain are counted.

Membrane Filtration—Use membrane filters having a nominal pore size not greater than 0.45 µm. The type of filter material is chosen in such a way that the bacteria-retaining efficiency is not affected by the components of the sample to be investigated. For each of the microorganisms listed, one membrane filter is used.

Transfer a suitable quantity of the sample prepared as described under *Preparation of the Sample, Inoculation and Dilution,* and *Neutralization/Removal of Antimicrobial Activity* (preferably representing 1 g of the product, or less if large numbers of cfu are expected) to the membrane filter, filter immediately, and rinse the membrane filter with an appropriate volume of diluent.

For the determination of total aerobic microbial count (TAMC), transfer the membrane filter to the surface of the *Soybean–Casein Digest Agar.* For the determination of total combined yeasts and molds count (TYMC), transfer the membrane to the surface of the *Sabouraud Dextrose Agar.* Incubate the plates as indicated in *Table 1*. Perform the counting.

Plate-Count Methods—Perform plate-count methods at least in duplicate for each medium, and use the mean count of the result.

Pour-Plate Method—For Petri dishes 9 cm in diameter, add to the dish 1 mL of the sample prepared as described under *Preparation of the Sample, Inoculation and Dilution,* and *Neutralization/Removal of Antimicrobial Activity* and 15 to 20 mL of *Soybean–Casein Digest Agar* or *Sabouraud Dextrose Agar,* both media maintained at not more than 45°. If larger Petri dishes are used, the amount of agar medium is increased accordingly. For each of the microorganisms listed in *Table 1*, at least two Petri dishes are used.

Incubate the plates as indicated in *Table 1*. Take the arithmetic mean of the counts per medium, and calculate the number of cfu in the original inoculum.

Surface-Spread Method—For Petri dishes 9 cm in diameter, add 15 to 20 mL of *Soybean–Casein Digest Agar* or *Sabouraud Dextrose Agar* at about 45° to each Petri dish, and allow to solidify. If larger Petri dishes are used, the volume of the agar is increased accordingly. Dry the plates, for example, in a laminar-airflow cabinet or in an incubator. For each of the microorganisms listed in *Table 1*, at least two Petri dishes are used. Spread a measured volume of not less than 0.1 mL of the sample, prepared as directed under *Preparation of the Sample, Inoculation and Dilution,* and *Neutralization/Removal of Antimicrobial Activity* over the surface of the medium. Incubate and count as directed for *Pour-Plate Method.*

Most-Probable-Number (MPN) Method—The precision and accuracy of the *MPN Method* is less than that of the *Membrane Filtration* method or the *Plate-Count Method.* Unreliable results are obtained particularly for the enumeration of molds. For these reasons, the *MPN Method* is reserved for the enumeration of TAMC in situations where no other method is available. If the use of the method is justified, proceed as follows.

Prepare a series of at least three serial 10-fold dilutions of the product as described for *Preparation of the Sample, Inoculation and Dilution,* and *Neutralization/Removal of Antimicrobial Activity.* From each level of dilution, three aliquots of 1 g or 1 mL are used to inoculate three tubes with 9 to 10 mL of *Soybean–Casein Digest Broth.* If necessary a surface-active agent such as polysorbate 80, or an inactivator of antimicrobial agents may be added to the medium. Thus, if three levels of dilution are prepared, nine tubes are inoculated.

Incubate all tubes at 30° to 35° for not more than 3 days. If reading of the results is difficult or uncertain owing to the nature of the product to be examined, subculture in the same broth or in *Soybean–Casein Digest Agar* for 1 to 2 days at the same temperature, and use these results. From *Table 3,* determine the most probable number of microorganisms per g or mL of the product to be examined.

Table 3. Most-Probable-Number Values of Microorganisms

Observed Combinations of Numbers of Tubes Showing Growth in Each Set			MPN per g or per mL of Product	95% Confidence Limits
Number of g or mL of Product per Tube				
0.1	0.01	0.001		
0	0	0	<3	0–9.4
0	0	1	3	0.1–9.5
0	1	0	3	0.1–10
0	1	1	6.1	1.2–17
0	2	0	6.2	1.2–17
0	3	0	9.4	3.5–35
1	0	0	3.6	0.2–17
1	0	1	7.2	1.2–17
1	0	2	11	4–35
1	1	0	7.4	1.3–20
1	1	1	11	4–35
1	2	0	11	4–35
1	2	1	15	5–38
1	3	0	16	5–38
2	0	0	9.2	1.5–35
2	0	1	14	4–35
2	0	2	20	5–38
2	1	0	15	4–38
2	1	1	20	5–38
2	1	2	27	9–94
2	2	0	21	5–40
2	2	1	28	9–94
2	2	2	35	9–94
2	3	0	29	9–94
2	3	1	36	9–94
3	0	0	23	5–94
3	0	1	38	9–104
3	0	2	64	16–181
3	1	0	43	9–181
3	1	1	75	17–199
3	1	2	120	30–360
3	1	3	160	30–380
3	2	0	93	18–360
3	2	1	150	30–380
3	2	2	210	30–400
3	2	3	290	90–990
3	3	0	240	40–990
3	3	1	460	90–1980
3	3	2	1100	200–4000
3	3	3	>1100	

RESULTS AND INTERPRETATION

When verifying the suitability of the *Membrane Filtration* method or the *Plate-Count Method,* a mean count of any of the test organisms not differing by a factor greater than 2 from the value of the control defined in *Inoculation and Dilution* in the absence of product must be obtained. When verifying the suitability of the *MPN Method,* the calculated value from the inoculum must be within 95% confidence limits of the results obtained with the control.

If the above criteria cannot be met for one of more of the organisms tested with any of the described methods, the method and test conditions that come closest to the criteria are used to test the product.

TESTING OF PRODUCTS

Amount Used for the Test

Unless otherwise directed, use 10 g or 10 mL of the product to be examined taken with the precautions referred to above. For fluids or solids in aerosol form, sample 10 containers. For transdermal patches, sample 10 patches.

The amount to be tested may be reduced for active substances that will be formulated in the following conditions: the amount per dosage unit (e.g., tablet, capsule, injection) is less than or equal to 1 mg, or the amount per g or mL (for preparations not presented in dose units) is less than 1 mg. In these cases, the amount of sample to be tested is not less than the amount present in 10 dosage units or 10 g or 10 mL of the product.

For materials used as active substances where the sample quantity is limited or batch size is extremely small (i.e., less than 1000 mL or 1000 g), the amount tested shall be 1% of the batch unless a lesser amount is prescribed or justified and authorized.

For products where the total number of entities in a batch is less than 200 (e.g., samples used in clinical trials), the sample size may be reduced to two units, or one unit if the size is less than 100.

Select the sample(s) at random from the bulk material or from the available containers of the preparation. To obtain the required quantity, mix the contents of a sufficient number of containers to provide the sample.

Examination of the Product

MEMBRANE FILTRATION

Use a filtration apparatus designed to allow the transfer of the filter to the medium. Prepare the sample using a method that has been shown to be suitable as described in *Growth Promotion Test and Suitability of the Counting Method,* transfer the appropriate amount to each of two membrane filters, and filter immediately. Wash each filter following the procedure shown to be suitable.

For the determination of TAMC, transfer one of the membrane filters to the surface of *Soybean–Casein Digest Agar*. For the determination of TYMC, transfer the other membrane to the surface of *Sabouraud Dextrose Agar*. Incubate the plate of *Soybean–Casein Digest Agar* at 30° to 35° for 3 to 5 days and the plate of *Sabouraud Dextrose Agar* at 20° to 25° for 5 to 7 days. Calculate the number of cfu per g or per mL of product.

When examining transdermal patches, separately filter 10% of the volume of the preparation described for *Preparation of the Sample* through each of two sterile filter membranes. Transfer one membrane to *Soybean–Casein Digest Agar* for TAMC and the other membrane to *Sabouraud Dextrose Agar* for TYMC.

PLATE-COUNT METHODS

Pour-Plate Method—Prepare the sample using a method that has been shown to be suitable as described in *Growth Promotion Test and Suitability of the Counting Method.* Prepare for each medium at least two Petri dishes for each level of dilution. Incubate the plates of *Soybean–Casein Digest Agar* at 30° to 35° for 3 to 5 days and the plates of *Sabouraud Dextrose Agar* at 20° to 25° for 5 to 7 days. Select the plates corresponding to a given dilution and showing the highest number of colonies less than 250 for TAMC and 50 for TYMC. Take the arithmetic mean per culture medium of the counts, and calculate the number of cfu per g or per mL of product.

Surface-Spread Method—Prepare the sample using a method that has been shown to be suitable as described in *Growth Promotion Test and Suitability of the Counting Method.* Prepare at least two Petri dishes for each medium and each level of dilution. For incubation and calculation of the number of cfu, proceed as directed for the *Pour-Plate Method.*

MOST-PROBABLE-NUMBER METHOD

Prepare and dilute the sample using a method that has been shown to be suitable as decribed in *Growth Promotion Test and Suitability of the Counting Method.* Incubate all tubes for 3 to 5 days at 30° to 35°. Subculture if necessary, using the procedure shown to be suitable. Record for each level of dilution the number of tubes showing microbial growth. Determine the most probable number of microorganisms per g or mL of the product to be examined from *Table 3.*

Interpretation of the Results

The total aerobic microbial count (TAMC) is considered to be equal to the number of cfu found using *Soybean–Casein Digest Agar;* if colonies of fungi are detected on this medium, they are counted as part of TAMC. The total combined yeasts and molds count (TYMC) is considered to be equal to the number of cfu found using *Sabouraud Dextrose Agar;* if colonies of bacteria are detected on this medium, they are counted as part of TYMC. When the TYMC is expected to exceed the acceptance

criterion due to the bacterial growth, *Sabouraud Dextrose Agar* containing antibiotics may be used. If the count is carried out by the *MPN Method*, the calculated value is TAMC.

When an acceptance criterion for microbiological quality is prescribed, it is interpreted as follows:

— 10^1 cfu: maximum acceptable count = 20;

— 10^2 cfu: maximum acceptable count = 200;

— 10^3 cfu: maximum acceptable count = 2000;

and so forth.

The recommended solutions and media are described in *Tests for Specified Microorganisms* ⟨62⟩.

⟨62⟩ MICROBIOLOGICAL EXAMINATION OF NONSTERILE PRODUCTS: TESTS FOR SPECIFIED MICROORGANISMS

INTRODUCTION

The tests described hereafter will allow determination of the absence of, or limited occurrence of, specified microorganisms that may be detected under the conditions described.

The tests are designed primarily to determine whether a substance or preparation complies with an established specification for microbiological quality. When used for such purposes, follow the instructions given below, including the number of samples to be taken, and interpret the results as stated below.

Alternative microbiological procedures, including automated methods, may be used, provided that their equivalence to the Pharmacopeial method has been demonstrated.

GENERAL PROCEDURES

The preparation of samples is carried out as described in *Microbiological Examination of Nonsterile Products: Microbial Enumeration Tests* ⟨61⟩.

If the product to be examined has antimicrobial activity, this is insofar as possible removed or neutralized as described in *Microbiological Examination of Nonsterile Products: Microbial Enumeration Tests* ⟨61⟩.

If surface-active substances are used for sample preparation, their absence of toxicity for microorganisms and their compatibility with any inactivators used must be demonstrated as described in *Microbiological Examination of Nonsterile Products: Microbial Enumeration Tests* ⟨61⟩.

GROWTH-PROMOTING AND INHIBITORY PROPERTIES OF THE MEDIA, SUITABILITY OF THE TEST AND NEGATIVE CONTROLS

The ability of the test to detect microorganisms in the presence of the product to be tested must be established. Suitability must be confirmed if a change in testing performance or a change in the product that may affect the outcome of the test is introduced.

Preparation of Test Strains

Use standardized stable suspensions of test strains as stated below. Seed-lot culture maintenance techniques (seed-lot systems) are used so that the viable microorganisms used for inoculation are not more than five passages removed from the original master seed-lot.

AEROBIC MICROORGANISMS

Grow each of the bacterial test strains separately in containers containing *Soybean–Casein Digest Broth* or on *Soybean–Casein Digest Agar* at 30° to 35° for 18 to 24 hours. Grow the test strain for *Candida albicans* separately on *Sabouraud Dextrose Agar* or in *Sabouraud Dextrose Broth* at 20° to 25° for 2 to 3 days.

Staphylococcus aureus	such as ATCC 6538, NCIMB 9518, CIP 4.83, or NBRC 13276
Pseudomonas aeruginosa	such as ATCC 9027, NCIMB 8626, CIP 82.118, or NBRC 13275
Escherichia coli	such as ATCC 8739, NCIMB 8545, CIP 53.126, or NBRC 3972
Salmonella enterica subsp. *enterica* serovar Typhimurium or, as an alternative,	such as ATCC 14028

Salmonella enterica subsp. *enterica* serovar Abony	such as NBRC 100797, NCTC 6017, or CIP 80.39
Candida albicans	such as ATCC 10231, NCPF 3179, IP 48.72, or NBRC 1594

Use *Buffered Sodium Chloride–Peptone Solution pH 7.0* or *Phosphate Buffer Solution pH 7.2* to make test suspensions. Use the suspensions within 2 hours or within 24 hours if stored at 2° to 8°.

CLOSTRIDIA

Use *Clostridium sporogenes* such as ATCC 11437 (NBRC 14293, NCIMB 12343, CIP 100651) or ATCC 19404 (NCTC 532 or CIP 79.3). Grow the clostridial test strain under anaerobic conditions in *Reinforced Medium for Clostridia* at 30° to 35° for 24 to 48 hours. As an alternative to preparing and then diluting down a fresh suspension of vegetative cells of *Cl. sporogenes*, a stable spore suspension is used for test inoculation. The stable spore suspension may be maintained at 2° to 8° for a validated period.

Negative Control

To verify testing conditions, a negative control is performed using the chosen diluent in place of the test preparation. There must be no growth of microorganisms. A negative control is also performed when testing the products as described under *Testing of Products*. A failed negative control requires an investigation.

Growth Promotion and Inhibitory Properties of the Media

Test each batch of ready-prepared medium and each batch of medium prepared either from dehydrated medium or from ingredients. Verify suitable properties of relevant media as described in *Table 1*.

Table 1. Growth Promoting, Inhibitory, and Indicative Properties of Media

Test/Medium	Property	Test Strains
Test for bile-tolerant Gram-negative bacteria		
Enterobacteria Enrichment Broth Mossel	Growth promoting	*E. coli*
		P. aeruginosa
	Inhibitory	*S. aureus*
Violet Red Bile Glucose Agar	Growth promoting + Indicative	*E. coli*
		P. aeruginosa
Test for Escherichia coli		
MacConkey Broth	Growth promoting	*E. coli*
	Inhibitory	*S. aureus*
MacConkey Agar	Growth promoting + Indicative	*E. coli*
Test for Salmonella		
Rappaport Vassiliadis Salmonella Enrichment Broth	Growth promoting	*Salmonella enterica* subsp. *enterica* Typhimurium or
		Salmonella enterica subsp. *enterica* serovar Abony
	Inhibitory	*S. aureus*
Xylose Lysine Deoxycholate Agar	Growth promoting + Indicative	*Salmonella enterica* subsp. *enterica* serovar Typhimurium or
		Salmonella enterica subsp. *enterica* serovar Abony
Test for Pseudomonas aeruginosa		
Cetrimide Agar	Growth promoting	*P. aeruginosa*
	Inhibitory	*E. coli*
Test for Staphylococcus aureus		
Mannitol Salt Agar	Growth promoting + Indicative	*S. aureus*
	Inhibitory	*E. coli*
Test for Clostridia		
Reinforced Medium for Clostridia	Growth promoting	*Cl. sporogenes*
Columbia Agar	Growth promoting	*Cl. sporogenes*

Table 1. Growth Promoting, Inhibitory, and Indicative Properties of Media *(Continued)*

Test/Medium	Property	Test Strains
Test for Candida albicans		
Sabouraud Dextrose Broth	Growth promoting	*C. albicans*
Sabouraud Dextrose Agar	Growth promoting + Indicative	*C. albicans*

Test for Growth-Promoting Properties, Liquid Media—Inoculate a portion of the appropriate medium with a small number (not more than 100 cfu) of the appropriate microorganism. Incubate at the specified temperature for not more than the shortest period of time specified in the test. Clearly visible growth of the microorganism comparable to that previously obtained with a previously tested and approved batch of medium occurs.

Test for Growth-Promoting Properties, Solid Media—Perform *Surface-Spread Method* (see *Plate-Count Methods* under *Microbiological Examination of Nonsterile Products: Microbial Enumeration Tests* ⟨61⟩), inoculating each plate with a small number (not more than 100 cfu) of the appropriate microorganism. Incubate at the specified temperature for not more than the shortest period of time specified in the test. Growth of the microorganism comparable to that previously obtained with a previously tested and approved batch of medium occurs.

Test for Inhibitory Properties, Liquid or Solid Media—Inoculate the appropriate medium with at least 100 cfu of the appropriate microorganism. Incubate at the specified temperature for not less than the longest period of time specified in the test. No growth of the test microorganism occurs.

Test for Indicative Properties—Perform *Surface-Spread Method* (see *Plate-Count Methods* under *Microbiological Examination of Nonsterile Products: Microbial Enumeration Tests* ⟨61⟩), inoculating each plate with a small number (not more than 100 cfu) of the appropriate microorganism. Incubate at the specified temperature for a period of time within the range specified in the test. Colonies are comparable in appearance and indication reactions to those previously obtained with a previously tested and approved batch of medium.

Suitability of the Test Method

For each new product to be tested perform sample preparation as described in the relevant paragraph under *Testing of Products*. At the time of mixing, add each test strain in the prescribed growth medium. Inoculate the test strains individually. Use a number of microorganisms equivalent to not more than 100 cfu in the inoculated test preparation.

Perform the test as described in the relevant paragraph under *Testing of Products* using the shortest incubation period prescribed.

The specified microorganisms must be detected with the indication reactions as described under *Testing of Products*.

Any antimicrobial activity of the product necessitates a modification of the test procedure (see *Neutralization/Removal of Antimicrobial Activity* under *Microbiological Examination of Nonsterile Products: Microbial Enumeration Tests* ⟨61⟩).

For a given product, if the antimicrobial activity with respect to a microorganism for which testing is prescribed cannot be neutralized, then it is to be assumed that the inhibited microorganism will not be present in the product.

TESTING OF PRODUCTS

Bile-Tolerant Gram-Negative Bacteria

Sample Preparation and Pre-Incubation—Prepare a sample using a 1 in 10 dilution of not less than 1 g of the product to be examined as described in *Microbiological Examination of Nonsterile Products: Microbial Enumeration Tests* ⟨61⟩, but using *Soybean–Casein Digest Broth* as the chosen diluent, mix, and incubate at 20° to 25° for a time sufficient to resuscitate the bacteria but not sufficient to encourage multiplication of the organisms (usually 2 hours but not more than 5 hours).

Test for Absence—Unless otherwise prescribed, use the volume corresponding to 1 g of the product, as prepared in *Sample Preparation and Pre-Incubation,* to inoculate *Enterobacteria Enrichment Broth Mossel*. Incubate at 30° to 35° for 24 to 48 hours. Subculture on plates of *Violet Red Bile Glucose Agar*. Incubate at 30° to 35° for 18 to 24 hours.

The product complies with the test if there is no growth of colonies.

Quantitative Test—

Selection and Subculture—Inoculate suitable quantities of *Enterobacteria Enrichment Broth Mossel* with the preparation as directed under *Sample Preparation and Pre-Incubation* and/or dilutions of it containing respectively 0.1 g, 0.01 g, and 0.001 g (or 0.1 mL, 0.01 mL, and 0.001 mL) of the product to be examined. Incubate at 30° to 35° for 24 to 48 hours. Subculture each of the cultures on a plate of *Violet Red Bile Glucose Agar*. Incubate at 30° to 35° for 18 to 24 hours.

Interpretation—Growth of colonies constitutes a positive result. Note the smallest quantity of the product that gives a positive result and the largest quantity that gives a negative result. Determine from *Table 2* the probable number of bacteria.

General Chapters

Table 2. Interpretation of Results

Results for Each Quantity of Product			
0.1 g or 0.1 mL	**0.01 g or 0.01 mL**	**0.001 g or 0.001 mL**	**Probable Number of Bacteria per g or mL of Product**
+	+	+	more than 10^3
+	+	−	less than 10^3 and more than 10^2
+	−	−	less than 10^2 and more than 10
−	−	−	less than 10

Escherichia coli

Sample Preparation and Pre-Incubation—Prepare a sample using a 1 in 10 dilution of not less than 1 g of the product to be examined as described in *Microbiological Examination of Nonsterile Products: Microbial Enumeration Tests* ⟨61⟩, and use 10 mL or the quantity corresponding to 1 g or 1 mL, to inoculate a suitable amount (determined as described under *Suitability of the Test Method*) of *Soybean–Casein Digest Broth,* mix, and incubate at 30° to 35° for 18 to 24 hours.

Selection and Subculture—Shake the container, transfer 1 mL of *Soybean–Casein Digest Broth* to 100 mL of *MacConkey Broth,* and incubate at 42° to 44° for 24 to 48 hours. Subculture on a plate of *MacConkey Agar* at 30° to 35° for 18 to 72 hours.

Interpretation—Growth of colonies indicates the possible presence of *E. coli.* This is confirmed by identification tests.

The product complies with the test if no colonies are present or if the identification tests are negative.

Salmonella

Sample Preparation and Pre-Incubation—Prepare the product to be examined as described in *Microbiological Examination of Nonsterile Products: Microbial Enumeration Tests* ⟨61⟩, and use the quantity corresponding to not less than 10 g or 10 mL to inoculate a suitable amount (determined as described under *Suitability of the Test Method*) of *Soybean–Casein Digest Broth,* mix, and incubate at 30° to 35° for 18 to 24 hours.

Selection and Subculture—Transfer 0.1 mL of *Soybean–Casein Digest Broth* to 10 mL of *Rappaport Vassiliadis Salmonella Enrichment Broth,* and incubate at 30° to 35° for 18 to 24 hours. Subculture on plates of *Xylose Lysine Deoxycholate Agar.* Incubate at 30° to 35° for 18 to 48 hours.

Interpretation—The possible presence of *Salmonella* is indicated by the growth of well-developed, red colonies, with or without black centers. This is confirmed by identification tests.

The product complies with the test if colonies of the types described are not present or if the confirmatory identification tests are negative.

Pseudomonas aeruginosa

Sample Preparation and Pre-Incubation—Prepare a sample using a 1 in 10 dilution of not less than 1 g of the product to be examined as described in *Microbiological Examination of Nonsterile Products: Microbial Enumeration Tests* ⟨61⟩, and use 10 mL or the quantity corresponding to 1 g or 1 mL to inoculate a suitable amount (determined as described under *Suitability of the Test Method*) of *Soybean–Casein Digest Broth,* and mix. When testing transdermal patches, filter the volume of sample corresponding to one patch of the preparation (see *Transdermal Patches* under *Preparation of the Sample* in *Microbiological Examination of Nonsterile Products: Microbial Enumeration Tests* ⟨61⟩) through a sterile filter membrane, and place in 100 mL of *Soybean–Casein Digest Broth.* Incubate at 30° to 35° for 18 to 24 hours.

Selection and Subculture—Subculture on a plate of *Cetrimide Agar,* and incubate at 30° to 35° for 18 to 72 hours.

Interpretation—Growth of colonies indicates the possible presence of *P. aeruginosa.* This is confirmed by identification tests.

The product complies with the test if colonies are not present or if the confirmatory identification tests are negative.

Staphylococcus aureus

Sample Preparation and Pre-Incubation—Prepare a sample using a 1 in 10 dilution of not less than 1 g of the product to be examined as described in *Microbiological Examination of Nonsterile Products: Microbial Enumeration Tests* ⟨61⟩, and use 10 mL or the quantity corresponding to 1 g or 1 mL to inoculate a suitable amount (determined as described under *Suitability of the Test Method*) of *Soybean–Casein Digest Broth,* and homogenize. When testing transdermal patches, filter the volume of sample corresponding to one patch of the preparation (see *Transdermal Patches* under *Preparation of the Sample* in *Microbiological Examination of Nonsterile Products: Microbial Enumeration Tests* ⟨61⟩) through a sterile filter membrane, and place in 100 mL of *Soybean–Casein Digest Broth.* Incubate at 30° to 35° for 18 to 24 hours.

Selection and Subculture—Subculture on a plate of *Mannitol Salt Agar,* and incubate at 30° to 35° for 18 to 72 hours.

Interpretation—The possible presence of *S. aureus* is indicated by the growth of yellow or white colonies surrounded by a yellow zone. This is confirmed by identification tests.

The product complies with the test if colonies of the types described are not present or if the confirmatory identification tests are negative.

Clostridia

Sample Preparation and Heat Treatment—Prepare a sample using a 1 in 10 dilution (with a minimum total volume of 20 mL) of not less than 2 g or 2 mL of the product to be examined as described in *Microbiological Examination of Nonsterile Products: Microbial Enumeration Tests* ⟨61⟩. Divide the sample into two portions of at least 10 mL. Heat one portion at 80° for 10 minutes, and cool rapidly. Do not heat the other portion.

Selection and Subculture—Use 10 mL or the quantity corresponding to 1 g or 1 mL of the product to be examined of both portions to inoculate suitable amounts (determined as described under *Suitability of the Test Method*) of *Reinforced Medium for Clostridia*. Incubate under anaerobic conditions at 30° to 35° for 48 hours. After incubation, make subcultures from each container on *Columbia Agar*, and incubate under anaerobic conditions at 30° to 35° for 48 to 72 hours.

Interpretation—The occurrence of anaerobic growth of rods (with or without endospores) giving a negative catalase reaction indicates the presence of Clostridia.

This is confirmed by identification tests. The product complies with the test if colonies of the types described are not present or if the confirmatory identification tests are negative.

Candida albicans

Sample Preparation and Pre-Incubation—Prepare the product to be examined as described in *Microbiological Examination of Nonsterile Products: Microbial Enumeration Tests* ⟨61⟩, and use 10 mL or the quantity corresponding to not less than 1 g or 1 mL, to inoculate 100 mL of *Sabouraud Dextrose Broth*, and mix. Incubate at 30° to 35° for 3 to 5 days.

Selection and Subculture—Subculture on a plate of *Sabouraud Dextrose Agar*, and incubate at 30° to 35° for 24 to 48 hours.

Interpretation—Growth of white colonies may indicate the presence of *C. albicans*. This is confirmed by identification tests.

The product complies with the test if such colonies are not present or if the confirmatory identification tests are negative.

RECOMMENDED SOLUTIONS AND CULTURE MEDIA

NOTE—This section is given for information.

The following solutions and culture media have been found satisfactory for the purposes for which they are prescribed in the test for microbial contamination in the Pharmacopeia. Other media may be used provided that their suitability can be demonstrated.

Stock Buffer Solution—Transfer 34 g of potassium dihydrogen phosphate to a 1000-mL volumetric flask, dissolve in 500 mL of Purified Water, adjust with sodium hydroxide to a pH of 7.2 ± 0.2, add Purified Water to volume, and mix. Dispense in containers, and sterilize. Store at a temperature of 2° to 8°.

Phosphate Buffer Solution pH 7.2—Prepare a mixture of Purified Water and *Stock Buffer Solution* (800:1 v/v), and sterilize.

Buffered Sodium Chloride–Peptone Solution pH 7.0	
Potassium Dihydrogen Phosphate	3.6 g
Disodium Hydrogen Phosphate Dihydrate	7.2 g (equivalent to 0.067 M phosphate)
Sodium Chloride	4.3 g
Peptone (meat or casein)	1.0 g
Purified Water	1000 mL

Sterilize in an autoclave using a validated cycle.

Soybean–Casein Digest Broth	
Pancreatic Digest of Casein	17.0 g
Papaic Digest of Soybean	3.0 g
Sodium Chloride	5.0 g
Dibasic Hydrogen Phosphate	2.5 g
Glucose Monohydrate	2.5 g
Purified Water	1000 mL

Adjust the pH so that after sterilization it is 7.3 ± 0.2 at 25°. Sterilize in an autoclave using a validated cycle.

Soybean–Casein Digest Agar	
Pancreatic Digest of Casein	15.0 g
Papaic Digest of Soybean	5.0 g
Sodium Chloride	5.0 g
Agar	15.0 g
Purified Water	1000 mL

Adjust the pH so that after sterilization it is 7.3 ± 0.2 at 25°. Sterilize in an autoclave using a validated cycle.

Sabouraud Dextrose Agar	
Dextrose	40.0 g
Mixture of Peptic Digest of Animal Tissue and Pancreatic Digest of Casein (1:1)	10.0 g
Agar	15.0 g
Purified Water	1000 mL

Adjust the pH so that after sterilization it is 5.6 ± 0.2 at 25°. Sterilize in an autoclave using a validated cycle.

Potato Dextrose Agar	
Infusion from potatoes	200 g
Dextrose	20.0 g
Agar	15.0 g
Purified Water	1000 mL

Adjust the pH so that after sterilization it is 5.6 ± 0.2 at 25°. Sterilize in an autoclave using a validated cycle.

Sabouraud Dextrose Broth	
Dextrose	20.0 g
Mixture of Peptic Digest of Animal Tissue and Pancreatic Digest of Casein (1:1)	10.0 g
Purified Water	1000 mL

Adjust the pH so that after sterilization it is 5.6 ± 0.2 at 25°. Sterilize in an autoclave using a validated cycle.

Enterobacteria Enrichment Broth Mossel	
Pancreatic Digest of Gelatin	10.0 g
Glucose Monohydrate	5.0 g
Dehydrated Ox Bile	20.0 g
Potassium Dihydrogen Phosphate	2.0 g
Disodium Hydrogen Phosphate Dihydrate	8.0 g
Brilliant Green	15 mg
Purified Water	1000 mL

Adjust the pH so that after heating it is 7.2 ± 0.2 at 25°. Heat at 100° for 30 minutes, and cool immediately.

Violet Red Bile Glucose Agar	
Yeast Extract	3.0 g
Pancreatic Digest of Gelatin	7.0 g
Bile Salts	1.5 g
Sodium Chloride	5.0 g
Glucose Monohydrate	10.0 g
Agar	15.0 g
Neutral Red	30 mg
Crystal Violet	2 mg
Purified Water	1000 mL

Adjust the pH so that after heating it is 7.4 ± 0.2 at 25°. Heat to boiling; do not heat in an autoclave.

MacConkey Broth	
Pancreatic Digest of Gelatin	20.0 g
Lactose Monohydrate	10.0 g
Dehydrated Ox Bile	5.0 g
Bromocresol Purple	10 mg

MacConkey Broth	
Purified Water	1000 mL

Adjust the pH so that after sterilization it is 7.3 ± 0.2 at 25°. Sterilize in an autoclave using a validated cycle.

MacConkey Agar	
Pancreatic Digest of Gelatin	17.0 g
Peptones (meat and casein)	3.0 g
Lactose Monohydrate	10.0 g
Sodium Chloride	5.0 g
Bile Salts	1.5 g
Agar	13.5 g
Neutral Red	30.0 mg
Crystal Violet	1 mg
Purified Water	1000 mL

Adjust the pH so that after sterilization it is 7.1 ± 0.2 at 25°. Boil for 1 minute with constant shaking, then sterilize in an autoclave using a validated cycle.

Rappaport Vassiliadis Salmonella Enrichment Broth	
Soya Peptone	4.5 g
Magnesium Chloride Hexahydrate	29.0 g
Sodium Chloride	8.0 g
Dipotassium Phosphate	0.4 g
Potassium Dihydrogen Phosphate	0.6 g
Malachite Green	0.036 g
Purified Water	1000 mL

Dissolve, warming slightly. Sterilize in an autoclave using a validated cycle, at a temperature not exceeding 115°. The pH is to be 5.2 ± 0.2 at 25° after heating and autoclaving.

Xylose Lysine Deoxycholate Agar	
Xylose	3.5 g
L-Lysine	5.0 g
Lactose Monohydrate	7.5 g
Sucrose	7.5 g
Sodium Chloride	5.0 g
Yeast Extract	3.0 g
Phenol Red	80 mg
Agar	13.5 g
Sodium Deoxycholate	2.5 g
Sodium Thiosulfate	6.8 g
Ferric Ammonium Citrate	0.8 g
Purified Water	1000 mL

Adjust the pH so that after heating it is 7.4 ± 0.2 at 25°. Heat to boiling, cool to 50°, and pour into Petri dishes. Do not heat in an autoclave.

Cetrimide Agar	
Pancreatic Digest of Gelatin	20.0 g
Magnesium Chloride	1.4 g
Dipotassium Sulfate	10.0 g
Cetrimide	0.3 g
Agar	13.6 g
Purified Water	1000 mL
Glycerol	10.0 mL

Heat to boiling for 1 minute with shaking. Adjust the pH so that after sterilization it is 7.2 ± 0.2 at 25°. Sterilize in an autoclave using a validated cycle.

Mannitol Salt Agar	
Pancreatic Digest of Casein	5.0 g
Peptic Digest of Animal Tissue	5.0 g
Beef Extract	1.0 g
D-Mannitol	10.0 g
Sodium Chloride	75.0 g
Agar	15.0 g
Phenol Red	0.025 g
Purified Water	1000 mL

Heat to boiling for 1 minute with shaking. Adjust the pH so that after sterilization it is 7.4 ± 0.2 at 25°. Sterilize in an autoclave using a validated cycle.

Reinforced Medium for Clostridia	
Beef Extract	10.0 g
Peptone	10.0 g
Yeast Extract	3.0 g
Soluble Starch	1.0 g
Glucose Monohydrate	5.0 g
Cysteine Hydrochloride	0.5 g
Sodium Chloride	5.0 g
Sodium Acetate	3.0 g
Agar	0.5 g
Purified Water	1000 mL

Hydrate the agar, and dissolve by heating to boiling with continuous stirring. If necessary, adjust the pH so that after sterilization it is about 6.8 ± 0.2 at 25°. Sterilize in an autoclave using a validated cycle.

Columbia Agar	
Pancreatic Digest of Casein	10.0 g
Meat Peptic Digest	5.0 g
Heart Pancreatic Digest	3.0 g
Yeast Extract	5.0 g
Maize Starch	1.0 g
Sodium Chloride	5.0 g
Agar, according to gelling power	10.0–15.0 g
Purified Water	1000 mL

Hydrate the agar, and dissolve by heating to boiling with continuous stirring. If necessary, adjust the pH so that after sterilization it is 7.3 ± 0.2 at 25°. Sterilize in an autoclave using a validated cycle. Allow to cool to 45° to 50°; add, where necessary, gentamicin sulfate corresponding to 20 mg of gentamicin base, and pour into Petri dishes.

⟨63⟩ MYCOPLASMA TESTS

INTRODUCTION

The genus Mycoplasma represents a group of minute bacteria which have no cell walls. The genus comprises more than 120 species. They are the smallest self-replicating prokaryotic organisms. The cells vary in size and morphology and cannot be Gram stained, but impressions of colonies on solid agar can be stained with methylene blue or equivalent stain. Mycoplasma are parasites and commensals, and some may be pathogenic to a variety of animal and plant hosts. In humans, Mycoplasma are usually surface parasites that colonize the epithelial lining of the respiratory and urogenital tracts. Mycoplasma are common and may cause serious contamination in cell and/or tissue cultures used to generate compendial articles. They may also cause contamination of filtered sterilized soybean casein digest broth. A cell culture infection may persist for an extended period of time without causing apparent cell damage. Infection of cells in a culture can affect nearly every pathway of cell metabolism, including alteration of the cells' phenotypical characteristics and normal growth. The presence of Mycoplasma species does not always result in turbid growth in cultures or visible alteration of the cells.

General Chapters

Testing for Mycoplasma is a necessary quality control requirement to assure reliably pure biotechnological products and allied materials used to generate these products. This general test chapter describes two methods required to detect Mycoplasma contamination of test articles, tissues and/or cell cultures used to produce test articles, digest broth, or any other material in which Mycoplasma contamination is suspected. These are: (A) the agar and broth media procedure and (B) the indicator cell culture procedure. These tests require careful aseptic technique and suitable laboratory conditions. In order to ensure appropriate testing and interpretation of results, personnel should be properly trained and qualified. A validated nucleic acid amplification technique (NAT) or an enzymatic activity based method may be used to detect Mycoplasma, provided such a method is shown to be comparable to both methods (A) and (B). Alternative methods must be suitably validated. Validation requirements for alternate methods will not be addressed in this chapter.

CULTURE METHOD

Choice of Media

The test is carried out using a sufficient number of both solid and liquid media to ensure growth in the chosen incubation conditions of small numbers (approximately 100 colony-forming units, cfu; or 100 color-changing units, ccu) of Mycoplasmas that may be present in the test article/material. Liquid media must contain phenol red. The range of media chosen is shown to have satisfactory nutritive properties for at least the microorganisms shown in *Quality Control Test Strain Organisms* (below). The nutritive properties of each new batch of medium are verified for the appropriate microorganisms in the list. When testing for Mycoplasmas include in each test at least two known Mycoplasma species or strains (listed in *Quality Control Test Strain Organisms*) as positive controls, one of which should be a dextrose fermenter (i.e., *M. pneumoniae* or equivalent species and strain) and one of which should be an arginine hydrolyzer (i.e., *M. orale* or equivalent species and strain). Only when testing insect cell lines should one include a *Spiroplasma* control strain (e.g., *S. citri* ATCC 29747, *S. melliferum* ATCC 29416, or equivalent species and strains). Additionally, these strains may be a little more fastidious in their nutritional requirements. They require lower incubation temperatures (as do insect cell lines).

Quality Control Test Strain Organisms

Positive control cultures should be not more than 15 passages from isolation. Mycoplasma species or strains suitable for use are listed below:

— *Acholeplasma laidlawii* (vaccines and/or cell-derived materials/cultures for human and veterinary use when an antibiotic has been used during production)
— *M. gallisepticum* (when avian material has been used during production or when the vaccine or cell culture is intended for use in poultry)
— *M. hyorhinis* (nonavian veterinary vaccines or cell cultures)
— *M. orale* (vaccines for human and veterinary use)
— *M. pneumoniae* (vaccines or cell banks for human use) or another suitable species of D-glucose fermenter such as *M. fermentans*
— *M. synoviae* (when avian material has been used during production or when the vaccine or cell bank is intended for use in poultry)

The test strains may be field isolates that have undergone a limited number of subcultures (not more than 15), are stored frozen (–20° or lower) or freeze-dried, and are identified as being of the required species by comparison with type cultures, for example, those shown in *Table 1*.

Table 1. Type Cultures for Identifying Field Isolates Used as Test Strains

Test Organism	NCTC Number	CIP Number	ATCC Number
A. laidlawii	NCTC 10116	CIP 75.27	ATCC 23206
M. gallisepticum	NCTC 10115	CIP 104967	ATCC 19610
M. fermentans	NCTC 10117	CIP 105680	ATCC 19989
M. hyorhinis	NCTC 10130	CIP 104968	ATCC 17981
M. orale	NCTC 10112	CIP 104969	ATCC 23714
M. pneumoniae	NCTC 10119	CIP 103766	ATCC 15531
M. synoviae	NCTC 10124	CIP 104970	ATCC 25204

Incubation Conditions

Incubate liquid media in tightly stoppered containers at 36 ± 1°. Incubate solid media in microaerophilic conditions (hydrogen atmosphere containing < 0.5% oxygen and/or nitrogen containing 5%–10% carbon dioxide in nitrogen). Sufficient humidity should be available to prevent desiccation of the agar surface at 36 ± 1°.

Nutritive Properties

Carry out the test for nutritive properties for each new batch of medium. Inoculate the chosen media with the appropriate test microorganisms; use not more than 100 cfu per plate containing at least 9 mL of solid media and per 100-mL container of liquid medium; use a separate plate and container for each species of microorganism. Incubate the media and make subcultures from 0.2 mL of liquid medium to solid medium at the specified intervals (see below under *Test for Mycoplasma in the Test Article/Material*). The solid medium complies with the test if a count within a 0.5-log unit range of the inoculate amount is found for each test microorganism. The liquid medium complies with the test if growth is found on agar plates subcultured from the broth, for at least 1 subculture for each test microorganism. The use of a microscope at 100× or greater may be helpful.

Inhibitory Substances

The test for inhibitory substances is carried out once for a given product and is repeated whenever there is a change in production method that may affect the detection of Mycoplasma. To demonstrate absence of inhibitory substances, carry out the test for nutritive properties in the presence and absence of the test article/material. If growth of a test microorganism occurs more than 1 subculture sooner in the absence of the test article/material than in its presence, inhibitory substances are present. The same is true if plates directly inoculated with the test article/material are not within a 0.5-log unit range of the number of colonies of those inoculated without the test article/material. In both cases, inhibitory substances must be neutralized or their effect otherwise countered, by an appropriate method, for example, by passage in substrates not containing inhibitors or dilution in a larger volume of medium, before the test. If dilution is used, larger medium volumes may be used or the inoculums' volume may be divided among several 100-mL flasks. The effectiveness of the neutralization or other process is checked by repeating the test for inhibitory substances after neutralization.

Test for Mycoplasma in the Test Article/Material

Inoculate no less than 10 mL of the test article/material per 100 mL of each liquid medium. If a significant pH change occurs upon the addition of the test article/material, the liquid medium is restored to its original pH value by the addition of a sterile solution of either sodium hydroxide or hydrochloric acid. Inoculate 0.2 mL of the test article/material on each plate of each solid medium. Incubate liquid media for 20–21 days. Incubate solid media for not less than 14 days, except those plates corresponding to the 20–21 day subculture, which are incubated for 7 days. Concurrently, incubate an uninoculated 100-mL portion of each liquid medium and agar plate, as a negative control. On days 2–4 after inoculation, subculture each liquid medium by inoculating 0.2 mL on at least 1 plate of each solid medium. Repeat the procedure between days 6 and 8, again between days 13 and 15, and again between days 19 and 21 of the test. Observe the liquid media every 2 or 3 days and if a color change occurs, subculture. If a liquid medium shows bacterial or fungal contamination, the test is invalid. The test is valid if at least 1 plate per medium and per inoculation day can be read. Include in the test positive controls prepared by inoculation of not more than 100 cfu of at least 1 test microorganism on agar medium or into broth medium. Where the test for Mycoplasmas is carried out regularly, it is recommended to use the test microorganisms in regular rotation. The test microorganisms used are those listed under *Choice of Media*. Incubate broths and plates in a humidified atmosphere with microaerophilic conditions (5%–10% CO_2).

Interpretation of Results

At the end of the prescribed incubation period, examine all inoculated solid media for the presence of Mycoplasma colonies. The product complies with the test if growth of typical Mycoplasma colonies has not occurred. The product does not comply with the test if growth of typical Mycoplasma colonies has occurred on any of the solid media. The test is invalid if 1 or more of the positive controls do not show growth of Mycoplasmas on at least 1 subculture plate. The test is invalid if 1 or more of the negative controls show growth of Mycoplasmas. If suspect colonies are observed, use a suitable validated method to determine whether they are due to Mycoplasmas.

Recommended Solutions and Media for the Culture Method

NOTE—This section is provided for information.

SOLUTIONS

Beef Heart Infusion Broth

Beef heart (for preparation of the infusion)	500 g
Peptone	10 g
Sodium chloride	5 g

Beef Heart Infusion Broth *(Continued)*

Distilled water	to 1000 mL

Essential Vitamins

Biotin	100 mg
Calcium pantothenate	100 mg
Choline chloride	100 mg
Folic acid	100 mg
i-Inositol	200 mg
Nicotinamide	100 mg
Pyridoxal hydrochloride	100 mg
Riboflavine	10 mg
Thiamine hydrochloride	100 mg
Distilled water	to 1000 mL

Agar, Purified

A highly refined agar for use in microbiology and immunology, prepared by an ion-exchange procedure that results in a product having superior purity, clarity, and gel strength. It contains the following ingredients:	
Water	12.2%
Ash	1.5%
Acid-insoluble ash	0.2%
Chlorine	0
Phosphate (calculated as P_2O_5)	0.3%
Total nitrogen	0.3%
Copper	8 ppm
Iron	170 ppm
Calcium	0.28%
Magnesium	0.32%

Hanks' Balanced Salt Solution (modified)

Sodium chloride	6.4 g
Potassium chloride	0.32 g
Magnesium sulphate heptahydrate	0.08 g
Magnesium chloride hexahydrate	0.08 g
Calcium chloride, anhydrous	0.112 g
Disodium hydrogen phosphate dihydrate	0.0596 g
Potassium dihydrogen phosphate, anhydrous	0.048 g
Distilled water	to 800 mL

Brain Heart Infusion

Calf-brain infusion	200 g
Beef-heart infusion	250 g
Proteose peptone	10 g
Glucose monohydrate	2 g
Sodium chloride	5 g
Disodium hydrogen phosphate, anhydrous	2.5 g
Distilled water	to 1000 mL

PPLO Broth

Beef-heart infusion	50 g
Peptone	10 g
Sodium chloride	5 g
Distilled water	to 1000 mL

MEDIA

The following media are recommended. Other media may be used, provided they meet the criteria given in the sections *Choice of Culture Media, Incubation Conditions, Nutritive Properties,* and *Inhibitory Substances.*

Hayflick Media
(Recommended for the general detection of Mycoplasmas)

Liquid Medium	
Beef heart infusion broth	90.0 mL
Horse serum (unheated)	20.0 mL
Yeast extract (250 g/L) (fresh yeast extract is recommended)	10.0 mL
Phenol red (0.6 g/L solution)	5.0 mL
Penicillin (20,000 IU/mL)	0.25 mL
Deoxyribonucleic acid (2 g/L solution)	1.2 mL
Adjust to a pH of 7.8	
Solid Medium	
Prepare as described above replacing beef heart infusion broth by beef heart infusion agar containing 15 g/L of agar.	

Frey Media
(Recommended for the detection of *M. synoviae*)

Liquid Medium	
Beef heart infusion broth	90.0 mL
Essential vitamins	0.025 mL
Glucose monohydrate (500 g/L solution)	2.0 mL
Swine serum (inactivated at 56° for 30 min)	12.0 mL
β-Nicotinamide adenine dinucleotide (10 g/L solution)	1.0 mL
Cysteine hydrochloride (10 g/L solution)	1.0 mL
Phenol red (0.6 g/L solution)	5.0 mL
Penicillin (20,000 IU/mL)	0.25 mL
Mix the solutions of β-nicotinamide adenine dinucleotide and cysteine hydrochloride and after 10 min add to the other ingredients. Adjust to a pH of 7.8.	
Solid Medium	
Beef heart infusion broth	90.0 mL
Agar, purified	1.4 g
Adjust to pH 7.8, sterilize by autoclaving then add:	
Essential vitamins	0.025 mL
Glucose monohydrate (500 g/L solution)	2.0 mL
Swine serum (unheated)	12.0 mL
β-Nicotinamide adenine dinucleotide (10 g/L solution)	1.0 mL
Cysteine hydrochloride (10 g/L solution)	1.0 mL
Phenol red (0.6 g/L solution)	5.0 mL
Penicillin (20,000 IU/mL)	0.25 mL

Friis Media
(Recommended for the detection of nonavian Mycoplasmas)

Liquid Medium	
Hanks' balanced salt solution (modified)	800 mL
Distilled water	67 mL
Brain heart infusion	135 mL
PPLO Broth	248 mL
Yeast extract (170 g/L)	60 mL
Bacitracin	250 mg
Meticillin	250 mg
Phenol red (5 g/L)	4.5 mL
Horse serum	165 mL
Swine serum	165 mL
Adjust to a pH of 7.40–7.45	
Solid Medium	
Hanks' balanced salt solution (modified)	200 mL
DEAE-dextran	200 mg
Agar, purified	15.65 g

Friis Media
(Recommended for the detection of nonavian Mycoplasmas) *(Continued)*

Mix well and sterilize by autoclaving. Cool to 100°. Add to 1740 mL of *Liquid Medium* as described above.

INDICATOR CELL CULTURE METHOD

Cell cultures are stained with a fluorescent dye that binds to DNA. Mycoplasmas are detected by their characteristic particulate or filamentous pattern of fluorescence on the cell surface and, if contamination is heavy, in surrounding areas. Mitochondria in the cytoplasm may be stained but are readily distinguished from Mycoplasmas. For viral suspensions, if the interpretation of results is affected by marked cytopathic effects, neutralize the virus using a specific antiserum that has no inhibitory effects on Mycoplasmas, or use a cell culture substrate that does not allow growth of the virus. To demonstrate the absence of inhibitory effects of serum, carry out the positive control tests in the presence and absence of the antiserum.

Verification of the Substrate

Use Vero cells or equivalent cell culture (for example, the production cell line) that is equivalent in effectiveness for detecting Mycoplasmas. Test the effectiveness of the cells to be used by applying the procedure shown below and inoculating not more than 100 cfu or ccu microorganisms of suitable reference strains of *M. hyorhinis* and *M. orale.* The cells are suitable if both reference strains are detected. The indicator cells must be subcultured without an antibiotic before use in the test.

Test Method

NOTE—The following is provided for information.

SOLUTIONS

Phosphate Buffered Saline

2.0 M Monobasic Potassium Phosphate—Dissolve 13.61 g of anhydrous monobasic potassium phosphate in 50 mL of water.

2.0 M Dibasic Potassium Phosphate—Dissolve 17.42 g of anhydrous dibasic potassium phosphate in 50 mL of water.

Phosphate Buffered Saline Solution (pH 7.4)—Combine 3.6 mL of *2.0 M Monobasic Potassium Phosphate,* 16.4 mL of *2.0 M Dibasic Potassium Phosphate,* 8 g of sodium chloride, and 1 L of water. Mix thoroughly. Adjust the pH if necessary.

Bisbenzimide Stock Solution—Dissolve 5 mg of bisbenzimide in water, and dilute with the same solvent to 100 mL. Store in the dark.

Bisbenzimide Working Solution—Immediately before use, dilute 100 µL of *Bisbenzimide Stock Solution* with *Phosphate Buffered Saline Solution (pH 7.4)* to 100 mL.

Phosphate-Citrate Buffer Solution pH 5.5—Mix 56.85 mL of a 28.4-g/L solution of anhydrous disodium hydrogen phosphate and 43.15 mL of a 21-g/L solution of citric acid.

METHOD

1. Seed the indicator cell culture at a suitable density (for example, 2×10^4 to 2×10^5 cells/mL, 4×10^3 to 2.5×10^4 cells/cm^2) that will yield confluence after 3 days of growth. Inoculate 1 mL of the product to be examined into the cell culture vessel, and incubate at 36 ± 1°.
2. After at least 3 days of incubation, when the cells have grown to confluence, make a subculture on cover slips in suitable containers or on some other surface (for example, chambered slides) suitable for the test procedure. Seed the cells at low density so that they reach 50% confluence after 3–5 days of incubation. Complete confluence impairs visualization of Mycoplasmas after staining and must be avoided.
3. Remove the medium and rinse the indicator cells with phosphate buffered saline, pH 7.4, then add a suitable fixing solution (a freshly prepared mixture of 1 volume of acetic acid, glacial, TS and 3 volumes of methanol, is suitable when bisbenzimide is used for staining).
4. Remove the fixing solution and wash the cells with sterile Purified Water. Dry the slides completely if they are to be stained more than 1 hour later (particular care is needed for staining of slides after drying owing to artifacts that may be produced).
5. Add a suitable DNA stain and allow standing for a suitable time (bisbenzimide working solution and a standing time of 10 minutes are suitable).
6. Remove the stain and rinse the monolayer with Purified Water.
7. Mount each coverslip, where applicable (a mixture of equal volumes of glycerol and *Phosphate-Citrate Buffer Solution pH 5.5* is suitable for mounting). Examine by fluorescence (for bisbenzimide stain a 330 nm/380 nm excitation filter and an LP 440 nm barrier filter are suitable) at 400× magnification or greater.

8. Compare the microscopic appearance of the test cultures with that of the negative and positive controls, examining for extranuclear fluorescence. Mycoplasmas produce pinpoints or filaments over the indicator cell cytoplasm. They may also produce pinpoints and filaments in the intercellular spaces. Multiple microscopic fields are examined according to the protocol established during validation.

Interpretation of Results

The product to be examined complies with the test if fluorescence typical of Mycoplasmas is not present. The test is invalid if the positive controls do not show fluorescence typical of Mycoplasmas. The test is invalid if the negative controls show fluorescence typical of Mycoplasmas.

⟨71⟩ STERILITY TESTS

General Chapters

•Portions of this general chapter have been harmonized with the corresponding texts of the European Pharmacopeia and/or the Japanese Pharmacopeia. Those portions that are not harmonized are marked with symbols (•,) to specify this fact.•

These Pharmacopeial procedures are not by themselves designed to ensure that a batch of product is sterile or has been sterilized. This is accomplished primarily by validation of the sterilization process or of the aseptic processing procedures.

The test is applied to substances, preparations, or articles which, according to the Pharmacopeia, are required to be sterile. However, a satisfactory result only indicates that no contaminating microorganism has been found in the sample examined under the conditions of the test.

PRECAUTIONS AGAINST MICROBIAL CONTAMINATION

The test for sterility is carried out under aseptic conditions. In order to achieve such conditions, the test environment has to be adapted to the way in which the sterility test is performed. The precautions taken to avoid contamination are such that they do not affect any microorganisms that are to be revealed in the test. The working conditions in which the tests are performed are monitored regularly by appropriate sampling of the working area and by carrying out appropriate controls.

CULTURE MEDIA AND INCUBATION TEMPERATURES

Media for the test may be prepared as described below or equivalent commercial media may be used provided that they comply with the requirements of the *Growth Promotion Test of Aerobes, Anaerobes, and Fungi.*

The following culture media have been found to be suitable for the test for sterility. *Fluid Thioglycollate Medium* is primarily intended for the culture of anaerobic bacteria. However, it will also detect aerobic bacteria. *Soybean–Casein Digest Medium* is suitable for the culture of both fungi and aerobic bacteria.

Fluid Thioglycollate Medium

L-Cystine	0.5 g
Sodium Chloride	2.5 g
Dextrose Monohydrate/Anhydrous	5.5/5.0 g
Agar	0.75 g
Yeast Extract (water-soluble)	5.0 g
Pancreatic Digest of Casein	15.0 g
Sodium Thioglycollate	0.5 g
or Thioglycolic Acid	0.3 mL
Resazurin Sodium Solution (1 in 1000), freshly prepared	1.0 mL
Purified Water	1000 mL

pH after sterilization: 7.1±0.2.

Mix the L-cystine, agar, sodium chloride, dextrose, yeast extract, and pancreatic digest of casein with the purified water, and heat until solution is effected. Dissolve the sodium thioglycollate or thioglycolic acid in the solution and, if necessary, add 1 N sodium hydroxide so that, after sterilization, the solution will have a pH of 7.1 ± 0.2. If filtration is necessary, heat the solution again without boiling, and filter while hot through moistened filter paper. Add the resazurin sodium solution, mix, and place the medium in suitable vessels that provide a ratio of surface to depth of medium such that not more than the upper half of the medium has undergone a color change indicative of oxygen uptake at the end of the incubation period. Sterilize using a validated process. If the medium is stored, store at a temperature between 2° and 25° in a sterile, airtight container. If more than the upper one-third of the medium has acquired a pink color, the medium may be restored once by heating the contain-

ers in a water-bath or in free-flowing steam until the pink color disappears and by cooling quickly, taking care to prevent the introduction of nonsterile air into the container. Do not use the medium for a longer storage period than has been validated.

Fluid Thioglycollate Medium is to be incubated at 30°–35°. For products containing a mercurial preservative that cannot be tested by the membrane filtration method, *Fluid Thioglycollate Medium* incubated at 20°–25° may be used instead of *Soybean–Casein Digest Medium* provided that it has been validated as described in *Growth Promotion Test of Aerobes, Anaerobes, and Fungi*. Where prescribed or justified and authorized, the following alternative thioglycollate medium might be used. Prepare a mixture having the same composition as that of the *Fluid Thioglycollate Medium*, but omitting the agar and the resazurin sodium solution. Sterilize as directed above. The pH after sterilization is 7.1 ± 0.2. Heat in a water bath prior to use and incubate at 30°–35° under anaerobic conditions.

Soybean–Casein Digest Medium

Pancreatic Digest of Casein	17.0 g
Papaic Digest of Soybean Meal	3.0 g
Sodium Chloride	5.0 g
Dibasic Potassium Phosphate	2.5 g
Dextrose Monohydrate/Anhydrous	2.5/2.3 g
Purified Water	1000 mL

pH after sterilization: 7.3±0.2.

Dissolve the solids in the Purified Water, heating slightly to effect a solution. Cool the solution to room temperature, and adjust the pH with 1 N sodium hydroxide so that, after sterilization, it will have a pH of 7.3 ± 0.2. Filter, if necessary to clarify, dispense into suitable containers, and sterilize using a validated procedure. Store at a temperature between 2° and 25° in a sterile well-closed container, unless it is intended for immediate use. Do not use the medium for a longer storage period than has been validated.

Soybean–Casein Digest Medium is to be incubated at 22.5 ± 2.5°.

•Media for Penicillins or Cephalosporins

Where sterility test media are to be used in the *Direct Inoculation of the Culture Medium*method under *Test for Sterility of the Product to be Examined*, modify the preparation of *Fluid Thioglycollate Medium* and the *Soybean–Casein Digest Medium* as follows. To the containers of each medium, transfer aseptically a quantity of β -lactamase sufficient to inactivate the amount of antibiotic in the specimen under test. Determine the quantity of β -lactamase required to inactivate the antibiotic by using a β -lactamase preparation that has been assayed previously for its penicillin- or cephalosporin-inactivating power. [NOTE—Supplemented β -lactamase media can also be used in the membrane filtration test.]

Alternatively (in an area completely separate from that used for sterility testing), confirm that an appropriate amount of β -lactamase is incorporated into the medium, following either method under *Method Suitability Test*, using less than 100 colony-forming units (cfu) of *Staphylococcus aureus* (see *Table 1*) as the challenge. Typical microbial growth of the inoculated culture must be observed as a confirmation that the β -lactamase concentration is appropriate.•

Table 1. Strains of the Test Microorganisms Suitable for Use in the Growth Promotion Test and the Method Suitability Test

Aerobic bacteria	
Staphylococcus aureus	ATCC 6538, CIP 4.83, NCTC 10788, NCIMB 9518, NBRC 13276
Bacillus subtilis	ATCC 6633, CIP 52.62, NCIMB 8054, NBRC 3134
Pseudomonas aeruginosa•[1]•	ATCC 9027, NCIMB 8626, CIP 82.118, NBRC 13275
Anaerobic bacterium	
Clostridium sporogenes•[2]•	ATCC 19404, CIP 79.3, NCTC 532 or ATCC 11437, NBRC 14293
Fungi	
Candida albicans	ATCC 10231, IP 48.72, NCPF 3179, NBRC 1594
Aspergillus brasiliensis (*Aspergillus Niger*)	ATCC 16404, IP 1431.83, IMI 149007, NBRC 9455

•[1] An alternative microorganism is *Kocuria rhizophila (Micrococcus luteus)* ATCC 9341.•

•[2] An alternative to *Clostridium sporogenes*, when a nonspore-forming microorganism is desired, is *Bacteroides vulgatus* (ATCC 8482).•

The media used comply with the following tests, carried out before, or in parallel, with the test on the product to be examined.

Sterility

Incubate portions of the media for 14 days. No growth of microorganisms occurs.

Growth Promotion Test of Aerobes, Anaerobes, and Fungi

Test each lot of ready-prepared medium and each batch of medium prepared either from dehydrated medium or from ingredients. Suitable strains of microorganisms are indicated in *Table 1*.

Inoculate portions of *Fluid Thioglycollate Medium* with a small number (not more than 100 cfu) of the following microorganisms, using a separate portion of medium for each of the following species of microorganism: *Clostridium sporogenes*, *Pseudomonas aeruginosa*, and *Staphylococcus aureus*. •Inoculate portions of alternative thioglycollate medium with a small number (not more than 100 cfu) of *Clostridium sporogenes*.• Inoculate portions of *Soybean–Casein Digest Medium* with a small number (not more than 100 cfu) of the following microorganisms, using a separate portion of medium for each of the following species of microorganism: *Aspergillus brasiliensis*, *Bacillus subtilis*, and *Candida albicans*. Incubate for not more than 3 days in the case of bacteria and not more than 5 days in the case of fungi. Seed lot culture maintenance techniques (seed-lot systems) are used so that the viable microorganisms used for inoculation are not more than five passages removed from the original master seed-lot.

The media are suitable if a clearly visible growth of the microorganisms occurs.

•DILUTING AND RINSING FLUIDS FOR MEMBRANE FILTRATION

Fluid A

PREPARATION

Dissolve 1 g of peptic digest of animal tissue in water to make 1 L, filter or centrifuge to clarify, if necessary, and adjust to a pH of 7.1 ± 0.2. Dispense into containers, and sterilize using a validated process.

PREPARATION FOR PENICILLINS OR CEPHALOSPORINS

Aseptically add to the above *Preparation*, if necessary, a quantity of sterile β-lactamase sufficient to inactivate any residual antibiotic activity on the membranes after the solution of the test specimen has been filtered (see *Media for Penicillins or Cephalosporins*).

Fluid D

To each L of *Fluid A* add 1 mL of polysorbate 80, adjust to a pH of 7.1 ± 0.2, dispense into containers, and sterilize using a validated process. Use this fluid for articles containing lecithin or oil, or for devices labeled as "sterile pathway."

Fluid K

Dissolve 5.0 g of peptic digest of animal tissue, 3.0 g of beef extract, and 10.0 g of polysorbate 80 in water to make 1 L. Adjust the pH to obtain, after sterilization, a pH of 6.9 ± 0.2. Dispense into containers, and sterilize using a validated process.•

METHOD SUITABILITY TEST

Carry out a test as described below under *Test for Sterility of the Product to be Examined* using exactly the same methods, except for the following modifications.

Membrane Filtration

After transferring the content of the container or containers to be tested to the membrane, add an inoculum of a small number of viable microorganisms (not more than 100 cfu) to the final portion of sterile diluent used to rinse the filter.

Direct Inoculation

After transferring the contents of the container or containers to be tested (for catgut and other surgical sutures for veterinary use: strands) to the culture medium, add an inoculum of a small number of viable microorganisms (not more than 100 cfu) to the medium.

In both cases use the same microorganisms as those described above under *Growth Promotion Test of Aerobes, Anaerobes, and Fungi*. Perform a growth promotion test as a positive control. Incubate all the containers containing medium for not more than 5 days.

If clearly visible growth of microorganisms is obtained after the incubation, visually comparable to that in the control vessel without product, either the product possesses no antimicrobial activity under the conditions of the test or such activity has been satisfactorily eliminated. The test for sterility may then be carried out without further modification.

If clearly visible growth is not obtained in the presence of the product to be tested, visually comparable to that in the control vessels without product, the product possesses antimicrobial activity that has not been satisfactorily eliminated under the conditions of the test. Modify the conditions in order to eliminate the antimicrobial activity, and repeat the *Method Suitability Test*.

This method suitability is performed (a) when the test for sterility has to be carried out on a new product; and (b) whenever there is a change in the experimental conditions of the test. The method suitability may be performed simultaneously with the *Test for Sterility of the Product to be Examined*.

TEST FOR STERILITY OF THE PRODUCT TO BE EXAMINED

♦Number of Articles to Be Tested

Unless otherwise specified elsewhere in this chapter or in the individual monograph, test the number of articles specified in *Table 3*. If the contents of each article are of sufficient quantity (see *Table 2*), they may be divided so that equal appropriate portions are added to each of the specified media. [NOTE—Perform sterility testing employing two or more of the specified media.] If each article does not contain sufficient quantities for each medium, use twice the number of articles indicated in *Table 3*.♦

Table 2. Minimum Quantity to be Used for Each Medium

Quantity per Container	Minimum Quantity to be Used (unless otherwise justified and authorized)
Liquids	
Less than 1 mL	The whole contents of each container
1–40 mL	Half the contents of each container, but not less than 1 mL
Greater than 40 mL, and not greater than 100 mL	20 mL
Greater than 100 mL	10% of the contents of the container, but not less than 20 mL
Antibiotic liquids	1 mL
Insoluble preparations, creams, and ointments to be suspended or emulsified	Use the contents of each container to provide not less than 200 mg
Solids	
Less than 50 mg	The whole contents of each container
50 mg or more, but less than 300 mg	Half the contents of each container, but not less than 50 mg
300 mg–5 g	150 mg
Greater than 5 g	500 mg
Catgut and other surgical sutures for veterinary use	3 sections of a strand (each 30-cm long)
♦Surgical dressing/cotton/gauze (in packages)	100 mg per package
Sutures and other individually packaged single-use material	The whole device
Other medical devices	The whole device, cut into pieces or disassembled.♦

Table 3. Minimum Number of Articles to be Tested in Relation to the Number of Articles in the Batch

Number of Items in the Batch*	Minimum Number of Items to be Tested for Each Medium (unless otherwise justified and authorized)**
Parenteral preparations	
Not more than 100 containers	10% or 4 containers, whichever is the greater
More than 100 but not more than 500 containers	10 containers
More than 500 containers	2% or 20 containers, whichever is less
♦*For large-volume parenterals*	2% or 10 containers, whichever is less
Antibiotic solids	
Pharmacy bulk packages (<5 g)	20 containers
Pharmacy bulk packages (≥5 g)	6 containers
Bulks and blends	See *Bulk solid products*.♦
Ophthalmic and other noninjectable preparations	
Not more than 200 containers	5% or 2 containers, whichever is the greater

* If the batch size is unknown, use the maximum number of items prescribed.

** If the contents of one container are enough to inoculate the two media, this column gives the number of containers needed for both the media together.

Table 3. Minimum Number of Articles to be Tested in Relation to the Number of Articles in the Batch *(Continued)*

Number of Items in the Batch*	Minimum Number of Items to be Tested for Each Medium (unless otherwise justified and authorized)**
More than 200 containers	10 containers
If the product is presented in the form of single-dose containers, apply the scheme shown above for preparations for parenteral use.	
Catgut and other surgical sutures for veterinary use	2% or 5 packages, whichever is the greater, up to a maximum total of 20 packages
•Not more than 100 articles	10% or 4 articles, whichever is greater
More than 100, but not more than 500 articles	10 articles
More than 500 articles	2% or 20 articles, whichever is less•
Bulk solid products	
Up to 4 containers	Each container
More than 4 containers, but not more than 50 containers	20% or 4 containers, whichever is greater
More than 50 containers	2% or 10 containers, whichever is greater

* If the batch size is unknown, use the maximum number of items prescribed.
** If the contents of one container are enough to inoculate the two media, this column gives the number of containers needed for both the media together.

The test may be carried out using the technique of *Membrane Filtration* or by *Direct Inoculation of the Culture Medium* with the product to be examined. Appropriate negative controls are included. The technique of membrane filtration is used whenever the nature of the product permits; that is, for filterable aqueous preparations, for alcoholic or oily preparations, and for preparations miscible with, or soluble in, aqueous or oily solvents, provided these solvents do not have an antimicrobial effect in the conditions of the test.

Membrane Filtration

Use membrane filters having a nominal pore size not greater than 0.45 µm, in which the effectiveness to retain microorganisms has been established. Cellulose nitrate filters, for example, are used for aqueous, oily, and weakly alcoholic solutions; and cellulose acetate filters, for example, are used for strongly alcoholic solutions. Specially adapted filters may be needed for certain products (e.g., for antibiotics).

The technique described below assumes that membranes about 50 mm in diameter will be used. If filters of a different diameter are used, the volumes of the dilutions and the washings should be adjusted accordingly. The filtration apparatus and membrane are sterilized by appropriate means. The apparatus is designed so that the solution to be examined can be introduced and filtered under aseptic conditions: it permits the aseptic removal of the membrane for transfer to the medium, or it is suitable for carrying out the incubation after adding the medium to the apparatus itself.

AQUEOUS SOLUTIONS

If appropriate, transfer a small quantity of a suitable, sterile diluent such as •*Fluid A* (see *Diluting and Rinsing Fluids for Membrane Filtration*)• onto the membrane in the apparatus and filter. The diluent may contain suitable neutralizing substances and/or appropriate inactivating substances, for example, in the case of antibiotics.

Transfer the contents of the container or containers to be tested to the membrane or membranes, if necessary, after diluting to the volume used in the *Method Suitability Test* with the chosen sterile diluent, but using not less than the quantities of the product to be examined prescribed in *Tables 2* and *3*. Filter immediately. If the product has antimicrobial properties, wash the membrane not less than three times by filtering through it each time the volume of the chosen sterile diluent used in the *Method Suitability Test.* Do not exceed a washing cycle of five times 100 mL per filter, even if during method suitability it has been demonstrated that such a cycle does not fully eliminate the antimicrobial activity. Transfer the whole membrane to the culture medium or cut it aseptically into two equal parts, and transfer one half to each of two suitable media. Use the same volume of each medium as in the *Method Suitability Test.* Alternatively, transfer the medium onto the membrane in the apparatus. Incubate the media for not less than 14 days.

SOLUBLE SOLIDS

Use for each medium not less than the quantity prescribed in *Tables 2* and *3* of the product dissolved in a suitable solvent, such as the solvent provided with the preparation, Sterile Water for Injection, sterile saline, or a suitable sterile solution such as •*Fluid A* (*Diluting and Rinsing Fluids for Membrane Filtration*)• and proceed with the test as described above for *Aqueous Solutions* using a membrane appropriate to the chosen solvent.

OILS and OILY SOLUTIONS

Use for each medium not less than the quantity of the product prescribed in *Tables 2* and *3*. Oils and oily solutions of sufficiently low viscosity may be filtered without dilution through a dry membrane. Viscous oils may be diluted as necessary with a suitable sterile diluent such as isopropyl myristate shown not to have antimicrobial activity in the conditions of the test. Allow the oil to penetrate the membrane by its own weight, and then filter, applying the pressure or suction gradually. Wash the membrane at least three times by filtering through it each time about 100 mL of a suitable sterile solution such as •*Fluid A* (see *Diluting and Rinsing Fluids for Membrane Filtration*)• containing a suitable emulsifying agent at a concentration shown to be appropriate in the *Method Suitability Test*, for example polysorbate 80 at a concentration of 10 g per L •(*Fluid K*)•. Transfer the membrane or membranes to the culture medium or media, or vice versa, as described above for *Aqueous Solutions*, and incubate at the same temperatures and for the same times.

OINTMENTS and CREAMS

Use for each medium not less than the quantities of the product prescribed in *Tables 2* and *3*. Ointments in a fatty base and emulsions of the water-in-oil type may be diluted to 1% in isopropyl myristate as described above, by heating, if necessary, to not more than 40°. In exceptional cases it may be necessary to heat to not more than 44°. Filter as rapidly as possible, and proceed as described above for *Oils and Oily Solutions*.

•PREFILLED SYRINGES

For prefilled syringes without attached sterile needles, expel the contents of each syringe into one or two separate membrane filter funnels or into separate pooling vessels prior to transfer. If a separate sterile needle is attached, directly expel the syringe contents as indicated above, and proceed as directed for *Aqueous Solutions*. Test the sterility of the needle, using *Direct Inoculation* under *Method Suitability Test*.

SOLIDS FOR INJECTION OTHER THAN ANTIBIOTICS

Constitute the test articles as directed on the label, and proceed as directed for *Aqueous Solutions* or *Oils and Oily Solutions*, whichever applies. [NOTE—If necessary, excess diluent can be added to aid in the constitution and filtration of the constituted test article.]

ANTIBIOTIC SOLIDS FOR INJECTION

Pharmacy Bulk Packages, <5 g—From each of 20 containers, aseptically transfer about 300 mg of solids, into a sterile 500-mL conical flask, dissolve in about 200 mL of *Fluid A* (see *Diluting and Rinsing Fluids for Membrane Filtration*), and mix; or constitute, as directed in the labeling, each of 20 containers and transfer a quantity of liquid or suspension, equivalent to about 300 mg of solids, into a sterile 500-mL conical flask, dissolve in about 200 mL of *Fluid A*, and mix. Proceed as directed for *Aqueous Solutions* or *Oils and Oily Solutions*, whichever applies.

Pharmacy Bulk Packages, ≥5 g—From each of 6 containers, aseptically transfer about 1 g of solids into a sterile 500-mL conical flask, dissolve in about 200 mL of *Fluid A*, and mix; or constitute, as directed in the labeling, each of 6 containers and transfer a quantity of liquid, equivalent to about 1 g of solids, into a sterile 500-mL conical flask, dissolve in about 200 mL of *Fluid A*, and mix. Proceed as directed for *Aqueous Solutions*.

ANTIBIOTIC SOLIDS, BULKS, and BLENDS

Aseptically remove a sufficient quantity of solids from the appropriate amount of containers (see *Table 2*), mix to obtain a composite, equivalent to about 6 g of solids, and transfer to a sterile 500-mL conical flask. Dissolve in about 200 mL of *Fluid A*, and mix. Proceed as directed for *Aqueous Solutions*.

STERILE AEROSOL PRODUCTS

For fluid products in pressurized aerosol form, freeze the containers in an alcohol-dry ice mixture at least at –20° for about 1 hour. If feasible, allow the propellant to escape before aseptically opening the container, and transfer the contents to a sterile pooling vessel. Add 100 mL of *Fluid D* to the pooling vessel, and mix gently. Proceed as directed for *Aqueous Solutions* or *Oils and Oily Solutions*, whichever applies.

DEVICES WITH PATHWAYS LABELED STERILE

Aseptically pass not less than 10 pathway volumes of *Fluid D* through each device tested. Collect the fluids in an appropriate sterile vessel, and proceed as directed for *Aqueous Solutions* or *Oils and Oily Solutions*, whichever applies.

In the case of sterile, empty syringes, draw sterile diluent into the barrel through the sterile needle, if attached, or through a sterile needle attached for the purpose of the test, and express the contents into a sterile pooling vessel. Proceed as directed above.•

Direct Inoculation of the Culture Medium

Transfer the quantity of the preparation to be examined prescribed in *Tables 2* and *3* directly into the culture medium so that the volume of the product is not more than 10% of the volume of the medium, unless otherwise prescribed.

If the product to be examined has antimicrobial activity, carry out the test after neutralizing this with a suitable neutralizing substance or by dilution in a sufficient quantity of culture medium. When it is necessary to use a large volume of the product, it may be preferable to use a concentrated culture medium prepared in such a way that it takes into account the subsequent dilution. Where appropriate, the concentrated medium may be added directly to the product in its container.

OILY LIQUIDS

Use media to which have been added a suitable emulsifying agent at a concentration shown to be appropriate in the *Method Suitability Test,* for example polysorbate 80 at a concentration of 10 g per L.

OINTMENTS and CREAMS

Prepare by diluting to about 1 in 10 by emulsifying with the chosen emulsifying agent in a suitable sterile diluent such as •*Fluid A* (see *Diluting and Rinsing Fluids for Membrane Filtration*).• Transfer the diluted product to a medium not containing an emulsifying agent.

Incubate the inoculated media for not less than 14 days. Observe the cultures several times during the incubation period. Shake cultures containing oily products gently each day. However, when *Fluid Thioglycollate Medium* is used for the detection of anaerobic microorganisms, keep shaking or mixing to a minimum in order to maintain anaerobic conditions.

CATGUT and OTHER SURGICAL SUTURES FOR VETERINARIAN USE

Use for each medium not less than the quantities of the product prescribed in *Tables 2* and *3*. Open the sealed package using aseptic precautions, and remove three sections of the strand for each culture medium. Carry out the test on three sections, each 30-cm long, which have been cut off from the beginning, the center, and the end of the strand. Use whole strands from freshly opened cassette packs. Transfer each section of the strand to the selected medium. Use sufficient medium to cover adequately the material to be tested (20 mL to 150 mL).

•SOLIDS

Transfer a quantity of the product in the form of a dry solid (or prepare a suspension of the product by adding sterile diluent to the immediate container), corresponding to not less than the quantity indicated in *Tables 2* and *3*. Transfer the material so obtained to 200 mL of *Fluid Thioglycollate Medium,* and mix. Similarly, transfer the same quantity to 200 mL of *Soybean–Casein Digest Medium,* and mix. Proceed as directed above.

PURIFIED COTTON, GAUZE, SURGICAL DRESSINGS, and RELATED ARTICLES

From each package of cotton, rolled gauze bandage, or large surgical dressings being tested, aseptically remove two or more portions of 100- to 500-mg each from the innermost part of the sample. From individually packaged, single-use materials, aseptically remove the entire article. Immerse the portions or article in each medium, and proceed as directed above.

STERILE DEVICES

Articles can be immersed intact or disassembled. To ensure that device pathways are also in contact with the media, immerse the appropriate number of units per medium in a volume of medium sufficient to immerse the device completely, and proceed as directed above. For extremely large devices, immerse those portions of the device that are to come into contact with the patient in a volume of medium sufficient to achieve complete immersion of those portions.

For catheters where the inside lumen and outside are required to be sterile, either cut them into pieces such that the medium is in contact with the entire lumen or fill the lumen with medium, and then immerse the intact unit.•

OBSERVATION AND INTERPRETATION OF RESULTS

At intervals during the incubation period and at its conclusion, examine the media for macroscopic evidence of microbial growth. If the material being tested renders the medium turbid so that the presence or absence of microbial growth cannot be readily determined by visual examination, 14 days after the beginning of incubation transfer portions (each not less than 1 mL) of the medium to fresh vessels of the same medium, and then incubate the original and transfer vessels for not less than 4 days.

If no evidence of microbial growth is found, the product to be examined complies with the test for sterility. If evidence of microbial growth is found, the product to be examined does not comply with the test for sterility, unless it can be clearly demonstrated that the test was invalid for causes unrelated to the product to be examined. The test may be considered invalid only if one or more of the following conditions are fulfilled:

a. The data of the microbiological monitoring of the sterility testing facility show a fault.
b. A review of the testing procedure used during the test in question reveals a fault.
c. Microbial growth is found in the negative controls.
d. After determination of the identity of the microorganisms isolated from the test, the growth of this species (or these species) may be ascribed unequivocally to faults with respect to the material and or the technique used in conducting the sterility test procedure.

If the test is declared to be invalid, it is repeated with the same number of units as in the original test. If no evidence of microbial growth is found in the repeat test, the product examined complies with the test for sterility. If microbial growth is found in the repeat test, the product examined does not comply with the test for sterility.

APPLICATION OF THE TEST TO PARENTERAL PREPARATIONS, OPHTHALMIC, AND OTHER NONINJECTABLE PREPARATIONS REQUIRED TO COMPLY WITH THE TEST FOR STERILITY

When using the technique of membrane filtration, use, whenever possible, the whole contents of the container, but not less than the quantities indicated in *Table 2,* diluting where necessary to about 100 mL with a suitable sterile solution, such as •*Fluid A* (see *Diluting and Rinsing Fluids for Membrane Filtration*).•

When using the technique of direct inoculation of media, use the quantities shown in *Table 2,* unless otherwise justified and authorized. The tests for bacterial and fungal sterility are carried out on the same sample of the product to be examined. When the volume or the quantity in a single container is insufficient to carry out the tests, the contents of two or more containers are used to inoculate the different media.

MINIMUM NUMBER OF ITEMS TO BE TESTED

The minimum number of items to be tested in relation to the size of the batch is given in *Table 3.*

Biological Tests and Assays

⟨81⟩ ANTIBIOTICS—MICROBIAL ASSAYS

INTRODUCTION AND GENERAL INFORMATION

The activity (potency) of antibiotics can be demonstrated by their inhibitory effect on microorganisms under suitable conditions. A reduction in antimicrobial activity may not be adequately demonstrated by chemical methods. This chapter summarizes procedures for the antibiotics recognized in the *United States Pharmacopeia* (*USP*) for which the microbiological assay is the standard analytical method.

Two general techniques are employed: the cylinder-plate (or plate) assay and the turbidimetric (or tube) assay. *Table 1* lists all the antibiotics that contain microbial assays and specifies the type of assay (cylinder-plate or turbidimetric).

Table 1

Antibiotic	Type of Assay
Amphotericin B	Cylinder-plate
Bacitracin	Cylinder-plate

Table 1 *(Continued)*

Antibiotic	Type of Assay
Bleomycin	Cylinder-plate
Capreomycin	Turbidimetric
Carbenicillin	Cylinder-plate
Chloramphenicol	Turbidimetric
Chlortetracycline	Turbidimetric
Cloxacillin	Cylinder-plate
Colistemethate	Cylinder-plate
Colistin	Cylinder-plate
Dihydrostreptomycin	Cylinder-plate
	Turbidimetric
Erythromycin	Cylinder-plate
Gentamicin	Cylinder-plate
Gramicidin	Turbidimetric
Nafcillin	Cylinder-plate
Natamycin	Cylinder-plate
Neomycin	Cylinder-plate
	Turbidimetric
Novobiocin	Cylinder-plate
Nystatin	Cylinder-plate
Oxytetracycline	Turbidimetric
Paromomycin	Cylinder-plate
Penicillin G	Cylinder-plate
Polymyxin B	Cylinder-plate
Sisomicin	Cylinder-plate
Tetracycline	Turbidimetric
Thiostrepton	Turbidimetric
Troleandomycin	Turbidimetric
Tylosin	Turbidimetric
Vancomycin	Cylinder-plate

[NOTE—Perform all procedures under conditions designed to avoid extrinsic microbial contamination. Take adequate safety precautions while performing these assays because of possible allergies to drugs and because live cultures of organisms are used in the procedures.]

Cylinder-plate assay: The cylinder-plate assay depends on diffusion of the antibiotic from a vertical cylinder through a solidified agar layer in a Petri dish or plate. The growth of the specific microorganisms inoculated into the agar is prevented in a circular area or *zone* around the cylinder containing the solution of the antibiotic.

Turbidimetric assay: The turbidimetric assay depends on the inhibition of growth of a microorganism in a uniform solution of the antibiotic in a fluid medium that is favorable to the growth of the microorganism in the absence of the antibiotic.

Units and Reference Standards: The potency of antibiotics is designated in either units (U) or µg of activity. In each case the unit or µg of antibiotic activity was originally established against a United States Federal Master Standard for that antibiotic. The corresponding USP Reference Standard is calibrated in terms of the master standard.

Originally, an antibiotic selected as a reference standard was thought to consist entirely of a single chemical entity and was therefore assigned a potency of 1000 µg/mg. In several such instances, as the manufacturing and purification methods for particular antibiotics became more advanced, antibiotics containing more than 1000 µg of activity/mg became possible. Such antibiotics had an activity equivalent to a given number of µg of the original reference standard. In most instances, however, the µg of activity is exactly equivalent numerically to the µg (weight) of the pure substance. In some cases, such as those listed below, the µg of activity defined in terms of the original master standard is equal to a unit:

1. Where an antibiotic exists as the free base and in salt form and the µg of activity has been defined in terms of one of these forms
2. Where the antibiotic substance consists of a number of components that are chemically similar but differ in antibiotic activity
3. Where the potencies of a family of antibiotics are expressed in terms of a reference standard consisting of a single member which, however, might itself be heterogeneous

Do not assume that the µg of activity corresponds to the µg (weight) of the antibiotic substance.

Apparatus: Labware used for the storage and transfer of test dilutions and microorganisms must be sterile and free of interfering residues (see *Cleaning Glass Apparatus* ⟨1051⟩). Use a validated sterilization method, such as dry heat, steam, or radiation; or use sterile, disposable labware.

Temperature control: Thermostatic control is required in several stages of a microbial assay: when culturing a microorganism and preparing its inoculum, and during incubation in plate and tube assays. Refer to specific temperature requirements below for each type of assay.

Test organisms: The test organism for each antibiotic is listed in *Table 3* for the cylinder-plate assay and *Table 8* for the turbidimetric assay. The test organisms are specified by the American Type Culture Collection (ATCC) number.

In order to ensure acceptable performance of test organisms, store and maintain them properly. Establish the specific storage conditions during method validation or verification. Discard cultures if a change in the organism's characteristics is observed.

Prolonged storage: For prolonged storage, maintain test organisms in a suitable storage solution such as 50% fetal calf serum in broth, 10%–15% glycerol in tryptic soy broth, defribinated sheep blood, or skim milk. Prolonged-storage cultures are best stored in the freeze-dried state; temperatures of −60° or below are preferred; temperatures below −20° are acceptable.

Primary cultures: Prepare primary cultures by transferring test organisms from prolonged-storage vials onto appropriate media, and incubate under appropriate growth conditions. Store primary cultures at the appropriate temperature, usually 2°–8°, and discard after three weeks. A single primary culture can be used to prepare working cultures only for as many as seven days.

Working cultures: Prepare working cultures by transferring the primary culture onto appropriate solid media to obtain isolated colonies. Incubate working cultures under appropriate conditions to obtain satisfactory growth for preparation of test inocula. Prepare fresh working cultures for each test day.

Uncharacteristic growth or performance of a test organism: Use new stock cultures, primary cultures, or working cultures when a test organism shows uncharacteristic growth or performance.

Assay designs: Suitable experimental designs are key to increasing precision and minimizing bias. Control of the incubation parameters, temperature distribution and time, is critical for minimizing bias; it can be accomplished by staging the plates and racks as described for each assay.

Cylinder-plate assay: The comparisons are restricted to relationships between zone diameter measurements within plates, excluding the variation between plates. Individual plate responses are normalized on the basis of the relative zone size of the standard compared to the mean zone size of the standard across all plates.

Turbidimetric assay: To avoid systematic bias, place replicate tubes randomly in separate racks so that each rack contains one complete set of treatments. The purpose of this configuration is to minimize the influence of temperature distribution on the replicate samples. The turbidimetric assay, because of the configuration of the samples in test tube racks, is sensitive to slight variations in temperature. The influence of temperature variation can also be decreased by ensuring proper airflow or heat convection during incubation. At least three tubes for each sample and standard concentration (one complete set of samples) should be placed in a single rack. The comparisons are restricted to relationships between the observed turbidities within racks.

Potency considerations: Within the restrictions listed above, the recommended assay design employs a five-concentration standard curve and a single concentration of each sample preparation.

For the cylinder-plate assay, each plate includes only two treatments, the reference treatment (median level standard, i.e., S_3) and one of the other four concentrations of the standard (S_1, S_2, S_4, and S_5) or the sample (U_3). The concentration of the sample is an estimate based on the target concentration. The sample should be diluted to give a nominal concentration that is estimated to be equivalent to the median reference concentration (S_3) of the standard. The purpose of diluting to the median reference concentration is to ensure that the sample result will fall within the linear portion of the standard curve. The test determines the relative potency of U_3 against the standard curve. The sample (U_3) should have a relative potency of about 100%. The final potency of the sample is obtained by multiplying the U_3 result by the dilution factor.

An assay should be considered preliminary if the computed potency value of the sample is less than 80% or more than 125%. In this case, the results suggest that the sample concentration assumed during preparation of the sample stock solution was not correct. In such a case, one can adjust the assumed potency of the sample on the basis of the preliminary potency value and repeat the assay. Otherwise, the potency will be derived from a portion of the curve where the standard and sample responses will likely not be parallel.

Microbial determinations of potency are subject to inter-assay as well as intra-assay variables; therefore two or more independent assays are required for a reliable estimate of the potency of a given sample. Starting with separately prepared stock solutions and test dilutions of both the standard and the sample, perform additional assays of a given sample on a different day. The mean potency should include the results from all the valid independent assays. The number of assays required in order to achieve a reliable estimate of potency depends on the variability of the assay and the required maximum uncertainty for the potency estimate. The latter is assessed by the width of the confidence interval (refer to *Calculations, Confidence limits and combinations of assay calculations*). The combined result of a series of smaller, independent assays spread over a number of days is a more reliable estimate of potency than one from a single large assay with the same total number of plates or tubes. Note that additional assays or lower variability allows the product to meet tighter specification ranges. Reducing assay variability achieves the required confidence limit with fewer assays.

CYLINDER-PLATE METHOD

Temperature Control

Use appropriately qualified and calibrated equipment to obtain the temperature ranges specified in *Table 3*.

Apparatus

PLATES

Glass or disposable plastic Petri dishes (approximately 20 × 100 mm or other appropriate dimensions) with lids

CYLINDERS

Stainless steel or porcelain cylinders; 8 ± 0.1-mm o.d.; 6 ± 0.1-mm i.d.; 10 ± 0.1-mm high. [NOTE—Carefully clean cylinders to remove all residues; occasional cleaning in an acid bath, e.g., with about 2 N nitric acid or with chromic acid (see *Cleaning Glass Apparatus* ⟨1051⟩) is required.]

Standard Solutions

To prepare a stock solution, dissolve a suitable quantity of the USP Reference Standard of a given antibiotic, or the entire contents of a vial of USP Reference Standard, where appropriate, in the solvent specified in *Table 2*; and dilute to the specified concentration. Store at 2°–8°, and use within the period indicated. On the day of the assay, prepare from the stock solution five or more test dilutions, in which the successive solutions increase stepwise in concentration, usually in the ratio of 1:1.25. Use the final diluent specified such that the median has the concentration suggested in *Table 2*.

Sample Solutions

Assign an assumed potency per unit weight or volume to the sample. On the day of the assay prepare a stock solution in the same manner specified for the USP Reference Standard (*Table 2*). Dilute the sample stock solution in the specified final diluent to obtain a nominal concentration equal to the median concentration of the standard (S_3).

Table 2

	Stock Solution					Test Dilution	
Antibiotic	Initial Solvent	Initial Concentration	Further Diluent	Final Concentration	Use Within	Final Diluent	Median Concentration $(S_3)^{a,b}$
Amphotericin B[c,d]	Dimethyl sulfoxide	—	—	1 mg/mL	Same day	B.10[e]	1 µg/mL
Bacitracin[f]	0.01 N hydrochloric acid	—	—	100 U/mL	Same day	B.1[e]	1 U/mL
Bleomycin	B.16[e]	—	—	2 U/mL	14 days	B.16[e]	0.04 U/mL
Carbenicillin	B.1[e]	—	—	1 mg/mL	14 days	B.1[e]	20 µg/mL
Cloxacillin	B.1[e]	—	—	1 mg/mL	7 days	B.1[e]	5 µg/mL
Colistemethate[c]	Water	10 mg/mL	B.6[e]	1 mg/mL	Same day	B.6[e]	1 µg/mL
Colistin	Water	10 mg/mL	B.6[e]	1 mg/mL	14 days	B.6[e]	1 µg/mL
Dihydrostreptomycin[g]	B.3[e]	—	—	1 mg/mL	30 days	B.3[e]	1 µg/mL
Erythromycin	Methanol	10 mg/mL	B.3[e]	1 mg/mL	14 days	B.3[e]	1 µg/mL
Gentamicin	B.3[e]	—	—	1 mg/mL	30 days	B.3[e]	0.1 µg/mL
Nafcillin	B.1[e]	—	—	1 mg/mL	2 days	B.1[e]	2 µg/mL

[a] It is acceptable to adjust the median concentration to optimize zone sizes if the data remain in the linear range.
[b] µg in this column refers to µg of activity.
[c] Prepare the USP Reference Standard and sample test dilutions simultaneously.
[d] Further dilute the stock solution with dimethyl sulfoxide to give concentrations of 12.8, 16, 20, 25, and 31.2 µg/mL before making the test dilutions.The test dilution of the sample should contain the same amount of dimethyl sulfoxide as the test dilutions of the USP Reference Standard.
[e] The letter B refers to buffer. See *Media and Solutions, Buffers* for a description of each buffer listed in this table.
[f] Each of the standard test dilutions should contain the same amount of hydrochloric acid as the test dilution of the sample.
[g] The turbidimetric assay can be used as an alternative procedure.
[h] Further dilute the stock solution with dimethylformamide to give concentrations of 256, 320, 400, 500, and 624 U/mL before making the test dilutions. Prepare the standard test dilutions simultaneously with test dilutions of the sample to be tested. The test dilution of the sample should contain the same amount of dimethylformamide as the test dilutions of the standard. Use low-actinic glassware.
[i] Prepare the stock solution by adding 2 mL of water for each 5 mg of the USP Reference Standard.

Table 2 *(Continued)*

Antibiotic	Stock Solution					Test Dilution	
	Initial Solvent	Initial Concentration	Further Diluent	Final Concentration	Use Within	Final Diluent	Median Concentration (S_3)[a,b]
Natamycin	Dimethyl sulfoxide	—	—	1 mg/mL	Same day	B.10[e]	5 µg/mL
Neomycin[g]	B.3[e]	—	—	1 mg/mL	14 days	B.3[e]	1 µg/mL
Novobiocin	alcohol	10 mg/mL	B.3[e]	1 mg/mL	5 days	B.6[e]	0.5 µg/mL
Nystatin[c, h]	Dimethylformamide	—	—	1000 U/mL	Same day	B.6[e]	20 U/mL
Paromomycin	B.3[e]	—	—	1 mg/mL	21 days	B.3[e]	1 µg/mL
Penicillin G	B.1[e]	—	—	1000 U/mL	4 days	B.1[e]	1 U/mL
Polymyxin B[i]	Water	—	B.6[e]	10,000 U/mL	14 days	B.6[e]	10 U/mL
Sisomicin	B.3[e]	—	—	1 mg/mL	14 days	B.3[e]	0.1 µg/mL
Vancomycin	Water	—	—	1 mg/mL	7 days	B.4[e]	10 µg/mL

[a] It is acceptable to adjust the median concentration to optimize zone sizes if the data remain in the linear range.
[b] µg in this column refers to µg of activity.
[c] Prepare the USP Reference Standard and sample test dilutions simultaneously.
[d] Further dilute the stock solution with dimethyl sulfoxide to give concentrations of 12.8, 16, 20, 25, and 31.2 µg/mL before making the test dilutions.The test dilution of the sample should contain the same amount of dimethyl sulfoxide as the test dilutions of the USP Reference Standard.
[e] The letter B refers to buffer. See *Media and Solutions, Buffers* for a description of each buffer listed in this table.
[f] Each of the standard test dilutions should contain the same amount of hydrochloric acid as the test dilution of the sample.
[g] The turbidimetric assay can be used as an alternative procedure.
[h] Further dilute the stock solution with dimethylformamide to give concentrations of 256, 320, 400, 500, and 624 U/mL before making the test dilutions. Prepare the standard test dilutions simultaneously with test dilutions of the sample to be tested. The test dilution of the sample should contain the same amount of dimethylformamide as the test dilutions of the standard. Use low-actinic glassware.
[i] Prepare the stock solution by adding 2 mL of water for each 5 mg of the USP Reference Standard.

Inocula

Suspend the test organism from a freshly grown slant or culture in 3 mL of sterile saline TS. Glass beads can be used to facilitate the suspension. Spread the saline suspension onto the surface of two or more agar plates (covering the entire surface) or onto the surface of a Roux bottle containing 250 mL of the specified medium (see *Table 3*).

Incubate for the specified time and at the temperature as specified in *Table 3*, or until growth is apparent.

After incubation, harvest the organism from the plates or Roux bottle with approximately 50 mL of sterile saline TS (except use *Medium 34* for bleomycin; see the section *Media and Solutions*), using a sterile bent glass rod or sterile glass beads. Pipet the suspension into a sterile glass container. This is the harvest suspension.

Dilute an appropriate amount of the harvest suspension with sterile saline TS. Using the UV-visible spectrophotometer, measure % transmittance at 580 nm. The target value is approximately 25% transmittance at 580 nm. This value is used to standardize the harvest suspension volume added to the seed layer agar.

Starting with the suggested volumes indicated in *Table 3*, determine during method verification the proportions of stock suspension to be added to the inoculum medium that result in satisfactory zones of inhibition of approximately 14–16 mm in diameter for the median concentration of the standard (S_3). [NOTE—Zone sizes that are outside the 11 to 19-mm range are not desirable, because these contribute to assay variability.] If the dilution percentage transmittance is above 25%, a ratio may be used to normalize the addition of organism to the seed layer. The normalization factor can be determined by dividing the percentage transmittance obtained from the dilution by 25. This ratio can then be multiplied by the suggested inoculum amount to obtain the volume (mL) of harvest suspension that needs to be added to the seed layer. Adjust the quantity of inoculum on a daily basis, if necessary, to obtain an optimum concentration–response relationship.

Alternatively, determine during method verification the proportion of harvest suspension to be incorporated into the inoculum, starting with the volumes indicated in *Table 3*, that result in satisfactory demarcation of the zones of inhibition of about 14–16 mm in diameter for the median concentration of the standard (S_3) and giving a reproducible concentration–response relationship. Prepare the inoculum by adding a portion of stock suspension to a sufficient amount of agar medium that has been melted and cooled to 45°–50°. Swirl the mixture without creating bubbles in order to obtain a homogeneous suspension.

Table 3

Antibiotic	Test Organism	ATCC[a] Number	Incubation Conditions Medium[b]	Incubation Conditions Temperature (°)	Incubation Conditions Time	Suggested Inoculum Composition Medium[b]	Suggested Inoculum Composition Amount (mL/100 mL)
Amphotericin B	*Saccharomyces cerevisiae*	9763	19	29–31	48 h	19	1.0
Bacitracin	*Micrococcus luteus*	10240	1	32–35	24 h	1	0.3
Bleomycin	*Mycobacterium smegmatis*	607	36	36–37.5	48 h	35	1.0
Carbenicillin[c]	*Pseudomonas aeruginosa*	25619	1	36–37.5	24 h	10	0.5
Cloxacillin	*Staphylococcus aureus*	29737	1	32–35	24 h	1	0.1
Colistimethate	*Bordetella bronchiseptica*	4617	1	32–35	24 h	10	0.1
Colistin	*Bordetella bronchiseptica*	4617	1	32–35	24 h	10	0.1
Dihydrostreptomycin	*Bacillus subtilis*	6633	32	32–35	5 days	5	As required
Erythromycin	*Micrococcus luteus*	9341	1	32–35	24 h	11	1.5
Gentamicin	*Staphylococcus epidermidis*	12228	1	32–35	24 h	11	0.03
Nafcillin	*Staphylococcus aureus*	29737	1	32–35	24 h	1	0.3
Neomycin	*Staphylococcus epidermidis*	12228	1	32–35	24 h	11	0.4
Novobiocin	*Staphylococcus epidermidis*	12228	1	32–35	24 h	1	4.0
Nystatin	*Saccharomyces cerevisiae*	2601	19	29–31	48 h	19	1.0
Paromomycin	*Staphylococcus epidermidis*	12228	1	32–35	24 h	11	2.0
Penicillin G	*Staphylococcus aureus*	29737	1	32–35	24 h	1	1.0
Polymyxin B	*Bordetella bronchiseptica*	4617	1	32–35	24 h	10	0.1
Sisomicin	*Staphylococcus epidermidis*	12228	1	32–35	24 h	11	0.03
Vancomycin	*Bacillus subtilis*	6633	32	32–35	5 days	8	As required

[a] American Type Culture Collection, 10801 University Boulevard, Manassas VA 20110-2209 (http://www.atcc.org)
[b] See *Media and Solutions, Media*.
[c] Use 0.5 mL of a 1:25 dilution of the stock suspension/100 mL of *Medium 10*.

Analysis

Prepare the base layer for the required number of assay Petri plates, using the medium and volume shown in *Table 4*. Allow it to harden into a smooth base layer of uniform depth. Prepare the appropriate amount of seed layer inoculum (*Table 5*) as directed for the given antibiotic (*Table 3*) with any adjustments made based on the preparatory trial analysis. Tilt the plate back and forth to spread the inoculum evenly over the base layer surface, and allow it to harden.

Table 4 (base layer)

Antibiotic	Medium[a]	Target Volume (mL)
Amphotericin B[b]	—	—
Bleomycin	35	10
Carbenicillin	9	21
Colistimethate	9	21
Colistin	9	21
Dihydrostreptomycin	5	21
Erythromycin	11	21
Gentamicin	11	21
Neomycin	11	21
Nystatin[b]	—	—
Paromomycin	11	21
Polymyxin B	9	21
Sisomicin	11	21
Vancomycin	8	10
All others	2	21

[a] See *Media and Solutions, Media*.
[b] No base layer is used.

[NOTE—The base layer may be warmed to facilitate a uniform seed layer.]

Table 5 (seed layer)

Antibiotic	Medium[a]	Target Volume (mL)
Amphotericin B	Refer to *Table 3*	8
Bleomycin		6
Nystatin		8
All others		4

[a] See *Media and Solutions, Media.*

Drop six assay cylinders on the inoculated surface from a height of 12 mm, using a mechanical guide or other device to ensure even spacing on a radius of 2.8 cm, and cover the plates to avoid contamination. Fill the six cylinders on each plate with dilutions of antibiotic containing the test levels (S_1–S_5 and U_3) specified in the following paragraph. Incubate the plates as specified in *Table 6* for 16–18 h, and remove the cylinders. Measure and record the diameter of each zone of growth inhibition to the nearest 0.1 mm.

Table 6

Antibiotic	Incubation Temperature (°)
Amphotericin B	29–31
Carbenicillin	36–37.5
Colistimethate	36–37.5
Colistin	36–37.5
Dihydrostreptomycin	36–37.5
Gentamicin	36–37.5
Neomycin	36–37.5
Novobiocin	34–36
Nystatin	29–31
Paromomycin	36–37.5
Polymyxin B	36–37.5
Sisomicin	36–37.5
Vancomycin	36–37.5
All others	32–35

The standards (S_1–S_5) and a single test level of the sample (U_3) corresponding to S_3 of the standard curve, as defined in *Standard solutions* and *Sample solutions* will be used in the assay. For deriving the standard curve, fill alternate cylinders on each of three plates with the median test dilution (S_3) of the standard and each of the remaining nine cylinders with one of the other four test dilutions of the standard. Repeat the process for the three test dilutions of the standard. For the sample, fill alternate cylinders on each of three plates with the median test dilution of the standard (S_3), and fill the remaining nine cylinders with the corresponding test dilution (U_3) of the sample.

TURBIDIMETRIC METHOD

Temperature Control

Use appropriately qualified and calibrated equipment to obtain the temperature ranges specified in *Table 8*. [Note—Temperature control can be achieved using either circulating air or water. The greater heat capacity of water lends it some advantage over circulating air.]

Spectrophotometer

Measuring absorbance or transmittance within a fairly narrow frequency band requires a suitable spectrophotometer in which the wavelength can be varied or restricted by use of 580-nm or 530-nm filters. Alternatively, a variable-wavelength spectrophotometer can be used and set to a wavelength of 580 nm or 530 nm.

The instrument may be modified as follows:

1. To accept the tube in which incubation takes place (see *Apparatus* below)
2. To accept a modified cell fitted with a drain that facilitates rapid change of contents
3. To contain a flow cell for a continuous flowthrough analysis

Autozero the instrument with clear, uninoculated broth prepared as specified for the particular antibiotic, including the same amount of test dilution (including formaldehyde if specified) as found in each sample.

Either absorbance or transmittance can be measured while preparing inocula.

Apparatus

Glass or plastic test tubes, e.g., 16 × 125 mm or 18 × 150 mm. [NOTE—Use tubes that are relatively uniform in length, diameter, and thickness and substantially free from surface blemishes and scratches. In the spectrophotometer, use matched tubes that are free from scratches or blemishes. Clean tubes thoroughly to remove all antibiotic residues and traces of cleaning solution. Sterilize tubes before use.]

Standard Solutions

To prepare a stock solution, dissolve a quantity of the USP Reference Standard of a given antibiotic or the entire contents of a vial of USP Reference Standard, where appropriate, in the solvent specified in *Table 7*, and dilute to the required concentration. Store at 2°–8°, and use within the period indicated. On the day of the assay, prepare from the stock solution five or more test dilutions, the successive solutions increasing stepwise in concentration, usually in the ratio of 1:1.25. [NOTE—It may be necessary to use smaller ratios for the successive dilutions from the stock solution for the turbidimetric assay.] Use the final diluent specified such that the median level of the standard (S_3) has the concentration suggested in *Table 7*.

Sample Solutions

Assign an assumed potency per unit weight or volume to the unknown, and on the day of the assay prepare a stock solution in the same manner specified for the USP Reference Standard (*Table 7*). Dilute the sample stock solution in the specified final diluent at a nominal concentration equal to the median concentration of the standard (S_3) as specified in *Table 7*.

Table 7

	Stock Solution					Test Dilution	
Antibiotic	Initial Solvent	Initial Concentration	Further Diluent	Final Stock Concentration	Use Within	Final Diluent	Median Concentration (S_3)[a]
Capreomycin	Water	—	—	1 mg/mL	7 days	Water	100 µg/mL
Chloramphenicol	Alcohol	10 mg/mL	Water	1 mg/mL	30 days	Water	2.5 µg/mL
Chlortetracycline	0.01 N hydrochloric acid	—	—	1 mg/mL	4 days	Water	0.06 µg/mL
Dihydrostreptomycin[b]	Water	—	—	1 mg/mL	30 days	Water	30 µg/mL
Gramicidin	Alcohol	—	—	1 mg/mL	30 days	Alcohol	0.04 µg/mL
Neomycin[b,d]	B.3[c]	—	—	100 µg/mL	14 days	B.3[c]	1.0 µg/mL
Oxytetracycline	0.1 N hydrochloric acid	—	—	1 mg/mL	4 days	Water	0.24 µg/mL
Tetracycline	0.1 N hydrochloric acid	—	—	1 mg/mL	1 day	Water	0.24 µg/mL
Thiostrepton	Dimethyl sulfoxide			1 U/mL	Same day	Dimethyl sulfoxide	0.80 U/mL
Troleandomycin	Isopropyl alcohol and water (4:1)	—	—	1 mg/mL	Same day	Water	25 µg/mL
Tylosin	Methanol	10 mg/mL	B.16[c]	1 mg/mL	30 days	Methanol and B.3[c] (1:1)	4 µg/mL

[a] µg in this column refers to µg of activity.
[b] The cylinder-plate assay can be used as an alternative procedure.
[c] The letter B refers to buffer. See *Media and Solutions, Buffers* for a description of each buffer listed in this table.
[d] Dilute the 100-µg/mL stock solution with *Buffer B.3* to obtain a solution having a concentration equivalent to 25 µg/mL of neomycin.To separate 50-mL volumetric flasks add 1.39, 1.67, 2.00, 2.40, and 2.88 mL of this solution. Add 5.0 mL of 0.01 N hydrochloric acid to each flask, dilute with *Buffer B.3* to volume, and mix to obtain solutions having concentrations of 0.69, 0.83, 1.0, 1.2, and 1.44 µg/mL of neomycin. Use these solutions to prepare the standard response line.

Inocula

Suspend the test organism from a freshly grown slant or culture in 3 mL of sterile saline TS. Glass beads can be used to facilitate the suspension. *Enterococcus hirae* (ATCC 10541) and *Staphylococcus aureus* (ATCC 9144) are grown in a liquid medium, not on agar. Spread the saline suspension onto the surface of two or more agar plates (covering the entire surface) or onto the surface of a Roux bottle containing 250 mL of the specified medium (see *Table 8*). Incubate at the time and temperature specified in *Table 8*, or until growth is apparent.

After incubation, harvest the organism from the plates or Roux bottle with approximately 50 mL of sterile saline TS, using a sterile bent glass rod or sterile glass beads. Pipet the suspension into a sterile glass bottle. This is the harvest suspension.

Determine during method verification the quantity of harvest suspension that will be used as the inoculum, starting with the volume suggested in *Table 8*. Prepare also an extra S_3 as a test of growth. Incubate the trial tests for the times indicated in *Table 11*. Adjust the quantity of inoculum daily, if necessary, to obtain the optimum concentration–response relationship from

the amount of growth of the test organism in the assay tubes. At the completion of the specified incubation periods, tubes containing the median concentration of the standard should have absorbance values as specified in *Table 9*. Determine the exact duration of incubation by observing the growth in the reference concentration (median concentration) of the standard (S_3).

Table 8

Antibiotic	Test Organism	ATCC[a] Number	Incubation Conditions			Suggested Inoculum Composition	
			Medium[b]	Temperature (°)	Time	Medium[b]	Amount (mL/100 mL)
Capreomycin	*Klebsiella pneumoniae*	10031	1	36–37.5	16–24 h	3	0.05
Chloramphenicol	*Escherichia coli*	10536	1	32–35	24 h	3	0.7
Chlortetracycline	*Staphylococcus aureus*	29737	1	32–35	24 h	3	0.1
Dihydrostreptomycin	*Klebsiella pneumoniae*	10031	1	36–37.5	16–24 h	3	0.1
Gramicidin	*Enterococcus hirae*	10541	3	36–37.5	16–18 h	3	1.0
Neomycin	*Klebsiella pneumoniae*	10031	1	36–37.5	16–24 h	39	2
Oxytetracycline	*Staphylococcus aureus*	29737	1	32–35	24 h	3	0.1
Tetracycline	*Staphylococcus aureus*	29737	1	32–35	24 h	3	0.1
Thiostrepton	*Enterococcus hirae*	10541	40	36–37.5	18–24 h	41	0.2
Troleandomycin	*Klebsiella pneumoniae*	10031	1	36–37.5	16–24 h	3	0.1
Tylosin	*Staphylococcus aureus*	9144	3	35–39	16–18 h	39	2–3

[a] American Type Culture Collection, 10801 University Boulevard, Manassas VA 20110-2209 (http://www.atcc.org).
[b] See *Media and Solutions, Media*.

Table 9

Antibiotic	Absorbance, NLT (a.u.)
Capreomycin	0.4
Chlortetracycline	0.35
Gramicidin	0.35
Tetracycline	0.35
All others	0.3

Analysis

On the day of the assay, prepare the necessary concentration of antibiotic by dilution of stock solutions of the standard and of each sample as specified under *Standard solutions* and *Sample solutions*. Prepare five test levels, each in triplicate, of the standard (S_1–S_5) and a single test level (U_3), also in triplicate, of up to 20 samples corresponding to S_3 (median concentration) of the standard.

Place the tubes in test tube racks or other carriers. Include in each rack 1–2 control tubes containing 1 mL of the test diluent (see *Table 7*) but no antibiotic. Add the volumes of the standard and sample test dilutions as indicated in *Table 10*. Randomly distribute one complete set, including the controls, in a tube rack. Add the volume of inoculum specified in *Table 10* to each tube in the rack in turn, and place the completed rack immediately in an incubator or a water bath maintained at 36.0°–37.5° for the time specified in *Table 11*.

Table 10

Antibiotic	Volume of Test Dilution (mL)	Volume of Inoculum (mL)
Gramicidin	0.10	9.0
Thiostrepton	0.10	10.0
Tylosin	0.10	9.0
All others	1.0	9.0

Table 11

Antibiotic	Incubation Time (h)
Capreomycin	3–4
Chloramphenicol	3–4
Cycloserine	3–4

General Chapters

Table 11 *(Continued)*

Antibiotic	Incubation Time (h)
Dihydrostreptomycin	3–4
Streptomycin	3–4
Troleandomycin	3–4
Tylosin	3–5
All others	4–5

After incubation, immediately inhibit the growth of the organism by adding 0.5 mL of dilute formaldehyde to each tube, except for tylosin. For tylosin, heat the rack in a water bath at 80°–90° for 2–6 min or in a steam bath for 5–10 min, and bring to room temperature. Read absorbance or transmittance at 530 or 580 nm, analyzing one rack at a time.

MEDIA AND SOLUTIONS

The media required for the preparation of test organism inocula are made from the ingredients listed herein. Minor modifications of the individual ingredients are acceptable; and reconstituted dehydrated media can be substituted, provided that the resulting media possess equal or better growth-promoting properties and give a similar standard curve response.

Media

Dissolve the ingredients in water to make 1 L, and adjust the solutions with either 1 N sodium hydroxide or 1 N hydrochloric acid as required, so that after steam sterilization the pH is as specified.

Medium 1

Peptone	6.0 g
Pancreatic digest of casein	4.0 g
Yeast extract	3.0 g
Beef extract	1.5 g
Dextrose	1.0 g
Agar	15.0 g
Water	1000 mL
pH after sterilization	6.6 ± 0.1

Medium 2

Peptone	6.0 g
Yeast extract	3.0 g
Beef extract	1.5 g
Agar	15.0 g
Water	1000 mL
pH after sterilization	6.6 ± 0.1

Medium 3

Peptone	5.0 g
Yeast extract	1.5 g
Beef extract	1.5 g
Sodium chloride	3.5 g
Dextrose	1.0 g
Dibasic potassium phosphate	3.68 g
Monobasic potassium phosphate	1.32 g
Water	1000 mL
pH after sterilization	7.0 ± 0.05

Medium 4

Peptone	6.0 g
Yeast extract	3.0 g
Beef extract	1.5 g
Dextrose	1.0 g
Agar	15.0 g

General Chapters

Medium 4 *(Continued)*

Water	1000 mL
pH after sterilization	6.6 ± 0.1

Medium 5

Peptone	6.0 g
Yeast extract	3.0 g
Beef extract	1.5 g
Agar	15.0 g
Water	1000 mL
pH after sterilization	7.9 ± 0.1

Medium 8

Peptone	6.0 g
Yeast extract	3.0 g
Beef extract	1.5 g
Agar	15.0 g
Water	1000 mL
pH after sterilization	5.9 ± 0.1

Medium 9

Pancreatic digest of casein	17.0 g
Papaic digest of soybean	3.0 g
Sodium chloride	5.0 g
Dibasic potassium phosphate	2.5 g
Dextrose	2.5 g
Agar	20.0 g
Water	1000 mL
pH after sterilization	7.2 ± 0.1

Medium 10

Pancreatic digest of casein	17.0 g
Papaic digest of soybean	3.0 g
Sodium chloride	5.0 g
Dibasic potassium phosphate	2.5 g
Dextrose	2.5 g
Agar	12.0 g
Water	1000 mL
Polysorbate 80 (added after boiling the medium to dissolve the agar)	10 mL
pH after sterilization	7.2 ± 0.1

Medium 11

Peptone	6.0 g
Pancreatic digest of casein	4.0 g
Yeast extract	3.0 g
Beef extract	1.5 g
Dextrose	1.0 g
Agar	15.0 g
Water	1000 mL
pH after sterilization	8.3 ± 0.1

Medium 13

Peptone	10.0 g
Dextrose	20.0 g
Water	1000 mL
pH after sterilization	5.6 ± 0.1

Medium 19

Peptone	9.4 g
Yeast extract	4.7 g
Beef extract	2.4 g
Sodium chloride	10.0 g
Dextrose	10.0 g
Agar	23.5 g
Water	1000 mL
pH after sterilization	6.1 ± 0.1

Medium 32

Peptone	6.0 g
Pancreatic digest of casein	4.0 g
Yeast extract	3.0 g
Beef extract	1.5 g
Manganese sulfate	0.3 g
Dextrose	1.0 g
Agar	15.0 g
Water	1000 mL
pH after sterilization	6.6 ± 0.1

Medium 34

Glycerol	10.0 g
Peptone	10.0 g
Beef extract	10.0 g
Sodium chloride	3.0 g
Water	1000 mL
pH after sterilization	7.0 ± 0.1

Medium 35

Glycerol	10.0 g
Peptone	10.0 g
Beef extract	10.0 g
Sodium chloride	3.0 g
Agar	17.0 g
Water	1000 mL
pH after sterilization	7.0 ± 0.1

Medium 36

Pancreatic digest of casein	15.0 g
Papaic digest of soybean	5.0 g
Sodium chloride	5.0 g
Agar	15.0 g
Water	1000 mL
pH after sterilization	7.3 ± 0.1

Medium 39

Peptone	5.0 g
Yeast extract	1.5 g
Beef extract	1.5 g
Sodium chloride	3.5 g
Dextrose	1.0 g
Dibasic potassium phosphate	3.68 g
Monobasic potassium phosphate	1.32 g
Water	1000 mL
pH after sterilization	7.9 ± 0.1

Medium 40

Yeast extract	20.0 g
Polypeptone	5.0 g
Dextrose	10.0 g
Monobasic potassium phosphate	2.0 g
Polysorbate 80	0.1 g
Agar	10.0 g
Water	1000 mL
pH after sterilization	6.7 ± 0.2

Medium 41

Pancreatic digest of casein	9.0 g
Dextrose	20.0 g
Yeast extract	5.0 g
Sodium citrate	10.0 g
Monobasic potassium phosphate	1.0 g
Dibasic potassium phosphate	1.0 g
Water	1000 mL
pH after sterilization	6.8 ± 0.1

Solutions

BUFFERS

Prepare as directed in *Table 12*, or by other suitable means. The buffers are sterilized after preparation; the pH specified in each case is the pH after sterilization.

Table 12. Buffers

Buffer	Concentration of Dibasic Potassium Phosphate (g/L)	Concentration of Monobasic Potassium Phosphate (g/L)	Volume of 10 N Potassium Hydroxide (mL)	pH after Sterilization[a]
Buffer B.1 (1%, pH 6.0)	2	8	—	6.0 ± 0.05
Buffer B.3 (0.1 M, pH 8.0)	16.73	0.523	—	8.0 ± 0.1
Buffer B.4 (0.1 M, pH 4.5)	—	13.61	—	4.5 ± 0.05
Buffer B.6 (10%, pH 6.0)	20	80	—	6.0 ± 0.05
Buffer B.10 (0.2 M, pH 10.5)	35	—	2	10.5 ± 0.1
Buffer B.16 (0.1 M, pH 7.0)	13.6	4	—	7.0 ± 0.2

[a] Adjust the pH with 18 N phosphoric acid or 10 N potassium hydroxide.

Other solutions: See *Reagents, Indicators, and Solutions.*
Water: Use *Purified Water.*
Saline: Use saline TS.
Dilute formaldehyde: Formaldehyde solution and water (1:3)

CALCULATIONS

Introduction

Antibiotic potency is calculated by interpolation from a standard curve using a log-transformed straight-line method with a least-squares fitting procedure (see below for calculation details). The analyst must consider three essential concepts in interpreting antibiotic potency results:

1. Biological concentration–response relationships generally are not linear. The antibiotic potency method allows fitting the data to a straight line by evaluating a narrow concentration range where the results approach linearity. The assay results can be considered valid only if the computed potency is 80%–125% of that assumed in preparing the sample stock solution. When the calculated potency value falls outside 80%–125%, the result for the sample may fall outside the narrow concentration range where linearity has been established. In such a case, adjust the assumed potency of the sample accordingly, and repeat the assay to obtain a valid result.

General Chapters

2. The most effective means of reducing the variability of the reportable value (the geometric mean potency across runs and replicates) is through independent runs of the assay procedure. The combined result of a series of smaller, independent assays spread over a number of days is a more reliable estimate of potency than that from a single large assay with the same total number of plates or tubes. Three or more independent assays are required for antibiotic potency determinations.
3. The number of assays needed in order to obtain a reliable estimate of antibiotic potency depends on the required specification range and the assay variability. The confidence limit calculation described below is determined from several estimated log potencies that are approximately equal in precision. If the value calculated for the width of the confidence interval, *W*, is too wide, no useful decision can be made about whether the potency meets its specification.

The laboratory should predetermine in its standard operating procedures a maximum acceptable value for the confidence interval width. This maximum value should be determined during development and confirmed during validation or verification. If the calculated confidence interval width exceeds this limit, the analyst must perform additional independent potency determinations to meet the limit requirement. Note that the decision to perform additional determinations does not depend on the estimated potency but only on the uncertainty in that estimate as determined by the confidence interval width. Assay variability has a greater impact on the calculated confidence limit than does the number of independent potency determinations. As a result, the analyst should first consider decreasing variability to the extent possible before conducting potency determinations.

The following sections describe the calculations for determining antibiotic potency as well as for performing the confidence limit calculation. Methods for calculating standard error are also shown in order to allow estimates of assay variance. Where logarithms are used, any base log is acceptable. *Appendix 1* provides formulas for hand calculations applicable when the concentrations are equally spaced in the log scale. Alternative statistical methods may be used if appropriately validated.

Cylinder-plate Assay

This section details analysis of the sample data and determination of the potency of an unknown, using the cylinder-plate assay.

SAMPLE DATA

Table 13 shows the data from one assay that will be used as an example throughout this section. For each of the 12 plates, zones 1, 3, and 5 are the reference concentration and the other three zones are for one of the other four concentrations, as shown. Other columns are needed for calculations and are explained below.

Step 1: Perform initial calculations and variability suitability check.

For each set of three plates, average the nine reference values and average the nine standard values.

Example (see *Table 13*)

$$15.867 = \overline{X}(16.1, 15.6, \ldots, 15.8)$$

$$14.167 = \overline{X}(14.6, 14.1, \ldots, 14.8)$$

For each set of three plates determine the standard deviation of the nine reference values and the standard deviation of the nine standard values. For each standard deviation, determine the corresponding relative standard deviation.

Example (see *Table 13*)

$$0.200 = \sigma(16.1, \ldots, 15.8)$$

$$1.3\% = (0.200/15.867) \times 100$$

$$0.324 = \sigma(14.6, \ldots, 14.1)$$

$$2.3\% = (0.324/14.167) \times 100$$

For a variability suitability criterion, each laboratory should determine a maximum acceptable value for the relative standard deviation. If any of the eight relative standard deviations (four for the reference and four for the standard) exceed this predetermined maximum, the assay data are not suitable and should be discarded. [NOTE—The suggested limit for relative standard deviation is NMT 10%.]

Step 2: Perform a plate-to-plate variation correction.

This correction is applied to convert the average zone measurement obtained for each concentration to the value it would be if the average reference concentration measurement for that set of three replicate plates were the same as the value of the correction point:

$$\overline{X}_C = \overline{X}_S - (\overline{X}_R - P)$$

$\overline{X}_C$ = corrected standard mean
$\overline{X}_S$ = original standard mean

$\overline{X}_R$ = reference mean
P = correction point

Example: For the first set of three plates in *Table 13* (S_1), the correction is:

$$14.022 = 14.167 - (15.867 - 15.722) = 14.167 - 0.145$$

Step 3: Determine the standard curve line.

Generate the standard curve line by plotting the corrected zone measurements versus the log of the standard concentration values. Calculate the equation of the standard curve line by performing a standard unweighted linear regression on these values, using appropriate software or the manual calculations of *Appendix 1*. [NOTE—Use either the natural log or the base 10 log to plot the standard curve and determine the regression equation; both provide the same final test result.] Each laboratory should determine a minimum value of the coefficient of determination (%R^2) for an acceptable regression. The regression is acceptable only if the obtained %R^2 exceeds this predetermined value. [NOTE—The suggested limit for the percentage coefficient of determination is NLT 95%.]

Table 13. Sample Data (Cylinder-Plate Assay)

			Reference (S_3)						Sample						
Standard	**Concentration (U/mL)**	**Plate replicate**	**Zone 1 (mm)**	**Zone 3 (mm)**	**Zone 5 (mm)**	**Mean (mm)**	**SD**	**%RSD**	**Zone 2 (mm)**	**Zone 4 (mm)**	**Zone 6 (mm)**	**Mean (mm)**	**SD**	**%RSD**	**Corrected Mean (mm)**
S_1	3.20	1	16.1	15.6	15.8	15.867	0.200	1.3	14.6	14.1	13.5	14.167	0.324	2.3	14.022
		2	16.0	15.9	16.2				14.5	14.1	14.4				
		3	15.7	15.7	15.8				14.0	14.2	14.1				
S_2	4.00	1	15.8	15.6	15.5	15.567	0.158	1.0	14.7	15.1	14.8	14.833	0.265	1.8	14.989
		2	15.7	15.5	15.6				14.7	14.9	15.2				
		3	15.7	15.4	15.3				14.8	15.0	14.3				
S_4	6.25	1	15.6	15.8	16.0	15.789	0.169	1.1	16.6	16.8	16.3	16.578	0.233	1.4	16.511
		2	15.8	15.6	15.7				16.6	16.5	16.2				
		3	16.1	15.7	15.8				16.9	16.5	16.8				
S_5	7.8125	1	15.6	15.6	15.5	15.667	0.141	0.9	17.3	17.0	17.0	17.167	0.224	1.3	17.222
		2	15.6	15.7	15.5				17.3	17.4	17.2				
		3	15.9	15.8	15.8				17.3	17.3	16.7				
						15.722[a]									
U_3	unknown	1	15.7	15.8	15.7	15.678	0.179	1.1	15.3	15.8	15.7	15.478	0.307	2.0	15.522
		2	15.9	15.7	15.7				15.8	15.8	15.5				
		3	15.5	15.8	15.3				15.2	15.1	15.1				

[a] This is the value of the overall reference mean, referred to as the "correction point" below.

Example: *Table 14* summarizes the portion of *Table 13* needed for this part of the calculation.

Table 14

Standard Set	Corrected Zone Measurements (mm)	Concentration (U/mL)
S_1	14.022	3.2
S_2	14.989	4.0
Reference (S_3)	15.722	5
S_4	16.511	6.25
S_5	17.222	7.8125

LINEAR REGRESSION RESULTS

Standard curve line:

$$Z = [3.551 \times \ln(C)] + 9.978$$

Z = corrected zone measurement
C = concentration
$\%R^2 = 99.7$

SAMPLE POTENCY DETERMINATION

To estimate the potency of the unknown sample, average the zone measurements of the standard and the zone measurements of the sample on the three plates used. Correct for plate-to-plate variation using the correction point determined above to obtain a corrected average for the unknown, $\overline{U}$. [NOTE—An acceptable alternative to using the correction point is to correct using the value on the estimated regression line corresponding to the log concentration of S_3.] Use the corrected average zone measurement in the equation of the standard curve line to determine the log concentration of the sample, L_U, by:

$$L_U = (\overline{U} - a)/b$$

a = intercept of the regression line
b = slope of the regression line

To obtain the potency of the unknown, take the antilog of L_U and multiply the result by any applicable dilution factor. This value can also be expressed as a percentage of the reference concentration value.

Example: Corrected sample zone measurement (*Table 13*) = 15.522
Natural log of the sample concentration:

$$L_U = (15.522 - 9.978)/3.551 = 1.561$$

Sample concentration:

$$C_U = e^{1.561} = 4.765$$

Percentage of reference concentration:

$$\text{Result} = (4.765/5.000) \times 100 = 95.3\%$$

Turbidimetric Assay

This section details analysis of the sample data and determination of the potency of an unknown using the turbidimetric assay. The method assumes that the tubes are randomly distributed within the heat block or other temperature control device. If the device has a temperature profile that is not uniform, a randomized blocks design is preferred. In such a design, the rack is divided into areas (*blocks*) of relatively uniform temperature and at least one tube of each Standard concentration and of each unknown is placed in each area. The data analysis of a randomized block design is different from the following.

SAMPLE DATA

Table 15 shows the data from one assay that will be used for an example throughout this section. Other columns are needed for calculations and are explained below.

Table 15. Sample Data (Turbidimetric Assay)

Standard	Concentration (µg/mL)	Replicate	Absorbance (a.u.)	Average (a.u.)	Standard Deviation
		1	0.8545		
		2	0.8422		
S_1	64	3	0.8495	0.8487	0.0062
		1	0.8142		
		2	0.8273		
S_2	80	3	0.8392	0.8269	0.0125
		1	0.6284		
		2	0.6947		
S_3	100	3	0.7563	0.6931	0.0640
		1	0.6933		
		2	0.6850		
S_4	125	3	0.6699	0.6827	0.0119
		1	0.5299		
		2	0.5779		
S_5	156	3	0.5316	0.5465	0.0272
		1	0.7130		
		2	0.7960		
U_3	unknown	3	0.7201	0.7430	0.0460

Step 1: Perform initial calculations and variability suitability check.

For each concentration (including the sample), average the three absorbance values.

Example: See S_1 in *Table 15.*

$$0.8487 = \overline{X}(0.8545, 0.8422, 0.8495)$$

For each concentration, determine the standard deviation of the three readings and a combined standard deviation for all the concentrations.

Example: See S_1 in *Table 15.*

$$0.0125 = SD(0.8545, 0.8422, 0.8495)$$

The combined value is calculated by taking the square root of the average of the five variances:

$$0.0325 = \{[(0.0062)^2 + (0.0125)^2 + (0.0640)^2 + (0.0119)^2 + (0.0272)^2]/5\}^{1/2}$$

For a variability suitability criterion, each laboratory should determine a maximum acceptable combined standard deviation. If the combined standard deviation exceeds this predetermined maximum, the assay data are not suitable and should be discarded. [NOTE—The suggested limit for the combined standard deviation is NMT 10% of the average absorbance value across the five concentrations.] If the number of replicates per concentration is at least five, then a relative standard deviation can be computed for each concentration after checking for outliers and compared to a maximum acceptable relative standard deviation. [NOTE—The suggested limit for the relative standard deviation is NMT 10%.]

Step 2: Determine the standard curve line.

Generate the standard curve line by plotting the average absorbance values versus the log of the standard concentration values. Calculate the equation of the standard curve line by performing an unweighted linear regression on these values using appropriate software or the manual calculations of *Appendix 1*. [NOTE—Use either the natural log or the base 10 log to plot the standard curve and determine the regression equation; both provide the same final test result.] Each laboratory should determine a minimum value of the percentage coefficient of determination (%R^2) for an acceptable regression. The regression is acceptable only if the %R^2 value obtained exceeds this predetermined value. [NOTE—The suggested limit for the percentage coefficient of determination is NLT 90%.]

Example: Table 16 summarizes the portion of *Table 15* needed for this part of the calculation.

Table 16

Set of Standards	Average Absorbance Values (a.u.)	Concentration (µg/mL)
S_1	0.8487	64
S_2	0.8269	80
S_3	0.6931	100

Table 16 *(Continued)*

Set of Standards	Average Absorbance Values (a.u.)	Concentration (µg/mL)
S_4	0.6827	125
S_5	0.5465	156

LINEAR REGRESSION RESULTS

Standard curve line:

$$\text{Absorbance} = 2.2665 - [0.7735 \times \log_{10}(\text{concentration})]$$

$\%R^2 = 93.0\%$

SAMPLE POTENCY DETERMINATION

To estimate the potency of the unknown sample, average the three absorbance measurements to obtain an average for the unknown, $\overline{U}$. Use this average measurement in the equation of the standard curve line to determine the log concentration of the unknown sample, L_U, by:

$$L_U = (\overline{U} - a)/b$$

a = intercept of the regression line
b = slope of the regression line

To obtain the potency of the unknown, take the antilog of L_U and multiply the result by any applicable dilution factor. This value can also be expressed as a percentage of the reference concentration value.

Example: Average sample absorbance (*Table 15*) = 0.7430.

$$\log_{10}(C_U) = (0.7430 - 2.2665)/(-0.7735) = 1.9696$$

$$C_U = 10^{1.9696} = 93.2$$

$$\text{Percentage of reference concentration} = (93.2/100.0) \times 100 = 93.2\%$$

C_U = concentration of the sample

Confidence Limits and Combination of Assays Calculations

Because of interassay variability, three or more independent determinations are required for a reliable estimate of the sample potency. For each independent determination, start with separately prepared stock solutions and test dilutions of both the Standard and the sample, and repeat the assay of a given sample on a different day.

Given a set of at least three determinations of the unknown potency, use the method of *Appendix 2* to check for any outlier values. This determination should be done in the log scale.

To obtain a combined estimate of the unknown potency, calculate the average, M, and the standard deviation of the accepted log potencies. [NOTE—Use either the natural log or the base 10 log.] Determine the confidence interval for the potency as follows:

$$\text{antilog}[M - t(0.05, N-1) \times SD/\sqrt{N}], \text{antilog}[M + t(0.05, N-1) \times SD/\sqrt{N}]$$

M = average
SD = standard deviation
N = number of assays
$t(0.05, N-1)$ = the two-sided 5% point of a Student's t-distribution with $N-1$ degrees of freedom

NOTE—The t value is available in spreadsheets, statistics texts, and statistics software.

$$W = \text{antilog}\{[t(0.05, N-1) \times SD/\sqrt{N}]\}$$

W = half-width of the confidence interval

Compare the half-width of the confidence interval to a predetermined maximum acceptable value. If the half-width is larger than the acceptance limit, continue with additional assays.

EXAMPLE

Suppose the sample is assayed four times, with potency results in the natural log scale of 1.561, 1.444, 1.517, and 1.535. Then:

$$N = 4$$

$$M = \overline{X}(1.561, 1.444, 1.517, 1.535) = 1.514$$

$$SD = \sigma(1.561, 1.444, 1.517, 1.535) = 0.050$$

$$t = 3.182$$

The confidence interval in the log scale is

$$1.514 \pm (3.182 \times 0.050/\sqrt{4}) = (1.434, 1.594)$$

Taking antilogs, the estimated potency is

$$e^{1.514} = 4.546$$

with a 95% confidence interval for the potency of $e^{1.434}$, $e^{1.594}$ = (4.197, 4.924).

The confidence interval half-width to compare to an acceptance value is the ratio 4.924/4.546 = 1.083.

APPENDICES

Appendix 1. Formulas for Manual Calculations of Regression and Sample Concentration

If the concentrations are equally spaced in the logarithmic scale, the calculations can be performed using the following formula. Let:

$\overline{S}_k$ = mean corrected zone measurement (cylinder-plate assay) or average absorbance value (turbidimetric assay) for standard set k

k = 1, 2, 3, 4, 5

$\overline{S}$ = mean of the five $\overline{S}_k$ values

L_k = logarithm of the kth concentration. [NOTE—Use either the natural log or the base 10 log. Slope of the regression line is calculated by:]

$$b = (Y_{high} - Y_{low})/(X_{high} - X_{low})$$

$$Y_{high} = {}^1\!/\!_5(3\overline{S}_5 + 2\overline{S}_4 + \overline{S}_3 - \overline{S}_1)$$

$$Y_{low} = {}^1\!/\!_5(3\overline{S}_1 + 2\overline{S}_2 + \overline{S}_3 - \overline{S}_5)$$

$X_{high} = L_5$

$X_{low} = L_1$

Combine and simplify to:

$$b = (4\overline{S}_5 + 2\overline{S}_4 - 2\overline{S}_2 - 4\overline{S}_1)/[5(L_5 - L_1)]$$

The log of the concentration of the sample is found using:

$$L_U = L_{reference} + [(\overline{U} - \overline{S})/b]$$

For example, using the data for the cylinder-plate assay in *Table 13* and natural logarithms:

$$b = [(4 \times 17.222) + (2 \times 16.511) - (2 \times 14.989) - (4 \times 14.020)]/\{5[\ln(7.81) - \ln(3.2)]\} = 3.551$$

$$\overline{S} = (14.020 + 14.989 + 15.722 + 16.511 + 17.222)/5 = 15.693$$

Natural log of sample concentration = ln(5) + [(15.522 − 15.693)/3.551] = 1.561

Sample concentration = $e^{1.561}$ = 4.765

Appendix 2. Procedure for Checking for Outliers; Rejection of Outlying or Aberrant Measurements

A measurement that is clearly questionable because of a failure in the assay procedure should be rejected, whether it is discovered during the measuring or tabulation procedure. The arbitrary rejection or retention of an apparently aberrant measure-

ment can be a serious source of bias. In general, the rejection of measurements solely on the basis of their relative magnitudes is a procedure that should be used sparingly.

Each suspected potency measurement, or outlier, may be tested against the following criterion. This criterion is based on the variation within a single group of supposedly equivalent measurements from a normal distribution. On average, it will reject a valid observation once in 25 trials or once in 50 trials. Designate the measurements in order of magnitude from y_1 to y_N, where y_1 is the candidate outlier, and N is the number of measurements in the group. Compute the relative gap by using *Table A2-1, Test for Outlier Measurements*, and the formulas below:

When N = 3 to 7:

$$G_1 = (y_2 - y_1)/(y_N - y_1)$$

When N = 8 to 10:

$$G_2 = (y_2 - y_1)/(y_{N-1} - y_1)$$

When N = 11 to 13:

$$G_3 = (y_3 - y_1)/(y_{N-1} - y_1)$$

If G_1, G_2, or G_3, as appropriate, exceeds the critical value in *Table A2-1, Test for Outlier Measurements*, for the observed N, there is a statistical basis for omitting the outlier measurement(s).

Table A2-1. Test for Outlier Measurements

In samples from a normal population, gaps equal to or larger than the following values of G_1, G_2, and G_3 occur with a probability P = 0.01, when outlier measurements can occur only at one end; or with P = 0.02, when they may occur at either end.					
N	3	4	5	6	7
G_1	0.987	0.889	0.781	0.698	0.637
N	8	9	10		
G_2	0.681	0.634	0.597		
N	11	12	13		
G_3	0.674	0.643	0.617		

EXAMPLE

Estimated potencies of sample in log scale = 1.561, 1.444, 1.517, 1.535.

Check lowest potency for outlier:

$$G_1 = (1.517 - 1.444)/(1.561 - 1.444) = 0.624 < 0.889$$

Therefore 1.444 is not an outlier.

Check highest potency for outlier:

$$G_1 = (1.561 - 1.535)/(1.561 - 1.444) = 0.222 < 0.889$$

Therefore 1.561 is not an outlier.

Outlier potencies should be marked as outlier values and excluded from the assay calculations. NMT one potency can be excluded as an outlier.

⟨85⟩ BACTERIAL ENDOTOXINS TEST

•Portions of this general chapter have been harmonized with the corresponding texts of the *European Pharmacopoeia* and/or the *Japanese Pharmacopoeia*. Those portions that are not harmonized are marked with symbols (•,) to specify this fact.,

The Bacterial Endotoxins Test (BET) is a test to detect or quantify endotoxins from Gram-negative bacteria using amoebocyte lysate from the horseshoe crab (*Limulus polyphemus* or *Tachypleus tridentatus*).

There are three techniques for this test: the gel-clot technique, which is based on gel formation; the turbidimetric technique, based on the development of turbidity after cleavage of an endogenous substrate; and the chromogenic technique, based on the development of color after cleavage of a synthetic peptide-chromogen complex. Proceed by any of the three techniques for the test. In the event of doubt or dispute, the final decision is made based upon the gel-clot limit test unless otherwise

indicated in the monograph for the product being tested. The test is carried out in a manner that avoids endotoxin contamination.

APPARATUS

Depyrogenate all glassware and other heat-stable materials in a hot air oven using a validated process.•1• A commonly used minimum time and temperature is 30 min at 250°. If employing plastic apparatus, such as microplates and pipet tips for automatic pipetters, use apparatus that is shown to be free of detectable endotoxin and does not interfere in the test. [NOTE—In this chapter, the term "tube" includes any other receptacle such as a microtiter well.]

REAGENTS AND TEST SOLUTIONS

Amoebocyte Lysate

A lyophilized product obtained from the lysate of amoebocytes (white blood cells) from the horseshoe crab (*Limulus polyphemus* or *Tachypleus tridentatus*). This reagent refers only to a product manufactured in accordance with the regulations of the competent authority. [NOTE—*Amoebocyte Lysate* reacts to some β-glucans in addition to endotoxins. *Amoebocyte Lysate* preparations that do not react to glucans are available: they are prepared by removing the G factor reacting to glucans from *Amoebocyte Lysate* or by inhibiting the G factor reacting system of *Amoebocyte Lysate* and may be used for endotoxin testing in the presence of glucans.]

Water for Bacterial Endotoxins Test (BET)

Use Water for Injection or water produced by other procedures that shows no reaction with the lysate employed, at the detection limit of the reagent.

Lysate TS

Dissolve *Amoebocyte Lysate* in *Water for BET*, or in a buffer recommended by the lysate manufacturer, by gentle stirring. Store the reconstituted lysate, refrigerated or frozen, according to the specifications of the manufacturer.

PREPARATION OF SOLUTIONS

Standard Endotoxin Stock Solution

A *Standard Endotoxin Stock Solution* is prepared from a USP Endotoxin Reference Standard that has been calibrated to the current WHO International Standard for Endotoxin. Follow the specifications in the package leaflet and on the label for preparation and storage of the *Standard Endotoxin Stock Solution*. Endotoxin is expressed in Endotoxin Units (EU). [NOTE—One USP Endotoxin Unit (EU) is equal to one International Unit (IU) of endotoxin.]

Standard Endotoxin Solutions

After mixing the *Standard Endotoxin Stock Solution* vigorously, prepare appropriate serial dilutions of *Standard Endotoxin Solution*, using *Water for BET*. Use dilutions as soon as possible to avoid loss of activity by adsorption.

Sample Solutions

Prepare the *Sample Solutions* by dissolving or diluting drugs using *Water for BET*. Some substances or preparations may be more appropriately dissolved, or diluted in other aqueous solutions. If necessary, adjust the pH of the solution to be examined (or dilution thereof) so that the pH of the mixture of the lysate and *Sample Solution* falls within the pH range specified by the lysate manufacturer, usually 6.0–8.0. The pH may be adjusted by use of an acid, base, or suitable buffer as recommended by the lysate manufacturer. Acids and bases may be prepared from concentrates or solids with *Water for BET* in containers free of detectable endotoxin. Buffers must be validated to be free of detectable endotoxin and interfering factors.

•1 For a validity test of the procedure for inactivating endotoxins, see *Dry-Heat Sterilization* under *Sterilization and Sterility Assurance of Compendial Articles* 〈1211〉. Use *Lysate TS* having a sensitivity of not less than 0.15 Endotoxin Unit per mL.•

DETERMINATION OF MAXIMUM VALID DILUTION (MVD)

The maximum valid dilution is the maximum allowable dilution of a specimen at which the endotoxin limit can be determined. Determine the MVD from the following equation:

MVD = (endotoxin limit × concentration of *Sample Solution*)/(λ)

Endotoxin Limit

The endotoxin limit for parenteral drugs, defined on the basis of dose, equals *K*/*M*•[2]•, where *K* is a threshold pyrogenic dose of endotoxin per kg of body weight, and *M* is equal to the maximum recommended bolus dose of product per kg of body weight. When the product is to be injected at frequent intervals or infused continuously, *M* is the maximum total dose administered in a single hour period. The endotoxin limit for parenteral drugs is specified in the individual monograph in units such as EU/mL, EU/mg, EU/Unit of biological activity, etc.

Concentration of Sample Solution

mg/mL: in the case of endotoxin limit specified by weight (EU/mg);
Units/mL: in the case of endotoxin limit specified by unit of biological activity (EU/Unit);
mL/mL: when the endotoxin limit is specified by volume (EU/mL).
λ: the labeled sensitivity in the *Gel-Clot Technique* (EU/mL) or the lowest concentration used in the standard curve for the *Turbidimetric Technique* or *Chromogenic Technique*.

General Chapters

GEL-CLOT TECHNIQUE

The gel-clot technique is used for detecting or quantifying endotoxins based on clotting of the lysate reagent in the presence of endotoxin. The minimum concentration of endotoxin required to cause the lysate to clot under standard conditions is the labeled sensitivity of the lysate reagent. To ensure both the precision and validity of the test, perform the tests for confirming the labeled lysate sensitivity and for interfering factors as described in *Preparatory Testing*, immediately below.

Preparatory Testing

TEST FOR CONFIRMATION OF LABELED LYSATE SENSITIVITY

Confirm in four replicates the labeled sensitivity, λ, expressed in EU/mL of the lysate prior to use in the test. The test for confirmation of lysate sensitivity is to be carried out when a new batch of lysate is used or when there is any change in the test conditions that may affect the outcome of the test. Prepare standard solutions having at least four concentrations equivalent to 2λ, λ, 0.5λ, and 0.25λ by diluting the USP Endotoxin RS with *Water for BET*.

Mix a volume of the *Lysate TS* with an equal volume (such as 0.1-mL aliquots) of one of the *Standard Endotoxin Solutions* in each test tube. When single test vials or ampuls containing lyophilized lysate are used, add solutions directly to the vial or ampul. Incubate the reaction mixture for a constant period according to the directions of the lysate manufacturer (usually at 37 ± 1° for 60 ± 2 min), avoiding vibration. To test the integrity of the gel, take each tube in turn directly from the incubator, and invert it through about 180° in one smooth motion. If a firm gel has formed that remains in place upon inversion, record the result as positive. A result is negative if an intact gel is not formed. The test is considered valid when the lowest concentration of the standard solutions shows a negative result in all replicate tests.

The endpoint is the smallest concentration in the series of decreasing concentrations of standard endotoxin that clots the lysate. Determine the geometric mean endpoint by calculating the mean of the logarithms of the endpoint concentrations of the four replicate series and then taking the antilogarithm of the mean value, as indicated in the following formula:

geometric mean endpoint concentration = antilog ($\Sigma e/f$)

where Σe is the sum of the log endpoint concentrations of the dilution series used, and *f* is the number of replicate test tubes. The geometric mean endpoint concentration is the measured sensitivity of the lysate (in EU/mL). If this is not less than 0.5λ and not more than 2λ, the labeled sensitivity is confirmed and is used in tests performed with this lysate.

•[2] *K* is 5 USP-EU/kg of body weight for any route of administration other than intrathecal (for which *K* is 0.2 USP-EU/kg of body weight). For radiopharmaceutical products not administered intrathecally, the endotoxin limit is calculated as 175 EU/*V*, where *V* is the maximum recommended dose in mL. For intrathecally administered radiopharmaceuticals, the endotoxin limit is obtained by the formula 14 EU/*V*. For formulations (usually anticancer products) administered on a per square meter of body surface, the formula is *K*/*M*, where *K* = 100 EU/m^2 and *M* is the maximum dose/m^2.•

TEST FOR INTERFERING FACTORS

Usually prepare solutions *(A–D)* as shown in *Table 1*, and perform the inhibition/enhancement test on the *Sample Solutions* at a dilution less than the MVD, not containing any detectable endotoxins, operating as described for *Test for Confirmation of Labeled Lysate Sensitivity*. The geometric mean endpoint concentrations of *Solutions B* and *C* are determined using the formula described in the *Test for Confirmation of Labeled Lysate Sensitivity*. The test for interfering factors must be repeated when any condition changes that is likely to influence the result of the test.

Table 1. Preparation of Solutions for the Inhibition/Enhancement Test for Gel-Clot Techniques

Solution	Endotoxin Concentration/ Solution to Which Endotoxin Is Added	Diluent	Dilution Factor	Endotoxin Concentration	Number of Replicates
A[a]	None/*Sample Solution*	—	—	—	4
B[b]	2λ/*Sample Solution*	*Sample Solution*	1	2λ	4
			2	1λ	4
			4	0.5λ	4
			8	0.25λ	4
C[c]	2λ/*Water for BET*	*Water for BET*	1	2λ	2
			2	1λ	2
			4	0.5λ	2
			8	0.25λ	2
D[d]	None/*Water for BET*	—	—	—	2

[a] *Solution A*: A *Sample Solution* of the preparation under test that is free of detectable endotoxins.
[b] *Solution B*: Test for interference.
[c] *Solution C*: Control for labeled lysate sensitivity.
[d] *Solution D*: Negative control of *Water for BET*.

The test is considered valid when all replicates of *Solutions A* and *D* show no reaction and the result of *Solution C* confirms the labeled sensitivity.

If the sensitivity of the lysate determined in the presence of *Solution B* is not less than 0.5λ and not greater than 2λ, the *Sample Solution* does not contain factors that interfere under the experimental conditions used. Otherwise, the *Sample Solution* to be examined interferes with the test.

If the sample under test does not comply with the test at a dilution less than the MVD, repeat the test using a greater dilution, not exceeding the MVD. The use of a more sensitive lysate permits a greater dilution of the sample to be examined, and this may contribute to the elimination of interference.

Interference may be overcome by suitable treatment such as filtration, neutralization, dialysis, or heating. To establish that the chosen treatment effectively eliminates interference without loss of endotoxins, perform the assay described above using the preparation to be examined to which Standard Endotoxin has been added and which has then been submitted to the chosen treatment.

Limit Test

PROCEDURE

Prepare *Solutions A, B, C,* and *D* as shown in *Table 2*, and perform the test on these solutions following the procedure above for *Preparatory Testing, Test for Confirmation of Labeled Lysate Sensitivity*.

Table 2. Preparation of Solutions for the Gel-Clot Limit Test

Solution*	Endotoxin Concentration/ Solution to Which Endotoxin Is Added	Number of Replicates
A	None/Diluted *Sample Solution*	2
B	2λ/Diluted *Sample Solution*	2
C	2λ/*Water for BET*	2
D	None/*Water for BET*	2

* Prepare *Solution A* and the positive product control *Solution B* using a dilution not greater than the MVD and treatments as described for the *Test for Interfering Factors* in *Preparatory Testing*. The positive control *Solutions B* and *C* contain the *Standard Endotoxin Solution* at a concentration corresponding to twice the labeled lysate sensitivity. The negative control *Solution D* consists of *Water for BET*.

General Chapters

INTERPRETATION

The test is considered valid when both replicates of *Solutions B* and *C* are positive and those of *Solution D* are negative. When a negative result is found for both replicates of *Solution A,* the preparation under test complies with the test. When a positive result is found for both replicates of *Solution A,* the preparation under test does not comply with the test.

When a positive result is found for one replicate of *Solution A* and a negative result is found for the other, repeat the test. In the repeat test, the preparation under test complies with the test if a negative result is found for both replicates of *Solution A.* The preparation does not comply with the test if a positive result is found for one or both replicates of *Solution A.* However, if the preparation does not comply with the test at a dilution less than the MVD, the test may be repeated using a greater dilution, not exceeding the MVD.

Quantitative Test

PROCEDURE

The test quantifies bacterial endotoxins in *Sample Solutions* by titration to an endpoint. Prepare *Solutions A, B, C,* and *D* as shown in *Table 3,* and test these solutions by following the procedure in *Preparatory Testing, Test for Confirmation of Labeled Lysate Sensitivity.*

Table 3. Preparation of Solutions for the Gel-Clot Assay

Solution	Endotoxin Concentration/ Solution to Which Endotoxin Is Added	Diluent	Dilution Factor	Endotoxin Concentration	Number of Replicates
A[a]	None/*Sample Solution*	*Water for BET*	1	—	2
			2	—	2
			4	—	2
			8	—	2
B[b]	2λ/*Sample Solution*	—	1	2λ	2
C[c]	2λ/*Water for BET*	*Water for BET*	1	2λ	2
			2	1λ	2
			4	0.5λ	2
			8	0.25λ	2
D[d]	None/*Water for BET*	—	—	—	2

[a] *Solution A*: *Sample Solution* under test at the dilution, not to exceed the MVD, with which the *Test for Interfering Factors* was completed. Subsequent dilution of the *Sample Solution* must not exceed the MVD. Use *Water for BET* to make a dilution series of four tubes containing the *Sample Solution* under test at concentrations of 1, $^1/_2$, $^1/_4$, and $^1/_8$ relative to the concentration used in the *Test for Interfering Factors.* Other dilutions up to the MVD may be used as appropriate.

[b] *Solution B*: *Solution A* containing standard endotoxin at a concentration of 2λ (positive product control).

[c] *Solution C*: Two replicates of four tubes of *Water for BET* containing the standard endotoxin at concentrations of 2λ, λ, 0.5λ, and 0.25λ, respectively.

[d] *Solution D*: *Water for BET* (negative control).

CALCULATION AND INTERPRETATION

The test is considered valid when the following three conditions are met: (1) Both replicates of negative control *Solution D* are negative; (2) Both replicates of positive product control *Solution B* are positive; and (3) The geometric mean endpoint concentration of *Solution C* is in the range of 0.5λ to 2λ.

To determine the endotoxin concentration of *Solution A,* calculate the endpoint concentration for each replicate by multiplying each endpoint dilution factor by λ. The endotoxin concentration in the *Sample Solution* is the endpoint concentration of the replicates. If the test is conducted with a diluted *Sample Solution,* calculate the concentration of endotoxin in the original *Sample Solution* by multiplying by the dilution factor. If none of the dilutions of the *Sample Solution* is positive in a valid assay, report the endotoxin concentration as less than λ (if the diluted sample was tested, report as less than λ times the lowest dilution factor of the sample). If all dilutions are positive, the endotoxin concentration is reported as equal to or greater than the greatest dilution factor multiplied by λ (e.g., initial dilution factor times eight times λ in *Table 3*).

The preparation under test meets the requirements of the test if the concentration of endotoxin in both replicates is less than that specified in the individual monograph.

General Chapters

PHOTOMETRIC QUANTITATIVE TECHNIQUES

Turbidimetric Technique

This technique is a photometric assay measuring increases in reactant turbidity. On the basis of the particular assay principle employed, this technique may be classified as either an endpoint-turbidimetric assay or a kinetic-turbidimetric assay. The endpoint-turbidimetric assay is based on the quantitative relationship between the concentration of endotoxins and the turbidity (absorbance or transmission) of the reaction mixture at the end of an incubation period. The kinetic-turbidimetric assay is a method to measure either the time (onset time) needed to reach a predetermined absorbance or transmission of the reaction mixture, or the rate of turbidity development. The test is carried out at the incubation temperature recommended by the lysate manufacturer (which is usually 37 ± 1°).

Chromogenic Technique

This technique is an assay to measure the chromophore released from a suitable chromogenic peptide by the reaction of endotoxins with lysate. On the basis of the particular assay principle employed, this technique may be classified as either an endpoint-chromogenic assay or a kinetic-chromogenic assay. The endpoint-chromogenic assay is based on the quantitative relationship between the concentration of endotoxins and the release of chromophore at the end of an incubation period. The kinetic-chromogenic assay is a method to measure either the time (onset time) needed to reach a predetermined absorbance of the reaction mixture, or the rate of color development. The test is carried out at the incubation temperature recommended by the lysate manufacturer (which is usually 37 ± 1°).

General Chapters

Preparatory Testing

To assure the precision or validity of the turbidimetric and chromogenic techniques, preparatory tests are conducted to verify that the criteria for the standard curve are valid and that the sample solution does not interfere with the test. Validation for the test method is required when conditions that are likely to influence the test result change.

ASSURANCE OF CRITERIA FOR THE STANDARD CURVE

The test must be carried out for each lot of lysate reagent. Using the *Standard Endotoxin Solution,* prepare at least three endotoxin concentrations within the range indicated by the lysate manufacturer to generate the standard curve. Perform the assay using at least three replicates of each standard endotoxin concentration according to the manufacturer's instructions for the lysate (volume ratios, incubation time, temperature, pH, etc.). If the desired range is greater than two logs in the kinetic methods, additional standards should be included to bracket each log increase in the range of the standard curve. The absolute value of the correlation coefficient, *r,* must be greater than or equal to 0.980 for the range of endotoxin concentrations set up.

TEST FOR INTERFERING FACTORS

Select an endotoxin concentration at or near the middle of the endotoxin standard curve. Prepare *Solutions A, B, C,* and *D* as shown in *Table 4*. Perform the test on *Solutions A, B, C,* and *D* at least in duplicate, according to the instructions for the lysate employed, for example, concerning volume of *Sample Solution* and *Lysate TS,* volume ratio of *Sample Solution* to *Lysate TS,* incubation time, etc.

Table 4. Preparation of Solutions for the Inhibition/Enhancement Test for Photometric Techniques

Solution	Endotoxin Concentration	Solution to Which Endotoxin Is Added	Number of Replicates
A[a]	None	*Sample Solution*	Not less than 2
B[b]	Middle concentration of the standard curve	*Sample Solution*	Not less than 2
C[c]	At least three concentrations (lowest concentration is designated λ)	*Water for BET*	Each not less than 2
D[d]	None	*Water for BET*	Not less than 2

[a] *Solution A*: The *Sample Solution* may be diluted not to exceed MVD.
[b] *Solution B*: The preparation under test at the same dilution as *Solution A,* containing added endotoxin at a concentration equal to or near the middle of the standard curve.
[c] *Solution C*: The standard endotoxin at the concentrations used in the validation of the method described for *Assurance of Criteria for the Standard Curve* under *Preparatory Testing* (positive controls).
[d] *Solution D*: *Water for BET* (negative control).

The test is considered valid when the following conditions are met.

1. The absolute value of the correlation coefficient of the standard curve generated using *Solution C* is greater than or equal to 0.980.
2. The result with *Solution D* does not exceed the limit of the blank value required in the description of the lysate reagent employed, or it is less than the endotoxin detection limit of the lysate reagent employed.

Calculate the mean recovery of the added endotoxin by subtracting the mean endotoxin concentration in the solution, if any (*Solution A, Table 4*), from that containing the added endotoxin (*Solution B, Table 4*). In order to be considered free of factors that interfere with the assay under the conditions of the test, the measured concentration of the endotoxin added to the *Sample Solution* must be within 50%–200% of the known added endotoxin concentration after subtraction of any endotoxin detected in the solution without added endotoxin.

When the endotoxin recovery is out of the specified range, the *Sample Solution* under test is considered to contain interfering factors. Then, repeat the test using a greater dilution, not exceeding the MVD. Furthermore, interference of the *Sample Solution* or diluted *Sample Solution* not to exceed the MVD may be eliminated by suitable validated treatment such as filtration, neutralization, dialysis, or heat treatment. To establish that the chosen treatment effectively eliminates interference without loss of endotoxins, perform the assay described above, using the preparation to be examined to which Standard Endotoxin has been added and which has then been submitted to the chosen treatment.

Test Procedure

Follow the procedure described for *Test for Interfering Factors* under *Preparatory Testing*, immediately above.

Calculation

Calculate the endotoxin concentration of each of the replicates of *Solution A*, using the standard curve generated by the positive control *Solution C*. The test is considered valid when the following three requirements are met.

1. The results of the control *Solution C* comply with the requirements for validation defined for *Assurance of Criteria for the Standard Curve* under *Preparatory Testing*.
2. The endotoxin recovery, calculated from the concentration found in *Solution B* after subtracting the concentration of endotoxin found in *Solution A*, is within the range of 50%–200%.
3. The result of the negative control *Solution D* does not exceed the limit of the blank value required in the description of the lysate employed, or it is less than the endotoxin detection limit of the lysate reagent employed.

Interpretation

In photometric assays, the preparation under test complies with the test if the mean endotoxin concentration of the replicates of *Solution A*, after correction for dilution and concentration, is less than the endotoxin limit for the product.

〈87〉 BIOLOGICAL REACTIVITY TESTS, IN VITRO

The following tests are designed to determine the biological reactivity of mammalian cell cultures following contact with the elastomeric plastics and other polymeric materials with direct or indirect patient contact or of specific extracts prepared from the materials under test. It is essential that the tests be performed on the specified surface area. When the surface area of the specimen cannot be determined, use 0.1 g of elastomer or 0.2 g of plastic or other material for every mL of extraction fluid. Exercise care in the preparation of the materials to prevent contamination with microorganisms and other foreign matter.

Three tests are described (i.e., the *Agar Diffusion Test*, the *Direct Contact Test*, and the *Elution Test*).[1] The decision as to which type of test or the number of tests to be performed to assess the potential biological response of a specific sample or extract depends upon the material, the final product, and its intended use. Other factors that may also affect the suitability of a sample for a specific use are the polymeric composition; processing and cleaning procedures; contacting media; inks; adhesives; absorption, adsorption, and permeability of preservatives; and conditions of storage. Evaluation of such factors should be made by appropriate additional specific tests before determining that a product made from a specific material is suitable for its intended use. Materials that fail the *in vitro* tests are candidates for the *in vivo* tests described in *Biological Reactivity Tests, In Vivo* 〈88〉.

[1] Further details are given in the following publications of the American Society for Testing and Materials, 1916 Race St., Philadelphia, PA 19103: Standard test method for agar diffusion cell culture screening for cytotoxicity, ASTM Designation F 895-84; Standard practice for direct contact cell culture evaluation of materials for medical devices, ASTM Designation F 813-83.

General Chapters

PROCEDURES

- **TEST CONTROL**

Positive control: Polyurethane film containing zinc diethyldithiocarbamate (ZDEC)[2] or zinc dibutyldithiocarbamate (ZDBC)

Cell culture preparation: Prepare multiple cultures of L-929 (ATCC cell line CCL 1, NCTC clone 929; alternative cell lines obtained from a standard repository may be used with suitable validation) mammalian fibroblast cells in serum-supplemented minimum essential medium having a seeding density of about 10^5 cells per mL. Incubate the cultures at 37 ± 1° in a humidified incubator for NLT 24 h in a 5 ± 1% carbon dioxide atmosphere until a monolayer, with greater than 80% confluence, is obtained. Examine the prepared cultures under a microscope to ensure uniform, near-confluent monolayers. [NOTE—The reproducibility of the in vitro biological reactivity tests depends upon obtaining uniform cell culture density.]

Extraction solvents: *Sodium Chloride Injection* [see monograph—use *Sodium Chloride Injection* containing 0.9% of sodium chloride (NaCl)]. Alternatively, serum-free mammalian cell culture media or serum-supplemented mammalian cell culture media may be used. Serum supplementation is used when extraction is done at 37° for 24 h.

- **APPARATUS**

Autoclave: Employ an autoclave capable of maintaining a temperature of 121 ± 2°, equipped with a thermometer, a pressure gauge, a vent cock, a rack adequate to accommodate the test containers above the water level, and a water cooling system that will allow for cooling of the test containers to about 20°, but not below 20°, immediately following the heating cycle.

Oven: Use an oven, preferably a mechanical convection model, that will maintain operating temperatures in the range of 50°–70° within ± 2°.

Incubator: Use an incubator capable of maintaining a temperature of 37 ± 1° and a humidified atmosphere of 5 ± 1% carbon dioxide in air.

Extraction containers: Use only containers, such as ampuls or screw-cap culture test tubes, or their equivalent, of Type I glass. If used, culture test tubes, or their equivalent, are closed with a screw cap having a suitable elastomeric liner. The exposed surface of the elastomeric liner is completely protected with an inert solid disk 50–75 µm in thickness. A suitable disk can be fabricated from polytef.

Preparation of apparatus: Cleanse all glassware thoroughly with chromic acid cleansing mixture and, if necessary, with hot nitric acid followed by prolonged rinsing with *Sterile Water for Injection*. Sterilize and dry by a suitable process for containers and devices used for extraction, transfer, or administration of test material. If ethylene oxide is used as the sterilizing agent, allow NLT 48 h for complete degassing.

- **PROCEDURE**

Preparation of sample for extracts: Prepare as directed in the *Procedure* in ⟨88⟩.

Preparation of extracts: Prepare as directed for *Preparation of extracts* in ⟨88⟩ using either *Sodium Chloride Injection* [0.9% sodium chloride (NaCl)] or serum-free mammalian cell culture media as *Extraction solvents*. [NOTE—If extraction is done at 37° for 24 h in an incubator, use cell culture media supplemented by serum. The extraction conditions should not in any instance cause physical changes, such as fusion or melting of the material pieces, other than a slight adherence.]

- **AGAR DIFFUSION TEST**

This test is designed for elastomeric closures in a variety of shapes. The agar layer acts as a cushion to protect the cells from mechanical damage while allowing the diffusion of leachable chemicals from the polymeric specimens. Extracts of materials that are to be tested are applied to a piece of filter paper.

Sample preparation: Use extracts prepared as directed, or use portions of the test specimens having flat surfaces NLT 100 mm^2 in surface area.

Positive control preparation: Proceed as directed for *Sample preparation*.

Negative control preparation: Proceed as directed for *Sample preparation*.

Procedure: Using 7 mL of cell suspension prepared as directed in *Cell culture preparation*, prepare the monolayers in plates having a 60-mm diameter. Following incubation, aspirate the culture medium from the monolayers, and replace it with serum-supplemented culture medium containing NMT 2% of agar. [NOTE—The quality of the agar must be adequate to support cell growth. The agar layer must be thin enough to permit diffusion of leached chemicals.] Place the flat surfaces of *Sample preparation*, *Positive control preparation*, and *Negative control preparation* or their extracts in an appropriate extracting medium, in duplicate cultures in contact with the solidified agar surface. Use no more than three specimens per prepared plate. Incubate all cultures for NLT 24 h at 37 ± 1°, preferably in a humidified incubator containing 5 ± 1% of carbon dioxide. Examine each culture around each sample, negative control, and positive control under a microscope, using a suitable stain, if desired.

Interpretation of results: The biological reactivity (cellular degeneration and malformation) is described and rated on a scale of 0–4 (see *Table 1*). Measure the responses of the cell cultures to the *Sample preparation*, the *Positive control preparation*, and the *Negative control preparation*. The cell culture test system is suitable if the observed responses to the *Negative control preparation* is grade 0 (no reactivity) and to the *Positive control preparation* is at least grade 3 (moderate). The sample meets the requirements of the test if the response to the *Sample preparation* is not greater than grade 2 (mildly reactive). Repeat the procedure if the suitability of the system is not confirmed.

---

[2] ZDEC and ZDBC polyurethanes are available from the Food and Drug Safety Center, Hatano Research Institute, Ochiai 729–5, Hadanoshi, Kanagawa 257, Japan.

Table 1. Reactivity Grades for Agar Diffusion Test and Direct Contact Test

Grade	Reactivity	Description of Reactivity Zone
0	None	No detectable zone around or under specimen
1	Slight	Some malformed or degenerated cells under specimen
2	Mild	Zone limited to area under specimen and less than 0.45 cm beyond specimen
3	Moderate	Zone extends 0.45–1.0 cm beyond specimen
4	Severe	Zone extends greater than 1.0 cm beyond specimen

- **Direct Contact Test**

This test is designed for materials in a variety of shapes. The procedure allows for simultaneous extraction and testing of leachable chemicals from the specimen with a serum-supplemented medium. The procedure is not appropriate for very low- or high-density materials that could cause mechanical damage to the cells.

Sample preparation: Use portions of the test specimen having flat surfaces NLT 100 mm² in surface area.

Positive control preparation: Proceed as directed for *Sample preparation.*

Negative control preparation: Proceed as directed for *Sample preparation.*

Procedure: Using 2 mL of cell suspension prepared as directed in *Cell culture preparation*, prepare the monolayers in plates having a 35-mm diameter. Following incubation, aspirate the culture medium from the cultures, and replace it with 0.8 mL of fresh culture medium. Place a single *Sample preparation*, a *Positive control preparation*, and a *Negative control preparation* in each of the duplicate cultures. Incubate all cultures for NLT 24 h at 37 ± 1° in a humidified incubator containing 5 ± 1% of carbon dioxide. Examine each culture around each *Sample preparation*, a *Positive control preparation*, and a *Negative control preparation*, under a microscope, using a suitable stain, if desired.

Interpretation of results: Proceed as directed for *Interpretation of results* in *Agar Diffusion Test*. The sample meets the requirements of the test if the response to the *Sample preparation* is not greater than grade 2 (mildly reactive). Repeat the procedure if the suitability of the system is not confirmed.

- **Elution Test**

This test is designed for the evaluation of extracts of polymeric materials. The procedure allows for extraction of the specimens at physiological or nonphysiological temperatures for varying time intervals. It is appropriate for high-density materials and for dose-response evaluations.

Sample preparation: Prepare as directed in *Preparation of extracts*, using either *Sodium Chloride Injection* [0.9% sodium chloride (NaCl)] or serum-free mammalian cell culture media as *Extraction solvents*. If the size of the sample cannot be readily measured, a mass of NLT 0.1 g of elastomeric material or 0.2 g of plastic or polymeric material per mL of extraction medium may be used. Alternatively, use serum-supplemented mammalian cell culture media as the extracting medium to simulate more closely physiological conditions. Prepare the extracts by heating for 24 h in an incubator containing 5 ± 1% of carbon dioxide. Maintain the extraction temperature at 37 ± 1°, because higher temperatures may cause denaturation of serum proteins.

Positive control preparation: Proceed as directed for *Sample preparation.*

Negative control preparation: Proceed as directed for *Sample preparation.*

Procedure: Using 2 mL of cell suspension prepared as directed in *Cell culture preparation*, prepare the monolayers in plates having a 35-mm diameter. Following incubation, aspirate the culture medium from the monolayers, and replace it with extracts of the *Sample preparation*, *Positive control preparation*, or *Negative control preparation*. The serum-supplemented and serum-free cell culture media extracts are tested in duplicate without dilution (100%). The *Sodium Chloride Injection* extract is diluted with serum-supplemented cell culture medium and tested in duplicate at 25% extract concentration. Incubate all cultures for 48 h at 37 ± 1° in a humidified incubator preferably containing 5 ± 1% of carbon dioxide. Examine each culture at 48 h, under a microscope, using a suitable stain, if desired.

Interpretation of results: Proceed as directed for *Interpretation of results* in *Agar Diffusion Test* but use *Table 2*. The sample meets the requirements of the test if the response to the *Sample preparation* is not greater than grade 2 (mildly reactive). Repeat the procedure if the suitability of the system is not confirmed. For dose-response evaluations, repeat the procedure, using quantitative dilutions of the sample extract.

Table 2. Reactivity Grades for Elution Test

Grade	Reactivity	Conditions of All Cultures
0	None	Discrete intracytoplasmic granules; no cell lysis
1	Slight	Less than or equal to 20% of the cells are round, loosely attached, and without intracytoplasmic granules; occasional lysed cells are present
2	Mild	Greater than 20% to less than or equal to 50% of the cells are round and devoid of intracytoplasmic granules; no extensive cell lysis and empty areas between cells
3	Moderate	Greater than 50% to less than 70% of the cell layers contain rounded cells or are lysed
4	Severe	Nearly complete destruction of the cell layers

ADDITIONAL REQUIREMENTS

- **USP Reference Standards ⟨11⟩**
  USP High-Density Polyethylene RS (Negative Control)

⟨88⟩ BIOLOGICAL REACTIVITY TESTS, IN VIVO

The following tests are designed to determine the biological response of animals to elastomerics, plastics, and other polymeric material with direct or indirect patient contact, or by the injection of specific extracts prepared from the material under test. It is essential to make available the specific surface area for extraction. When the surface area of the specimen cannot be determined, use 0.1 g of elastomer or 0.2 g of plastic or other material for every mL of extraction fluid. Also, it is essential to exercise care in the preparation of the materials to be injected or instilled to prevent contamination with microorganisms and other foreign matter. Three tests are described. The *Systemic Injection Test* and the *Intracutaneous Test* are used for elastomeric materials, especially to elastomeric closures for which the appropriate *Biological Reactivity Tests, In Vitro* ⟨87⟩ have indicated significant biological reactivity. These two tests are used for plastics and other polymers, in addition to a third test, the *Implantation Test,* to test the suitability of these materials intended for use in fabricating containers and accessories thereto, for use in parenteral preparations, and for use in medical devices, implants, and other systems.

These three tests are applied to materials or medical devices, if there is a need for classification of plastics and other polymers based on in vivo biological reactivity testing.

For the purpose of this chapter, these definitions apply: the *Sample* is the specimen under test or an extract prepared from such a specimen. A *Blank* consists of the same quantity of the same extracting medium that is used for the extraction of the specimen under test, treated in the same manner as the extracting medium containing the specimen under test. A *Negative Control*[1] is a specimen that gives no reaction under the conditions of the test.

CLASSIFICATION OF PLASTICS

Six Plastic Classes are defined (see *Table 1*). This classification is based on responses to a series of in vivo tests for which extracts, materials, and routes of administration are specified. These tests are directly related to the intended end-use of the plastic articles. The choice of extractants is representative of the vehicles in preparations with which the plastics are likely to be in contact. The *Table 1* classification facilitates communication among suppliers, users, and manufacturers of plastics by summarizing the tests to be performed for containers for injections and medical devices if a need for classification exists.

Table 1. Classification of Plastics

Plastic Classes[a]						Tests to be Conducted			
I	II	III	IV	V	VI	Test Material	Animal	Dose	Procedure[b]
x	x	x	x	x	x	Extract of *Sample* in *Sodium Chloride Injection*	Mouse	50 mL/kg	A (IV)
x	x	x	x	x	x		Rabbit or Guinea Pig	0.2 mL/animal at each of 10 or 6 sites	B (IC)
	x	x	x	x	x	Extract of *Sample* in *1 in 20 Solution of Alcohol in Sodium Chloride Injection*	Mouse	50 mL/kg	A (IP)
	x	x	x	x	x		Rabbit or Guinea Pig	0.2 mL/animal at each of 10 or 6 sites	B (IC)
		x		x	x	Extract of *Sample* in *Polyethylene Glycol 400*	Mouse	10 g/kg	A (IP)
				x	x		Rabbit or Guinea Pig	0.2 mL/animal at each of 10 or 6 sites	B (IC)
		x	x	x	x	Extract of *Sample* in *Vegetable Oil*	Mouse	50 mL/kg	A (IP)
			x	x	x		Rabbit or Guinea Pig	0.2 mL/animal at each of 10 or 6 sites	B (IC)
			x		x	Implant strips of *Sample*	Rabbit	4 strips/animal	C
			x		x	Implant *Sample*	Rat	2 *Samples*/animal	C

[a] Tests required for each class are indicated by "x" in appropriate columns.
[b] Legend: A (IP)—Systemic Injection Test (intraperitoneal); B (IC)—Intracutaneous Test (intracutaneous); C—Implantation Test (intramuscular or subcutaneous implantation).

With the exception of the *Implantation Test,* the procedures are based on the use of extracts that, depending on the heat resistance of the material, are prepared at one of three standard temperatures: 50°, 70°, and 121°. Therefore, the class designation of a plastic must be accompanied by an indication of the temperature of extraction (e.g., IV-121°, which represents a class IV plastic extracted at 121°, or I-50°, which represents a class I plastic extracted at 50°).

[1] USP High-Density Polyethylene RS.

Plastics may be classified as USP Plastic Classes I–VI only on the basis of the response criteria prescribed in *Table 1*.

This classification does not apply to plastics that are intended for use as containers for oral or topical products, or that may be used as an integral part of a drug formulation. *Table 1* does not apply to natural elastomers, which are to be tested in Sodium Chloride Injection and vegetable oils only.

The *Systemic Injection Test* and the *Intracutaneous Test* are designed to determine the systemic and local, respectively, biological responses of animals to plastics and other polymers by the single-dose injection of specific extracts prepared from a *Sample*. The *Implantation Test* is designed to evaluate the reaction of living tissue to the plastic and other polymers by the implantation of the *Sample* itself into animal tissue. The proper preparation and placement of the specimens under aseptic conditions are important in the conduct of the *Implantation Test*.

These tests are designed for application to plastics and other polymers in the condition in which they are used. If the material is to be exposed to any cleansing or sterilization process prior to its end-use, then the tests are to be conducted on a *Sample* prepared from a specimen preconditioned by the same processing.

Factors such as material composition, processing and cleaning procedures, contacting media, inks, adhesives, absorption, adsorption and permeability of preservatives, and conditions of storage may also affect the suitability of a material for a specific use. Evaluation of such factors should be made by appropriate additional specific tests to determine the suitability of a material for its intended use.

USP Reference Standards ⟨11⟩—*USP High-Density Polyethylene RS*.

Extracting Media—

SODIUM CHLORIDE INJECTION (see monograph). Use Sodium Chloride Injection containing 0.9% of NaCl.

1 IN 20 SOLUTION OF ALCOHOL IN SODIUM CHLORIDE INJECTION.

POLYETHYLENE GLYCOL 400 (see monograph).

VEGETABLE OIL— Use freshly refined Sesame Oil (see monograph) or Cottonseed Oil (see monograph) or other suitable vegetable oils.

DRUG PRODUCT VEHICLE (where applicable).

WATER FOR INJECTION (see monograph).

NOTE—The Sesame Oil or Cottonseed Oil or other suitable vegetable oil meets the following additional requirements. Obtain, if possible, freshly refined oil. Use three properly prepared animals, and inject the oil intracutaneously in a dose of 0.2 mL into each of 10 sites per animal, and observe the animals at 24, 48, and 72 h following injection. Rate the observations at each site on the numerical scale indicated in *Table 2*. For the 3 rabbits or guinea pigs (30 or 18 injection sites), at any observation time, the average response for erythema is not greater than 0.5 and for edema is not greater than 1.0, and no site shows a tissue reaction larger than 10 mm in overall diameter. The residue of oil at the injection site should not be misinterpreted as edema. Edematous tissue blanches when gentle pressure is applied.

Table 2. Evaluation of Skin Reactions[a]

Erythema and Eschar Formation	Score
No erythema	0
Very slight erythema (barely perceptible)	1
Well-defined erythema	2
Moderate to severe erythema	3
Severe erythema (beet-redness) to slight eschar formation (injuries in depth)	4
Edema Formation[b]	**Score**
No edema	0
Very slight edema (barely perceptible)	1
Slight edema (edges of area well defined by definite raising)	2
Moderate edema (raised approximately 1 mm)	3
Severe edema (raised more than 1 mm and extending beyond the area of exposure)	4

[a] Draize JH, Woodward G, Calvery HO. Methods for the study of irritation and toxicity of substances applied topically to the skin and mucous membranes. *J Pharmacol Exp Ther* 1944;82:377–390.

[b] Excludes noninflammatory (mechanical) edema from the blank or extraction fluid.

Apparatus—The apparatus for the tests includes the following.

AUTOCLAVE—Use an autoclave capable of maintaining a temperature of 121 ± 2.0°, equipped with a thermometer, a pressure gauge, a vent cock, a rack adequate to accommodate the test containers above the water level, and a water cooling system that will allow for cooling of the test containers to about, but not below, 20° immediately following the heating cycle.

OVEN—Use an oven, preferably a forced-circulation model, that will maintain operating temperatures of 50° or 70° within ±2°.

EXTRACTION CONTAINERS—Use only containers, such as ampuls or screw-cap culture test tubes, of Type I glass. If used, culture test tubes are closed with screw caps having suitable elastomeric liners. The exposed surface of the elastomeric liner is completely protected with an inert solid disk 0.05–0.075 mm in thickness. A suitable disk may be fabricated from a polytef resin.

Preparation of Apparatus—Cleanse all glassware thoroughly with chromic acid cleansing mixture, or if necessary, with hot nitric acid, followed by prolonged rinsing with water. Clean cutting utensils by an appropriate method (e.g., successive clean-

General Chapters

ing with acetone and methylene chloride) prior to use in subdividing a specimen. Clean all other equipment by thorough scrubbing with a suitable detergent and prolonged rinsing with water.

Render containers and equipment used for extraction, and in transfer and administration of test material, sterile and dry by a suitable process. [NOTE—If ethylene oxide is used as the sterilizing agent, allow adequate time for complete degassing.]

Procedure—

PREPARATION OF SAMPLE—Both the *Systemic Injection Test* and the *Intracutaneous Test* may be performed using the same extract, if desired, or separate extracts may be made for each test. Select and subdivide into portions a *Sample* of the size indicated in *Table 3*. Remove particulate matter, such as lint and free particles, by treating each subdivided *Sample* or *Negative Control* as follows. Place the *Sample* into a clean, glass-stoppered, 100-mL graduated cylinder of Type I glass, and add about 70 mL of *Water for Injection*. Agitate for about 30 s, and drain off the water. Repeat this step, and dry those pieces prepared for the extraction with *Vegetable Oil* in an oven at a temperature not exceeding 50°. [NOTE—Do not clean the *Sample* with a dry or wet cloth or by rinsing or washing with an organic solvent, surfactant, etc.]

Table 3. Surface Area of Specimen To Be Used[a]

Form of Material	Thickness	Amount of Sample for each 20 mL of Extracting Medium	Subdivided into
Film or sheet	<0.5 mm	Equivalent of 120 cm^2 total surface area (both sides combined)	Strips of about 5 × 0.3 cm
	0.5–1 mm	Equivalent of 60 cm^2 total surface area (both sides combined)	
Tubing	<0.5 mm (wall)	Length (in cm) = 120 cm^2/(sum of ID and OD circumferences)	Sections of about 5 × 0.3 cm
	0.5–1 mm (wall)	Length (in cm) = 60 cm^2/(sum of ID and OD circumferences)	
Slabs, tubing, and molded items	>1 mm	Equivalent of 60 cm^2 total surface area (all exposed surfaces combined)	Pieces up to about 5 × 0.3 cm
Elastomers	>1 mm	Equivalent of 25 cm^2 total surface area (all exposed surfaces combined)	Do not subdivide[b]

[a] When surface area cannot be determined due to the configuration of the specimen, use 0.1 g of elastomer or 0.2 g of plastic or other polymers for every 1 mL of extracting fluid.
[b] Molded elastomeric closures are tested intact.

PREPARATION OF EXTRACTS—Place a properly prepared *Sample* to be tested in an extraction container, and add 20 mL of the appropriate extracting medium. Repeat these directions for each extracting medium required for testing. Also, prepare one 20-mL blank of each medium for parallel injections and comparisons. Extract by heating in an autoclave at 121° for 60 min, in an oven at 70° for 24 h, or at 50° for 72 h. Allow adequate time for the liquid within the container to reach the extraction temperature. [NOTE—The extraction conditions should not in any instance cause physical changes such as fusion or melting of the *Sample* pieces, which result in a decrease in the available surface area. A slight adherence of the pieces can be tolerated. Always add the cleaned pieces individually to the extracting medium. If culture tubes are used for autoclave extractions with *Vegetable Oil*, seal screw caps adequately with pressure-sensitive tape.]

Cool to about room temperature but not below 20°, shake vigorously for several minutes, and decant each extract immediately, using aseptic precautions, into a dry, sterile vessel. Store the extracts at a temperature of 20°–30°, and do not use for tests after 24 h. Of importance are the contact of the extracting medium with the available surface area of the plastic and the time and temperature during extraction, the proper cooling, agitation, and decanting process, and the aseptic handling and storage of the extracts following extraction.

SYSTEMIC INJECTION TEST

This test is designed to evaluate systemic responses to the extracts of materials under test following injection into mice. Alternate routes of injection may be used with justification.

Test Animals—Use healthy, not previously used albino mice weighing 17–23 g. For each test group use only mice of the same source. Allow water and food, commonly used for laboratory animals and of known composition, ad libitum.

Procedure—[NOTE—Agitate each extract vigorously prior to withdrawal of injection doses to ensure even distribution of the extracted matter.] Inject each of the five mice in a test group with the *Sample* or the *Blank* as outlined in *Table 4*, except to dilute each g of the extract of the *Sample* prepared with *Polyethylene Glycol 400*, and the corresponding *Blank*, with 4.1 volumes of *Sodium Chloride Injection* to obtain a solution having a concentration of about 200 mg of polyethylene glycol per mL.

Table 4. Injection Procedure—Systemic Injection Test

Extract or Blank	Dose per kg	Route[a]
Sodium Chloride Injection	50 mL	IV
1 in 20 solution of Alcohol in Sodium Chloride Injection	50 mL	IV

[a] IV = intravenous (aqueous sample and blank); IP = intraperitoneal (oleaginous sample and blank).

Table 4. Injection Procedure—Systemic Injection Test *(Continued)*

Extract or Blank	Dose per kg	Route[a]
Polyethylene Glycol 400	10 g	IP
Drug product vehicle (where applicable)	50 mL	IV
	50 mL	IP
Vegetable Oil	50 mL	IP

[a] IV = intravenous (aqueous sample and blank); IP = intraperitoneal (oleaginous sample and blank).

Observe the animals immediately after injection, again 4 h after injection, and then at least at 24, 48, and 72 h. If during the observation period none of the animals treated with the extract of the *Sample* shows a significantly greater biological reactivity than the animals treated with the *Blank*, the *Sample* meets the requirements of this test. If two or more mice die, or if abnormal behavior such as convulsions or prostration occurs in two or more mice, or if a body weight loss greater than 2 g occurs in three or more mice, the *Sample* does not meet the requirements of the test. If any animals treated with the *Sample* show only slight signs of biological reactivity, and not more than one animal shows gross symptoms of biological reactivity or dies, repeat the test using groups of 10 mice. On the repeat test, all 10 animals treated with the *Sample* show no significant biological reactivity above the *Blank* animals during the observation period.

INTRACUTANEOUS TEST

This test is designed to evaluate local responses to the extracts of materials under test following intracutaneous injection into rabbits or guinea pigs.

Test Animals—Select healthy, rabbits or guinea pigs with fur that can be clipped closely and skin that is free from mechanical irritation or trauma. In handling the animals, avoid touching the injection sites during observation periods, except to discriminate between edema and an oil residue.

Procedure—[NOTE—Agitate each extract vigorously prior to withdrawal of injection doses to ensure even distribution of the extracted matter.] On the day of the test, closely clip the fur on the animal's back on both sides of the spinal column over a sufficiently large test area. Avoid mechanical irritation and trauma. Remove loose hair by means of vacuum. If necessary, swab the skin lightly with diluted alcohol, and dry the skin prior to injection. More than one extract from a given material can be used per rabbit or guinea pig, if it is determined that the test results will not be affected. For each *Sample* use two animals and inject each intracutaneously, using one side of the animal for the *Sample* and the other side for the *Blank*, as outlined in *Table 5*. [NOTE—Dilute each g of the extract of the *Sample* prepared with *Polyethylene Glycol 400*, and the corresponding *Blank*, with 7.4 volumes of *Sodium Chloride Injection* to obtain a solution having a concentration of about 120 mg of polyethylene glycol per mL.]

Table 5. Intracutaneous Test

Extract or Blank	Number of Sites (per animal)	Dose (μL per site)
Sample	5	200
Blank	5	200

Examine injection sites for evidence of any tissue reaction such as erythema, edema, and necrosis. Swab the skin lightly, if necessary, with diluted alcohol to facilitate reading of injection sites. Observe all animals at 24, 48, and 72 h after injection. Rate the observations on a numerical scale for the extract of the *Sample* and for the *Blank*, using *Table 2*. Reclip the fur as necessary during the observation period. The average erythema and edema scores for *Sample* and *Blank* sites are determined at every scoring interval (24, 48, and 72 h) for each rabbit or guinea pig. After the 72-hour scoring, all erythema scores plus edema scores are totalled separately for each *Sample* and *Blank*. Divide each of the totals by 12 (2 animals × 3 scoring periods × 2 scoring categories) to determine the overall mean score for each *Sample* versus each corresponding *Blank*. The requirements of the test are met if the difference between the *Sample* and the *Blank* mean score is 1.0 or less. If at any observation period the average reaction to the *Sample* is questionably greater than the average reaction to the *Blank*, repeat the test using three additional rabbits or guinea pigs. The requirements of the test are met if the difference between the *Sample* and the *Blank* mean score is 1.0 or less.

IMPLANTATION TEST

The implantation test is designed for the evaluation of plastic materials and other polymeric materials in direct contact with living tissue. Of importance are the proper preparation of the implant strips and their proper implantation under aseptic conditions. The intramuscular implantation test requires healthy adult New Zealand rabbits. The test specimens are placed into needles as the delivery system for implantation. Although most materials lend themselves readily to this method, there are a number of materials that are unsuitable for intramuscular implantation. For materials with physical characteristics unsuitable for routine intramuscular implantation, the subcutaneous rat implantation model is a viable alternative.

Intramuscular Implantation in Rabbits

Prepare for implantation 8 strips of the *Sample* and 4 strips of USP High-Density Polyethylene RS. Each strip should measure not less than 10 × 1 mm. The edges of the strips should be as smooth as possible to avoid additional mechanical trauma upon implantation. Strips of the specified minimum size are implanted by means of a hypodermic needle (15–19 gauge) with intravenous point and a sterile trocar. Use either presterilized needles into which the sterile plastic strips are aseptically inserted, or insert each clean strip into a needle, the cannula and hub of which are protected with an appropriate cover, and then subjected to the appropriate sterilization procedure. [NOTE—Allow for proper degassing if agents such as ethylene oxide are used.]

Test Animals—Select healthy, adult rabbits weighing not less than 2.5 kg, and with paravertebral muscles that are sufficiently large in size to allow for implantation of the test strips. Do not use any muscular tissue other than the paravertebral site. The animals must be anesthetized with a commonly used anesthetic agent to a degree deep enough to prevent muscular movements, such as twitching. See the Association for Assessment and Accreditation of Laboratory Animal Care (AAALAC) guidelines.

Procedure—Perform the test in a clean area. On the day of the test or up to 20 h before testing, clip the fur of the animals on both sides of the spinal column. Remove loose hair by means of vacuum. Swab the skin lightly with diluted alcohol, and dry the skin prior to injection.

Implant four strips of the *Sample* into the paravertebral muscle on one side of the spine of each of two rabbits, 2.5–5 cm from the midline and parallel to the spinal column, and about 2.5 cm apart from each other. In a similar fashion implant two strips of USP High-Density Polyethylene RS in the opposite muscle of each animal. Insert a sterile stylet into the needle to hold the implant strip in the tissue while withdrawing the needle. If excessive bleeding is observed after implantation of a strip, place a duplicate strip at another site.

Keep the animals for a period of not less than 120 h, and sacrifice them at the end of the observation period by administering an overdose of an anesthetic agent or other suitable agents. Allow sufficient time to elapse for the tissue to be cut without bleeding. Examine macroscopically the area of the tissue surrounding the center portion of each implant strip. Use a magnifying lens and auxiliary light source. Observe the *Sample* and *Control* implant sites for hemorrhage, necrosis, discolorations, and infections, and record the observations. Measure encapsulation, if present, by recording the width of the capsule (from the periphery of the space occupied by the implant *Control* or *Sample* to the periphery of the capsule) rounded to the nearest 0.1 mm. Score encapsulation according to *Table 6*.

Table 6. Evaluation of Encapsulation in the Implantation Test

Capsule Width	Score
None	0
Up to 0.5 mm	1
0.6–1.0 mm	2
1.1–2.0 mm	3
Greater than 2.0 mm	4

Calculate the differences between average scores for the *Sample* and *Control* sites. The requirements of the test are met if the difference does not exceed 1.0, or if the difference between the *Sample* and *Control* mean scores for more than one of the four implant sites does not exceed 1 for any implanted animal.

Subcutaneous Implantation in Rats

Prepare for implantation 10 sample specimens and 10 control specimens. The size and shape of the control specimens shall be as similar to that of the test specimens as practically possible. For example, specimens made of sheeting material shall be 10–12 mm in diameter and from 0.3–1 mm in thickness. The edges of the specimens should be as smooth as possible to avoid additional mechanical trauma upon implantation.

Test Animals—Select healthy albino rats weighing 225–350 g at the time of implantation.

Procedure—Perform the test in a clean area. Anesthetize (see AAALAC guidelines) the animal until a surgical plane is achieved. Clip the fur of the animals on both sides of the spinal column. Remove loose hair by means of vacuum. Clean the clipped area with povidone–iodine solution. Using aseptic technique, make two midline incisions (approximately 1.0 cm long) through the skin at the cranial and caudal regions on the dorsal surface. Using blunt dissection, separate the fascia connecting skin to muscle to form a pocket underneath the skin lateral to each side of the incision (base of pocket approximately 20 mm from the line of implant). Insert a sterile sample into each pocket, and close the incision with wound clips or sutures. Implant two test samples and two control samples in each of five rats. Keep the animals for a period of at least seven days, and sacrifice them at the end of the observation period by CO_2 induced hypoxia or administering an overdose of an anesthetic agent. Allow sufficient time to elapse for the tissue to be cut without bleeding. Cut the skin (dorsal surface) longitudinally and lay back. Carefully examine macroscopically the area of the tissue surrounding the implant. Cut the sample in half and remove for close examination of the tissue in direct contact with the sample. Use a magnifying lens and auxiliary light source, if appropriate. Observe the *Sample* and *Control* implant sites for hemorrhage, necrosis, discolorations, and infections, and record the observations. Measure encapsulation, if present, by recording the width of the capsule (from the periphery of the space occupied by

the implant *Control* or *Sample* to the periphery of the capsule) rounded to the nearest 0.1 mm. Score encapsulation according to *Table 6*. Calculate the differences between average scores for the *Sample* and *Control* sites. The requirements of the test are met if the difference does not exceed 1.0.

SAFETY TESTS—BIOLOGICALS

The safety test set forth here is intended to detect in an article any unexpected, unacceptable biological reactivity. This in vivo test is provided for the safety assessment of biotechnology-derived products.

Safety Test

Select five healthy mice not previously used for testing, weighing 17–23 g, unless otherwise directed in the individual monograph or elsewhere in this chapter, and maintained on an adequate balanced diet. Prepare a test solution as directed in the individual monograph. Unless otherwise directed in the individual monograph or elsewhere in this chapter, inject a dose of 0.5 mL of the test solution into each of the mice, using a 26-gauge needle of suitable length, or of the length specified below as applicable. Observe the animals over the 48 h following the injection. If, at the end of 48 h, all of the animals survive and not more than one of the animals shows outward symptoms of a reaction not normally expected of the level of toxicity related to the article, the requirements of this test are met. If one or more animals die or if more than one of the animals shows signs of abnormal or untoward toxicity of the article under test, repeat the test using at least another 10 mice similar to those used in the initial test, but weighing 20 ± 1 g. In either case, if all of the animals survive for 48 h and show no symptoms of a reaction indicative of an abnormal or undue level of toxicity of the article, the requirements of the test are met. Body weights of mice before and at the end of the test should be obtained to detect any untoward effects. Animals that show signs of toxicity should be grossly necropsied and subjected to histopathology if necessary.

For biologics, perform the test according to the procedures prescribed in the *Code of Federal Regulations*, Section 610.11.

⟨89⟩ ENZYMES USED AS ANCILLARY MATERIALS IN PHARMACEUTICAL MANUFACTURING

INTRODUCTION

The purpose of this chapter is to describe the quality attributes and associated tests with acceptance criteria for enzymatic preparations used in biopharmaceutical manufacturing. The quality of ancillary materials, including enzymes, used in biopharmaceutical manufacturing can have an impact on the therapeutic products. Several enzymes are used in this type of cell processing. Examples include trypsin, collagenase, pepsin, and papain. This chapter does not discuss applications of these enzymes but rather focuses on tests to assess their quality as process materials.

Recombinant Trypsin

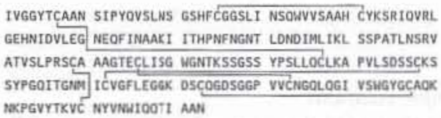

$C_{1020}H_{1597}N_{287}O_{321}S_{14}$
23,463 (for β-Trypsin)
[9002-07-7].

DEFINITION

Recombinant trypsin, a key raw material in biopharmaceutical manufacturing, is a serine protease that cleaves peptide chains mainly at the carboxyl end of the amino acids arginine and lysine. The amino acid sequence of recombinant trypsin is identical to that of trypsin from porcine pancreas, and the recombinant trypsin is produced by methods based on recombinant DNA technology in the yeast *Pichia pastoris*. Therefore, the specifications described in this chapter apply only to recombinant porcine trypsin produced in yeast. Because of the recombinant production process, recombinant trypsin is free of chymotrypsin. Two active forms of trypsin are known: β-trypsin (23,463 daltons) and α-trypsin (23,481 daltons). Autolysis of β-trypsin at the peptide bond between Arg^{99} and Val^{100}, Lys^{125} and Ser^{126}, or Lys^{139} and Ala^{140} results in three possible isoforms of α-trypsin. All isoforms are held together by disulfide bridges and remain correctly folded. As a consequence of hydrolysis of a peptide bond, the molecular weight of α-trypsin is more than that of β-trypsin by 18 daltons. The peak area for β-trypsin is NLT 70%, and the peak area for α-trypsin is NMT 20% as determined by the HPLC procedure described in the test for *Purity*. The specific activity is NLT 180 Units/mg of protein using carbobenzoxy-valyl-glycyl-arginine-4-nitril-anilide acetate as the substrate described in the *Assay*.

General Chapters

[NOTE—One Unit of trypsin activity using carbobenzoxy-valyl-glycyl-arginine-4-nitril-anilide acetate as the substrate corresponds to 21 USP Trypsin Units. One USP Trypsin Unit is the activity causing a change in absorbance of 0.003 per minute under the conditions specified in the *Assay* in the Crystallized Trypsin monograph using *N*-benzoyl-L-arginine ethyl ester hydrochloride as the substrate. Therefore, the specific activity of 180 Units/mg of protein using carbobenzoxy-valyl-glycyl-arginine-4-nitril-anilide acetate as the substrate for recombinant trypsin corresponds to 3800 USP Trypsin Units/mg of protein.]

IDENTIFICATION

- **A.** It meets the requirements in the *Assay*.
- **B.** The retention time of the major peak for β -trypsin in the *Sample solution* corresponds to that of the *Standard solution*, as obtained in the test for *Purity*.

ASSAY

- **PROCEDURE**

Buffer: Dissolve 1.21 g of tris(hydroxymethyl)aminomethane and 0.29 g of calcium chloride dihydrate in 100 mL of water, and adjust with 2 N hydrochloric acid to a pH of 8.0 (at 25 ± 1°).

Substrate stock solution: Dissolve 20 mg of carbobenzoxy-valyl-glycyl-arginine-4-nitril-anilide acetate[1], accurately weighed, in 3.0 mL of water. [NOTE—Use a freshly prepared solution only.]

Substrate solution: Prepare a solution by mixing 28 mL of *Buffer* and 2.8 mL of *Substrate stock solution*. [NOTE—Use a freshly prepared solution only.]

Standard solutions: Precool USP Trypsin Recombinant Porcine RS and water to approximately 4°. Start preparing *Standard solutions* immediately when the temperature has reached 4°. Prepare each *Standard solution* by diluting USP Trypsin Recombinant Porcine RS with water at 1:68,921 dilution. Prepare at least five *Standard solutions* in parallel. Assay each *Standard solution* in duplicate. [NOTE—Use an adjustable pipettor for each measurement and dilution operation. Use polystyrene test tubes for preparing *Standard solutions* and *Sample solutions*, and use polystyrene pipet tips containing polyethylene filters to transfer samples. The pipet tip should not be wet before transfer, and each pipet tip should be used only for transferring one sample.] [NOTE—A dilution of 1:68,921 can be achieved by three dilution steps in which each step has a 1:41 dilution (1:41/1:41/1:41). For example, for the initial dilution withdraw 0.1 mL of USP Trypsin Recombinant Porcine RS using a pipettor with a polystyrene tip containing polyethylene filters, wipe off the outside of the tip to remove any residual solution, add the Reference Standard to a polystyrene test tube containing 4.0 mL of precooled water, rinse the tip by pipetting the solution up and down for 2–3 times, discard the tip, and mix the solution on a vortex mixer for approximately 2 s with maximum speed. For the second and third dilution steps, proceed as described for the initial dilution except for transferring 0.1 mL of solution from the previous dilution step.]

Sample solutions: Prepare at least five *Sample solutions* of recombinant trypsin in parallel as directed for the *Standard solutions* to obtain a final concentration of at least 0.16 Units/mL using precooled water as the diluent. Each *Sample solution* is assayed in duplicate.

Instrumental conditions

(See *Ultraviolet-Visible Spectroscopy* 〈857〉.)

Mode: UV

Analytical wavelength: 405 nm

Pathlength: 1 cm

Temperature: 25°

Analysis

Samples: *Standard solutions* and *Sample solutions*

Transfer 1.10 mL of *Substrate solution* into a polystyrene semimicro cuvette, allow the temperature to stabilize, check the cuvette for the specified temperature, and wait for 10 min. Start the reaction by adding 0.020 mL of *Standard solution* or *Sample solution*. Record the absorbance for at least 5 min, and determine the change in absorbance (ΔA/min) from the linear range of the reaction.

Calculate the activity of recombinant trypsin in Units/mL:

$$\text{Result} = [V_T/(\varepsilon \times V \times B)] \times (\Delta A/\text{min}) \times D$$

V_T = volume of the reaction mixture, 1.12 mL
ε = extinction coefficient for 405 nm, 10.4 ($\text{mmol}^{-1} \cdot 1\ \text{cm}^{-1}$)
V = volume of *Standard solution* or *Sample solution*, 0.020 mL
B = absorption pathlength, 1 cm
D = dilution factor

[NOTE—One Unit will release the equivalent of 1 mmol of 4-nitril aniline from carbobenzoxy-valyl-glycyl-arginine-4-nitril-anilide acetate per min under the conditions of the *Assay*.]

Calculate the specific activity of recombinant trypsin in Units/mg of protein:

[1] A suitable carbobenzoxy-valyl-glycyl-arginine-4-nitril-anilide acetate is Chromozym TRY from Roche Applied Science (catalog number 10378496103) or equivalent.

General Chapters

$$\text{Result} = \text{Activity}/C$$

C = protein concentration of recombinant trypsin (mg/mL)

System suitability

Samples: *Standard solutions* and *Sample solutions*

Suitability requirement: ΔA/min should be 0.03–0.07 for *Standard solutions* and *Sample solutions*. The average calculated activity for the *Standard solutions* is 90%–110% of the value on the label.

Acceptance criteria

Specific activity: NLT 180 Units/mg of protein

Relative standard deviation: NMT 5% for the activities determined from 5 replicates

PURITY

• Procedure

Solution A: Dilute 1 mL of phosphoric acid (85%) with water to 1000 mL.

Solution B: Dilute 1 mL of phosphoric acid (85%) with acetonitrile to 1000 mL.

Mobile phase: See *Table 1*.

Table 1

Time (min)	Solution A (%)	Solution B (%)
0	75	25
25	55	45
30	10	90
34	10	90
35	75	25
45	75	25

Standard solution: Thaw 100 µL of USP Trypsin Recombinant Porcine RS at room temperature for about 1 h, mix, and transfer to an HPLC vial. The target protein concentration should be 70 ± 10 mg/mL.

Sample solution: Thaw 100 µL of recombinant trypsin at room temperature for about 1 h, mix, and transfer to an HPLC vial. The target protein concentration should be 70 ± 10 mg/mL.

[Note—Keep *Standard solution* and *Sample solution* at 2°–8° if they are not ready to be injected immediately after preparation.]

Chromatographic system

(See *Chromatography* ⟨621⟩, *System Suitability*.)

Mode: LC

Detector: UV 280 nm

Column: 4.6-mm × 25-cm; 3-µm packing L1 with a 200 Å pore size

Column temperature: 40°

Flow rate: 1.0 mL/min

Injection volume: 1 µL

System suitability

Sample: *Standard solution*

[Note—The retention time for the main peak of recombinant trypsin is 12–17 min.]

Suitability requirements

Resolution: NLT 1 between the peaks of α-trypsin and β-trypsin

Analysis

Sample: *Sample solution*

Record the chromatograms, and measure the peak areas. Evaluate the purity of trypsin using the area-% method. Time of integration is 25 min. The blank should be considered for integration. Peaks that elute as a fronting shoulder of α-trypsin are integrated by perpendicular dropping if and only if a minimum is formed. Peaks that elute as a tailing shoulder of β-trypsin are evaluated by tangential integration if and only if a minimum is formed.

Acceptance criteria: NLT 70% for the peak area of β-trypsin and NMT 20% for the peak area of α-trypsin

SPECIFIC TESTS

• Protein Content

4 N hydrochloric acid solution: Mix 10.4 mL of 25% hydrochloric acid with 9.6 mL of water.

Storage buffer: Dissolve 2.9 g of calcium chloride dihydrate in water, add 2.5 mL of *4 N hydrochloric acid solution*, and dilute with water to a final volume of 1000 mL. Adjust with *4 N hydrochloric acid solution* to a pH of 2.0 ± 0.2, if necessary.

Sample solutions: Add 0.025 mL of recombinant trypsin to 3 mL of *Storage buffer*. Prepare at least in triplicate.

Blank solution: *Storage buffer*, 3 mL

Instrumental conditions

(See *Spectrophotometry and Light-Scattering* ⟨851⟩.)

Mode: UV

Analytical wavelength: 280 nm

Pathlength: 1 cm

System suitability

Sample: *Sample solutions*

Suitability requirement: ΔA (as defined below) is in the range of 0.13–1.8.

Analysis

Samples: *Sample solutions* and *Blank solution*

Calculate the protein concentration in mg/mL:

$$\text{Result} = \left[\frac{(\Delta A \times F)}{A_{280}\,\frac{1\%}{1\text{cm}}}\right] \times D$$

$$\Delta A = A_U - A_B$$

A_U = absorbance from the *Sample solution*

A_B = absorbance from the *Blank solution*

F = conversion factor from 1% to mg/mL, 10

$A_{280}\frac{1\%}{1\text{cm}}$ = extinction coefficient for trypsin, 13.6

D = dilution factor

• **Microbial Enumeration Tests ⟨61⟩:** The total bacterial count does not exceed 100 cfu/mL, the test being performed on 1 mL of recombinant trypsin in duplicate.

ADDITIONAL REQUIREMENTS

• **Packaging and Storage:** Store in closed containers at −15° to −25°.

• **Labeling:** The labeling states that the material is of recombinant DNA origin, along with the product number and lot number, storage conditions, and expiration date.

• **USP Reference Standards ⟨11⟩**

USP Trypsin Recombinant Porcine RS

Add the following:

▲⟨89.1⟩ COLLAGENASE I

```
IANTNSEKYD FEYLNGLSYT ELTNLIKNIK WNQINGLFNY STGSQKFFGD
KNRVQAIINA LQESGRTYTA NDMKGIETFT EVLRAGFYLG YYNDGLSYLN
DRNFQDKCIP AMIAIQKNPN FKLGTAVQDE VITSLGKLIG NASANAEVVN
NCVPVLKQFR ENLNQYAPDY VKGTAVNELI KGIEFDFSGA AYEKDVKTMP
WYGKIDPFIN ELKALGLYGN ITSATEWASD VGIYYLSKFG LYSTNRNDIV
QSLEKAVDMY KYGKIAFVAM ERITWDYDGI GSNGKKVDHD KFLDDAEKHY
LPKTYTFDNG TFIIRAGDKV SEEKIKRLYW ASREVKSQFH RVVGNDKALE
VGNADDVLTM KIFNSPEEYK FNTNINGVST DNGGLYIEPR GTFYTYERTP
QQSIFSLEEL FRHEYTHYLQ ARYLVDGLWG QGPFYEKNRL TWFDEGTAEF
FAGSTRTSGV LPRKSILGYL AKDKVDHRYS LKKTLNSGYD DSDWMFYNYG
FAVAHYLYEK DMPTFIKMNK AILNTDVKSY DEIIKKLSDD ANKNTEYQNH
IQELADKYQG AGIPLVSDDY LKDHGYKKAS EVYSEISKAA SLTNTSVTAE
KSQYFNTFTL RGTYTGETSK GEFKDWDEMS KKLDGTLESL AKNSWSGYKT
LTAYFTNYRV TSDNKVQYDV VFHGVLTDNA DISNNKAPIA KVTGPSTGAV
GRNIEFSGKD SKDEDGKIVS YDWDFGDGAT SRGKNSVHAY KKAGTYNVTL
KVTDDKGATA TESFTIEIKN EDTTTPITKE MEPNDDIKEA NGPIVEGVTV
KGDLNGSDDA DTFYFDVKED GDVTIELPYS GSSNFTWLVY KEGDDQNHIA
SGIDKNNSKV GTFKSTKGRH YVFIYKHDSA SNISYSLNIK GLGNEKLKEK
ENNDSSDKAT VIPNFNTTMQ GSLLGDDSRD YYSFEVKEEG EVNIELDKKD
EFGVTWTLHP ESNINDRITY GQVDGNKVSN KVKLRPGKYY LLVYKYSGSG
NYELRVNK
```

$C_{5099}H_{7771}N_{1329}O_{1610}S_{14}$

113,897 daltons (for β subtype)

[9001-12-1].

DEFINITION

Collagenase I (EC 3.4.24.3), isolated from *Clostridium histolyticum* and encoded by *colG* gene (GenBank accession number BAA77453.1), is a key raw material used in the dissociation or destruction of a broad range of tissue types. Collagenase I is a metalloprotease that acts as an endoprotease and also exhibits a tripeptidylcarboxypeptidase activity. It shows endopeptidic

activity with the main cleavage site found in front of the human collagen duplex amino acids glycine–proline. Hydrolysis takes place near the ends of the triple helical domains of collagen.

Collagenase I is also known as class I collagenase and consists of three subtypes: α, β, and γ. Collagenase I β is the full-length enzyme while collagenase I α (68,000 Da) and collagenase I γ (79,000 Da) are thought to be proteolytic degradation products of collagenase I β caused by other proteases present in *C. histolyticum* (mainly a trypsin-like enzyme and clostripain/endoproteinase Arg C).

Collagenase I can be provided in a liquid formulation consisting of 5 mM *N*-2-hydroxyethylpiperazine-*N'*-2-ethanesulfonic acid (HEPES) and 1 mM calcium chloride pH 7.5, and stored as a frozen liquid. The specific activity of collagenase I is 0.10–0.60 units/mg of protein using 4-phenylazobenzyloxycarbonyl (PZ)-Pro-Leu-Gly-Pro-D-Arg as the substrate described in the *Assay*. The peak area for collagenase I is NLT 90% as determined by HPLC described in the test for *Purity*. The test for *Clostripain Activity* is used to assess the activity of the clostripain impurity and the acceptance criterion is NMT 0.5 units/mg of protein. The test for *Trypsin Activity* is used to assess the activity of the trypsin-like enzyme impurity and the acceptance criterion is NMT 0.5 units/mg of protein.

IDENTIFICATION

- **A.** It meets the requirements in the *Assay*.
- **B.** The retention time of the major peak of the *Sample solution* corresponds to that of the *Standard solution*, as obtained in the test for *Purity*.

ASSAY

- **PROCEDURE**

Tris buffer: 0.1 M Tris pH 7.1, prepared as follows. Dissolve 6.05 g of tris(hydroxymethyl)aminomethane (Tris) in 400 mL of water, and adjust with 2 N hydrochloric acid to a pH of 7.1 (at 25 ± 1°). Dilute with water to a final volume of 500 mL.

Substrate solution: Dissolve 10 mg of PZ-Pro-Leu-Gly-Pro-D-Arg in 0.2 mL of methanol, and dilute this solution with *Tris buffer* to a final volume of 10 mL. [NOTE—Use a freshly prepared solution only.]

Calcium chloride solution: 0.1 M, prepared as follows. Weigh 1.47 g of calcium chloride dihydrate in a volumetric flask, and dilute with water to a final volume of 100 mL.

Citric acid solution: 0.025 M, prepared as follows. Weigh 525 mg of citric acid monohydrate in a volumetric flask, and dilute with water to a final volume of 100 mL.

Extraction mixture: To one test tube per sample to be assayed, pipette 5.0 mL of ethyl acetate and 1.0 mL of *Citric acid solution*. [NOTE—Use a freshly prepared mixture only.]

Drying tube: Into one test tube per sample to be assayed, add 0.35–0.40 g of sodium sulfate anhydrous. Seal the test tube with parafilm.

Standard solution: Dilute USP Collagenase I RS with *Tris buffer* in the range of 1:50 to 1:100 (v/v). [NOTE—Avoid freezing and thawing USP Collagenase I RS. After withdrawing USP Collagenase I RS, wipe off the outside of the plastic pipette tips to remove any residual solution.]

Sample solutions: Dilute collagenase I with *Tris buffer* to an appropriate dilution to achieve the absorbance range of 0.3–0.9 from the *Analysis*. Prepare in triplicate. [NOTE—Avoid freezing and thawing the collagenase I sample. After withdrawing the collagenase I sample, wipe off the outside of the tip to remove any residual solution.]

Instrumental conditions

(See *Ultraviolet-Visible Spectroscopy* ⟨857⟩.)

Mode: UV

Analytical wavelength: 320 nm

Path length: 1 cm

Temperature: 25°

Analysis

Samples: *Standard solution* and *Sample solutions*

Transfer 1.0 mL of *Substrate solution* and 0.2 mL of *Calcium chloride solution* into a test tube, and equilibrate the test tube to 25°. Start the reaction by adding 0.05 mL of *Standard solution* or each *Sample solution*. Prepare a blank by replacing the *Standard solution* or *Sample solution* with 0.05 mL of *Tris buffer*. Mix and incubate for exactly 15 min at 25°. Transfer 0.5 mL of the reaction to the test tube containing 6.0 mL of *Extraction mixture*. Vortex immediately for 20 s. Transfer 3 mL of the ethyl acetate phase (upper layer) into a *Drying tube* using a glass pipette, and vortex thoroughly. Transfer the supernatant to a disposable, semi-micro cuvette suitable for UV absorbance with a Pasteur pipette. Record the absorbance.

Calculate the activity of collagenase I in units/mL:

$$\text{Result} = (A - A_B) \times [V_T \times V_E/(\varepsilon \times V \times V_R \times B \times T)] \times D$$

A = absorbance of the *Standard solution* or *Sample solution*
A_B = absorbance of the blank
V_T = volume of the reaction mixture, 1.25 mL
V_E = volume of ethyl acetate in the *Extraction mixture*, 5.0 mL
ε = extinction coefficient for 320 nm, 21 (1 $cm^2 \cdot \mu mol^{-1}$)

V = volume of the *Standard solution* or *Sample solution*, 0.05 mL
V_R = volume of the reaction transferred to *Extraction mixture*, 0.5 mL
B = absorption path length, 1 cm
T = incubation time, 15 min
D = dilution factor

[NOTE—One unit will release the equivalent of 1 µmol of PZ-Pro-Leu from PZ-Pro-Leu-Gly-Pro-D-Arg per minute under the conditions of the *Assay*.]

Calculate the specific activity of collagenase I in units/mg of protein:

$$\text{Result} = Activity/C$$

Activity = activity of collagenase I (units/mL)
C = protein concentration (mg/mL)

System suitability

Samples: *Standard solution* and *Sample solutions*

Suitability requirements

Average calculated activity: 85%–115% of the value on the label, *Standard solution*

Absorbance: 0.3–0.9, *Standard solution* and *Sample solutions*

Acceptance criteria: 0.10–0.60 units/mg of protein

PURITY

• **PROCEDURE**

Solution A: 20 mM Tris and 1 mM calcium chloride pH 7.5, prepared as follows. Dissolve 2.42 g of Tris and 147 mg of calcium chloride dihydrate in 900 mL of water. Adjust with 2 N hydrochloric acid to a pH of 7.5. Dilute with water to a final volume of 1000 mL.

Solution B: 20 mM Tris, 1 mM calcium chloride, and 1 M sodium chloride pH 7.5, prepared as follows. Dissolve 2.42 g of Tris, 147 mg of calcium chloride dihydrate, and 58.44 g of sodium chloride in 900 mL of water. Adjust with 2 N hydrochloric acid to a pH of 7.5. Dilute with water to a final volume of 1000 mL.

Mobile phase: See *Table 1*.

Table 1

Time (min)	Solution A (%)	Solution B (%)
0	100	0
2	100	0
22	85	15
32	0	100
34	100	0
40	100	0

Storage buffer: 5 mM HEPES and 1 mM calcium chloride pH 7.5, prepared as follows. Dissolve 1.19 g of HEPES and 147 mg of calcium chloride dihydrate in 900 mL of water. Adjust with 4 N sodium hydroxide solution to a pH of 7.5. Dilute with water to a final volume of 1000 mL.

Standard solution: Thaw USP Collagenase I RS at room temperature shortly before use and mix. Store on ice or at 5°. Dilute with *Storage buffer* to achieve a protein concentration of 5.5 mg/mL. Transfer to an HPLC vial and keep at 5°. Prepare in duplicate, and inject each duplicate once.

Collagenase II solution: Thaw USP Collagenase II RS at room temperature shortly before use and mix. Store on ice or at 5°. Dilute with *Storage buffer* to achieve a protein concentration of 5.5 mg/mL. Transfer to an HPLC vial and keep at 5°. Prepare in duplicate, and inject each duplicate once.

Sample solution: Dilute collagenase I with *Storage buffer* to achieve a protein concentration of 5.5 mg/mL and keep at 5°.

Blank: *Storage buffer*

Chromatographic system

(See *Chromatography* ⟨621⟩, *System Suitability*.)

Mode: LC

Detector: UV 280 nm

Column: 5-mm × 5-cm; 10-µm packing L91

Temperatures

Column: 25°

Autosampler: 5°

Flow rate: 1.5 mL/min

Injection volume: 20 µL

System suitability

Sample: *Standard solution*

Suitability requirement: The chromatogram from the *Standard solution* corresponds to the typical chromatogram provided with USP Collagenase I RS.

Analysis

Sample: *Sample solution*

The *Blank* should be considered for integration. Identify the peak corresponding to collagenase II by comparing its retention time to the main peak from the *Collagenase II solution.* Evaluate the purity of collagenase I using the area–% method but excluding peaks associated with the *Blank*. All shoulders in the fronting and tailing of the main peak are integrated by dropping a perpendicular line at the inflection points and considered as separate impurities. Disregard any peaks having retention times greater than 25 min.

Acceptance criteria: NLT 90% for the main peak of collagenase I and NMT 3% of collagenase II

IMPURITIES

• Clostripain Activity

Potassium phosphate buffer: 0.1 M pH 7.6, prepared as follows. Dissolve 1.36 g of monobasic potassium phosphate in water, and dilute to 100 mL. Dissolve 2.28 g of dibasic potassium phosphate trihydrate in water, and dilute to 100 mL. Adjust the pH of the second solution to 7.6 with the first solution.

Dithiothreitol solution: 0.194 M, prepared as follows. Dissolve 60 mg of dithiothreitol (DTT) in 2 mL of *Potassium phosphate buffer.*

Calcium chloride solution: 0.01 M, prepared as follows. Dissolve 147 mg of calcium chloride dihydrate in 100 mL of water.

Substrate stock solution: 38 mM, prepared as follows. Dissolve 13 mg of benzoyl-L-arginine ethyl ester hydrochloride (BAEE · HCl) in 1 mL of *Potassium phosphate buffer.*

Substrate solution: 0.73 mM BAEE · HCl, 7.8 mM DTT, and 0.4 mM calcium chloride, prepared as follows. Transfer 0.5 mL of *Substrate stock solution,* 1.0 mL of *Dithiothreitol solution,* and 1.0 mL of *Calcium chloride solution* to a 25-mL volumetric flask, and dilute with *Potassium phosphate buffer* to volume.

Sample solution: Prepare in such a way that ΔA/min lies in the 0.02–0.06 range. Dilute with ice-cold *Potassium phosphate buffer* if necessary.

Instrumental conditions

(See *Ultraviolet-Visible Spectroscopy* ⟨857⟩.)

Mode: UV

Analytical wavelength: 255 nm

Path length: 1 cm

Temperature: 25°

Analysis

Sample: *Sample solution*

Transfer 3.0 mL of *Substrate solution* into a cuvette, and equilibrate the cuvette to 25°. Start the reaction by adding 0.05 mL of *Sample solution.* Prepare a blank by replacing the *Sample solution* with 0.05 mL of *Potassium phosphate buffer.* Mix well. Determine the change in absorbance (ΔA/min) from the linear range of the reaction. Assay the *Sample solution* in triplicate.

System suitability

Sample: *Sample solution*

Suitability requirement: 0.02–0.06 for ΔA/min

Calculate the activity of clostripain in units/mL in the portion of collagenase I taken:

$$\text{Result} = [V_T/(\varepsilon \times V_U \times B)] \times \Delta A/\text{min} \times D$$

V_T = volume of the reaction mixture, 3.05 mL
ε = extinction coefficient for 255 nm, 0.81 (1 $cm^2 \cdot mmol^{-1}$)
V_U = volume of the *Sample solution,* 0.05 mL
B = absorption path length, 1 cm
ΔA/min = change in absorbance from the linear range of the reaction
D = dilution factor

Calculate the specific activity in units/mg of protein:

$$\text{Result} = Activity/C$$

Activity = activity of clostripain (units/mL)
C = protein concentration (mg/mL)

Acceptance criteria: NMT 0.5 units of clostripain activity per mg of protein

• **Trypsin Activity**

Buffer: 0.1 M Tris and 0.02 M calcium chloride pH 8.0, prepared as follows. Dissolve 6.05 g of Tris and 1.45 g of calcium chloride dihydrate in 400 mL of water. Adjust with 2 N hydrochloric acid to a pH of 8.0 (at 25 ± 1°). Dilute with water to a final volume of 500 mL.

Substrate stock solution: Dissolve 10 mg of carbobenzoxy-valyl-glycyl-arginine-4-nitril-anilide acetate,[1] accurately weighed, in 1.5 mL of water. Store on ice. [Note—Use freshly prepared solution only.]

Substrate solution: Prepare a solution by mixing 9.2 mL of *Buffer* and 1.0 mL of *Substrate stock solution*. Store on ice. [Note—Use freshly prepared solution only.]

Sample solution: Undiluted collagenase I solution

Instrumental conditions

(See *Ultraviolet-Visible Spectroscopy* 〈857〉.)

Mode: Vis

Analytical wavelength: 405 nm

Path length: 1 cm

Temperature: 25°

Analysis

Sample: *Sample solution*

Transfer 1.02 mL of *Substrate solution* into a polystyrene, semi-micro cuvette, allow the temperature to stabilize, equilibrate the cuvette to 25°, and wait for 10 min. Start the reaction by adding 0.10 mL of *Sample solution*. Start recording the absorbance and continue for at least 5 min after the addition of the *Sample solution*. Determine the change in absorbance (ΔA/min) from the linear range of the reaction. Assay the *Sample solution* in triplicate. [Note—Use polyethylene pipette tips to transfer the *Sample solution*. The pipette tip should not be wet before transfer, and each pipette tip should be used only for transferring one sample. After withdrawing the *Sample solution*, wipe off the outside of the tip to remove any residual solution. After adding the *Sample solution* to the *Substrate solution*, rinse the tip by pipetting the solution up and down 2–3 times, discard the tip, and mix.]

System suitability

Sample: *Sample solution*

Suitability requirement: >0.01 for ΔA/min

Calculate the activity of trypsin in units/mL in the portion of collagenase I taken:

$$\text{Result} = [V_T/(\varepsilon \times V_U \times B)] \times \Delta A/\text{min} \times D$$

V_T	= volume of the reaction mixture, 1.12 mL
ε	= extinction coefficient for 405 nm, 10.4 (1 cm² · mmol⁻¹)
V_U	= volume of the *Sample solution*, 0.10 mL
B	= absorption path length, 1 cm
ΔA/min	= change in absorbance from the linear range of the reaction
D	= dilution factor

Calculate the specific activity in units/mg of protein:

$$\text{Result} = \mathit{Activity}/C$$

Activity	= activity of trypsin (units/mL)
C	= protein concentration (mg/mL)

Acceptance criteria: NMT 0.5 units of trypsin activity per mg of protein

SPECIFIC TESTS

• **Protein Content**

Sample solutions: Dilute collagenase I in water. Prepare at least in triplicate. [Note—Prepare the dilution using plastic pipette tips and not glass pipettes. Carefully wipe off the outside of the tip to remove any residual solution.]

Blank solution: Water

Instrumental conditions

(See *Ultraviolet-Visible Spectroscopy* 〈857〉.)

Mode: UV

Analytical wavelength: 280 nm

Path length: 1 cm

System suitability

Samples: *Sample solutions*

Suitability requirement: Absorbance is in the range of 0.10–1.00.

---

[1] A suitable carbobenzoxy-valyl-glycyl-arginine-4-nitril-anilide acetate is Chromozym TRY from Roche Applied Science (catalog number 10378496103) or equivalent.

Analysis

Samples: *Sample solutions* and *Blank solution*

Determine the net absorbance of *Sample solutions* by subtracting the absorbance of the *Blank solution* from the absorbance of each *Sample solution.* Determine the average net absorbance of *Sample solutions.*

Calculate the protein concentration in mg/mL:

$$\text{Result} = A_U \times D/\varepsilon$$

A_U = average net absorbance of the *Sample solutions*
D = dilution factor
ε = extinction coefficient (A_{280}0.1%/cm) for collagenase, 1.4

- **Bacterial Endotoxins Test ⟨85⟩:** NMT 50 USP Endotoxin Units/mg of protein
- **Microbial Enumeration Tests ⟨61⟩:** The total bacterial count is NMT 100 cfu/mL.

ADDITIONAL REQUIREMENTS

- **Packaging and Storage:** Store in closed containers at −15° to −25°.
- **Labeling:** The labeling states that the material is derived from *Clostridium histolyticum* along with the lot number, product or catalog number, and storage conditions.
- **USP Reference Standards ⟨11⟩**
  USP Collagenase I RS
  USP Collagenase II RS
  USP Endotoxin RS

▲USP40

Add the following:

▲⟨89.2⟩ COLLAGENASE II

VQNESKRYTV SYLKTLNYYD LVDLLVKTEI ENLPDLFQYS SDAKEFYGNK
TRMSFIMDEI GRRAPQYTEI DHKGIPTLVE VVRAGFYLGF HNKELNEINK
RSFKERVIPS ILAIQKNPNF KLGTEVQDKI VSATGLLAGN ETAPPEVVNN
FTPILQDCIK NIDRYALDDL KSKALFNVLA APTYDITEYL RATKEKPENT
PWYGKIDGFI NELKKLALYG KINDNNSWII DNGIYHIAPL GKLHSNNKIG
IETLTEVMKV YPYLSMQHLQ SADQIKRHYD SKDAEGNKIP LDKFKKEGKE
KYCPKTYTFD DGKVIIKAGA RVEEEKVKRL YWASKEVNSQ FFRVYGIDKP
LEEGNPDDIL TMVIYNSPEE YKLNSVLYGY DTNNGGMYIE PEGTFFTYER
EAQESTYTLE ELFRHEYTHY LQGRYAVPGQ WGRTKLYDND RLTWYEEGGA
ELFAGSTRTS GILPRKSIVS NIHNTTRNNR YKLSDTVHSK YGASFEFYNY
ACMFMDYMYN KDMGILNKLN DLAKNNDVDG YDNYIRDLSS NYALNDKYQD
HMQERIDNYE NLTVPFVADD YLVRHAYKNP NEIYSEISEV AKLKDAKSEV
KKSQYFSTFT LRGSYTGGAS KGKLEDQKAM NKFIDDSLKK LDTYSWSGYK
TLTAYFTNYK VDSSNRVTYD VVFHGYLPNE GDSKNSLPYG KINGTYKGTE
KEKIKFSSEG SFDPDGKIVS YEWDFGDGNK SNEENPEHSY DKVGTYTVKL
KVTDDKGESS VSTTTAEIKD LSENKLPVIY MNVPKSGALN QKVVFYGKGT
YDPDGSIAGY QWDFGDGSDF SSEQNPSHVY TKKGEYTVTL RVMDSSGQMS
EKTMKIKITD PVYPIGTEKE PNNSKETASG PIVPGIPVSG TIENTSDQDY
FYFDVITPGE VKIDINKLGY GGATWVVYDE NNNAVSYATD DGQNLSGKFK
ADKPGRYYIH LYMFNGSYMP YRINIEGSVG R

$C_{5028}H_{7666}N_{1300}O_{1564}S_{21}$
112,023 (for ζ subtype)
[9001-12-1].

DEFINITION

Collagenase II (EC 3.4.24.3), isolated from *Clostridium histolyticum* and encoded by *colH* gene (GenBank accession number BAA06251.1), is a key raw material used in the dissociation or destruction of a broad range of tissue types. Collagenase II is a metalloprotease that acts as an endoprotease and also exhibits a tripeptidylcarboxypeptidase activity. It shows endopeptidic activity with the main cleavage site found in front of the human collagen duplex amino acids glycine–proline. Hydrolysis takes place in the interior of the triple helical domains of collagen.

Collagenase II is also known as class II collagenase and consists of three subtypes: δ, ε, and ζ. Collagenase II ζ is the full-length enzyme while collagenase II δ (100,000 Da) and collagenase II ε (110,000 Da) are thought to be proteolytic degradation products of collagenase II ζ caused by other proteases present in *C. histolyticum* (mainly a trypsin-like enzyme and clostripain/endoproteinase Arg C).

Collagenase II can be provided in a liquid formulation consisting of 5 mM *N*-2-hydroxyethylpiperazine-*N'*-2-ethanesulfonic acid (HEPES) and 1 mM calcium chloride pH 7.5, and stored as a frozen liquid. The specific activity of collagenase II is 10–16 units/mg of protein using 4-phenylazobenzyloxycarbonyl (PZ)-Pro-Leu-Gly-Pro-D-Arg as the substrate described in the *Assay*. The peak area for collagenase II is NLT 90% as determined by HPLC described in the test for *Purity*. The test for *Clostripain Activity* is used to assess the activity of the clostripain impurity and the acceptance criterion is NMT 0.5 units/mg of protein.

The test for *Trypsin Activity* is used to assess the activity of the trypsin-like enzyme impurity and the acceptance criterion is NMT 0.5 units/mg of protein.

IDENTIFICATION

- **A.** It meets the requirements in the *Assay*.
- **B.** The retention time of the major peak of the *Sample solution* corresponds to that of the *Standard solution*, as obtained in the test for *Purity*.

ASSAY

- **PROCEDURE**

Tris buffer: 0.1 M Tris pH 7.1, prepared as follows. Dissolve 6.05 g of tris(hydroxymethyl)aminomethane (Tris) in 400 mL of water, and adjust with 2 N hydrochloric acid to a pH of 7.1 (at 25 ± 1°). Dilute with water to a final volume of 500 mL.

Substrate solution: Dissolve 10 mg of PZ-Pro-Leu-Gly-Pro-D-Arg in 0.2 mL of methanol, and dilute this solution with *Tris buffer* to a final volume of 10 mL. [NOTE—Use a freshly prepared solution only.]

Calcium chloride solution: 0.1 M, prepared as follows. Weigh 1.47 g of calcium chloride dihydrate in a volumetric flask, and dilute with water to a final volume of 100 mL.

Citric acid solution: 0.025 M, prepared as follows. Weigh 525 mg of citric acid monohydrate in a volumetric flask, and dilute with water to a final volume of 100 mL.

Extraction mixture: To one test tube per sample to be assayed, pipette 5.0 mL of ethyl acetate and 1.0 mL of *Citric acid solution*. [NOTE—Use a freshly prepared mixture only.]

Drying tube: Into one test tube per sample to be assayed, add 0.35–0.40 g of sodium sulfate anhydrous. Seal the test tube with parafilm.

Standard solution: Dilute USP Collagenase II RS with *Tris buffer* in the range of 1:2000 to 1:4000 (v/v). [NOTE—Avoid freezing and thawing USP Collagenase II RS. After withdrawing USP Collagenase II RS, wipe off the outside of the plastic pipette tips to remove any residual solution.]

Sample solutions: Dilute collagenase II with *Tris buffer* to an appropriate dilution to achieve the absorbance range of 0.3–0.9 from the *Analysis*. Prepare in triplicate. [NOTE—Avoid freezing and thawing the collagenase II sample. After withdrawing the collagenase II sample, wipe off the outside of the tip to remove any residual solution.]

Instrumental conditions

(See *Ultraviolet-Visible Spectroscopy* ⟨857⟩.)

Mode: UV

Analytical wavelength: 320 nm

Path length: 1 cm

Temperature: 25°

Analysis

Samples: *Standard solution* and *Sample solutions*

Transfer 1.0 mL of *Substrate solution* and 0.2 mL of *Calcium chloride solution* into a test tube, and equilibrate the test tube to 25°. Start the reaction by adding 0.05 mL of *Standard solution* or each *Sample solution*. Prepare a blank by replacing the *Standard solution* or *Sample solution* with 0.05 mL of *Tris buffer*. Mix and incubate for exactly 15 min at 25°. Transfer 0.5 mL of the reaction to the test tube containing 6.0 mL of *Extraction mixture*. Vortex immediately for 20 s. Transfer 3 mL of the ethyl acetate phase (upper layer) into a *Drying tube* using a glass pipette, and vortex thoroughly. Transfer the supernatant to a disposable, semi-micro cuvette suitable for UV absorbance with a Pasteur pipette. Record the absorbance.

Calculate the activity of collagenase II in units/mL:

$$\text{Result} = (A - A_B) \times [V_T \times V_E/(\varepsilon \times V \times V_R \times B \times T)] \times D$$

A = absorbance of the *Standard solution* or *Sample solution*
A_B = absorbance of the blank
V_T = volume of the reaction mixture, 1.25 mL
V_E = volume of ethyl acetate in the *Extraction mixture*, 5.0 mL
ε = extinction coefficient for 320 nm, 21 (1 cm² · µmol⁻¹)
V = volume of the *Standard solution* or *Sample solution*, 0.05 mL
V_R = volume of the reaction transferred to *Extraction mixture*, 0.5 mL
B = absorption path length, 1 cm
T = incubation time, 15 min
D = dilution factor

[NOTE—One unit will release the equivalent of 1 µmol of PZ-Pro-Leu from PZ-Pro-Leu-Gly-Pro-D-Arg per minute under the conditions of the *Assay*.]

Calculate the specific activity of collagenase II in units/mg of protein:

$$\text{Result} = Activity/C$$

Activity = activity of collagenase II (units/mL)

C = protein concentration (mg/mL)

System suitability

Samples: *Standard solution* and *Sample solutions*

Suitability requirements

Average calculated activity: 85%–115% of the value on the label, *Standard solution*

Absorbance: 0.3–0.9, *Standard solution* and *Sample solutions*

Acceptance criteria: 10–16 units/mg of protein

PURITY

• **Procedure**

Solution A: 20 mM Tris and 1 mM calcium chloride pH 7.5, prepared as follows. Dissolve 2.42 g of Tris and 147 mg of calcium chloride dihydrate in 900 mL of water. Adjust with 2 N hydrochloric acid to a pH of 7.5. Dilute with water to a final volume of 1000 mL.

Solution B: 20 mM Tris, 1 mM calcium chloride, and 1 M sodium chloride pH 7.5, prepared as follows. Dissolve 2.42 g of Tris, 147 mg of calcium chloride dihydrate, and 58.44 g of sodium chloride in 900 mL of water. Adjust with 2 N hydrochloric acid to a pH of 7.5. Dilute with water to a final volume of 1000 mL.

Mobile phase: See *Table 1*.

Table 1

Time (min)	Solution A (%)	Solution B (%)
0	100	0
2	100	0
22	85	15
32	0	100
34	100	0
40	100	0

Storage buffer: 5 mM HEPES and 1 mM calcium chloride pH 7.5, prepared as follows. Dissolve 1.19 g of HEPES and 147 mg of calcium chloride dihydrate in 900 mL of water. Adjust with 4 N sodium hydroxide solution to a pH of 7.5. Dilute with water to a final volume of 1000 mL.

Standard solution: Thaw USP Collagenase II RS at room temperature shortly before use and mix. Store on ice or at 5°. Dilute with *Storage buffer* to achieve a protein concentration of 5.5 mg/mL. Transfer to an HPLC vial and keep at 5°. Prepare in duplicate, and inject each duplicate once.

Sample solution: Dilute collagenase II with *Storage buffer* to achieve a protein concentration of 5.5 mg/mL and keep at 5°.

Blank: *Storage buffer*

Chromatographic system

(See *Chromatography* ⟨621⟩, *System Suitability*.)

Mode: LC

Detector: UV 280 nm

Column: 5-mm × 5-cm; 10-µm packing L91

Temperatures

Column: 25°

Autosampler: 5°

Flow rate: 1.5 mL/min

Injection volume: 20 µL

System suitability

Sample: *Standard solution*

Suitability requirement: The chromatogram from the *Standard solution* corresponds to the typical chromatogram provided with USP Collagenase II RS.

Analysis

Sample: *Sample solution*

The *Blank* should be considered for integration. Evaluate the purity of collagenase II using the area–% method but excluding peaks associated with the *Blank*. All shoulders in the fronting and tailing of the main peak are integrated by dropping a perpendicular line at the inflection points and considered as separate impurities. Disregard any peaks having retention times greater than 25 min.

Acceptance criteria: NLT 90% for the main peak of collagenase II

General Chapters

IMPURITIES

• **Clostripain Activity**

Potassium phosphate buffer: 0.1 M pH 7.6, prepared as follows. Dissolve 1.36 g of monobasic potassium phosphate in water, and dilute to 100 mL. Dissolve 2.28 g of dibasic potassium phosphate trihydrate in water, and dilute to 100 mL. Adjust the pH of the second solution to 7.6 with the first solution.

Dithiothreitol solution: 0.194 M, prepared as follows. Dissolve 60 mg of dithiothreitol (DTT) in 2 mL of *Potassium phosphate* buffer.

Calcium chloride solution: 0.01 M, prepared as follows. Dissolve 147 mg of calcium chloride dihydrate in 100 mL of water.

Substrate stock solution: 38 mM, prepared as follows. Dissolve 13 mg of benzoyl-L-arginine ethyl ester hydrochloride (BAEE · HCl) in 1 mL of *Potassium phosphate buffer.*

Substrate solution: 0.73 mM BAEE · HCl, 7.8 mM DTT, and 0.4 mM calcium chloride, prepared as follows. Transfer 0.5 mL of *Substrate stock solution,* 1.0 mL of *Dithiothreitol solution,* and 1.0 mL of *Calcium chloride solution* to a 25-mL volumetric flask, and dilute with *Potassium phosphate buffer* to volume.

Sample solution: Prepare in such a way that *ΔA*/min lies in the 0.02–0.06 range. Dilute with ice-cold *Potassium phosphate buffer* if necessary.

Instrumental conditions

(See *Ultraviolet-Visible Spectroscopy* 〈857〉.)

Mode: UV

Analytical wavelength: 255 nm

Path length: 1 cm

Temperature: 25°

Analysis

Sample: *Sample solution*

Transfer 3.0 mL of *Substrate solution* into a cuvette, and equilibrate the cuvette to 25°. Start the reaction by adding 0.05 mL of *Sample solution.* Prepare a blank by replacing the *Sample solution* with 0.05 mL of *Potassium phosphate buffer.* Mix well. Determine the change in absorbance (*ΔA*/min) from the linear range of the reaction. Assay the *Sample solution* in triplicate.

System suitability

Sample: *Sample solution*

Suitability requirement: 0.02–0.06 for *ΔA*/min

Calculate the activity of clostripain in units/mL in the portion of collagenase II taken:

$$\text{Result} = [V_T/(\varepsilon \times V_U \times B)] \times \Delta A/\text{min} \times D$$

V_T = volume of the reaction mixture, 3.05 mL
ε = extinction coefficient for 255 nm, 0.81 ($1\ cm^2 \cdot mmol^{-1}$)
V_U = volume of the *Sample solution,* 0.05 mL
B = absorption path length, 1 cm
ΔA/min = change in absorbance from the linear range of the reaction
D = dilution factor

Calculate the specific activity in units/mg of protein:

$$\text{Result} = Activity/C$$

Activity = activity of clostripain (units/mL)
C = protein concentration (mg/mL)

Acceptance criteria: NMT 0.5 units of clostripain activity per mg of protein

• **Trypsin Activity**

Buffer: 0.1 M Tris and 0.02 M calcium chloride pH 8.0, prepared as follows. Dissolve 6.05 g of Tris and 1.45 g of calcium chloride dihydrate in 400 mL of water. Adjust with 2 N hydrochloric acid to a pH of 8.0 (at 25 ± 1°). Dilute with water to a final volume of 500 mL.

Substrate stock solution: Dissolve 10 mg of carbobenzoxy-valyl-glycyl-arginine-4-nitril-anilide acetate,[1] accurately weighed, in 1.5 mL of water. Store on ice. [Note—Use freshly prepared solution only.]

Substrate solution: Prepare a solution by mixing 9.2 mL of *Buffer* and 1.0 mL of *Substrate stock solution.* Store on ice. [Note—Use freshly prepared solution only.]

Sample solution: Undiluted collagenase II solution

[1] A suitable carbobenzoxy-valyl-glycyl-arginine-4-nitril-anilide acetate is Chromozym TRY from Roche Applied Science (catalog number 10378496103) or equivalent.

Instrumental conditions

(See *Ultraviolet-Visible Spectroscopy* ⟨857⟩.)

Mode: Vis

Analytical wavelength: 405 nm

Path length: 1 cm

Temperature: 25°

Analysis

Sample: *Sample solution*

Transfer 1.02 mL of *Substrate solution* into a polystyrene semi-micro cuvette, allow the temperature to stabilize, equilibrate the cuvette to 25°, and wait for 10 min. Start the reaction by adding 0.10 mL of *Sample solution*. Start recording the absorbance and continue for at least 5 min after the addition of the *Sample solution*. Determine the change in absorbance (ΔA/min) from the linear range of the reaction. Assay the *Sample solution* in triplicate. [NOTE—Use polyethylene pipette tips to transfer the *Sample solution*. The pipette tip should not be wet before transfer, and each pipette tip should be used only for transferring one sample. After withdrawing the *Sample solution*, wipe off the outside of the tip to remove any residual solution. After adding the *Sample solution* to the *Substrate solution*, rinse the tip by pipetting the solution up and down 2–3 times, discard the tip, and mix.]

System suitability

Sample: *Sample solution*

Suitability requirement: >0.01 for ΔA/min

Calculate the activity of trypsin in units/mL in the portion of collagenase II taken:

$$\text{Result} = [V_T/(\varepsilon \times V_U \times B)] \times \Delta A/\text{min} \times D$$

V_T = volume of the reaction mixture, 1.12 mL

ε = extinction coefficient for 405 nm, 10.4 (1 cm² · mmol⁻¹)

V_U = volume of the *Sample solution*, 0.10 mL

B = absorption path length, 1 cm

ΔA/min = change in absorbance from the linear range of the reaction

D = dilution factor

Calculate the specific activity in units/mg of protein:

$$\text{Result} = Activity/C$$

Activity = activity of trypsin (units/mL)

C = protein concentration (mg/mL)

Acceptance criteria: NMT 0.5 units of trypsin activity per mg of protein

SPECIFIC TESTS

• **PROTEIN CONTENT**

Sample solutions: Dilute collagenase II in water. Prepare at least in triplicate. [NOTE—Prepare the dilution using plastic pipette tips and not glass pipettes. Carefully wipe off the outside of the tip to remove any residual solution.]

Blank solution: Water

Instrumental conditions

(See *Ultraviolet-Visible Spectroscopy* ⟨857⟩.)

Mode: UV

Analytical wavelength: 280 nm

Path length: 1 cm

System suitability

Samples: *Sample solutions*

Suitability requirement: Absorbance is in the range of 0.10–1.00.

Analysis

Samples: *Sample solutions* and *Blank solution*

Determine the net absorbance of *Sample solutions* by subtracting the absorbance of the *Blank solution* from the absorbance of each *Sample solution*. Determine the average net absorbance of *Sample solutions*.

Calculate the protein concentration in mg/mL:

$$\text{Result} = A_U \times D/\varepsilon$$

A_U = average net absorbance of the *Sample solutions*

D = dilution factor

ε = extinction coefficient (A_{280}0.1%/cm) for collagenase, 1.4

• **BACTERIAL ENDOTOXINS TEST** ⟨85⟩: NMT 50 USP Endotoxin Units/mg of protein

General Chapters

- **Microbial Enumeration Tests 〈61〉:** The total bacterial count is NMT 100 cfu/mL.

ADDITIONAL REQUIREMENTS

- **Packaging and Storage:** Store in closed containers at −60° to −90°.
- **Labeling:** The labeling states that the material is derived from *Clostridium histolyticum* along with the lot number, product or catalog number, and storage conditions.
- **USP Reference Standards 〈11〉**
  USP Collagenase II RS
  USP Endotoxin RS

▲USP40

〈90〉 FETAL BOVINE SERUM—QUALITY ATTRIBUTES AND FUNCTIONALITY TESTS

INTRODUCTION

Fetal bovine serum (FBS) is the light-brown liquid fraction of clotted fetal bovine blood. It is depleted of cells, fibrin, and clotting factors. Although the complete composition of FBS is undefined, FBS contains high levels of growth factors and low levels of immunoglobulins. In addition, it contains other key ingredients that are essential in supporting proliferation of cells in culture. This product is used both in life science basic research and industrial manufacturing. FBS is a by-product of the meat industry and is collected from bovine fetuses removed from cattle found to be pregnant at slaughter. FBS is harvested from abattoirs that are inspected by the competent authority in the country of origin. Trained personnel following written and approved procedures should perform collection and processing. Blood is collected in a closed system in a dedicated area within the facility, and processed quickly to prevent hemolysis. The blood is allowed to clot and then typically is centrifuged in a refrigerated centrifuge to separate the serum from the other components. Serum typically is removed from the clot, transferred to labeled containers, and frozen. All manufacturers employ sterile filtration before final packaging. Additionally, gamma irradiation provides the highest assurance of the absence of viral activity. Gamma irradiation doses of 25–40 kGy provide significant log reduction of viral and other adventitious agents while preserving cellular growth performance.

The screening of FBS for viral contamination is accomplished by using all applicable testing described in the Code of Federal Regulations 9 CFR 113.53 (known as full 9 CFR testing). Mycoplasma assays are performed as described in *Mycoplasma Tests* 〈63〉.

IDENTIFICATION

- **Identification—Radial Immunodiffusion**

Reagents

- FBS test samples
- Horse serum, negative control samples
- Bovine IgG calibrator (500 mg/L)
- Sheep albumin diluent (1% Sheep albumin, 0.18% EDTA, 1.75% NaCl, and 1.21% Tris/HCl pH 7.4).

Materials/Apparatus: Ring measuring device is calibrated in 0.1-mm increments. Radial immunodiffusion (RID) plates are commercially available and contain anti-bovine IgG antiserum in a 1.5% agarose gel, 0.1 M phosphate buffer, pH 7.0, 0.1% sodium azide as bacteriostatic agent, and 1 µg/mL amphotericin B as an antifungal agent. Store at 2°–8°. Use RID plates that can measure bovine IgG in the range of 50–500 mg/L.

Standard curve: Use the bovine IgG calibrators for system suitability and for generation of a calibration curve. Prepare two dilutions from a 500 mg/L bovine IgG stock solution. Dilute 120 µL of the 500 mg/L stock with 80 µL of diluent (medium dilution) and 25 µL of the 500 mg/L stock with 225 µL diluent (low dilution). Label each dilution respectively as 300 mg/L and 50 mg/L calibrators. Use the 500 mg/L, 300 mg/L, and 50 mg/L solutions to generate the standard curve. [Note—Prepare and analyse the calibrator bovine IgG solutions in duplicate.] Load 5 µL of each sample into the 2.5-mm wells of the plate. At 72 h of incubation, measure ring diameters to the nearest 0.1 mm using an appropriate ring measuring device. Record the results and proceed to the generation of a standard curve.

The ring diameter should develop to completion at room temperature for 72 h. Using the result from each data point of the standard curve, generate a single linearity plot where y is the squared diameter (mm^2) of precipitin ring around the well and x is the Bovine IgG concentration (mg/L). Calculate the linear least-squares-fit regression line of the form y = m(x) + b with the help of suitable software and determine the values for slope (m), y-intercept (b), and coefficient of determination (R^2). The standard curve for the method is linear if R^2 is ≥0.98.

Analysis: Frozen undiluted samples of FBS are thawed and tested within 24 h if stored at 4°. Testing of FBS test and USP Fetal Bovine Serum RS samples is performed in triplicate. Prepare RID plates containing anti-bovine IgG to be tested for the various types of sera. Allow plates and reagents to equilibrate to room temperature before use by leaving the plates open for 10–15 min at room temperature to allow any condensation in the wells or on the gel surface to evaporate. Samples should not be applied to wells where moisture is visible. Prepare serial dilutions, if necessary, of FBS test and USP Fetal Bo-

vine Serum RS samples in diluent. Dilute the negative control horse serum in diluent. Load 5 µL of each sample into the 2.5-mm wells of the plate, and incubate at room temperature for 72 h. [NOTE—The test samples and the negative control are loaded on the same plate.]

Calculation: After 72 h, measure the diameters of the rings using the ring measuring device, and record the results. Using the regression equation developed under standard curve deviation, calculate the concentration of bovine IgG in FBS samples. Concentration is expressed as mg/L.

Acceptance criteria: Horse serum is negative (should not give a precipitation ring). FBS test and USP Fetal Bovine Serum RS samples are positive and contain NMT 500 mg/L of IgG.

• **HEMOGLOBIN CONTENT**

(See *Ultraviolet-Visible Spectroscopy* ⟨857⟩.)

Sample preparation: FBS samples are thawed, are stored at 4°, and are tested within the same day.

Analysis: Determine the absorbance of the serum sample using a spectrophotometric cell of 1-cm path length at the wavelengths of absorbance at 576, 623, and 700 nm and using water as a blank. Calculate the concentration of hemoglobin in mg/dL:

$$(Abs_{576} \times 115) - (Abs_{623} \times 102) - (Abs_{700} \times 39.1)$$

Acceptance criteria: NMT 30 mg/dL

SPECIFIC TESTS

• **FBS FUNCTIONALITY TESTS**

In the absence of a user-defined functionality assay, the following tests are suitable to determine the functionality of specific lots of FBS and to aid in the optimization of the growth conditions of mammalian cell cultures in the presence of FBS. For valid functionality confirmation independent of user-specific applications, tests are performed on the specified cell lines. For in-house validation of specialized cell culture applications, cell line(s) specific to those applications should be used and characterized. Use appropriate tissue culture vessels. Two tests described in this chapter are the *Growth-Promotion Curve* and the *Clonal Assay*. The decision about which type of test or the number of tests to be performed to assess suitability of a specific lot of FBS depends on the type of cell line used. For adherent cell lines, the number of colonies at the end of the culturing period represents a good assessment of the capacity of these cells, at low concentration, to grow in the presence of a specific lot of FBS. For cell lines growing in suspension cultures, the optimum growth kinetics is measured by counting viable cells after 7 days of culture.

Cell lines: Five cell lines are recommended for use:

1. HFL1 (ATCC CCL-153) normal lung, fibroblast
2. Mv1 Lu (ATCC CCL-64) mink lung, epithelial
3. HL-60 (ATCC CCL-240) peripheral blood promyeloblast, suspension
4. VERO (ATCC CCL-81) monkey kidney fibroblast
5. CHO (CCL-61) Chinese hamster ovary

The functionality tests described are to be performed on three cell lines, two of which are drawn from the five recommended cell lines and the third of which is the cell line relevant to the user's application. Cell lines are cultured with specific media as recommended by ATCC.

Materials

- Suitable growth vessel/container
- Biological Safety Cabinet Class II, Type A
- Cell counter/hemacytometer
- Inverted microscope with digital camera accessory
- Tissue culture vessels: T25 cm²

Preparation of cells for assays: Quick-thaw a vial in a 37° water bath, and determine cell count and viability. Prepare multiple cultures from each cell line in serum-supplemented growth medium. Incubate the cultures at 37° following instructions provided by ATCC for each of the cell lines used for the test. Examine the prepared cultures under a microscope to ensure uniform, near-confluent monolayers or suspensions. Expand cells until there are enough for assay (about 1×10^7 total cells; >90% viability).

Harvesting of cultures

1. Remove and discard the growth medium, and then rinse each culture with media lacking FBS.
2. For adherent cells, add 1 mL of Trypsin/EDTA for a few minutes for cells to disperse. Incubate at 37°, if necessary. Neutralize with 1 mL culture medium containing at least 10% FBS.
3. Spin down the cells in a centrifuge. Aspirate off wash media, and resuspend cells in an appropriate volume for seeding.

Seeding of cells

1. On day 0: For the three cell lines to be tested prepare multiple cultures using seeding densities that range between 2×10^3 and 2×10^4 viable cells/mL. (Different inocula are chosen initially to determine optimum growth conditions. Once the appropriate inoculum is chosen, that condition is used to propagate the cells.) Following are the recommended seeding densities:

General Chapters

Low seeding density: 2×10^3 viable cells/mL
Mid seeding density: 6×10^3 viable cells/mL
High seeding density: 2×10^4 viable cells/mL

2. Prepare cultures in triplicate for at least five time points (in days or hours according to the cell line), to determine the seeding density that will yield the optimal growth conditions for each cell line used.
3. Incubate the cultures at 37° in a humidified incubator saturated with 5% CO_2.
4. For each time point of measurement (days 0, 1, 2, 3, 4, and 7), take a photograph of each culture, in triplicate, for both the FBS test material and the USP Fetal Bovine Serum RS at each of the three concentrations for each cell line, and record the percentage of confluency for each of the conditions. [NOTE—Perform this step before trypsinization and cell counting.]
5. Harvest the cells from the three different seeding density cultures for each specific time point. For adherent cultures, harvest cells as described above.
6. Perform and record total cell count and viability for each of the nine cultures for the FBS test and the USP Fetal Bovine Serum RS for each cell line using an appropriate cell counter or hemacytometer. [NOTES—The schedule for counting may have to be changed for fast-growing cell lines or large cells that would become confluent before day 7 and/or for slow-growing lines that need to be in culture 8–10 days before reaching a plateau. Some adherent cell lines will never reach confluency.]

- **GROWTH-PROMOTION CURVE**

Measurements of cell proliferation rates often are used to determine the response of cells to exogenous stimuli. Quantitative assessment of cell growth conditions is an important factor in monitoring consistency of culture conditions. The optimal cell concentration range for subculturing, optimum inoculum, and doubling time are parameters that can be quantified and trended. Information about the growth kinetics of a culture is critical in the design of cell-based experiments. Cultures vary significantly in their growth properties from lag phase, log phase, and stationary phase. Document the growth characteristics of the culture during the three growth stages to determine population doubling time and cell cycle time. Cells that have entered the stationary phase may demonstrate reduced growth potential and change in morphology. Cells may become polarized and may secrete more extracellular matrix, making them difficult to remove from the substratum. Cells at the end of the log phase give the highest yield and greatest reproducibility.

Reagents

- Growth media without FBS
- FBS test samples
- Growth medium + 10% FBS
- Trypsin/EDTA solution (0.25%/0.53 mM) in Hank's Balanced Salt Solution (HBSS)

Analysis: Once the cells have reached the end of the log phase, subculture the cells for the test. Follow the procedure described under *Seeding Cells* and prepare multiple cultures for the USP Fetal Bovine Serum RS, and test FBS for different cell lines at three seeding densities for which at least one growth curve displays a lag phase, log phase, and stationary phase and for which the log phase is linear at three or more time points.
Viable cell counts are determined on days 0, 1, 2, 3, 4, and 7.

Calculation and Data analysis: Calculate the mean viable count [cells/cm² (adherent) or cells/mL (suspension)] and the mean percent viability for each data point. Plot the data on a semi-log scale graph with the viable count on the log scale on the *y*-axis and days (or hours) in culture on an arithmetic scale on the *x*-axis. Estimate the doubling time using a growth curve that is linear over three or more time points.

Acceptance criteria: The R^2 value of the line should be equal to or greater than 0.98 in order to support calculation of a valid doubling time. The doubling time of the test sample should be no less than 90% of the doubling time of USP Fetal Bovine Serum RS.

- **CLONAL ASSAY**

This assay is designed to assess the optimal growth for adherent cell lines. Plating efficiency or colony formation at low cell density is a preferred method for analyzing the proliferative capacity and survival of single cells under optimal growth conditions. This is a very sensitive test and is often used for assessing the quality of serum lots. This technique reveals differences in the growth rate within the cell population and is capable of distinguishing between changes in growth rate (colony size) and cell survival (colony number). Because of the heterogeneous cell population of some cell cultures, remember that cells grow differently as isolated colonies at low densities. Consequently, few cells survive even under ideal conditions because all cell interaction is lost. Cloning is a survival assay that is also used for optimizing growth conditions (selection of medium and serum). If it can be confirmed that a single colony arose from a single cell, then cloning efficiency can be determined.

Reagents

- Growth medium + 10% FBS (test serum)—Eagle minimum essential medium (EMEM) with 2 mM L-glutamine and Earle's BSS adjusted to contain 1.5 g/L sodium carbonate, 0.1 mM nonessential amino acids, and sodium pyruvate containing 100 U/mL penicillin and 100 g/mL streptomycin plus 10% FBS.
- Trypsin/EDTA solution (0.25%/0.53 mM) in HBSS.
- Dulbecco's Phosphate Buffer Saline without calcium or magnesium.

- Carbol Fuchsin–Methylene Blue Solution—Mix 20 g carbol fuchsin stock in 2 L methanol and stir for 10 min (1% carbol fuchsin). Mix 50 g methylene blue in 5 L methanol, and stir for 10 min (1% methylene blue). Prepare Carbol Fuschin–Methylene Blue working solution by mixing methylene blue, methanol, and carbol fuchsin in a ratio of 3:2:1. Mix for 20 min and filter through four folds of cheesecloth in a funnel. Aliquot and store in brown glass bottles at 15° to 25°.

Sample: Multiple lots of FBS are used for this assay. For each lot of serum to be tested, add 20 mL of FBS to 180 mL of EMEM, and use the same sample for the entire test. Sterilize using 0.22-m low protein binding filter units. Store growth medium at 4° until ready to use.

Cell preparation: This test is only for adherent cultures and is performed with the adherent cell lines described under *Cell Lines* (HFL1 and Mv 1 Lu). One week before testing serum, expand the cell lines as described under *Seeding of Cells*, change the medium every 2–3 days, and subculture the cells when they are about 90% confluent. Determine the cell count and viability (viability should be >90%) before performing the assay. Harvest cells as described under *Harvesting of Cultures*, wash twice, and resuspend cells in basal EMEM.

Analysis: The procedure involves plating single-cell suspension at low densities (2–50 cells/cm²) from which discrete colonies will form. At the end of the assay, fix, stain, and count the number of colonies as directed below.

1. For each cell line label ten 60-mm × 15-mm tissue culture dishes for each serum lot that will be tested. Label the side of the lower half of each dish, including controls.
2. Transfer 5 mL of medium containing 10% of the appropriate test serum (10 replicates). Add 400 cells per culture dish (aim for a cell concentration of about 800 cells/mL).
3. Incubate for 10–14 days at 37° in a humidified incubator saturated with 5% CO².
4. Remove the supernatant and add enough Carbol Fuchsin–Methylene Blue Solution to cover each of the culture dishes for 10 min.
5. Remove the stain; rinse the culture dishes with several changes of distilled water; invert the dishes on paper towels; and allow to dry.
6. Count and record (1) the number of colonies and (2) the total surface of stained colonies (mm²). Calculate means and standard deviations.

Acceptance criteria: Percent plating efficiency is expressed by counting the number of colonies in a defined area divided by the number of cells seeded multiplied by 100. Compare results between lots of FBS, and select a serum lot that is good for various types of cells and optimal for a specific cell culture application.

- **pH ⟨791⟩:** 7.00–8.00, in undiluted serum samples
- **Osmolality and Osmolarity ⟨785⟩**, *Osmolality*: 280–360 mOsmol/kg
- **Bacterial Endotoxins Test ⟨85⟩:** It contains not more than 10 USP Endotoxin Units/mL of serum.
- **Total Protein Content ⟨1057⟩:** 30–45 mg/mL
- **Sterility Tests ⟨71⟩:** Meets the requirements

ADDITIONAL REQUIREMENTS

- **Packaging and Storage:** Store in sealed containers at a temperature of −10° or below.
- **Labeling:** Label it to indicate that contents are Fetal Bovine Serum, and indicate lot number, expiration date, and storage conditions. Also, indicate country of origin on product labeling.
- **USP Reference Standards ⟨11⟩**
  USP Endotoxin RS
  USP Fetal Bovine Serum RS

⟨91⟩ CALCIUM PANTOTHENATE ASSAY

ASSAY

- **Procedure**

Standard stock solution of calcium pantothenate: Dissolve 50 mg of USP Calcium Pantothenate RS, previously dried and stored in the dark over phosphorus pentoxide and accurately weighed while protected from absorption of moisture during the weighing, in about 500 mL of water in a 1000-mL volumetric flask. Add 10 mL of 0.2 N acetic acid and 100 mL of sodium acetate solution (1 in 60), then dilute with water to volume. Each mL represents 50 µg of USP Calcium Pantothenate RS. Store under toluene in a refrigerator.

Standard preparation: On the day of the assay, dilute a measured volume of *Standard stock solution of calcium pantothenate* with sufficient water so that it contains, in each mL, between 0.01 µg and 0.04 µg of calcium pantothenate, the exact concentration being such that the responses obtained as directed for *Procedure*, 2.0 and 4.0 mL of the *Standard preparation* being used, are within the linear portion of the log-concentration response curve.

Assay preparation: Proceed as directed in the individual monograph for preparing a solution expected to contain approximately the equivalent of the calcium pantothenate concentration in the *Standard preparation.*

Basal medium stock solution: Dissolve the anhydrous dextrose and sodium acetate in the solutions previously mixed, and adjust with 1 N sodium hydroxide to a pH of 6.8. Finally, dilute with water to 250 mL, and mix.

Acid-hydrolyzed casein solution	25 mL
Cystine–tryptophane solution	25 mL
Polysorbate 80 solution	0.25 mL
Dextrose, anhydrous	10 g
Sodium acetate, anhydrous	5 g
Adenine–guanine–uracil solution	5 mL
Riboflavin-thiamine hydrochloride-biotin solution	5 mL
Para-aminobenzoic acid–niacin–pyridoxine hydrochloride solution	5 mL
Salt solution A	5 mL
Salt solution B	5 mL

Acid-hydrolyzed casein solution: Mix 100 g of vitamin-free casein with 500 mL of 6 N hydrochloric acid, and reflux the mixture for 8 to 12 hours. Remove the hydrochloric acid from the mixture by distillation under reduced pressure until a thick paste remains. Redissolve the resulting paste in water, adjust the solution with 1 N sodium hydroxide to a pH of 3.5 ± 0.1, and add water to make 1000 mL. Add 20 g of activated charcoal, stir for 1 hour, and filter. Repeat the treatment with activated charcoal. Store under toluene in a refrigerator at a temperature not below 10°. Filter the solution if a precipitate forms during storage.

Cystine–tryptophane solution: Suspend 4.0 g of L-cystine and 1.0 g of L-tryptophane (or 2.0 g of D,L-tryptophane) in 700 to 800 mL of water, heat to 70° to 80°, and add dilute hydrochloric acid (1 in 2) dropwise, with stirring, until the solids are dissolved. Cool, and add water to make 1000 mL. Store under toluene in a refrigerator at a temperature not below 10°.

Adenine–guanine–uracil solution: Dissolve 200 mg each of adenine sulfate, guanine hydrochloride, and uracil, with the aid of heat, in 10 mL of 4 N hydrochloric acid, cool, and add water to make 200 mL. Store under toluene in a refrigerator.

Polysorbate 80 solution: Dissolve 25 g of polysorbate 80 in alcohol to make 250 mL.

Riboflavin–thiamine hydrochloride–biotin solution: Prepare a solution containing, in each mL, 20 µg of riboflavin, 10 µg of thiamine hydrochloride, and 0.04 µg of biotin, by dissolving riboflavin, thiamine hydrochloride, and biotin in 0.02 N acetic acid. Store, protected from light, under toluene in a refrigerator.

Para-aminobenzoic acid–niacin–pyridoxine hydrochloride solution: Prepare a solution in neutral 25 percent alcohol to contain 10 µg of para-aminobenzoic acid, 50 µg of niacin, and 40 µg of pyridoxine hydrochloride in each mL. Store in a refrigerator.

Salt solution A: Dissolve 25 g of monobasic potassium phosphate and 25 g of dibasic potassium phosphate in water to make 500 mL. Add 5 drops of hydrochloric acid, and store under toluene.

Salt solution B: Dissolve 10 g of magnesium sulfate, 0.5 g of sodium chloride, 0.5 g of ferrous sulfate, and 0.5 g of manganese sulfate in water to make 500 mL. Add 5 drops of hydrochloric acid, and store under toluene.

Stock culture of *Lactobacillus plantarum*: Dissolve 2.0 g of water-soluble yeast extract in 100 mL of water, add 500 mg of anhydrous dextrose, 500 mg of anhydrous sodium acetate, and 1.5 g of agar, and heat the mixture, with stirring, on a steam bath, until the agar dissolves. Add approximately 10-mL portions of the hot solution to test tubes, suitably close or cover the tubes, sterilize at 121°, and allow the tubes to cool in an upright position. Prepare stab cultures in 3 or more of the tubes, using a pure culture of *Lactobacillus plantarum*,* incubating for 16 to 24 hours at any selected temperature between 30° and 37° but held constant to within ± 0.5°, and finally store in a refrigerator. Prepare a fresh stab of the stock culture every week, and do not use for inoculum if the culture is more than 1 week old.

Culture medium: To each of a series of test tubes containing 5.0 mL of *Basal medium stock solution* add 5.0 mL of water containing 0.2 µg of calcium pantothenate. Plug the tubes with cotton, sterilize in an autoclave at 121°, and cool.

Inoculum: Make a transfer of cells from the stock culture of *Lactobacillus plantarum* to a sterile tube containing 10 mL of culture medium. Incubate this culture for 16 to 24 hours at any selected temperature between 30° and 37° but held constant to within ± 0.5°. The cell suspension so obtained is the inoculum.

Procedure: To similar test tubes add, in duplicate, 1.0 and/or 1.5, 2.0, 3.0, 4.0, and 5.0 mL, respectively, of the *Standard preparation*. To each tube and to 4 similar tubes containing no *Standard preparation* add 5.0 mL of *Basal medium stock solution* and sufficient water to make 10 mL.

To similar test tubes add, in duplicate, volumes of the *Assay preparation* corresponding to 3 or more of the levels listed above for the *Standard preparation*, including the levels of 2.0, 3.0, and 4.0 mL. To each tube add 5.0 mL of the *Basal medium stock solution* and sufficient water to make 10 mL. Place one complete set of Standard and Assay tubes together in one tube rack and the duplicate set in a second rack or section of a rack, preferably in random order.

Cover the tubes of both series suitably to prevent contamination, and heat in an autoclave at 121° for 5 minutes. Cool, add 1 drop of inoculum to each tube, except 2 of the 4 tubes containing no *Standard preparation* (to serve as the uninoculated blanks), and mix. Incubate the tubes at a temperature between 30° and 37°, held constant to within ± 0.5° until, fol-

* American Type Culture Collection No. 8014 is suitable. This strain formerly was known as *Lactobacillus arabinosus* 17-5.

lowing 16 to 24 hours of incubation, there has been no substantial increase in turbidity in the tubes containing the highest level of standard during a 2-hour period.

Determine the transmittance of the tubes in the following manner: Mix the contents of each tube, and transfer to an optical container if necessary. Place the container in a spectrophotometer that has been set at a specific wavelength between 540 nm and 660 nm, and read the transmittance when a steady state is reached. This steady state is observed a few seconds after agitation when the galvanometer reading remains constant for 30 seconds or more. Allow approximately the same time interval for the reading on each tube.

With the transmittance set at 1.00 for the uninoculated blank, read the transmittance of the inoculated blank. With the transmittance set at 1.00 for the inoculated blank, read the transmittance for each of the remaining tubes. If there is evidence of contamination with a foreign microorganism, disregard the result of the assay.

Calculation: Prepare a standard concentration-response curve as follows. For each level of the standard, calculate the response from the sum of the duplicate values of the transmittance as the difference, $y = 2.00 - \Sigma$ (of transmittance). Plot this response on the ordinate of cross-section paper against the logarithm of the mL of *Standard preparation* per tube on the abscissa, using for the ordinate either an arithmetic or a logarithmic scale, whichever gives the better approximation to a straight line. Draw the straight line or smooth curve that best fits the plotted points.

Calculate the response, y, adding together the two transmittances for each level of the *Assay preparation*. Read from the standard curve the logarithm of the volume of the *Standard preparation* corresponding to each of those values of y that fall within the range of the lowest and highest points plotted for the standard. Subtract from each logarithm so obtained the logarithm of the volume, in mL, of the *Assay preparation* to obtain the difference, x, for each dosage level. Average the values of x for each of three or more dosage levels to obtain $\bar{x} = M'$, the log-relative potency of the *Assay preparation*. Determine the quantity, in mg, of USP Calcium Pantothenate RS corresponding to the calcium pantothenate in the portion of material taken for assay as antilog:

$$M = \text{antilog}\ (M' + \log R)$$

R = the number of mg of calcium pantothenate that was assumed to be present in each mg (or capsule or tablet) of the material taken for assay

Replication: Repeat the entire determination at least once, using separately prepared *Assay preparations*. If the difference between the two log-potencies M is not greater than 0.08, their mean, $\overline{M}$, is the assayed log-potency of the test material (see *The Confidence Interval and Limits of Potency* ⟨111⟩). If the two determinations differ by more than 0.08, conduct one or more additional determinations. From the mean of two or more values of M that do not differ by more than 0.15, compute the mean potency of the preparation under assay.

ADDITIONAL REQUIREMENTS

- **USP Reference Standards ⟨11⟩**
  USP Calcium Pantothenate RS

⟨92⟩ GROWTH FACTORS AND CYTOKINES USED IN CELL THERAPY MANUFACTURING

INTRODUCTION

Qualification of reagents, source materials, and control of the manufacturing process are key elements that ensure the quality and safety of cell therapies. Growth factors and cytokines are important for the maintenance, growth, selection, and purification of cultures of cell therapy products. This chapter describes the accepted tests, procedures, and acceptance criteria for growth factors and cytokines that may be involved in the manufacturing of cell therapy products.

RECOMBINANT HUMAN INTERLEUKIN 4 (rhIL-4)

MHKCDITLQE	IIKTLNSLTE	QKTLCTELTV	TDIFAASKNT
TEKETFCRAA	TVLRQFYSHH	EKDTRCLGAT	AQQFHRHKQL
IRFLKRLDRN	LWGLAGLNSC	PVKEANQSTL	ENFLERLKTI
MREKYSKCSS			

$C_{658}H_{1071}N_{193}O_{197}S_8$ 15,096 Da

rhIL-4 is a single-chain polypeptide of 130 amino acid residues expressed in *Escherichia coli*. It is produced as a lyophilized powder and contains NLT 0.5×10^7 USP Units of IL-4/mg of total protein. Process specific host-cell DNA impurities in IL-4 with limits of less than 1 ng/mg are determined as described in *Nucleic Acid-Based Techniques—Approaches for Detecting Trace Nu-*

cleic Acids (Residual DNA Testing) ⟨1130⟩. Neither manufacturing license nor market approval is required for IL-4 intended for use as an ancillary material during manufacturing. Following are typical IL-4 quality attributes.

IDENTIFICATION

- **A.** Amino-terminal sequence analysis of at least eight amino acids is performed with an automated sequencer. Stepwise-released phenylthiohydantoin amino acids are identified with on-line reversed-phase high-performance liquid chromatography, on the basis of their elution times.
- **B.** Use the electrophoresis method followed by western blotting analysis to visualize the IL-4 protein. The method is sodium dodecyl sulfate polyacrylamide gel electrophoresis (SDS-PAGE), described in the test for *Purity*.

  Phosphate buffered saline; Laemmli sample buffer, reducing; and **Laemmli sample buffer, nonreducing:** Proceed as directed in the test for *Purity* in the *Assay*.

  Standard stock solution: 50 µg/mL of reconstituted USP rHuman Interleukin 4 RS in *Phosphate buffered saline.* [NOTE—Do not agitate while mixing; swirl gently.]

  Standard solution: 20 µg/mL of IL-4, from *Standard stock solution*, in *Phosphate buffered saline*

  Standard solution, reducing: Combine 20 µL of *Standard solution* and 5 µL of *Laemmli sample buffer, reducing.*

  Standard solution, nonreducing: Combine 20 µL of *Standard solution* and 5 µL of *Laemmli sample buffer, nonreducing.*

  Sample stock solution: 50 µg/mL of reconstituted IL-4 in *Phosphate buffered saline.* [NOTE—Do not agitate while mixing; swirl gently.]

  Sample solution: 20 µg/mL of IL-4, from *Sample stock solution*, in *Phosphate buffered saline*

  Sample solution, reducing: Combine 20 µL of *Sample solution* and 5 µL of *Laemmli sample buffer, reducing.*

  Sample solution, nonreducing: Combine 20 µL of *Sample solution* and 5 µL of *Laemmli sample buffer, nonreducing.*

  Analysis

  Samples: *Standard solution, reducing; Standard solution, nonreducing; Sample solution, reducing;* and *Sample solution, nonreducing*

  Western blotting: After electrophoresis, the proteins are transferred onto a polyvinylidene fluoride (PVDF) membrane using standard procedures. Incubate the membrane for 1 h at room temperature with *Phosphate buffered saline* containing 0.1% Tween 20 and 5% skim milk powder. The membrane is then incubated with an anti-IL-4 antibody[1] (diluted appropriately in *Phosphate buffered saline*), followed by incubation with a secondary antibody at room temperature under gentle agitation for 1 h for each of the antibodies. The IL-4 protein band is identified by developing the membrane using a suitable detection system.[2]

  Acceptance criteria: The developed Western blot should give a positive signal equivalent to the USP rHuman Interleukin 4 RS.

ASSAY

- **PURITY:** [NOTE—Purity is determined on the bulk material.] SDS-PAGE is performed as described under *Biotechnology-Derived Articles—Polyacrylamide Gel Electrophoresis* ⟨1056⟩ under reducing and nonreducing conditions.

  Molecular weight marker: Use a suitable molecular weight marker containing protein bands between 10 and 200 kDa.

  Phosphate buffered saline: 2.67 mM of potassium chloride, 1.47 mM of potassium phosphate (KH_2PO_4), 137.93 mM of sodium chloride, and 8.06 mM of dibasic sodium phosphate in water. Adjust to a pH of 7.0–7.3.

  Laemmli sample buffer, nonreducing: 100 mM TRIS-HCl, pH 6.8, 50% glycerol, 0.25% bromophenol blue indicator, and 10% sodium lauryl sulfate in water

  Laemmli sample buffer, reducing: Add 2.5 µL mercaptoethanol to 50 µL of *Laemmli sample buffer, nonreducing.*

  Sample stock solution: 400 µg/mL of bulk IL-4 in *Phosphate buffered saline*

  Sample solution 1: Combine 20 µL of *Sample stock solution* and 5 µL of *Laemmli sample buffer, nonreducing.*

  Sample solution 2: Combine 20 µL of *Sample stock solution* and 5 µL of *Laemmli sample buffer, reducing.*

  Control A stock solution: 4 µg/mL of IL-4, from *Sample stock solution*, in *Phosphate buffered saline.* [NOTE—*Control A solutions* are run in triplicates in both reducing and nonreducing conditions.]

  Control A solution 1: Combine 20 µL of *Control A stock solution* and 5 µL of *Laemmli sample buffer, nonreducing.*

  Control A solution 2: Combine 20 µL of *Control A stock solution* and 5 µL of *Laemmli sample buffer, reducing.*

  Control B stock solution: 12 µg/mL of IL-4, from *Sample stock solution*, in *Phosphate buffered saline.* [NOTE—*Control B solutions* are run in duplicates in both reducing and nonreducing conditions.]

  Control B solution 1: Combine 20 µL of *Control B stock solution* and 5 µL of *Laemmli sample buffer, nonreducing.*

  Control B solution 2: Combine 20 µL of *Control B stock solution* and 5 µL of *Laemmli sample buffer, reducing.*

  Electrophoretic conditions

  (See *Biotechnology-Derived Articles—Polyacrylamide Gel Electrophoresis* ⟨1056⟩.)

  Mode: Discontinuous PAGE gel

  Stacking gel: 4% acrylamide

  Resolving gel: 12% acrylamide

  Run conditions: 10 min at 100 V; then 30 min at 200 V

---

[1] A suitable anti-IL-4 antibody can be obtained from commercial sources (e.g., Dianova Inc.).

[2] A suitable detection system can be obtained from commercial sources (e.g., Pierce/Perbio Science).

Protein detection: Silver stain

Analysis

Samples: *Sample solution 1, Sample solution 2, Control A solution 1, Control A solution 2, Control B solution 1*, and *Control B solution 2*

Incubate 25 µL of each *Sample solution* and *Control solution* under nonreducing conditions for 5 min at 60°, and load onto the gel. Incubate 20 µL of each *Sample solution* and *Control solution* under reducing conditions for 5 min at 60°, and load onto the gel. After silver staining and scanning the whole gel, determine the intensity of all detectable protein bands by densitometry, and calculate the percentage of each detectable protein band, in the *Sample solution*, twice by comparing the pixel intensity of each contaminating band with the mean value of *Control solutions A* and *B*, respectively, by the formulas:

$$\text{Result} = (A_{100}) \times 1/(A_1) \text{ and}$$

$$\text{Result} = (A_{100}) \times 3/(A_3)$$

A_{100} = intensity of one contaminating band of the *Sample solution*
A_1 = mean intensity of all detectable bands of *Control A solution*
A_3 = mean intensity of all detectable bands of *Control B solution*

IL-4 control solutions analysis should yield one detectable band with an apparent molecular weight of approximately 15 kDa. If values calculated by means of *Control A solution* are different from those revealed by comparison with *Control B solution*, the value corresponding to the highest amount of impurity should be taken. If the intensity of one of the contaminating bands is lower than the value of *Control A solution* (corresponding to 1%), the value of this contamination is set to 1%. The purity of the sample solution is then calculated:

$$\text{Result} = 100 - \Sigma C_n$$

C = percentage of each contamination given in rounded whole numbers
n = number of contaminants of the IL-4 *Sample solution*

Acceptance criteria: The purity of IL-4 is NLT 97%, as determined by SDS-PAGE.

• **Protein Content:** [Note—Protein content is determined on the basis of the packaged product.]

Phosphate buffered saline: Proceed as directed in the test for *Purity*.

Sample solution: 50 µg/mL of IL-4 in *Phosphate buffered saline*. [Note—Do not agitate while mixing; swirl gently.]

Blank: *Phosphate buffered saline*

Spectrometric conditions

(See *Ultraviolet-Visible Spectroscopy* ⟨857⟩.)

Mode: UV

Pathlength: 1 cm

Analytical wavelength: 280 nm

Analysis

Samples: *Sample solution* and *Blank*

Calculate the protein concentration:

$$C = A_{280}/0.63$$

C = IL-4 concentration of the *Sample solution* (mg/mL)
A_{280} = absorbance at 280 nm

SPECIFIC TESTS

• **Bioidentity:** [Note—The biological activity measurement is determined on the basis of the packaged product.]

RPMI 1640 medium with L-glutamine: Prepare a mixture of the ingredients in the quantities shown in sufficient water to obtain 1 L of medium, and sterilize by filtration:

Material	Quantity
Calcium nitrate ($Ca(NO_3)·4H_2O$)	100 mg
Magnesium sulfate ($MgSO_4·7H_2O$)	100 mg
Potassium chloride	400 mg
Sodium chloride	6000 mg
Sodium phosphate, dibasic anhydrous	800 mg
Sodium bicarbonate	2000 mg
Glycine	10 mg
L-Arginine	200 mg
L-Asparagine	50 mg
L-Aspartic acid	20 mg

Material	Quantity
L-Polyvinylidene fluoride L-cystine dihydrochloride	20 mg
L-Glutamic acid	20 mg
L-Glutamine	300 mg
L-Histidine	15 mg
L-Hydroxyproline	20 mg
L-Isoleucine	50 mg
L-Leucine	50 mg
L-Lysine hydrochloride	40 mg
L-Methionine	15 mg
L-Phenylalanine	15 mg
L-Proline	20 mg
L-Serine	30 mg
L-Threonine	20 mg
L-Tryptophan	5 mg
L-Tyrosine disodium salt dihydrate	20 mg
L-Valine	20 mg
Biotin	0.2 mg
Choline chloride	3 mg
D-Calcium pantothenate	0.25 mg
Folic acid	1 mg
i-Inositol	35 mg
Niacinamide	1 mg
para-Aminobenzoic acid	1 mg
Pyridoxine hydrochloride	1 mg
Riboflavin	0.2 mg
Thiamine hydrochloride	1 mg
Vitamin B_{12}	0.005 mg
D-Glucose (dextrose)	2000 mg
Glutathione (reduced)	1 mg
Phenol red	5 mg

Growth medium: Using aseptic procedures, prepare the following tissue culture medium:

RPMI-1640 with L-glutamine	500 mL
Sodium pyruvate 100 mM	5 mL
Fetal bovine serum	50 mL
Human rGM-CSF[a]	3×10^4 International Units

[a] Granulocyte-Macrophage Colony-Stimulating Factor (GM-CSF) is added extemporaneously.

Sterilize by filtration, and store at between 2° to 8°. Use within 1 month. Add GM-CSF immediately before use.

Assay medium: Use *Growth medium* containing no GM-CSF.

Phosphate buffered saline: Proceed as directed in the test for *Purity* in the *Assay*.

Resazurin solution: 11 mg of resazurin in 100 mL of *Phosphate buffered saline*. [NOTE—Sterile filter and store solution protected from light at 4°. *Resazurin solution* is stable for at least 6 months if treated under sterile conditions.]

[NOTE—For all *Standard* and *Sample solutions*, IL-4 concentration is determined by photometry at 280 nm using an extinction coefficient (ε) of 0.63 $mg^{-1}cm^{-1}$.]

Standard stock solution: 50 µg/mL of USP rHuman Interleukin 4 RS in *Phosphate buffered saline*. [NOTE—Do not agitate while mixing; swirl gently.]

Standard solutions: 36, 12, 4, 1.33, 0.44, 0.15, 0.05, 0.016, 0.006 ng/mL of IL-4, from *Standard stock solution* in *Assay medium*

Sample stock solution: 50 µg/mL of IL-4 in *Phosphate buffered saline*. [NOTE—Do not agitate while mixing; swirl gently.]

Sample solutions: 36, 12, 4, 1.33, 0.44, 0.15, 0.05, 0.016, 0.006 ng/mL of IL-4, from *Sample stock solution* in *Assay medium*

Control solution: Use the *Assay medium*.

Cell culture preparation: Prepare cell cultures of the human factor-dependent TF-1 cell line (ATCC No. CRL-2003), following the protocol described in the ATCC information sheet. Passage the cultures every 2–3 days, using 1:3 subcultures of the

cells for up to 1 month. Seed density should be 0.5 × 10^6 cells/mL, and maximal density should be 3 × 10^6 cells/mL. Viability of the cells should be >90%. Maximal passage number is 24, and maximal cultivation time from thawing is 28 days. After 28 days, initiate a new culture. Cells are propagated using *Growth medium* at 37°, supplemented with air and 5% carbon dioxide.

Analysis

Samples: *Standard solutions, Sample solutions,* and *Control solution*

The activity of the *Sample solution* is determined in duplicate. Wash the cells three times in *Phosphate buffered saline.* Plate 2 × 10^4 TF-1 cells resuspended in 100 µL of *Assay medium* per well in 96-well, flat-bottom microplates. Incubate for 72 h at 37° and 5% CO_2 atmosphere in a humidified incubator in the presence or absence of various concentrations of *Standard solution, Sample solution,* or *Control solution* by adding 100 µL of the corresponding solution to each well. Add 30 µL of *Resazurin solution* to each well and incubate for another 24 h. Determine the fluorescence intensity per well by reading the plate with a microplate reader using 544 nm (excitation) and 590 nm (emission). Convert the fluorescence intensity in each well to a percentage of the maximum fluorescence intensity. For the *Sample solution* and *Standard solution,* plot the percentage of fluorescence intensity versus the concentration of the respective solution. By using the least squares method of regression analysis, compute the ED50 in ng/mL of the *Sample solution* and the *Standard solution.* The coefficient of determination for curve regression should be ≥ 0.98. Calculate the potency in USP Interleukin 4 Units/mg:

$$\text{Result} = A \times E_S/E_U$$

A = activity of USP rHuman Interleukin 4 RS (USP units/mg)
E_S = determined ED_{50} of *Standard solution* (ng/mL)
E_U = determined ED_{50} of *Sample solution* (ng/mL)

Acceptance criteria: NLT 0.5 × 10^7 USP IL-4 Units/mg

- **STERILITY TESTS ⟨71⟩:** Meets the requirements
- **BACTERIAL ENDOTOXINS TEST ⟨85⟩:** It contains NMT 50 USP Endotoxin Units/mg.

ADDITIONAL REQUIREMENTS

- **PACKAGING AND STORAGE:** Preserve in tight containers, and store at –80°.
- **LABELING:** Material is of recombinant DNA origin.
- **USP REFERENCE STANDARDS ⟨11⟩**
  USP Endotoxin RS
  USP rHuman Interleukin 4 RS

⟨111⟩ DESIGN AND ANALYSIS OF BIOLOGICAL ASSAYS

INTRODUCTION

The potency of several Pharmacopeial articles must be determined by bioassays. The aim of this chapter is to present a concise account of certain essential biometrical procedures for bioassays in chapters or monographs of *USP–NF*, namely outlier identification, confidence intervals for relative potency measurements, and combination of independent assays. For bioassays not in *USP–NF*, other methods may be appropriate. See general information chapter *Analysis of Biological Assays* ⟨1034⟩ which may be a helpful, but not mandatory, guidance.

REJECTION OF OUTLYING OR ABERRANT OBSERVATIONS

A response that is questionable because of failure to comply with the procedure during the course of an assay is rejected. Other aberrant values may be discovered only after the responses have been tabulated, but can then be traced to assay irregularities that justify their omission. The arbitrary rejection or retention of an apparently aberrant response can be a serious source of bias. In general, the rejection of observations solely on the basis of their relative magnitudes, without investigation as to cause, is a procedure to be used sparingly. Should it be understood, either following an investigation into cause or based on practical assay experience, that an observation's discordance is unlikely to arise from a reasonable expectation of response to assay treatments, then a suspected aberrant response or outlier may be tested against one of two criteria, both of which assume that the data have an approximately normal distribution (which may be satisfied only after a suitable transformation of the original responses). Alternative statistically sound approaches to outlier detection may be used. The conditions under which outlier testing will be conducted and the criterion to be used should be specified a priori in the lab's procedures if not specified in the monograph or chapter.

Criterion 1 (Dixon's Test)

The first criterion is based on the variation within a single group of supposedly equivalent responses, such as a group of animals given a common concentration of a sample. At a confidence level of 99%, a valid observation will be rejected once in 100 trials (when the suspected outlier can occur at only one end) or once in 50 trials (when the suspected outlier can occur at either end), provided that relatively few, if any, responses within the group are identical. Arrange the responses in order of magnitude from y_1 to y_N, where N is the number of observations in the group. Compute the relative gap by using the formulas in *Table 1* below.

Table 1

Sample Size (N)	Candidate Outlier is Smallest (y_1)	Candidate Outlier is Largest (y_N)
3–7	$G_1 = (y_2 - y_1)/(y_N - y_1)$	$G_1 = (y_N - y_{N-1})/(y_N - y_1)$
8–10	$G_2 = (y_2 - y_1)/(y_{N-1} - y_1)$	$G_2 = (y_N - y_{N-1})/(y_N - y_2)$
11–13	$G_3 = (y_3 - y_1)/(y_{N-1} - y_1)$	$G_3 = (y_N - y_{N-2})/(y_N - y_2)$

If G_1, G_2, or G_3, as appropriate, exceeds the critical value in *Table 2*, for the observed N, there is a statistical basis for identifying the discordant measurement as an outlier and considering its removal. For N larger than 13, use *Criterion 2*.

In samples from a normal population, at a confidence level of 99%, gaps equal to or larger than the following values of G_1, G_2, and G_3 occur with a probability $P = 0.01$, when outlier measurements can occur only at one end; or with $P = 0.02$, when they may occur at either end.

Table 2. Test for Outlier Measurements

N	3	4	5	6	7
G_1	0.988	0.889	0.780	0.698	0.637
N	8	9	10	—	—
G_2	0.683	0.635	0.597	—	—
N	11	12	13	—	—
G_3	0.679	0.642	0.615	—	—

Criterion 2 (Grubbs, Extreme Studentized Deviate Test)

The second criterion may be used to examine for outlying values in groups of supposedly equivalent responses and may also be used in examining the set of residuals from a fitted model (linear or nonlinear) where there is constant variance. The final model (which yields the residuals for outlier detection) should include all important design variables. (For further discussion of design variables, see general information chapter *Design and Development of Biological Assays* ⟨1032⟩, which may be a helpful, but not mandatory, resource.) (Note that for application to residuals, the following is an approximation. If the statistical software provides studentized residuals, those values should be used instead of those from the following equation.) For the value, R, that is furthest from the sample mean, compute the standardized deviation Z:

$$Z = (R - \bar{R})/S$$

where $\bar{R}$ and S are the mean and standard deviation, respectively, of the set of values. For residuals from a least squares fit, such as for a parallel line assay, $\bar{R} = 0$, and S is the square root of the residual mean square from the analysis. If $|Z|$ is greater than C as determined below, then the value R is identified as a statistical outlier at the 1% level.

$$C = \frac{(N-1)t_{df-1,p}}{\sqrt{N\left(N-2+t_{df-1,p}^2\right)}}$$

where N is the sample size, t is the one-sided 100p percentage point from the t distribution with df the degrees of freedom associated with S:

$$p = 1 - \frac{0.01}{2N}$$

Alternative outlier methods are available that are intended for use on data sets that may contain multiple outliers and for detection of outliers associated with the bioassay design or model. For further discussion of outliers, see general information chapter *Analytical Data—Interpretation and Treatment* ⟨1010⟩, which may be a helpful, but not mandatory, resource.

THE CONFIDENCE INTERVAL AND LIMITS OF POTENCY

The following method (Fieller's) is used to determine the confidence interval for an estimate of log relative potency from a parallel line assay or a slope ratio assay. Let $M = a/b$ be the ratio for which we need a confidence interval. For the estimates, a and b, we have their respective standard errors, SE_a and SE_b, and a covariance between them, denoted *Cov*. The confidence interval, (M_{Low}, M_{Up}), for the estimated log relative potency then is as follows:

$$(M_{Low}, M_{Up}) = \left\{ \frac{M - \frac{gCov}{SE_b^2} \pm \frac{t}{b}\sqrt{(1-g)\,SE_a^2 + M^2SE_b^2 - 2MCov + \frac{gCov^2}{SE_b^2}}}{1-g} \right\}$$

where:

$$g = \frac{t^2SE_b^2}{b^2}$$

and $t = t_{df,\alpha/2}$ is the upper $\alpha/2$ percentage point (or the two-sided α percentage point) with the residual degrees of freedom, *df*, from the statistical analysis and chosen confidence level, $100^*(1-\alpha)$, (usually 95%). If $g \geq 1$, it means that the denominator, b, is not statistically significantly different from 0 and the use of the ratio is not sensible for those data. The length, L, of this confidence interval is $M_{Up} - M_{Low}$.

For those cases in which the estimates of a and b are statistically uncorrelated ($Cov = 0$), the confidence interval formula simplifies to the following:

$$(M_{Low}, M_{Up}) = \left\{ \frac{M \pm \frac{t}{b}\sqrt{(1-g)\,SE_a^2 + M^2SE_b^2}}{1-g} \right\}$$

For further discussion of confidence intervals for potency, see chapter ⟨1034⟩ which may be a helpful, but not mandatory, resource.

COMBINATION OF INDEPENDENT ASSAYS

When the monograph or chapter permits, multiple independent assays may be performed until the combined results reduce the confidence interval width to within the limits specified in the pertinent monograph or chapter. Where two or more independent assays are required, each leading to a log-potency M, the M's are combined using one of the following two methods.

Method 1

Let M_i denote the logarithm of the relative potency of the ith assay of h assay results to be combined. To combine the h results, the mean, standard deviation, and standard error of the M_i are calculated in the usual way:

$$\text{Mean } \bar{M} = \sum_{i=1}^{h} M_i \big/ h$$

$$\text{Standard Deviation } S = \sqrt{\frac{1}{h-1}\sum_{i=1}^{h}(M_i - \bar{M})^2}$$

$$\text{Standard Error } SE = S/\sqrt{h}$$

A $100(1 - \alpha)\%$ confidence interval is then found as:

$$\bar{M} \pm t_{h-1\alpha/2}SE$$

where $t_{h-1,\alpha/2}$ is the upper $\alpha/2$ percentage point (or the two-sided α percentage point) of a t-distribution with $h - 1$ degrees of freedom. The width, L, of this interval is $2t_{h-1,\alpha/2}SE$.

Method 2

It is assumed that the results of each of the h assays have been analyzed to give h values of log potency with associated confidence limits. For each assay, i, obtain the confidence interval for the log potency or log relative potency. Then compute value L_i by subtracting the ith lower confidence limit from the ith upper confidence limit. A weight w_i for each value of the log relative potency, M_i, is calculated as follows, where t_i has the same t-distribution value as that used in the calculation of confidence limits in the ith assay and is based on n_i degrees of freedom:

General Chapters

$$W_i = \frac{4t_i^2}{L_i^2}$$

The products w_iM_i are formed for each assay, and their sum is divided by the total weight (w) for all assays to give the weighted mean log relative potency and its standard error as follows:

$$\left.\begin{array}{l} \text{Mean, } \bar{M} = \sum_{i=1}^{h} w_i M_i / w \\ \text{Approximate Standard Error, } SE = 1/\sqrt{w} \\ \text{where } w = \sum_{i=1}^{h} w_i \end{array}\right\} (1)$$

Next compute an approximate chi-square:

$$\chi_M^2 = \sum_{i=1}^{h} w_i (M_i - \bar{M})^2 = \sum_{i=1}^{h} w_i M_i^2 - w\bar{M}^2$$

If the value of the approximate χ^2_M is *well under* the 5% value shown in *Table 3*, compute the confidence interval using the mean and approximate standard error equations in (1) above; otherwise use *Alternate weights* as described below. Labs need to specify in their procedures how to quantify "well under". Absent such a specification, the 20% values of *Table 3* are suggested.

A 100(1 − α)% confidence interval in the log scale is then found as:

$$\bar{M} \pm L/2$$

$$\text{where } L = \frac{2t_{df,\alpha/2}}{\sqrt{w}} \sqrt{1 + \frac{4}{w^2} \times \sum_{i=1}^{h} \frac{w_i(w - w_i)}{n_i'}}$$

$$n_i' = n_i - 4 \times \frac{h-2}{h-1}$$

$$\text{and } df = w^2 \Big/ \sum_{i=1}^{h} w_i^2 / n_i$$

where $t_{N,\alpha/2}$ is the upper α/2 percentage point (or the two-sided α percentage point) of a *t*-distribution with degrees of freedom, *df*. The width of this interval is *L*.

Table 3. Critical Values for Approximate Chi-Square Test

	Critical Values	
h	**5%**	**20%**
2	3.841	1.642
3	5.991	3.219
4	7.815	4.642
5	9.488	5.989
6	11.070	7.289
7	12.592	8.558
8	14.067	9.803
9	15.507	11.030
10	16.919	12.242

Alternate weights: The observed variation among the estimated log potencies or relative potencies can be divided into two components:

- intra-assay variation for assay *i*: $V_i = 1/w_i$
- inter-assay component of variation:

$$s_B^2 = \max\{0, \frac{1}{h-1} \sum_{i=1}^{h} (M_i - \bar{M})^2 - \frac{1}{h} \sum_{i=1}^{h} V_i\}$$

For each assay, a weighting coefficient is then calculated as:

General Chapters

$$w'_i = \frac{1}{V_i + S_B^2}$$

The confidence interval is then found as:

$$\bar{M} \pm t \times SE',$$

$$\text{where } SE' = 1/\sqrt{w'} \text{ and } w' = \sum_{i=1}^{h} w'_i$$

and *t*, the *t-distribution value*, is often approximated by the value 2.

For further discussion of combination of assays, see ⟨1034⟩, which may be a helpful, but not mandatory, resource.

APPENDIX—KEY LITERATURE

Bliss, CI. Analysis of the biological assays in *USP XV*. *Drug Standards*, 24, 33–67, 1956.

Böhrer A. One-sided and two-sided critical values for Dixon's outlier test for sample sizes up to *n* = 30. *Economic Quality Control* 23, 5–13, 2008.

Cochran, WG. The combination of estimates from different experiments. *Biometrics* 10, 101–129, 1954.

Fieller, EC. Some problems in interval estimation. *Journal of the Royal Statistical Society, B* 16, 175–185, 1954.

Iglewicz, B and Hoaglin, DC. *How to Detect and Handle Outliers*. Quality Press, Milwaukee, 1993.

⟨115⟩ DEXPANTHENOL ASSAY

ASSAY

• Procedure

The following procedure is provided for the determination of dexpanthenol as an ingredient of multiple-vitamin preparations. It is applicable also to the determination of the dextrorotatory component of racemic panthenol and of other mixtures containing dextrorotatory panthenol.

Media may be prepared as described hereinafter, or dehydrated mixtures yielding similar formulations may be used provided that, when reconstituted as directed by the manufacturer or distributor, they have growth-promoting properties equal to or superior to those obtained from the formulas given herein.

Standard stock solution of dexpanthenol: Dissolve an accurately weighed quantity of USP Dexpanthenol RS in water, dilute with water to obtain a solution having a known concentration of about 800 µg per mL, and mix. Store in a refrigerator, protected from light, and use within 30 days.

Standard preparation: On the day of the assay, prepare a water dilution of the *Standard stock solution of dexpanthenol* to contain 1.2 µg of dexpanthenol per mL.

Assay preparation: Proceed as directed in the individual monograph for preparing a solution expected to contain approximately the equivalent of the dexpanthenol concentration in the *Standard preparation*.

Modified pantothenate medium: Dissolve the anhydrous dextrose and sodium acetate in the solutions previously mixed, and adjust with 1 N sodium hydroxide to a pH of 6.8. Finally, dilute with water to 250 mL, and mix.

Acid-hydrolyzed casein solution	25 mL
Cystine–tryptophane solution	25 mL
Polysorbate 80 solution	0.25 mL
Dextrose, anhydrous	10 g
Sodium acetate, anhydrous	5 g
Adenine–guanine–uracil solution	5 mL
Riboflavin–thiamine hydrochloride–biotin solution	5 mL
Para-aminobenzoic acid–niacin–pyridoxine hydrochloride solution	5 mL
Salt solution A	5 mL
Salt solution B	5 mL
Pyridoxal-calcium pantothenate solution	5 mL
Polysorbate 40–oleic acid solution	5 mL

Double-strength modified pantothenate medium: Prepare as directed under *Modified pantothenate medium*, but make the final dilution to 125 mL instead of 250 mL. Prepare fresh.

Acid-hydrolyzed casein solution: Mix 100 g of vitamin-free casein with 500 mL of 6 N hydrochloric acid, and reflux the mixture for 8 to 12 hours. Remove the hydrochloric acid from the mixture by distillation under reduced pressure until a thick paste remains. Redissolve the resulting paste in about 500 mL of water, adjust the solution with 1 N sodium hydroxide to a pH of 3.5 ± 0.1, and add water to make 1000 mL. Add 20 g of activated charcoal, stir for 1 hour, and filter. Repeat the treatment with activated charcoal. Store under toluene in a refrigerator at a temperature not below 10°. Filter the solution if a precipitate forms during storage.

Cystine–tryptophane solution: Suspend 4.0 g of L-cystine and 1.0 g of L-tryptophane (or 2.0 g of D,L-tryptophane) in 700 mL to 800 mL of water, heat to 75 ± 5°, and add dilute hydrochloric acid (1 in 2) dropwise, with stirring, until the solids are dissolved. Cool, add water to make 1000 mL, and mix. Store under toluene in a refrigerator at a temperature not below 10°.

Adenine–guanine–uracil solution: Dissolve 200 mg each of adenine sulfate, guanine hydrochloride, and uracil, with the aid of heat, in 10 mL of 4 N hydrochloric acid, cool, add water to make 200 mL, and mix. Store under toluene in a refrigerator.

Polysorbate 80 solution: Dissolve 25 g of polysorbate 80 in alcohol to make 250 mL, and mix.

Riboflavin–thiamine hydrochloride–biotin solution: Prepare a solution containing, in each mL, 20 µg of riboflavin, 10 µg of thiamine hydrochloride, and 0.04 µg of biotin, by dissolving riboflavin, thiamine hydrochloride, and biotin in 0.02 N acetic acid. Store, protected from light, under toluene in a refrigerator.

Para-aminobenzoic acid–niacin–pyridoxine hydrochloride solution: Prepare a solution in neutral 25 percent alcohol to contain 10 µg of para-aminobenzoic acid, 50 µg of niacin, and 40 µg of pyridoxine hydrochloride in each mL. Store in a refrigerator.

Salt solution A: Dissolve 25 g of monobasic potassium phosphate and 25 g of dibasic potassium phosphate in water to make 500 mL. Add 5 drops of hydrochloric acid, mix, and store under toluene.

Salt solution B: Dissolve 10 g of magnesium sulfate, 0.5 g of sodium chloride, 0.5 g of ferrous sulfate, and 0.5 g of manganese sulfate in water to make 500 mL. Add 5 drops of hydrochloric acid, mix, and store under toluene.

Pyridoxal–calcium pantothenate solution: Dissolve 40 mg of pyridoxal hydrochloride and 375 µg of calcium pantothenate in 10 percent alcohol to make 2000 mL, and mix. Store in a refrigerator, and use within 30 days.

Polysorbate 40–oleic acid solution: Dissolve 25 g of polysorbate 40 and 0.25 g of oleic acid in 20 percent alcohol to make 500 mL, and mix. Store in a refrigerator, and use within 30 days.

Stock culture of *Pediococcus acidilactici*: Dissolve in about 800 mL of water, with the aid of heat, 6.0 g of peptone, 4.0 g of pancreatic digest of casein, 3.0 g of yeast extract, 1.5 g of beef extract, 1.0 g of dextrose, and 15.0 g of agar. Adjust with 0.1 N sodium hydroxide or 0.1 N hydrochloric acid to a pH between 6.5 and 6.6, adjust the volume with water to 1000 mL, and mix. Add approximately 10-mL portions of the solution to culture tubes, place caps on the tubes, and sterilize at 121° for 15 minutes. Cool on a slant, and store in a refrigerator. Prepare a stock culture of *Pediococcus acidilactici** on a slant of this medium. Incubate at 35° for 20 to 24 hours, and store in a refrigerator. Maintain the stock culture by monthly transfer onto fresh slants.

Inoculum: Inoculate three 250-mL portions of *Modified pantothenate medium* from a stock culture slant, and incubate at 35° for 20 to 24 hours. Centrifuge the suspension from the combined portions, and wash the cells with *Modified pantothenate medium.* Resuspend the cells in sufficient *Modified pantothenate medium* so that a 1:50 dilution, when tested in a 13-mm diameter test tube, gives 80% light transmission at 530 nm. Transfer 1.2-mL portions of this stock suspension to glass ampuls, seal, freeze in liquid nitrogen, and store in a freezer. On the day of the assay, allow the ampuls to reach room temperature, mix the contents, and dilute 1 mL of thawed culture with sterile saline TS to 150 mL. [Note—This dilution may be altered, when necessary, to obtain the desired test response.]

Procedure: Prepare in triplicate a series of eight culture tubes by adding the following quantities of water to the tubes within a set: 5.0 mL, 4.5 mL, 4.0 mL, 3.5 mL, 3.0 mL, 2.0 mL, 1.0 mL, and 0.0 mL. To these same tubes, and in the same order, add 0.0 mL, 0.5 mL, 1.0 mL, 1.5 mL, 2.0 mL, 3.0 mL, 4.0 mL, and 5.0 mL of the *Standard preparation.*

Prepare in duplicate a series of five culture tubes by adding the following quantities of water to the tubes within a set: 4.0 mL, 3.5 mL, 3.0 mL, 2.0 mL, and 1.0 mL. To these same tubes, and in the same order, add 1.0 mL, 1.5 mL, 2.0 mL, 3.0 mL, and 4.0 mL of the *Assay preparation.*

Add 5.0 mL of *Double-strength modified pantothenate medium* to each tube, and mix. Cover the tubes with metal caps, and sterilize in an autoclave at 121° for 5 minutes. Cool to room temperature in a chilled water bath, and inoculate each tube with 0.5 mL of the *Inoculum.* Allow to incubate at 37° for 16 hours. Terminate growth by heating to a temperature not below 80°, such as by steaming at atmospheric pressure in a suitable sterilizer, for 5 to 10 minutes. Cool, and concomitantly determine the percentage transmittance of the suspensions, in cells of equal pathlength, on a suitable spectrophotometer, at 530 nm.

* American Type Culture Collection No. 8042 is suitable.

General Chapters

Calculation: Draw a dose-response curve on arithmetic graph paper by plotting the average response, in percent transmittance, for each set of tubes of the standard curve against the standard level concentrations. The curve is drawn by connecting each adjacent pair of points with a straight line. From this standard curve, determine by interpolation the potency, in terms of dexpanthenol, of each tube containing portions of the *Assay preparation.* Divide the potency of each tube by the amount of *Assay preparation* added to it, to obtain the individual responses. Calculate the mean response by averaging the individual responses that vary from their mean by not more than 15%, using not less than half the total number of tubes. Calculate the potency of the portion of the material taken for assay, in terms of dexpanthenol, by multiplying the mean response by the appropriate dilution factor.

ADDITIONAL REQUIREMENTS

- **USP Reference Standards ⟨11⟩**
  USP Dexpanthenol RS

⟨121⟩ INSULIN ASSAYS

INTRODUCTION

The most prominent manifestation of insulin activity, an abrupt decrease in blood glucose, was the basis for biologic assay from the time of its first clinical use. The assay, although relatively cumbersome, has the great merit of accurately reflecting the effect on the diabetic patient. The advent of practical yet sophisticated physicochemical methods (e.g., liquid chromatography) to measure insulin potency quantitatively has resulted in a more accurate and precise compendial test for insulin and insulin products. However, the bioidentity of insulin and insulin products cannot be assessed by these methods. Thus, a bioidentity test in rabbits is included in this chapter, and its use is called for in the appropriate monographs.

The *Rabbit Blood Sugar Method—Quantitative* is used to determine the potency of Insulin Reference Standards, for the validation of the stability of new insulin preparations, and to determine the specific activities of insulin analogs.

ASSAY

- **Rabbit Blood Sugar Method—Quantitative**

Diluent: Prepare an aqueous solution containing 0.1%–0.25% (w/v) of either cresol or phenol, 1.4%–1.8% (w/v) of glycerin, and sufficient hydrochloric acid to produce a pH between 2.5 and 3.5, unless otherwise directed in the individual monograph.

Standard stock solution: Prepare a solution containing 40 USP Insulin Units/mL of USP Insulin RS of the appropriate species in *Diluent* and having a pH between 2.5 and 3.5, unless otherwise directed in the individual monograph. For insulin of mixed bovine and porcine species, prepare a solution containing 34.8 USP Insulin Beef Units/mL and 5.2 USP Insulin Pork Units/mL in *Diluent* with a pH between 2.5 and 3.5. Store in a cold place, protected from freezing, and use within 6 months.

Standard solutions: Dilute portions of the *Standard stock solution* with *Diluent* to make two solutions, one to contain 1.0 USP Insulin Unit/mL (*Standard solution 1*), and the other to contain 2.0 USP Insulin Units/mL (*Standard solution 2*).

Sample stock solution: Proceed as directed in the *Standard stock solution,* except to use a suitable quantity of the preparation under test in place of USP Insulin RS of the appropriate species. The *Sample stock solution* contains about 40 USP Insulin Units/mL.

Sample solutions: Dilute portions of the *Sample stock solution* with *Diluent* to make two dilutions of the preparation under test, one of which may be expected, on the basis of the assumed potency, to contain 1.0 USP Insulin Unit/mL (*Sample solution 1*), and the other to contain 2.0 USP Insulin Units/mL (*Sample solution 2*). In the case of neutral insulin injection, adjust to a pH of 2.5–3.5 before making the dilutions.

Doses of the solutions to be injected: Select, on the basis of trial or experience, the dose of the dilutions to be injected, the volume of which usually will be between 0.30 and 0.50 mL. For each animal, the volume of the *Standard solution* is the same as that of the *Sample solution*.

Preparation of animal: Select suitable, healthy rabbits, each weighing NLT 1.8 kg. Keep the rabbits in the laboratory for NLT 1 week before use in the assay, maintaining them on an adequate uniform diet, with water available at all times.

Analysis: Divide the rabbits into four equal groups of preferably NLT six rabbits each. On the preceding day, approximately 20 h before the assay, provide each rabbit with an amount of food that will be consumed within 6 h. Follow the same feeding schedule before each test day. During the assay, withhold all food until after the final blood specimen is taken. Handle the rabbits with care to avoid undue excitement, and inject subcutaneously the doses indicated in the following design (see *Table 1*), the second injection being made on the day after the first injection, or NMT 1 week later. The time between the first and second injections is the same for all rabbits.

Table 1

Group	First Injection	Second Injection
1	*Standard solution 2*	*Sample solution 1*
2	*Standard solution 1*	*Sample solution 2*

Table 1 *(Continued)*

Group	First Injection	Second Injection
3	*Sample solution 2*	*Standard solution 1*
4	*Sample solution 1*	*Standard solution 2*

Blood samples: At 1 h ± 5 min and 2.5 h ± 5 min after the time of injection, obtain from each rabbit a suitable blood specimen from a marginal ear vein. Blood can also be collected effectively from the central auricular artery.

Dextrose determination: Determine the dextrose content of the blood specimens by a suitable procedure that is adapted to automated analysis. The following procedure may be used.

Anticoagulant solution: Dissolve 1 g of edetate sodium and 200 mg of sodium fluoride in 1 L of water, and mix.

Dextrose standard preparations: Transfer known concentrations of USP Dextrose RS to suitable vessels, and dilute quantitatively and stepwise with *Anticoagulant solution* (1:9) to obtain a range of *Dextrose standard preparations* containing between 20 and 100 mg per 100 mL, having known concentrations similar to the concentrations in the rabbit blood samples.

Sample preparations: Pipet into separate, suitable vessels 0.1 mL of each *Blood sample* and 0.9 mL of *Anticoagulant solution.*

Analysis: Subject the *Sample preparations* to dialysis across a semipermeable membrane for a sufficient time so that the dextrose passes through the membrane into a saline TS solution containing glucose oxidase, horseradish peroxidase, 3-methyl-2-benzothiazolinone hydrazone hydrochloride TS, and *N,N*-dimethylaniline. The absorbances of the *Sample preparations* are determined at 600 nm in a recording colorimeter. The absorbances of the *Dextrose standard preparations* are similarly determined at the start and the end of each run.

Calculation: Calculate the response of each rabbit to each injection from the sum of the two blood sugar values, and subtract its response, disregarding the chronological order in which the responses were observed, to obtain the individual differences, *y*, as shown in *Table 2*.

When the data for one or more rabbits are missing in an assay, do not use the confidence interval formulas given here, but seek statistical help. The data can still be analyzed with proper analysis of variance.

When the number of rabbits, *f*, carried through the assay is the same in each group, total the *y*'s in each group and compute:

$$T_a = -T_1 + T_2 + T_3 - T_4$$

and

$$T_b = T_1 + T_2 + T_3 + T_4$$

The logarithm of the relative potency of the test dilutions is $M' = 0.301\,T_a/T_b$. The potency of the injection in USP Units/mg equals the antilog ($\log R + M'$), where:

$$R = v_S/v_U$$

v_S = number of USP Units/mL of the *Standard solution*

v_U = number of mg/mL of insulin of the corresponding *Sample solution*

Determine the 95% confidence interval for the log-relative potency using Fieller's Theorem (see *Appendix* and *Design and Analysis of Biological Assays* ⟨111⟩). If the confidence interval is more than 0.082, which corresponds at $P = 0.95$ to confidence limits of about ±10% of the computed potency, repeat the assay until the combined data of the two or more assays, redetermined as described in *Combination of Independent Assays* in ⟨111⟩, meet this acceptable limit.

Table 2

Group	Differences	Individual Response (y)	Total Response (T)	Standard Deviations of Differences (S)
1	*Standard solution 2 – Sample solution 1*	y_1	T_1	S_1
2	*Sample solution 2 – Standard solution 1*	y_2	T_2	S_2
3	*Sample solution 2 – Standard solution 1*	y_3	T_3	S_3
4	*Standard solution 2 – Sample solution 1*	y_4	T_4	S_4

Appendix: Fieller's Theorem for Determining the Confidence Interval for a Ratio

This version of Fieller's Theorem is for the case where the numerator and denominator are uncorrelated. The equation assumes that the numerator and denominator are normally distributed and that the groups of rabbits are of equal sizes.

Then, the 95% confidence interval for the ratio is:

$$(L,U) = \frac{M' \pm \frac{t}{T_b}\sqrt{(1-g)S_N^2 + (M')^2 S_D^2}}{1-g}$$

where *f* (degrees of freedom in the standard errors) = 4(*k* – 1), where *k* is the number of rabbits in a group, *t* is the upper 97.5 percentile of the *t*-distribution with *f* degrees of freedom, and

$$g = \frac{t^2 S_D^2}{T_b^2}$$

If $g \geq 1$, the denominator is not significantly different from 0 and the formula does not work.

$$S_N = 0.301\sqrt{k}\sqrt{S_1^2 + S_2^2 + S_3^2 + S_4^2}$$

$$S_D = \sqrt{k}\sqrt{S_1^2 + S_2^2 + S_3^2 + S_4^2}$$

• **Bioidentity Test**

Proceed as directed in *Rabbit Blood Sugar Method—Quantitative* with the following modifications.

Procedure: Divide the rabbits into four equal groups of two rabbits each.

Calculation: Proceed as directed for *Calculation* in *Rabbit Blood Sugar Method—Quantitative*, but do not determine the confidence interval of the log-relative potency, *M′*.

Interpretation: If the potency value obtained is NLT 15 USP Units/mg, the *Bioidentity Test* requirement is met. If the potency value is less than 15 USP Units/mg, repeat the test using eight more rabbits. If the average potency of the two sets of tests is NLT 15 USP Units/mg, the requirement of the test is met.

ADDITIONAL REQUIREMENTS

• **USP Reference Standards ⟨11⟩**

USP Dextrose RS
USP Insulin Aspart RS
USP Insulin Beef RS
USP Insulin Glargine RS
USP Insulin Human RS
USP Insulin Lispro RS
USP Insulin Pork RS

⟨121.1⟩ PHYSICOCHEMICAL ANALYTICAL PROCEDURES FOR INSULINS

INTRODUCTION

Several physicochemical procedures are used for the assessment of the quality attributes of Insulin Human, various insulin analogues, and animal derived insulins, hereafter called insulins. Of these procedures, peptide mapping and determination of high molecular weight proteins are similar for the various insulin drug substances and drug products. This chapter describes the tests for peptide mapping and for quantitative analysis of high molecular weight proteins that can be used for the various insulins.

Specific instructions that deviate from the general procedures outlined here are given in the respective drug substance or drug product monographs for the different insulins.

PEPTIDE MAPPING

Insulin digestion is performed using *Staphylococcus aureus* strain V8 (*S. aureus* V8) protease (also referred to as Endoproteinase Glu-C), a serine endoproteinase that cleaves at the C-terminal side of glutamyl and aspartyl residues in phosphate buffer at pH 7.8. This protease is specific for Glu-C digestion in ammonium bicarbonate or other non-phosphate-containing buffers at pH 7.8. The presence of proline on the carboxy side of the peptide bond inhibits cleavage. The buffer system used should cleave all glutamyl bonds in insulin without cleavage of the aspartyl bonds. In general, insulin is digested into four peptides in the buffer system described in the *Sample solution* below.

The following show the amino acid differences of the insulin analogues compared to Insulin Human and the *in silico* differences in the fragments obtained upon digestion with *S. aureus* V8 protease.

Figure 1 shows the four fragments of Insulin Human following digestion with *S. aureus* V8 protease.

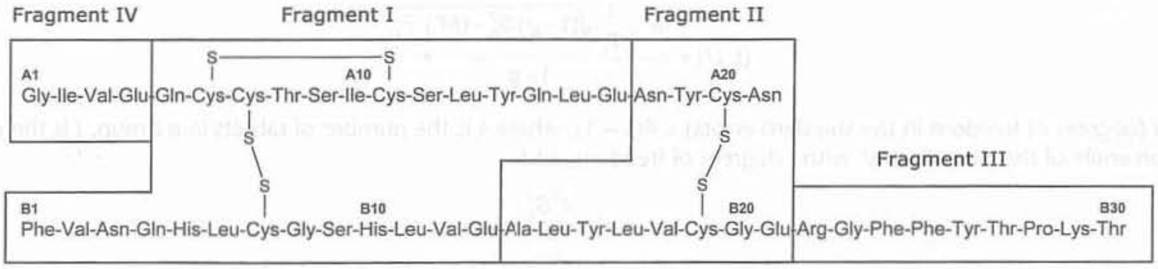

Figure 1. Insulin Human: *S. aureus* V8 protease digest fragments.

Table 1 shows the amino acid differences between insulin analogues, animal derived insulins, and Insulin Human.

Table 1. Amino Acid Differences between Insulin Analogues, Animal Derived Insulins, and Insulin Human

Insulin	Amino Acid Differences from Insulin Human
Insulin aspart	B28 Asp
Insulin glargine	A21 Gly, two Arg added to C-terminus of B chain
Insulin glulisine	B3 Lys, B29 Glu
Insulin lispro	B28 Lys, B29 Pro
Insulin porcine	B30 Ala
Insulin bovine	A8 Ala, A10 Val, B30 Ala

Table 2 shows specific *S. aureus* V8 protease digest fragments of insulin analogues and animal derived insulins. Amino acid differences compared to Insulin Human are highlighted.

Table 2. Amino Acid Differences: Insulin Human, Insulin Analogues, and Animal Derived Insulins (Differences with Insulin Human Are Shown in Boldface)

Insulin	Amino Acid Differences Compared to Insulin Human[a]	
Insulin aspart	Fragment III	(B22) Arg-Gly-Phe-Phe-Tyr-Thr-**Asp**-Lys-Thr (B30)
Insulin glargine	Fragment II	(A18) Asn-Tyr-Cys-**Gly** (A21)
	Fragment III	(B22) Arg-Gly-Phe-Phe-Tyr-Thr-Pro-Lys-Thr-**Arg-Arg** (B32)
Insulin glulisine	Fragment I	(B1) Phe-Val-**Lys**-Gln-His-Leu-Cys-Gly-Ser-His-Leu (B11)
	Fragment III	(B22) Arg-Gly-Phe-Phe-Tyr-Thr-Pro-**Glu**-Thr (B30)
Insulin lispro	Fragment III	(B22) Arg-Gly-Phe-Phe-Tyr-Thr-**Lys-Pro**-Thr (B30)
Insulin porcine	Fragment III	(B22) Arg-Gly-Phe-Phe-Tyr-Thr-Pro-Lys-**Ala** (B30)
Insulin bovine	Fragment I	(A5) Gln-Cys-Cys-**Ala**-Ser-**Val**-Cys-Ser-Leu-Tyr-Gln-Leu-Glu (A17)
	Fragment III	(B22) Arg-Gly-Phe-Phe-Tyr-Thr-Pro-Lys-**Ala** (B30)

[a] A and B denote the A and B chains of insulin, respectively; numbers denote amino acid position in the chain.

• **Peptide Mapping Procedure**

The following procedure is applicable for preparing peptide maps of Insulin Human, insulin analogues, and animal derived insulins.

HEPES buffer: Dissolve 2.38 g of HEPES (*N*-2-hydroxyethylpiperazine-*N*′-2-ethanesulfonic acid) in about 90 mL of water in a 100-mL volumetric flask. Adjust with 5 M sodium hydroxide to a pH of 7.5, dilute with water to volume, and mix.

Sulfate buffer: 2.0 M ammonium sulfate and 0.5 M sulfuric acid (1:1). Mix, and filter.

• **Insulin Digestion**

The following procedure provides efficient cleavage of the glutamyl bonds of insulin. [Note—Volumes up to 20-fold higher can be used as long as the ratio of the solutions remains the same. If interfering autolysis byproducts are observed in the chromatogram when a digest of the enzyme alone is run, the enzyme-to-insulin ratio must be decreased and digestion time must be increased.]

Enzyme solution: Prepare a 1-mg/mL solution of *S. aureus* V8 protease in water (approximately 500 units/mg using casein as the substrate).

Sample solution: Prepare a 2.0-mg/mL solution of the insulin to be examined in 0.01 N hydrochloric acid. To a clean vial add 25 µL of the 2.0-mg/mL insulin solution, 100 µL of *HEPES buffer*, and 20 µL of *Enzyme solution* (final ratio is 25:100:20). Cap the vial, and incubate at 25° for 6 h. Stop the reaction by adding an equal volume of *Sulfate buffer*. Longer incubation times may be needed for analogues with poor solubility at pH 7.5.

Standard solution: Prepare at the same time and in the same manner a solution of the appropriate USP Insulin Reference Standard as directed in the *Sample solution*.

• **Peptide Fragment Determination**

Determine the peptide fragments using the following peptide mapping procedure (see *Biotechnology-Derived Articles—Peptide Mapping* ⟨1055⟩).

Solution A: Acetonitrile, water, and *Sulfate buffer* (100:700:200). Filter, and degas.

Solution B: Acetonitrile, water, and *Sulfate buffer* (400:400:200). Filter, and degas.

Mobile phase: See *Table 3*.

Table 3

Time (min)	Solution A (%)	Solution B (%)
0	95	5
3	95	5
30	41	59
35	20	80
40	95	5
50	95	5

Chromatographic system

(See *Chromatography* ⟨621⟩, *System Suitability*.)

Mode: LC

Detector: UV 214 nm

Column: 4.6-mm × 10-cm; 5-µm packing L1

Column temperature: 40°

Flow rate: 1 mL/min

Injection volume: 50–100 µL

System suitability

Sample: *Standard solution*

Suitability requirements

Chromatogram comparability: In the chromatogram obtained from the *Standard solution*, identify the peaks due to digest fragments I, II, III, and IV. The chromatogram of the *Standard solution* corresponds to that of the typical chromatogram provided with the appropriate USP Insulin Reference Standard.

Resolution: There should be complete separation of the peaks due to fragments II and III. The resolution is defined in the applicable insulin monograph.

Tailing factor: NMT 1.5 for digest fragments II and III

Analysis

Samples: *Sample solution* and *Standard solution*

Condition the *Chromatographic system* by running at initial conditions, $t = 0$ min, for at least 15 min. Carry out a blank gradient program before injecting the digests. Separately inject equal volumes of the *Standard solution* and the *Sample solution*, and record the responses of each peak.

Acceptance criteria: The chromatographic profile of the *Sample solution* corresponds to that of the *Standard solution*.

LIMIT OF HIGH MOLECULAR WEIGHT PROTEINS

• **Procedure**

Solution A: 1 mg/mL of L-arginine in water

Mobile phase: *Solution A*, acetonitrile, and glacial acetic acid (65:20:15). Filter, and degas.

Resolution solution: Store a suitable amount of insulin drug substance at room temperature for a sufficient period of time (5–10 days, or as needed) to obtain insulin with more than 0.4% high molecular weight proteins. Prepare a 4-mg/mL solution in 0.01 N hydrochloric acid. Store the solution in a refrigerator, and use within 7 days. Alternatively, dissolve about 4 mg of USP High Molecular Weight Insulin Human RS in 1 mL of 0.01 N hydrochloric acid.

Sample solution: In a small vial, prepare a 4-mg/mL solution of insulin in 0.01 N hydrochloric acid, and mix to dissolve. Store in a refrigerator, and use within 7 days.

Chromatographic system

(See *Chromatography* ⟨621⟩, *System Suitability*.)

Mode: LC

Detector: UV 276 nm

Column: 7.8-mm × 30-cm; 5- to 10-µm packing L20

Temperatures

Autosampler: It is advisable to use a refrigerated autosampler.

Column: Ambient

Flow rate: 0.5 mL/min

Injection volume: 100 µL

System suitability

Sample: *Resolution solution*

Suitability requirements

Retention times: Between 13 and 17 min for the polymeric insulin complexes, about 17.5 min for the covalent insulin dimer, and between 18 and 22 min for the insulin monomer, with salts eluting after the insulin monomer

Peak-to-valley ratio: The ratio of the height of the covalent insulin dimer peak to the height of the valley between the covalent insulin dimer peak and the insulin monomer peak is NLT 2.0.

Analysis

Sample: *Sample solution*

Disregard any peaks with retention times greater than that of the insulin monomer.

Calculate the percentage of high molecular weight proteins in the portion of Insulin taken:

$$\text{Result} = \Sigma r_H/(\Sigma r_H + r_M) \times 100$$

Σr_H = sum of the responses of all peaks with retention times less than that of the insulin monomer

r_M = peak response of the insulin monomer

Acceptance criteria: As stated in the applicable insulin monograph

ADDITIONAL REQUIREMENTS

• **USP Reference Standards 〈11〉**

USP High Molecular Weight Insulin Human RS (alternative, optional)

〈123〉 GLUCAGON BIOIDENTITY TESTS

DEFINITION

Glucagon is a polypeptide hormone that increases blood glucose levels via release of liver glycogen stores and is clinically used to treat hypoglycemia. Human, porcine, and bovine glucagon share an identical 29 amino acid sequence. Commercially available Glucagon was previously purified from bovine and porcine pancreas glands. Today, human glucagon is recombinantly produced (rGlucagon) with various microbial fermentation systems using the human amino acid sequence. The *USP–NF Glucagon for Injection* monograph defines glucagon identification tests. Glucagon bioidentity must be determined using a validated bioassay method approved by a competent authority. The bioassay must demonstrate that the manufacturing process produces Glucagon that has a biologic activity of NLT 0.80 USP Unit/mg of glucagon. This chapter describes a validated glucagon bioidentity test that measures glucose released from freshly prepared rat liver cells (hepatocytes) stimulated with Glucagon in vitro.

ASSAY

• **Primary Liver Cell Assay**

[Note—All buffers are oxygenated, prepared with either *Sterile Water for Injection* or *Sterile Water for Irrigation*, warmed to 37°, and adjusted to a final pH of 7.4 unless otherwise indicated. At least two independent assays (replicates) must be performed utilizing two rat livers for each lot of Glucagon. *Figure 1* demonstrates the process used to generate one replicate value. A minimum of two replicates are combined according to the *Calculations* section. The concentration range of the *Standard preparations* and *Assay preparations* may be modified to fall within the linear range of the *Assay*, and the calculations can be adjusted accordingly. Alternatively, full curve analysis using validated nonlinear statistical methods can be used, provided that similarity is demonstrated when analysts compare the responses of the *Standard preparations* and *Assay preparations*.]

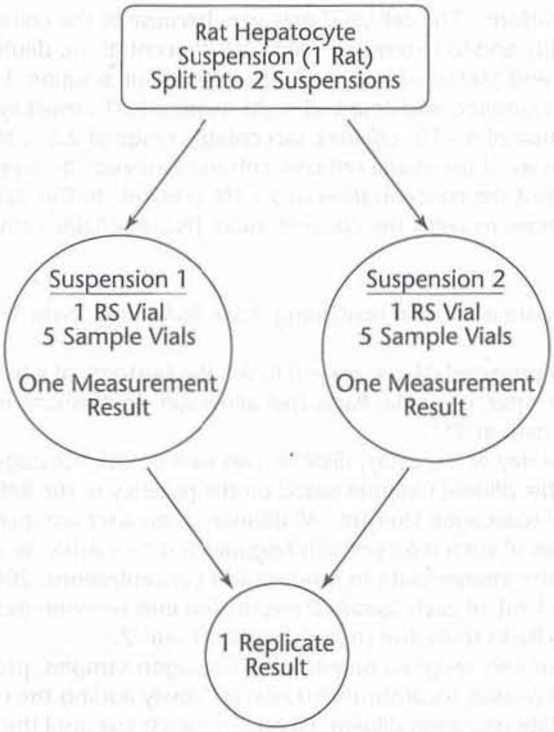

Figure 1. Rat hepatocyte assay method flow diagram (RS = Reference Standard).

Hepatocyte Preparation

Calcium-free perfusion buffer with dextrose: Prepare a solution containing 7.92 g/L of sodium chloride, 0.35 g/L of potassium chloride, 1.80 g/L of dextrose, 0.19 g/L of edetic acid (EDTA), and 2.38 g/L of 4-(2-hydroxyethyl)-1-piperazineethanesulfonic acid (HEPES). Oxygenate before use.

Collagenase buffer: Prepare a solution containing 3.62 g/L of sodium chloride, 23.83 g/L of HEPES, 0.35 g/L of potassium chloride, 0.52 g/L of calcium chloride, and 1.8 g/L of dextrose. Adjust to a pH of 7.6. Immediately before perfusion, dissolve a quantity of collagenase in this solution to obtain a concentration of 0.02%–0.05%. The exact concentration of collagenase is determined empirically for each new lot of enzyme and is the amount that can consistently dissociate the tissue within 10 min of buffer entry and produce a viable cell concentration of NLT 3×10^6 cells/mL.

Wash buffer: Prepare a solution containing 7.92 g/L of sodium chloride, 0.35 g/L of potassium chloride, 0.19 g/L of EDTA, 2.38 g/L of HEPES, 0.11 g/L of calcium chloride, and 0.06 g/L of magnesium sulfate.

Incubation buffer: Prepare a solution containing 6.19 g/L of sodium chloride, 0.35 g/L of potassium chloride, 0.22 g/L of calcium chloride, 0.12 g/L of magnesium sulfate, 0.16 g/L of monobasic potassium phosphate, 11.915 g/L of HEPES, and 10 g/L of bovine serum albumin (1% BSA). Adjust to a pH of 7.5.

Test animals: Male Sprague-Dawley rats are maintained on a standard rat chow diet, given water ad libitum, and allowed to adjust to their new housing before testing. On the morning of the test, select a healthy rat weighing approximately 300–400 g, and administer 100 Units of Heparin Sodium subcutaneously.

Procedure: [NOTE—Conduct this procedure in the morning to ensure that the rat has optimal glycogen in its liver and so that the procedure can be completed in one day.] Anesthetize the rat with an appropriate anesthetic. Open the abdominal cavity, and isolate the portal vein. Insert an angiocatheter and tie into the portal vein at the general location of the lienal branch and then connect to a perfusion pump. Start the perfusion (25 mL/min) in situ with the previously warmed, oxygenated, *Calcium-free perfusion buffer with dextrose*. As the liver enlarges, cut the inferior vena cava to allow pressure equilibrium. [NOTE—About 300 mL of the perfusate is needed to clear the liver of red blood cells at a flow rate of 25–60 mL/min.] Then circulate *Collagenase buffer* at an appropriate flow rate so that the liver leaks perfusate out of the lobes in approximately 10 min (typically 25–60 mL/min). When the liver significantly increases in size, changes color and consistency, and starts to leak perfusate out of the lobes, change the system to the oxygenated prewarmed *Wash buffer*. About 100 mL of *Wash buffer* is needed to wash the liver of collagenase at a flow rate of 25 mL/min. Surgically remove the liver from the animal, and place in a prewarmed Petri dish containing a small amount of oxygenated *Wash buffer* (37°). Gently comb the liver with a stainless steel, fine-toothed comb to free the hepatocytes. Filter and wash the hepatocytes with *Wash buffer*, through prewetted cheesecloth (3 layers thick, or through a 150-µm mesh polyethylene net) into a beaker. Transfer the cells to two centrifuge tubes, and spin for about 1 min at 600 rpm. Discard the supernatant fractions, and resuspend the two pellets in *Incubation buffer*. Combine the two pellets in a suitable container, and add sufficient *Incubation buffer* to make 150 mL.

General Chapters

System suitability of cell preparation: The cell yield may vary because of the collagenase activity and the viability of the hepatocytes. To check cell viability and to determine viable cell concentration, dilute a 100-µL aliquot of the cell suspension with 400 µL of *Wash buffer* and 500 µL of isotonic 0.4% trypan blue solution. Load aliquots of the cell suspension into both chambers of a hemocytometer, and count all eight quadrants. To meet system suitability of the cell preparation method, a viable cell concentration of 3×10^6 cells/mL (acceptable range of 2.5×10^6 to 3.4×10^6 cells/mL) must be obtained to proceed with the bioassay. If the viable cell concentration exceeds the upper limit, additional *Incubation buffer* may be added to the cells to adjust the concentration to 3×10^6 cells/mL. In this case, the cells are counted again in a hemocytometer, as described above to verify the concentration. [NOTE—Viable cells are those cells that exclude the trypan blue.]

Glucose Determination

Negative control solution: Prepare a solution containing 0.5% BSA using *Sterile Water for Injection* or *Sterile Water for Irrigation*.

Incubation flasks: Use specially prepared 25-mL conical flasks, the bottoms of which have been heated and pushed inward to form a conically raised center, or similar flasks that allow sufficient mixing when swirling. Place the *Incubation flasks* in an orbital shaker water bath at 35°.

Standard preparations: On the day of the assay, dissolve two vials of USP rGlucagon RS, accurately measured, in 0.01 N hydrochloric acid or other suitable diluent (volume based on the potency of the Reference Standard lot) to obtain two solutions each containing 1 USP rGlucagon Unit/mL. All dilutions thereafter are made using *Negative control solution*. Accurately dilute measured volumes of each solution with *Negative control solution* to obtain an intermediate concentration of 400 µU/mL, and then dilute the intermediate to produce five concentrations: 200, 100, 50, 25, and 12.5 µU/mL (*Standard preparations*). Pipet 0.1 mL of each *Standard preparation* into separate *Incubation flasks*. Pipet 0.1 mL of *Negative control solution* into each of two flasks (*Negative control solutions 1* and *2*).

Assay preparations: Using accurately weighed quantities of Glucagon samples, proceed as directed for *Standard preparations* or, if testing *Glucagon for Injection*, reconstitute 10 vials by slowly adding the contents of the accompanying prefilled syringes containing an appropriate glucagon diluent. Gently mix each vial until the glucagon is dissolved. Using the same syringes, withdraw the contents of five vials and place the solutions in a 25-mL volumetric flask. Repeat for the second five vials, transferring the contents to a second 25-mL volumetric flask. Dilute each flask with 0.01 N hydrochloric acid to volume. Dilute an accurate amount of each solution with 0.5% BSA to yield a concentration of 400 µU/mL, and dilute the intermediate to produce five *Assay preparation* concentrations: 200, 100, 50, 25, and 12.5 µU/mL. Then proceed as directed for the *Standard preparations*.

Reference stock solution: Dry USP Dextrose RS, and then transfer 1.0 g, accurately weighed, to a 100-mL volumetric flask. Dissolve in and dilute with saturated benzoic acid solution to volume.

Reference solutions: Transfer suitable quantities of *Reference stock solution* to four flasks, and dilute with saturated benzoic acid solution to obtain *Reference solutions* having concentrations of 100, 500, 1000, and 1500 mg/L.

Potassium ferrocyanide solution: Dissolve 1.25 g of trihydrate potassium ferrocyanide in 125 mL of *Sterile Water for Injection*, or use an appropriate commercial source.

System suitability: Analyze the *Potassium ferrocyanide solution*, the *Reference solutions*, and an additional five replicates of either the 500- or 1000-mg/L *Reference solution* in an appropriate glucose analyzer. [NOTE—*Potassium ferrocyanide solutions* are only appropriate standards for glucose analyzers that measure glucose oxidase activity. The procedure can also be performed using alternative platforms.] Prepare a standard curve using the *Reference solutions* as directed for the *Standard preparations*. The square root of the residual error mean square from the regression divided by the average of the response multiplied by 100% (line %RSD) must be NMT 2.0%. In addition, the response of the *Potassium ferrocyanide solution* must be NMT 30 mg/L, and the relative standard deviation must be NMT 2.0% for the replicate analyses of the middle *Reference solution*.

Procedure: Dispense 5 mL of *Hepatocyte Preparation* into the *Incubation flasks* in sequence from high glucagon concentration to low glucagon concentration, alternating the *Standard preparations* with the *Assay preparations*. Swirl the flasks in an orbiting water bath at 125 rpm at 30°–35° for approximately 30 min. Following incubation, remove 1.0-mL aliquots from each *Incubation flask*, transfer to labeled microcentrifuge tubes, and centrifuge at 13,000 rpm for 15 s. Place each supernatant fraction in a labeled sampling tube for a glucose analyzer, and determine the glucose concentration (mg/L) of each *Standard preparation* and *Assay preparation*. Measure the background reading of the *Negative control solutions 1* and *2*, and calculate the average of the two responses.

To conform to the linear range of the instrument being used, analysts may find it necessary to adjust by dilution each of the *Standard preparations* and *Assay preparations*. Use a glucose analyzer that has demonstrated appropriate specificity, accuracy, precision, and linear response over the range of concentrations being determined. Determine the increase in glucose concentration for each *Standard preparation* and *Assay preparation* compared to the average value of the *Negative control solution*.

Calculations

Calculate the relative potency of the Glucagon samples using statistical methods for parallel-line assays, comparing the Reference Standard curve (from the *Standard preparations*) to the Glucagon sample curve (from the *Assay preparations*). No dose–response reversals may occur within a run for the 25-, 50-, or 100-µU/mL *Standard preparations* and *Assay preparations*. [NOTE—Either the low- or high-dose level, but not both, may be excluded from the calculation in order to meet

linearity requirements.] Because a minimum of two valid assays (rats) are required, the estimated potencies are combined using the procedures in *Design and Analysis of Biological Assays* ⟨111⟩, *Combination of Independent Assays*, and the width, *L*, of a 95% confidence interval for the estimated logarithm of the relative potency is calculated. If *L* is NMT 0.1938, the results are valid. If *L* is >0.1938, additional assays may be performed and combined until a valid *L* term results, and the relative potency is then calculated from all valid independent runs. Calculate the potency of the Glucagon samples in USP rGlucagon Units/mg by multiplying the relative potency result by the potency of USP rGlucagon RS. It meets the requirement of bioidentity if the potency is NLT 0.80 USP rGlucagon Unit/mg.

ADDITIONAL REQUIREMENTS

- **USP Reference Standards** ⟨11⟩
  USP Dextrose RS
  USP rGlucagon RS

⟨124⟩ ERYTHROPOIETIN BIOASSAYS

INTRODUCTION

This chapter provides guidance about the use of bioassays to measure the biological activity of erythropoietin (EPO). Based on a relative potency approach described in general chapter *Design and Development of Biological Assays* ⟨1032⟩, the biological activity of an unknown EPO preparation typically is determined by comparison to the biological activity of a Reference Standard (RS). For this purpose, a USP Erythropoietin for Bioassays RS has been developed. The assays described in the chapter are not applicable to forms of EPO that have been engineered to prolong their half-life.

The USP Erythropoietin for Bioassays RS has been calibrated against the World Health Organization (WHO) International Standard for EPO using both the normocythemic mouse bioassay and the exhypoxic polycythemic mouse bioassay. Accordingly, the USP Erythropoietin for Bioassays RS has an assigned unitage in terms of International Units (IU) of EPO as defined by WHO. Of these two in vivo bioassays, the normocythemic mouse bioassay is less cumbersome and is more widely used for the determination of EPO potency. The assay is based on the measurement of EPO-stimulated reticulocyte maturation. Because the USP Erythropoietin for Bioassays RS has been calibrated against the WHO International Standard for EPO by in vivo bioassay, it can be used directly in the normocythemic mouse bioassay for the calibration of any process-specific EPO preparation.

However, if the intent is to use a validated in vitro bioassay to transfer the unitage from the USP Erythropoietin for Bioassays RS to a process-specific EPO preparation, then it is necessary to demonstrate that the USP Erythropoietin for Bioassays RS and the process-specific EPO preparation exhibit an equivalent ratio of in vitro to in vivo potency. This is because the biological activity of EPO shows a complex relationship between structure and function. In particular, the ratio of in vitro to in vivo activity is inversely correlated with type and degree of terminal sialylation. Highly sialylated products have a higher level of in vivo activity; thus, they have a relatively lower ratio of in vitro to in vivo activity. Because of differences in the manufacturing processes used in the preparation of EPO, the type and degree of terminal sialylation can be variable from one EPO preparation to another, including EPO preparations used as Reference Standards. As a result, the use of an in vitro assay to measure the biological activity of an EPO preparation requires a full understanding of the relationship between the EPO's in vivo and in vitro activity. This understanding is best achieved by comparing the test EPO preparation with the USP Erythropoietin for Bioassays RS in both the in vivo assay and in a specific in vitro assay.

The USP Erythropoietin for Bioassays RS is assigned a unitage that represents its activity in both in vivo assays and in vitro assays. If the ratios of in vitro to in vivo potency for the material being tested and the USP Erythropoietin for Bioassays RS are equivalent, then the USP Erythropoietin for Bioassays RS can be used directly in the in vitro assay to calibrate the material being tested. However, if the ratios are not equivalent, then the material being tested and the USP Erythropoietin for Bioassays RS have a different ratio of in vitro to in vivo potency, and the standard cannot be used with its assigned potency in the in vitro assay. Instead, this ratio determined for the material being tested should be used to assign a process-specific in vitro assay unitage to the USP Erythropoietin for Bioassays RS. The USP Erythropoietin for Bioassays RS, with its adjusted in vitro assay unitage, then can be used in the in vitro assay to transfer the unitage from the USP Erythropoietin for Bioassays RS to the material being tested.

ASSAY

- **Normocythemic Mice Assay**

  Solution A: Dissolve 10.75 g of disodium hydrogen phosphate dodecahydrate, 7.6 g of sodium chloride, and 10 g of bovine albumin in 1000 mL of water. Immediately before use adjust with sodium hydroxide solution or phosphoric acid to a pH of 7.2.

  Standard solution 1: Dissolve USP Erythropoietin for Bioassays RS in *Solution A* to a concentration of 80 IU/mL.

  Standard solution 2: Mix equal volumes of *Solution A* and *Standard solution 1*.

  Standard solution 3: Mix equal volumes of *Solution A* and *Standard solution 2*.

  Sample solution 1: Prepare the sample to be tested in *Solution A* to a concentration of 80 IU/mL.

Sample solution 2: Mix equal volumes of *Solution A* and *Sample solution 1*.
Sample solution 3: Mix equal volumes of *Solution A* and *Sample solution 2*.

The exact concentrations of each *Standard solution* and *Sample solution* may require adjustment based on the response range in the animals used.

Preparation of animals: At the beginning of the assay procedure, randomly distribute mice of a suitable age and strain (8-week-old B6D2F1 mice are suitable) into six cages. A minimum of eight mice per cage is recommended. Inject each animal subcutaneously with 0.5 mL of the appropriate treatment (one solution per cage), and put the animal in a new cage. Combine the mice in such a way that each cage housing the treated mice contains one mouse out of the six different treatments (each *Standard solution* and each *Sample solution*; six mice per cage).

Analysis: Four days after the injections, collect blood samples from the animals, and determine the number of reticulocytes by using a suitable procedure. The following method can be employed.

The volume of blood, dilution procedure, and fluorescent reagent may require modification to ensure maximum development and stability of fluorescence.

For concentrated colorant solution, use a solution of thiazole orange suitable for the determination of reticulocytes. Prepare at a concentration twice that necessary for the analysis.

Proceed with the following dilution steps. Dilute whole blood 500-fold in the buffer used to prepare the colorant solution. Dilute this solution two-fold in the concentrated colorant solution. After staining for 3–10 min, determine the reticulocyte count microfluorometrically in a flow cytometer. The percentage of reticulocytes is determined using a biparametric histogram: number of cells/red fluorescence (620 nm).

Calculate the potency by the usual statistical methods for a parallel-line assay. For additional information, see general chapter *Analysis of Biological Assays* ⟨1034⟩.

Acceptance criteria: The activity of each *Sample solution* is compared with that of the USP Erythropoietin for Bioassays RS and is expressed in IU. The confidence limits of the estimated potency ($P = 0.95$) are NLT 64% and NMT 156% of potency as determined by the method given above. The estimated potency is NLT 80% and NMT 125% of the stated potency.

ADDITIONAL REQUIREMENTS

- **USP Reference Standards ⟨11⟩**
  USP Erythropoietin for Bioassays RS

⟨126⟩ SOMATROPIN BIOIDENTITY TESTS

Somatropin is a protein hormone that contains the same amino acid sequence as the human growth hormone produced by the pituitary gland. A robust and precise physicochemical chromatographic procedure is used in the *Assay* to assign potency on a mass basis. Bioidentity is still required, and two procedure options are presented here: an in vivo bioassay procedure based on somatropin-induced weight gain in rats and a more precise, rat cell line-based approach that measures production of ATP as a direct indicator of cell growth. [Note—The bioidentity test may be performed either on the somatropin bulk drug substance or on the drug product.]

PROCEDURE

- **In Vivo Bioidentity Test**

Buffer solution: 0.1 M ammonium bicarbonate. Adjust with sodium hydroxide to a pH of 8.0.
Standard solutions: 10–100 µg/mL of USP Somatropin RS in *Buffer solution*
Sample solutions: 10–100 µg/mL of Somatropin in *Buffer solution*. [Note—Do not agitate while mixing; swirl gently.]
Control: *Buffer solution*

Test animals: Select an appropriate number of only female or only male Sprague Dawley rats hypophysectomized at 25–30 days of age. After hypophysectomization, feed the rats on rat chow and 5% dextrose water for at least 72 h. After 72 h, feed the rats on rat chow and filtered and deionized water adjusted with 1 N hydrochloric acid to a pH of 3.0 ± 0.25. Weigh the rats when they are 37–44 days old, and retain only healthy rats. Reweigh the remaining rats 7 days later, and use only those rats that are in good health and have not gained or lost more than 10% of their body weight in the previous 7-day period.

Analysis: Randomly divide the rats into control, standard, and test groups, each group containing approximately 10 rats. Each day for 10 days inject subcutaneously 0.1 mL of the *Control, Standard solutions*, and *Sample solutions* to the control, standard, and test groups, respectively. Record the body weight of each animal at the start of the test and at approximately 18 h after the 10th injection.

Calculations: Determine the change in body weight for each rat during the 10-day period, and compute the potency of the *Sample solution* relative to that of the *Standard solution* using appropriate statistical analysis. Calculate the mean potency in USP Somatropin Units/mg and, using appropriate statistical methods, calculate the width, L, of a 95% confidence interval for the estimated base 10 logarithm of the relative potency. If L is more than 0.40, repeat the test until the results from two or more tests, combined by appropriate statistical methods, produce an L of NMT 0.40, corresponding to confidence limits of 63%–158% of the calculated potency.

Acceptance criteria: NLT 2 USP Somatropin Units/mg when *L* is NMT 0.40

- **In Vitro Cell-Based Bioidentity Test**

Medium A: Fischer's medium[1] containing 10% heat-inactivated fetal bovine serum,[2] 10% heat-inactivated horse serum,[3] 1% sodium bicarbonate, and 0.05 mM 2-mercaptoethanol. Filter sterilize. [Note—Store for up to 2 weeks at 2°–8°.]

Medium B: Fischer's medium containing 1% horse serum, 1% sodium bicarbonate, and 0.05 mM 2-mercaptoethanol. Filter sterilize. [Note—Store for up to 2 weeks at 2°–8°.]

Phosphate buffered saline:[4] Calcium- and magnesium-free phosphate buffered saline containing 1.5 mM monobasic potassium phosphate, 155 mM sodium chloride, and 3 mM dibasic sodium phosphate, pH 7.2–7.4

Cell culture preparation: Prepare cell suspension cultures of Nb2-11[5] cells in *Medium A* in a humidified incubator at 37° and containing 5% carbon dioxide. Cells should be passaged twice/week and reseeded at a density of 1×10^5 cells/mL for 2 days, 2×10^4 cells/mL for 3 days, and 1×10^4 cells/mL for 4 days in *Medium A*. [Note—Seeding densities may need adaptation when analysts qualify new lots of fetal bovine serum and horse serum.] On the day of an assay, cells are harvested from flasks and are pelleted by centrifugation for 7 min at about $218 \times g$. The supernatant is discarded, and the cells are washed twice with *Phosphate buffered saline* followed by centrifugation. The cells are resuspended in *Medium B* and are counted, and the cell concentration is adjusted to 1×10^5 cells/mL with *Medium B*. Except for the wells of the first column, transfer 50 µL of cell suspension into each well of a 96-well black tissue culture plate with a clear bottom.[6] Pipet 50 µL of *Medium B* into each well of the first column of the plate. [Note—Cover the plate, and incubate at 37° for up to 1 h while preparing the *Standard solutions* and *Test solutions*.]

Standard solutions: Reconstitute USP Somatropin RS in 1 mL of *Phosphate buffered saline*, and then dilute this material further with *Medium B* to a concentration of 2.0 ng/mL. [Note—Use polypropylene test tubes to make dilutions. For each plate approximately 1 mL of this solution is needed. Do not use single step dilutions of more than 1:100 or smaller transfer volumes than 40 µL.]

Test solutions: For each test solution two results must be obtained by two independent preparations of somatropin. Reconstitute two independent preparations of somatropin in *Water for Injection* to a concentration of 5 mg/mL. Prepare test solutions by diluting this material further with *Medium B* to a concentration of 2.0 ng/mL. [Note—Use polypropylene test tubes to make dilutions. For each plate approximately 1 mL of this solution is needed. Do not use single step dilutions of more than 1:100 or smaller transfer volumes than 40 µL.] One preparation is *Test solution A*, and the other preparation is *Test solution B*.

Positive control solution: Starting with the stock concentration of 5 mg/mL of USP Somatropin RS reconstituted in *Water for Injection*, dilute with *Medium B* to a concentration of 20 ng/mL. [Note—Use polypropylene test tubes to make dilutions. Do not use single step dilutions of more than 1:100 or smaller transfer volumes than 40 µL.]

Procedure: Dispense 100 µL of *Medium B* into each well of a U-bottom, clear 96-well plate,[7] except those wells in column 12 (wells A12–H12 = positive control) and wells A2–A10. [Note—For each black plate seeded with cells as described in *Cell culture preparation*, one separate U-bottom plate is used for preparation of the *Standard solution* and *Test solution* dilutions.] Next, dispense 200 µL of 2.0 ng/mL *Standard solution* into wells A3, A6, and A9 of the dilution plate. Dispense 200 µL of 2.0 ng/mL *Test solution A* into wells A2, A5, and A8 of the dilution plate. Dispense 200 µL of 2.0 ng/mL *Test solution B* into wells A4, A7, and A10 of the dilution plate. Dispense 100 µL of 20 ng/mL *Positive control solution* into the last plate column (wells A12–H12) of the dilution plate. Using a 12-channel pipet, perform serial two-fold dilutions on the plate by aspirating 100 µL from the first row (A2–A10), transfer to the second row, and mix three times. Then aspirate 100 µL from the second row, transfer to the third row, and mix three times, etc. Repeat this procedure across the whole plate up to row H. Discard the 100 µL aspirated from the last row. [Note—The wells of column 11 (wells A11–H11) are negative controls containing 100 µL of *Medium B*; the wells of column 1 (wells A1–H1) are blanks.]

Starting with the lowest concentration and using a 12-channel pipet, transfer 50 µL of each solution in the dilution plate to the respective well of the black plate containing the cells. [Note—During the transfer, immerse the pipet tips into the cell solution. This transfer yields an additional 1:2 dilution of somatropin, or a final concentration of 1.0 ng/mL for the highest dose added to the cells and 10 ng/mL for the *Positive control solution*. A plate layout is shown in *Table 1*.] Following all transfers, gently agitate the black plate for 30 s, and then incubate it in a humidified 37° incubator containing 5% carbon dioxide for 30 ± 2 h. Next, add 100 µL of reconstituted luminescent substrate solution[8] to all wells. Incubate the plates for 15 min at room temperature while gently agitating the plates on an appropriate plate shaker, protected from light. Incubate the plates for an additional 15 min at room temperature without shaking, protected from light. Read the luminescence from the plate wells in a suitable plate reader with a luminescence detection mode.

[1] Quality Biological, catalog #112-032-101, or equivalent.
[2] Gibco, catalog #10082-147, or equivalent.
[3] Gibco, catalog #26050-088, or equivalent.
[4] Amimed catalog #8-05F29I, Gibco catalog #20012-019, or equivalent.
[5] HPA Culture Collections or Sigma-Aldrich catalog #97041101.
[6] Costar catalog #3904, or equivalent.
[7] Greiner #650 160 plate or equivalent.
[8] CellTiterGlo-Luminescence Kit, e.g., Promega #G7573, or equivalent.

Table 1. Schematic Representation of the Final Assay Plate

	1	2	3	4	5	6	7	8	9	10	11	12
A	BL	A,#1	St,#1	B,#1	A,#1	St,#1	B,#1	A,#1	St,#1	B,#1	NEG	POS
B	BL	A,#2	St,#2	B,#2	A,#2	St,#2	B,#2	A,#2	St,#2	B,#2	NEG	POS
C	BL	A,#3	St,#3	B,#3	A,#3	St,#3	B,#3	A,#3	St,#3	B,#3	NEG	POS
D	BL	A,#4	St,#4	B,#4	A,#4	St,#4	B,#4	A,#4	St,#4	B,#4	NEG	POS
E	BL	A,#5	St,#5	B,#5	A,#5	St,#5	B,#5	A,#5	St,#5	B,#5	NEG	POS
F	BL	A,#6	St,#6	B,#6	A,#6	St,#6	B,#6	A,#6	St,#6	B,#6	NEG	POS
G	BL	A,#7	St,#7	B,#7	A,#7	St,#7	B,#7	A,#7	St,#7	B,#7	NEG	POS
H	BL	A,#8	St,#8	B,#8	A,#8	St,#8	B,#8	A,#8	St,#8	B,#8	NEG	POS

LEGEND:
BL = Blank: no somatropin, no cells.
A = Dilution series of *Test solution A* (with 1.0 ng/mL as starting concentration).
St = Dilution series of *Standard solution* (with 1.0 ng/mL as starting concentration).
B = Dilution series of *Test solution B* (with 1.0 ng/mL as starting concentration).
NEG = Negative control: no somatropin, but cells are present.
POS = *Positive control solution:* maximum somatropin concentration (10 ng/mL).

Calculations: A minimum of two independent *Test solution* preparations must be used for each test sample. The *Test solutions* and *Standard solutions* are normalized by protein content before calculation of the relative potency. [NOTE—One mg of anhydrous somatropin is equivalent to 3.0 USP Somatropin Units.] Technical outliers (but NMT 4/curve) are omitted, and then the same number of *Standard solution* and *Test solution* dose responses, including the 50% response (EC_{50}) of the standard/test sample within this range, are used to calculate the relative potency of each somatropin sample using statistical methods for parallel-line analysis. For each individual *Test solution* compared to the *Standard solution,* the statistical tests for linearity, slope, and parallelism must pass at the 95% level. The confidence limit for each calculated relative potency must be within 75%–133%. The relative potency of a *Test solution* must be within the validated assay range (50%–200% relative potency) of the *Standard solutions.* The unweighted mean log relative potency is calculated from valid individual samples, and the potency is then calculated in USP Units/mg relative to the USP Somatropin RS.

System suitability criteria: The signal-to-noise ratio of the mean chemiluminescence signal of the *Positive control solution* to the mean chemiluminescence signal of the negative control wells must be NLT 3. NMT 4 technical outliers may be omitted per standard curve. Any plate that fails one or more of these criteria is rejected and must be repeated.

Acceptance criteria: NLT 2 USP Somatropin Units/mg

• **USP REFERENCE STANDARDS 〈11〉**
USP Somatropin RS

Add the following:

▲〈127〉 FLOW CYTOMETRIC ENUMERATION OF CD34+ CELLS

INTRODUCTION

The CD34 antigen is expressed on the surface of almost all human hematopoietic stem and progenitor cells. The absolute number of CD34+ hematopoietic stem cells (HSCs) has been shown to correlate with in vitro colony-forming unit (CFU) assay activity and with clinical engraftment in hematopoietic grafts prepared from peripheral blood, bone marrow, and cord blood sources. The single-platform, flow cytometric CD34+ cell enumeration method described here is based on a clinical laboratory protocol,[1] established by the International Society of Hematotherapy and Graft Engineering (ISHAGE), now known as the International Society for Cellular Therapy (ISCT). This protocol can be used to enumerate CD34+ cells in samples of peripheral blood, leukapheresis products, bone marrow, and cord blood. CD34+ cell enumeration by flow cytometry is a rare event analysis, which requires specific gating instructions that are provided in this chapter. Furthermore, the USP CD34+ Cell Enumeration System Suitability RS has been developed to assess the reagents and ensure the correct gating during data acquisition and analysis.

[1] Sutherland DR, Keeney M, Gratama JW. Enumeration of CD34+ hematopoietic stem and progenitor cells. *Curr Protoc Cytom.* 2003;6:6.4.1–6.4.24.

IDENTIFICATION OF CD34+ HEMATOPOIETIC STEM CELLS

CD34+ cell enumeration by flow cytometry is a rare event analysis. For the analysis of CD34+ HSCs, cell samples are stained with fluorescently labeled antibodies against both the HSC antigen CD34 and the pan-leukocyte antigen CD45. Five parameters—forward light scatter (FSC), side light scatter (SSC), CD34 staining, CD45 staining, and viability dye staining are combined in a sequential, or Boolean, gating strategy to identify viable CD34+ cells.

CD34+ HSCs have FSC and SSC characteristics similar to lymphocytes; expressing both CD45 and CD34, and exhibiting dim CD45 expression and low SSC characteristics. Viability dye does not stain live cells, allowing the exclusion of dead cells from the analysis of viable cell preparations. For analysis of nonviable, fixed (preserved) cell preparations such as the USP CD34+ Cell Enumeration System Suitability Reference Standard (RS), either the flow cytometer viable cell analysis gate is fully opened to include all cells, or the *Viability dye* is omitted from the analysis.

ENUMERATION CONSIDERATIONS

The CD34+ cell enumeration method described here relies on the use of synthetic fluorescent microspheres (counting beads) as internal enumeration controls. Homogeneous counting beads are added to the cell sample at a known concentration and volume, or the counting beads may be procured, pre-aliquoted, and lyophilized in special sample tubes, in which all subsequent cell staining and processing steps are conducted. To avoid the loss of counting beads, the wash steps are omitted, and protein-containing sample buffers are used. An ammonium chloride-based, red blood cell (RBC)-lysing protocol is used for fresh cell preparations; no lysing is necessary for frozen, thawed, or fixed cell preparations.

After the cells are stained and processed, the counting beads and cells are simultaneously analyzed on a flow cytometer. The number of CD34+ cells/µL in the cell sample can be directly calculated by comparing the absolute number of target CD34+ cells and the number of counting beads detected in the same data file. The USP CD34+ Cell Enumeration System Suitability RS is used to verify that the correct reagents and flow cytometer gating parameters were used.

EQUIPMENT SPECIFICATIONS

The following equipment is needed:

- A pipettor capable of accurately reverse-pipetting microliter volumes
- A flow cytometer with the following minimum specifications (see *Flow Cytometry* ⟨1027⟩):
  - Detection capabilities for FSC; SSC; "green" fluorescence emission (range, 510–550 nm); "yellow" fluorescence emission (range, 560–590 nm); and "red" fluorescence emission (>600 nm)
  - Light-scatter and fluorescence measurements that are correlated to time
  - Light-scatter resolution allowing for the identification of lymphocytes, monocytes, granulocytes, and fluorescent counting beads
  - Detection and data acquisition rates of at least 5000 cells/s
  - A 488-nm laser excitation source
  - Fluorescence intensity sensitivity allowing for the detection of cellular autofluorescence
  - Analysis software, including a data file structure in the Flow Cytometry Standard (FCS) or equivalent, with spectral overlap correction capability

FLOW CYTOMETER INSTRUMENT SETUP AND CONSIDERATIONS

NOTE—For general information, see ⟨1027⟩ and the flow cytometer manufacture's recommendations.

Ensure that the sheath fluid receptacle is filled, the waste fluid receptacle is empty, and all caps are tightly closed. Verify that the laser power, system vacuum, and pressure are properly set.

Using fluorochrome-conjugated calibration microspheres, verify proper system alignment by measuring the average detection rate, mean fluorescence, mean FSC, mean SSC, and the respective calculated coefficient of variance (CV) values as measured by each detector. All values should fall within the ranges recommended by the manufacturer of the flow cytometer instrument. Adjust the detector threshold to ensure that all counting bead events are included.

Use either antibody-binding microspheres or preserved cells, such as the USP CD34+ Cell Enumeration System Suitability RS, to establish a matrix of detector values while adjusting for spectral overlap (compensation). Note that although either microspheres or cells can be stained with anti-CD34 phycoerythrin (PE) and anti-CD45 fluorescein isothiocyanate (FITC) antibodies, only fresh cells can be stained with *Viability dye*.

REAGENTS

Phosphate-buffered saline (PBS): 138 mM sodium chloride, 2.7 mM potassium chloride, 8 mM dibasic sodium phosphate, and 1.47 mM monobasic potassium phosphate. [NOTE—pH 7.0–7.4. If needed, adjust pH with hydrochloric acid.]
Dilution buffer: 1% (w/v) bovine serum albumin or human serum albumin in *PBS*

General Chapters

10X Stock ammonium chloride RBC lysis buffer: 1.5 M ammonium chloride, 0.01 M sodium bicarbonate, and 0.01 M ethylenediaminetetraacetic acid (EDTA)[2]
Diluted (1X) RBC lysis buffer: *10X Stock ammonium chloride RBC lysis buffer* diluted 1:10 with water
Anti-CD34 PE: PE-conjugated mouse IgG1 anti-human CD34 antibody (clones QBEnd10, 8G12, 581, Birma K3, or equivalent class II or class III PE-conjugated anti-CD34 antibodies), appropriately titrated
Anti-CD45 FITC: FITC-conjugated mouse IgG1 anti-human CD45 antibody (clones J33, T29/33, or HLE-1 or equivalent FITC-conjugated anti-CD45 antibodies), appropriately titrated
Viability dye: 1 µg/mL of 7-aminoactinomycin D (7-AAD) or equivalent, freshly diluted from a stock solution of 100 µg/mL[3]
Instrument calibration beads: Fluorochrome-conjugated instrument calibration microspheres[4]
Suspended counting beads: Fluorochrome-conjugated counting beads, formulated in liquid suspension[5]
Lyophilized counting bead tube: Fluorochrome-conjugated counting beads, formulated and lyophilized in a counting tube[6]
System suitability standard USP CD34+ Cell Enumeration System Suitability RS: Reconstitute the entire vial of USP CD34+ Cell Enumeration System Suitability RS with 0.5 mL of distilled water.
Cell samples: Fresh, fixed, or cryopreserved and thawed cell suspensions containing CD34+ cells, with a minimum of 100,000 nucleated cells/sample. Cell samples may include peripheral blood, leukapheresis product, cord blood, or bone marrow.

SAMPLE PREPARATION

Use reverse-pipetting techniques for all sample dilutions and transfers. Dilute *Cell samples* with *Dilution buffer* to obtain a total nucleated cell concentration of 10–30 × 10^6 cells/mL. Add *Anti-CD45 FITC* and *Anti-CD34 PE* to a 12-mm × 75-mm polystyrene tube (or a *Lyophilized counting bead tube*), followed by *Viability dye* to a final concentration of 1 µg/mL. Add 100 µL of well-mixed *Cell samples* to the bottom of the tube, and mix. Incubate for 20 min protected from light. Add 2 mL of *Diluted (1X) RBC lysis buffer* to fresh samples or add 2 mL of *Dilution buffer* to a fixed or frozen and thawed sample; vortex to mix. For fresh *Cell samples*, incubate for 10 min protected from light; for fixed or frozen then thawed *Cell samples*, no incubation time is needed. Place samples on ice. Samples should be analyzed within 1 h of lysis.

Immediately before acquiring data on the flow cytometer, pipet 100 µL of well-mixed *Suspended counting beads* (if not using *Lyophilized counting bead tubes*) to the prepared *Cell samples* described above. Cap the tube, and gently mix by inversion. Do not add counting beads to *Cell samples* intended to be used for adjustment of the instrumentation compensation matrix.

Immediately proceed to flow acquisition to collect a minimum of 75,000 CD45+ events and a minimum of 100 CD34+ cells. Acquire and analyze data by creating regions and logical gates (manually, or by using software appropriate for the flow cytometer), as described in *Table 1*.

System Suitability Requirements

Use the USP CD34+ Cell Enumeration System Suitability RS to verify that the gating strategy described below allows the detection and quantitation of CD34+ HSCs. Note that for fixed *Cell samples*, the viability gate (*R1* in *Table 1*) must be opened to include all events; alternatively, the *Viability dye* can be omitted. Calculate the number of CD34+ HSCs/µL in USP CD34+ Cell Enumeration System Suitability RS.

Acceptance Criteria

The results should fall within the range provided in the USP CD34+ Cell Enumeration System Suitability RS certificate.

DATA ACQUISITION AND ANALYSIS

For flow acquisition, collect a minimum of 75,000 CD45+ events and a minimum of 100 CD34+ cells. Acquire and analyze data by creating regions and logical gates (manually, or using software appropriate for the flow cytometer) as described in *Table 1*. The best results are obtained when cell and bead data (events) are displayed as bivariate dot plots. *Table 1* contains representative dot plots and gating strategies for fresh cell samples. Dot plot displays may vary depending on the cell sample, flow cytometer, and software used. Troubleshooting guidelines can be found in *Table 2*.

---

[2] A suitable fixative-free RBC lysis reagent can be obtained from BD Biosciences: BD Pharm Lyse™ Lysing Buffer Catalog No. 555899, BD Ammonium Chloride Lysing Solution (10X) Catalog No 344563, or equivalent.
[3] Suitable reagents can be obtained from BD Biosciences as part of a kit, Catalog No. 344563, or BD Biosciences Catalog No. 555899, or equivalent.
[4] A suitable reagent can be obtained from BD Biosciences: Catalog No. 641319, or equivalent.
[5] Suitable reagents can be obtained from Dako: Catalog No. K2370 (in a kit) or Dako Catalog No. S2366, or equivalent.
[6] A suitable reagent can be obtained from BD Biosciences: Catalog No. 340334.

Table 1. Dot Plot Descriptions and Gating Instructions

Step	Format	Purpose	Gating Instructions	Representative Dot Plots and Gating Strategies
1	SSC (linear) vs. *Viability dye* fluorescence (log)	Define viable cells	• Display all unselected events. Create region *R1* around events with little-to-no fluorescence. • Included in the region *R1*: viable cells, debris. • Excluded from the region *R1*: dead and dying cells, counting beads.	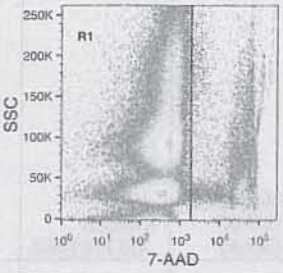
2	SSC (linear) vs. CD45 fluorescence (log)	Define viable CD45+ leukocytes and lymphocytes	• Display *R1*-selected events. Create region *R2* around events with CD45+ fluorescence, excluding debris (i.e., events with very low SSC). Within *R2*, create region *R3* around events with high CD45+ fluorescence and low SSC. • Included in the region *R2*: viable CD45+ leukocytes. • Included in the region *R3*: viable lymphocytes. • Excluded from the region *R2*: cell debris, platelets, and unlysed RBCs. • Excluded from the region *R3*: granulocytes, monocytes, and other non-lymphocytes.	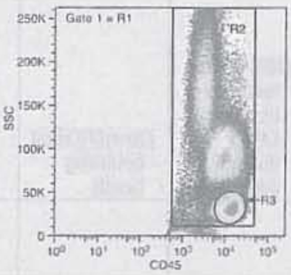
3	SSC (linear) vs. CD34 fluorescence (log)	Define viable CD34+ cells	• Display *R2*-selected events. Create region *R4* around events with CD34+ fluorescence and low SSC. • Included in the region *R4*: viable CD34+ cells. • Excluded from the region *R4*: CD34- cells.	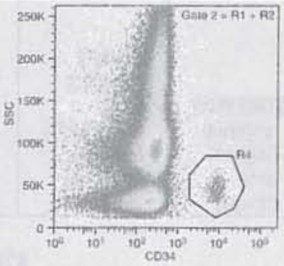
4	SSC (linear) vs. FSC (linear)	Define lymphocytes and blasts	• Display *R3*-selected events. Create region *R5* to exclude debris (low SSC and low FSC). • Included in the region *R5*: viable lymphocytes and blasts. • Excluded from the region *R5*: small debris and events with high SSC values.	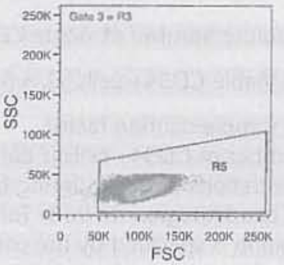
5	SSC (linear) vs. CD45 fluorescence (log)	Define CD45 dim CD34+ cells	• Display *R4*-selected events. Create region *R6* around events with low-to-intermediate SSC and intermediate CD45 expression. • Included in the region *R6*: viable CD34+ HSCs. • Excluded from the region *R6*: cells that express high levels of CD45.	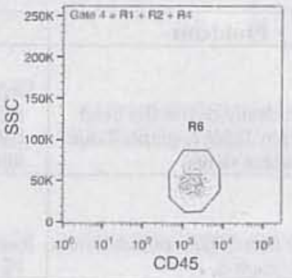

Table 1. Dot Plot Descriptions and Gating Instructions *(Continued)*

Step	Format	Purpose	Gating Instructions	Representative Dot Plots and Gating Strategies
6	SSC (linear) vs. FSC (linear)	Confirm CD34+ HSCs	• Display *R6*-selected events, and paste a copy of the *R5* gate parameters into the plot. Events in *R5* have light-scatter characteristics similar to lymphocytes and blasts, confirming the identity of the events as CD34+ HSCs. • Included in the region *R5*: confirmed viable CD34+ HSCs. • Excluded from the region *R5*: debris and other irrelevant events.	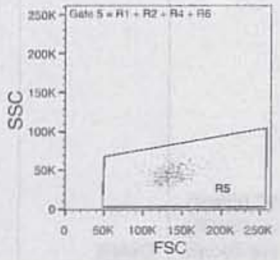
7	CD34 fluorescence (log) vs. CD45 fluorescence (log)	Quantify total counting beads	• Display all ungated events. Create region *R7* around events with both high CD34+ and high CD45+ fluorescence. • Included in the region *R7*: total counting beads. • Excluded from the region *R7*: cells and debris.	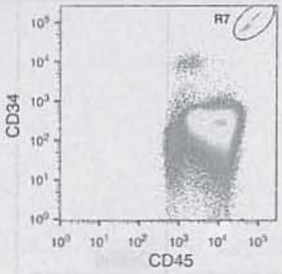
8	CD45 fluorescence (log) vs. time (linear)	Quantify "singlet" (e.g., unaggregated) counting beads	• When recommended by the counting bead manufacturer, display *R7*-selected events. Create *R8* around events with lower fluorescence intensity. • Included in the region *R8*: singlet counting beads. • Excluded from the region *R8*: counting bead aggregates.	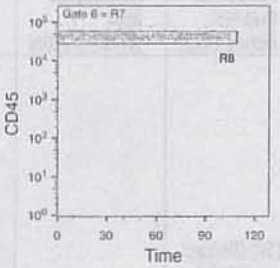

CALCULATION OF ABSOLUTE CD34 NUMBER

The absolute number of viable CD34+ cells/μL is calculated as follows:

$$\text{Viable CD34+ cells}/\mu\text{L} = (\text{number of CD34+ cells})/(\text{number of counting beads}) \times (\text{bead concentration} \times DF)$$

DF = sample dilution factor

The number of CD34+ cells is determined from the viable CD34+ cells (region *R5* from *Table 1*, Step 6). Depending on the recommendations of the counting bead manufacturer, the number of counting beads is determined from either the total counting beads (region *R7* from *Table 1*, graph 7) or the singlet counting beads (region *R8* from *Table 1*, graph 8). The bead concentration is specified by the counting bead manufacturer.

Table 2. Troubleshooting Guidelines (see also ⟨1027⟩)

Problems	Possible Reasons	Solutions	Comments
Unable to clearly define the bead gate (*R7*) in *Table 1*, graph 7 due to fluorescent debris	Degraded fresh cell sample; fixed sample; too many platelets; incomplete RBC lysis; nucleated RBCs (e.g., in cord blood)	Use a far-red fluorescence channel (>600 nm), instead of FITC, to gate counting beads.	Counting beads are highly fluorescent in all channels. Autofluorescence interference decreases dramatically at longer wavelengths (>600 nm).
Unable to find CD34+ population in *Table 1*, graph 3	Incorrect compensation settings for PE and *Viability dye*	Repeat the spectral compensation setup procedure, and adjust settings accordingly.	Make sure that counting beads are not in the compensation matrix sample, because they can interfere with compensation settings.
Unsure of gating for singlet or total beads	High levels of counting bead aggregates	Follow the counting bead manufacturer's recommendation for including or excluding aggregates.	Counting bead concentration calculations will vary by manufacturer.

Table 2. Troubleshooting Guidelines (see also ⟨1027⟩) *(Continued)*

Problems	Possible Reasons	Solutions	Comments
Want to use a different CD34 antibody clone	Multi-parametric flow cytometry considerations	Alternative antibody clones must be carefully validated against the specified CD34 antibodies. Choose a class II or class III antibody that detects all CD34 isoforms and glycoforms.	Class I antibodies do not detect all CD34 glycoforms.
Want to use a different CD45 antibody clone	Multi-parametric flow cytometry considerations	Alternative antibody clones must be carefully validated against the specified CD45 antibodies. Choose an antibody that detects all isoforms and all glycoforms of CD45.	

ADDITIONAL REQUIREMENTS

USP Reference Standards ⟨11⟩

USP CD34+ Cell Enumeration System Suitability RS

▲USP40

⟨129⟩ ANALYTICAL PROCEDURES FOR RECOMBINANT THERAPEUTIC MONOCLONAL ANTIBODIES

INTRODUCTION

This chapter provides analytical procedures for murine, chimeric, and humanized IgG isotype monoclonal antibodies and subtypes (e.g., IgG1 and IgG2). Subclasses show differences in amino acid sequence and in the number of disulfide bonds, and in some cases they require subclass-specific analysis. This chapter applies to monoclonal antibodies for therapeutic and prophylactic use and for use as in vivo diagnostics. It does not apply to monoclonal antibodies used as reagents in the manufacture of medicinal products, for which applicable requirements are determined by the appropriate regulatory agency.

Naturally occurring polyclonal antibodies in serum or plasma can bind to many different targets as part of the immune system. In contrast, therapeutic monoclonal antibodies for human use are preparations of an immunoglobulin (or a fragment of an immunoglobulin) that have specificity for a target and are derived from a single clone of cells. Therapeutic monoclonal antibodies can bind to and neutralize soluble antigens, and their mechanism of action (MOA) often involves blocking of the ligand from binding to its cognate receptor. Alternatively, therapeutic monoclonal antibodies can recognize and bind to cell-bound antigens and in these cases may also engage the immune system through Fc (crystallizable fragment) mediated effector functions as part of their MOA. Monoclonal antibodies that have a single defined binding specificity are monospecific, whereas recombinantly engineered bispecific monoclonal antibodies can bind to two different targets (e.g., antigens). IgG-type monoclonal antibodies have a molecular weight of approximately 150 kD. Each molecule consists of two heavy and two light polypeptide chains that have a molecular weight of approximately 50 and 25 kD, respectively. Antibodies can be schematically represented as a Y joined by disulfide bridges, where each arm of the Y is called the Fab domain, and the stem of the Y is called the Fc domain. Monoclonal antibodies are glycoproteins that have a glycosylation site in the Fc portion located on each of the heavy chains and have possible additional glycosylation sites in the Fab domain, depending on the molecule.

The specificity of a monoclonal antibody is based on its antigen binding site, which is located in the Fab part of the molecule. The Fc domain contains receptor binding sites that are associated with antibody effector functions that have subclass-specific applications such as antibody-dependent cellular cytotoxicity and complement-dependent cytotoxicity. Pharmacokinetic effects via binding to the neonatal Fc receptor also are present in this domain.

Monoclonal antibodies are produced in cell culture using a seed lot system with master and working cell banks. After harvest, purification steps ensure that product- and process-related impurities are reduced to an acceptable level.

Currently licensed monoclonal antibody therapeutics include those involved in the activation of effector cells, cell killing, cross-linked induced apoptosis, antagonism against several targets, and agonist antibodies.

This chapter includes purity assessments by size-exclusion chromatography (SE-HPLC), capillary electrophoresis, and analysis of oligosaccharides, and it provides validated procedures for each of these.

Although this chapter is focused on IgG-type monoclonal antibodies, the principles of the tests included can apply to other related molecules, such as IgM or other isotype antibodies, antibody fragments, and Fc-fusion proteins. When the active substance is a conjugated antibody, such tests can be performed on the purified antibody before modification or conjugation.

Alternative methods and/or procedures may be used if they provide advantages in terms of accuracy, sensitivity, precision, selectivity, or adaptability to automation or computerized data reduction, or in other special circumstances. Such alternative procedures and methods shall be validated as described in *Validation of Compendial Procedures* ⟨1225⟩ and must be shown to give equivalent or better results.

- **SIZE-EXCLUSION CHROMATOGRAPHY**

Although SE-HPLC is robust for measuring monomer and high-molecular-weight species (HMWS, aggregates), the quantitation of low-molecular-weight species (LMWS, fragments) can be highly variable depending on the mAb studied. The measurement of LMWS is better quantitated by capillary electrophoresis sodium dodecyl sulfate (CE-SDS).

Mobile phase: Prepare by mixing 10.5 g of dibasic potassium phosphate, 19.1 g of monobasic potassium phosphate, and 18.6 g of potassium chloride per L of water. Verify that the pH is 6.2 ± 0.1. Pass through a membrane filter of ≤ 0.45-µm or smaller pore size.

System suitability solution: Prepare a 10-mg/mL USP Monoclonal IgG System Suitability RS solution in *Mobile phase* by reconstituting the contents of one vial with 200 µL of *Mobile phase*. Reconstituted *System suitability solution* should be used within 24 h after reconstitution, and should be stored at 2°–8° if not used immediately.

System suitability blank: Use *Mobile phase*.

Sample solution: Dilute the sample to 10 mg/mL in *Mobile phase* if dilution is required. Similarly, a blank should be prepared using an equivalent dilution of formulation buffer in *Mobile phase*.

Chromatographic system

(See *Chromatography* ⟨621⟩, *System Suitability*.)

Mode: LC

Detector: UV 280 nm

Column: 7.8-mm × 30-cm; 5-µm packing L59

Temperatures

Column: Ambient

Autosampler: Maintain at 2°–8°

Flow rate: 0.5 mL/min

Injection volume: 20 µL

Run time: 30 min

System suitability

Sample: *System suitability solution*

[NOTE—Approximate retention times for polymer, dimer, monomer, and LMWS are 12, 15, 18, and 22 min, respectively.]

Suitability requirements

Chromatogram: The chromatogram of the *System suitability solution* is consistent with the typical chromatogram as illustrated in the USP Certificate for USP Monoclonal IgG System Suitability RS.

Chromatogram similarity: The chromatographic profiles of *System suitability solution* injections that bracket injections of *Sample solutions* in a sample set are consistent with each other and with the typical chromatographic profile as illustrated in the USP Certificate for USP Monoclonal IgG System Suitability RS. All named peaks in the typical chromatogram must be present, be well-resolved, and in the same elution order as that in the *System suitability solution* chromatograms.

Quantitative criteria: Bracketing *System suitability solution* injections must meet the following quantitative criteria:

The percent peak area of the HMWS in the *System suitability solution* must be 0.4%–0.67%.

The percent peak area of the main peak in the *System suitability solution* must be 99.1%–99.6%.

The percent peak area of the LMWS in the *System suitability solution* must be NMT 0.2%.

Analysis

Samples: *Blank*, *System suitability solution*, and *Sample solution*

Injections of the *Sample solution* should be bracketed minimally with single injections of the *System suitability solution*. An injection of a *Blank* should be included as the final injection before the final *System suitability solution* injection.

Calculations: Using a suitable electronic integrator or computer system, analyze the bracketing *System suitability solution* injections. Exclude from integration any peaks that are present in the *Blank*. Protein-related peaks that elute before the main peak are classified as HMWS; those that elute after the main peak are classified as LMWS. Report the percentage of peak areas for the HMWS, main peak, and LMWS.

- **CAPILLARY SDS ELECTROPHORESIS (REDUCED AND NONREDUCED)**

Capillary sodium dodecyl sulfate (CE-SDS) electrophoresis is a sensitive, analytical method for quantitative estimation of product-related impurities such as nonglycosylated molecules, half antibodies, and fragments, and thus is also useful as a stability-indicating assay. After denaturation with SDS, the method allows the analysis of the complete antibody under nonreducing conditions, and the analysis of light and heavy chains (LC and HC, respectively) under reducing conditions.

[NOTE—Slight variations in sample preparation may be necessary depending on the stability of the individual antibody. If 15 min incubation at 70° leads to fragmentation or cleavage of disulfide bonds for a particular antibody sample, adjust the incubation time accordingly.]

SDS sample buffer: Prepare a solution containing 100 mM tris-hydrochloride (tris-HCl), a pH of 8.95 ± 0.05, and 1% (w/w) SDS.

SDS gel buffer: Buffer at a pH of 8.0 containing 0.2% (w/w) SDS and an appropriate hydrophilic polymer acting as a molecular sieve[1]

Alkylation solution: 250 mM iodoacetamide in water prepared immediately before use

System suitability solution: Reconstitute 1 vial of USP Monoclonal IgG System Suitability RS with 0.5 mL of *Water for Injection* (WFI) to a final concentration of 4 mg/mL.

Internal standard solution: 5 mg/mL of 10 kDa internal standard[2] in water containing 0.5% (w/w) SDS and 0.2% (w/v) sodium azide

Nonreduced system suitability solution: Mix 25 µL of the *System suitability solution* with 4 µL of *Internal standard solution*. Mix 66 µL of *SDS sample buffer* with 5 µL of the *Alkylation solution*. Add the *SDS sample buffer* and *Alkylation solution* mixture to the *System suitability solution* and *Internal standard solution* mixture. Mix thoroughly, and heat the mixture at 70° for 15 min. Allow to cool for 3 min at room temperature, centrifuge at 300 × g for 1 min, and transfer 100 µL into autosampler vials.

Reduced system suitability solution: Mix 25 µL of the *System suitability solution* with 66 µL of *SDS sample buffer*. Add 4 µL of *Internal standard solution* and 5 µL of neat β-mercaptoethanol. Mix thoroughly, and heat the mixture at 70° for 15 min. Allow to cool for 3 min at room temperature, centrifuge at 300 × g for 1 min, and transfer 100 µL into autosampler vials.

Blank solution: Mix 45 µL of water with 50 µL of *SDS sample buffer*. Add 4 µL of *Internal standard solution* and 5 µL of neat β-mercaptoethanol for the reduced conditions or 5 µL of *Alkylation solution* for the nonreducing conditions. Mix thoroughly, and heat the mixture at 70° for 15 min. Allow to cool for 3 min at room temperature, centrifuge at 300 × g for 1 min, and transfer 100 µL into autosampler vials.

Nonreduced sample solution: Dilute 100 µg of the sample to be tested with 50–95 µL of *SDS sample buffer* to give a final volume of 95 µL. Add 4 µL of *Internal standard solution* and 5 µL of the *Alkylation solution*. Mix thoroughly, and heat the mixture at 70° for 15 min. Allow to cool for 3 min at room temperature, centrifuge at 300 × g for 1 min, and transfer 100 µL into autosampler vials.

Reduced sample solution: Dilute 100 µg of the sample to be tested with 50–95 µL of *SDS sample buffer* to give a final volume of 95 µL. Add 4 µL of *Internal standard solution* and 5 µL of neat β-mercaptoethanol. Mix thoroughly, and heat the mixture at 70° for 15 min. Allow to cool for 3 min at room temperature, centrifuge at 300 × g for 1 min, and transfer 100 µL into autosampler vials.

Instrumental conditions

Mode: CE-SDS

Detector: UV or diode array 220 nm

Capillary: Fused-silica capillary (i.d. 50 µm) cut to a total length of 30 cm with an effective length of 20 cm.[3] The following preconditioning and prefilling steps are required between each run.

Preconditioning of the capillary: Rinse for 3 min at 70 psi with 0.1 N sodium hydroxide followed by 0.1 N hydrochloric acid for 1 min at 70 psi, and water for 1 min at 70 psi.

Prefilling of capillary: Rinse for 10 min at 70 psi with *SDS gel buffer*.

Sample injection: Electrokinetic injection, 5.0 kV reversed polarity for 20 s

Voltage separation

Nonreduced conditions: Run time 40 min at 15 kV, reversed polarity

Reduced conditions: Run time 40 min at 15 kV, reversed polarity

Temperatures

Sample storage: Approximately 25°

Capillary: Approximately 25°

System suitability

Suitability requirements for reducing conditions

Sample: *Reduced system suitability solution*

Electropherogram: The electropherogram of the *Reduced system suitability solution* is consistent with the typical electropherogram illustrated in the USP Certificate for USP Monoclonal IgG System Suitability RS.

Resolution: The main peak of the heavy chain and the peak of the nonglycosylated heavy chain can be clearly identified. The resolution between the nonglycosylated heavy chain and the intact heavy chain is NLT 1.2.

Ratio of nonglycosylated to total heavy chain: Use time-corrected peak areas (see *Capillary Electrophoresis* ⟨1053⟩, *Quantification*, which may be a helpful, but not mandatory resource) for calculation. Calculate the ratio of nonglycosylated to total heavy chain by dividing the relative amount of nonglycosylated heavy chain by the sum of all heavy chains, and multiply by 100. The ratio of nonglycosylated to total heavy chain in the *System suitability solution* should be within the limits of 0.75%–1.34%.

Suitability requirements for nonreducing conditions

Sample: *Nonreduced system suitability solution*

[1] Available from Beckman Coulter as a component of test kit, catalog number A10663, or a suitable equivalent.
[2] Available from Beckman Coulter as a component of test kit, catalog number A10663, or a suitable equivalent.
[3] Beckman Coulter catalog number 338472 or equivalent.

General Chapters

Electropherogram: The electropherogram of the *Nonreduced system suitability solution* is consistent with the typical electropherogram illustrated in the USP Certificate for USP Monoclonal IgG System Suitability RS.

Resolution: The IgG main peak can be clearly identified. The resolution between the IgG main peak and Fragment 1 (F1) is NLT 1.3.

Amount of main peak: Calculate the relative amount of the main peak by dividing the sum of the time-corrected peak area of the main IgG peaks by the sum of all time-corrected peak areas excluding internal standard peaks and all system peaks, and multiply by 100. The relative amount of the main IgG peak of the *System suitability solution* should be within the limits of 61.4%–86.4%.

Relative standard deviation: NMT 2% for the migration of the internal standard in the bracketing *Blank solution.* No other peaks migrating after the internal standard are detectable.

Analysis

Samples: *Blank solution, System suitability solution*, and *Sample solution*

[NOTE—Based on instrument requirements, the field applied across the capillary and the conditions for the sample injection may be adjusted to achieve *System suitability*.] Apply a field strength of 500 V/cm (reversed polarity) for 40 min, using the *SDS gel buffer* as the electrolyte in both buffer reservoirs. Electrophorese the samples, using a 20-s reversed polarity and electrokinetic injection at 5.0 kV, into the anodic end of the capillary, and record the electropherograms at 220 nm. Rinse for 3 min at 70 psi with 0.1 N sodium hydroxide followed by 0.1 N hydrochloric acid for 1 min at 70 psi, and water for 1 min at 70 psi. Inject at least in duplicate.

Calculate the time-corrected peak areas of all peaks migrating after the internal standard peak.

Reduced conditions: Calculate the relative amount of product peak by dividing the sum of the time-corrected peak areas of heavy chain, nonglycosylated heavy chain, and light chain by the sum of all time-corrected peak areas for peaks appearing after the internal standard, and multiply by 100.

Nonreduced conditions: Calculate the relative amount of product peak by dividing the sum of the time-corrected peak area of the main IgG peak by the sum of all time-corrected peak areas for peaks appearing after the internal standard, and multiply by 100.

• OLIGOSACCHARIDE ANALYSIS—ANALYSIS OF *N*-LINKED OLIGOSACCHARIDES OF MONOCLONAL ANTIBODIES

The inclusion of oligosaccharide analysis in a specification for a monoclonal antibody drug substance should be assessed using science- and risk-based approaches and should be defined on a product-specific basis. If applicable, one or more of the following analytical approaches can be employed for oligosaccharide profiling or quantitation of individual structures. Other validated methods that are suitable for determination of *N*-linked glycosylation utilizing different modes of separation, labeling, or detection can be used. [NOTE—For monoclonal antibodies with both Fc and Fab *N*-linked oligosaccharides, additional sample preparation procedures (e.g., treatment with the enzyme papain) can be employed to separate the domains before analyses so that information at individual glycosylation sites can be obtained. All additional sample preparation steps for the method require validation.]

[NOTE—Numerical acceptance criteria may be defined for individual glycan structures. If applicable, acceptance criteria must be derived from product-specific information taking into consideration a suitable range of historical batch data.]

Method A: Capillary electrophoresis with laser-induced fluorescence detection

Run buffer: Prepare 100 mM triethanolamine (TEA) and 10% glycerol at pH 7.5 by dissolving 1.492 g of TEA and 10 g of glycerol in 80 mL of water. Adjust with 1 N hydrochloric acid to a pH of 7.5, and dilute with water to a final volume of 100 mL.

Sample buffer: Dilute 1 mL of *Run buffer* with 9 mL of water.

Enzyme reaction buffer: Prepare 50 mM sodium phosphate, pH 7.5.

APTS labeling reagent: Dissolve 5 mg of 8-aminopyrene-1,3,6-trisulfonate (APTS) in 48 µL of 15% acetic acid, and mix.

Sample solution: Add 2 µL of peptide *N*-glycosidase F (PNGase F) (5 units/mL) to 50 µg of sample, and adjust with *Enzyme reaction buffer* to a volume of 50 µL. [NOTE—The unit definition for PNGase F may differ among commercial sources. It may be necessary to experimentally determine the appropriate quantity of PNGase F required for the complete release of *N*-linked oligosaccharides in the sample.] Incubate at 37° for 18 h. Separate released oligosaccharides by centrifugation using a 10,000 molecular-weight-cut-off (MWCO) centrifugal filter. Dry the released oligosaccharides in a centrifugal vacuum evaporator to dryness. Add 2 µL of *APTS labeling reagent* and 2 µL of 1 M sodium cyanoborohydride to the dried oligosaccharides. Incubate at 55° for 90 min. Add 46 µL of water to quench the reaction and mixture. Add 5 µL of APTS-labeled sample to 95 µL of *Sample buffer.*

System suitability solution: Resuspend each of the suitable glycan standards (10 µg) in 50 µL of water, and mix on a vortex mixer. Add 5 µL of a suitable glycan standard (1 µg) to a microcentrifuge tube. Dry the glycan standard using centrifugal vacuum evaporation at ambient temperature. Add 2 µL of sodium cyanoborohydride to each standard. Add 2 µL of the *APTS labeling reagent* to each standard. Mix the standards on a vortex mixer, and centrifuge briefly to settle the liquid before incubation at 55° for 90 min. Quench the reaction by the addition of 46 µL of water to each standard. Standards can be stored at −20° up to 5 weeks.

Instrumental conditions

Mode: CE

Detector: Laser-induced fluorescence detector (488-nm excitation wavelength; 520-nm emission wavelength)

Capillary: 50-µm inner diameter bare fused-silica capillary with 50-cm total length and 40-cm separation length

Sample injection: 10-s hydrodynamic injection
Separation voltage: 22kV for 50 min
Samples: *Sample solution* and *System suitability solution*
Analysis: Integrate peaks in the resultant electropherogram, and report relative percentage time-corrected peak areas of major glycan structures relevant to the product. Comparison to suitable product-specific reference standard can be performed.

Method B: Liquid chromatography with fluorescence detection
Enzyme reaction buffer: Prepare 100 mM sodium phosphate, a pH of 7.5.
Labeling buffer: Prepare 8% (w/v) sodium acetate trihydrate and 4% (w/v) boric acid solutions in methanol by dissolving 800 mg of sodium acetate trihydrate and 400 mg of boric acid in 10 mL of methanol.
Labeling reagent solution: Prepare a 100-mg/mL stock solution of anthranilic acid (2-AA) in *Labeling buffer*. Mix with an equal volume of 1 M sodium cyanoborohydride in methanol for a final *Labeling reagent solution* containing 50 mg/mL of 2-AA and 0.5 M sodium cyanoborohydride. [NOTE—Keep the labeling reagent protected from light.]
Solution A: Prepare 50 mM ammonium formate, pH 4.4.
Solution B: Acetonitrile
Mobile phase: See *Table 1*.

Table 1

Time (min)	Solution A (%)	Solution B (%)
0.0	32.5	67.5
48.0	42.5	57.5
49.0	100	0
53.0	100	0
54.0	32.5	67.5
60.0	32.5	67.5

Sample preparation: Transfer 80 µg of test sample to a microcentrifuge tube. Add 3 µL of PNGase F (2.5 units/mL). [NOTE—The unit definition for PNGase F may differ among commercial sources. It may be necessary to experimentally determine the appropriate quantity of PNGase F required for complete release of *N*-linked oligosaccharides in the sample.] Add 14 µL of *Enzyme reaction buffer*. Add water to 70 µL of total volume, and incubate at 37° for 18 h. Add 70 µL of freshly prepared *Labeling reagent solution*, and incubate at 70° for 2 h in a fume hood. Allow to cool, and add 60 µL of 50% methanol to each sample. Mix, then centrifuge. Remove 140 µL of the supernatant, and transfer to a microcentrifuge tube. Add 500 µL of acetonitrile to the supernatant-containing tube. Load the sample onto a hydrophilic-interaction solid-phase extraction cartridge to remove excess labeling reagent. Wash the cartridge with 95% acetonitrile (approximately 10 mL). Elute the labeled glycans from the cartridge with 0.5 mL of 20% acetonitrile. Dilute the eluate 1:1 with acetonitrile.

Chromatographic system
(See *Chromatography* ⟨621⟩, *System Suitability*.)
Mode: LC
Column: 4.6-mm × 15-cm; 3-µm packing L68
Detector: Fluorescence (360-nm excitation wavelength; 420-nm emission wavelength)
Column temperature: Maintain column at 30°.
Flow rate: 0.8 mL/min
Injection volume: 50 µL
Analysis
Sample: *Sample preparation*
Integrate peaks in the resulting chromatogram, and report relative percentage peak areas of major glycan structures relevant to the product. Comparison to a suitable product-specific reference standard can be performed.

• **OLIGOSACCHARIDE ANALYSIS—SIALIC ACID ANALYSIS**
[NOTE—The range of the standard curve or the mass of test sample may require modification depending on the sialic acid content of the monoclonal antibody.]
Solution A: Prepare 100 mM sodium hydroxide by diluting 10.4 mL of a 50% (w/w) sodium hydroxide solution in 2 L of water. [NOTE—Use high-quality water of high resistivity (18 MΩ-cm or better) that contains as little dissolved oxygen as possible.]
Solution B: Prepare a solution containing 100 mM sodium hydroxide and 1 M sodium acetate by adding 82.0 g of sodium acetate to 800 mL of water. Add 5.2 mL of 50% (w/w) sodium hydroxide, and dilute with water to a final volume of 1000 mL.
Mobile phase: See *Table 2*.

General Chapters

Table 2

Time (min)	Solution A (%)	Solution B (%)
0.0	93	7
10.0	70	30
11.0	70	30
12.0	93	7
15.0	93	7

Standard stock solution: Prepare 0.2 mM solutions of USP *N*-Acetylneuraminic Acid (NeuAc) RS and USP *N*-Glycolylneuraminic Acid RS (NeuGc) in 20 mM sodium acetate buffer, pH 5.2. Dilute an appropriate volume of this solution with 20 mM sodium acetate buffer, pH 5.2, to obtain a 0.02 mM *Standard stock solution.*

Internal standard stock solution: Prepare a 0.1 mM solution of 3-deoxy-D-glycero-D-galacto-2-nonulosonic acid (KDN) in 20 mM sodium acetate buffer, adjusted to a pH of 5.2.

Standard solutions: Prepare as indicated in *Table 3.*

Table 3

Standard	Concentration (µM)	Volume of Standard Stock Solution (µL)	Volume of 20 mM Sodium Acetate Buffer, pH 5.2 (µL)	Volume of Internal Standard Stock Solution (µL)
1	10	250	235	15
2	5	125	360	15
3	4	100	385	15
4	2	50	435	15
5	1	25	460	15
6	0.4	10	475	15

System suitability solution: Prepare 3 µM solutions of NeuAc, NeuGc, and KDN in 20 mM sodium acetate buffer, adjusted to a pH of 5.2. Store the *System suitability solution* at −70°.

Sample solution: Pipet a volume of test sample equivalent to 0.5 mg into a microcentrifuge tube. Dilute with 20 mM sodium acetate buffer, pH 5.2, to a total volume of 475 µL. Confirm the pH with a test strip, and add 10 µL of 10 milliunit/µL of neuraminidase. Incubate for 5 h at 37°. Add 15 µL of *Internal standard stock solution.* Mix on a vortex mixer, and transfer the sample to an autosampler vial. [NOTE—A slight adjustment in sample preparation may be necessary depending on the test sample and the quality of the enzyme. Adjust the incubation time accordingly.]

Chromatographic system

(See *Chromatography* ⟨621⟩, *System Suitability.*)

Mode: LC

Detector: Integrated amperometric detector with gold electrode

Column: 4-mm × 25-cm; 10-µm packing L46

Flow rate: 1 mL/min

Injection volume: 50 µL

Use the following waveform for the electrochemical detector (see *Table 4*).

Table 4

Time (s)	Potential (V)	Integration
0.00	+0.10	—
0.20	+0.10	Begin
0.40	+0.10	End
0.41	−2.00	—
0.42	−2.00	—
0.43	+0.60	—
0.44	−0.10	—
0.50	−0.10	—

Analysis

Samples: *Standard solutions, System suitability solution,* and *Sample solution*

Integrate the NeuAc, NeuGc, and *Internal standard stock solution* peaks in each chromatogram. For the *Standard solutions,* evaluate the NeuAc and NeuGc peak areas relative to the peak area of the *Internal standard stock solution* as follows.

Area of NeuAc peak/area of *Internal standard stock solution* peak × 100

Area of NeuGc peak/area of *Internal standard stock solution* peak × 100

Generate NeuAc and NeuGc standard curves. Quantify NeuAc and NeuGc in the *Sample solution* by comparison of the relative percent of NeuAc of the *Internal standard stock solution* and the relative percent of NeuGc of the *Internal standard stock solution*, using the standard curves.

Divide the determined NeuAc and NeuGc concentrations by the test sample concentration, and report as molar ratio (i.e., numbers of NeuAc and NeuGc per molecule of test sample).

⟨130⟩ PROTEIN A QUALITY ATTRIBUTES

INTRODUCTION

Protein A is coupled to a resin support in order to create protein A affinity chromatography media commonly used in the manufacturing of recombinant therapeutic monoclonal antibodies. Natural protein A is derived from *Staphylococcus aureus* and contains five homologous antibody binding regions and a C-terminal region for cell wall attachment. In addition to naturally derived protein A, recombinant material manufactured in *Escherichia coli,* as well as several engineered versions of the protein, also manufactured recombinantly, have entered the market place. When immobilized on a column, protein A provides a highly efficient and robust purification method for purifying antibodies at various scales. However, protein A ligand from the column can co-elute with the antibody during purification, an effect which is often referred to as protein A leaching. This tendency increases as the chromatography medium ages. Engineered versions of protein A may improve the pH tolerance of the medium, but do not eliminate leaching. It is the current regulatory expectation that leached protein A should be cleared during the purification of antibodies for human use, and manufacturing processes should be validated accordingly. Enzyme-Linked Immunosorbent Assay (ELISA)-based residuals testing is generally employed during process development and validation to assure the efficient removal of residual protein A during process steps following protein A affinity chromatography. In addition, the manufacturer should have a clear understanding and documentation of resin and ligand quality through raw materials qualification and column lifetime studies.

General Chapter ⟨130⟩ describes quality attributes of protein A ligands that are used in chromatography media for the manufacture of therapeutic monoclonal antibodies: Protein A; rProtein A; rProtein A, C-Cys; rProtein A, B4, C-Cys.

- **PROTEIN A**

  $C_{1995}H_{3163}N_{597}O_{697}S_3$
  46,760
  N-terminal Sequence AQHDEA
  C-terminal Sequence IAADNK

  Protein A is derived from *Staphylococcus aureus.* The structure is composed of a single polypeptide chain containing four IgG binding domains. With the exception of IgG_3, all other human IgGs bind to protein A. Each molecule of Protein A is capable of binding two IgG molecules. It is manufactured as a bulk solution at a concentration of greater than 20 mg protein A per mL with an IgG-binding potency of greater than 95%. Because Protein A is used as an ancillary material in the manufacture of recombinant therapeutic drugs, regulatory requirements differ from those for therapeutic drug products.
- **PACKAGING AND STORAGE:** Store in closed containers at the temperature indicated on the label.
- **LABELING:** Preserve in sealed containers, and store at a temperature of −20° or below.
- **USP REFERENCE STANDARDS ⟨11⟩**

  USP Endotoxin RS
  USP Protein A RS
- **IDENTIFICATION**

  A. SDS-PAGE: It meets the requirements of *Identification* test *A* under *rProtein A* using USP Protein A RS.

  B. IgG Binding: It meets the requirements of *Identification* test *B* under *rProtein A* using USP Protein A RS.
- **MICROBIAL ENUMERATION TESTS ⟨61⟩** and **TESTS FOR SPECIFIED MICROORGANISMS ⟨62⟩:** The total aerobic microbial count does not exceed 100 cfu per mL, and the total yeasts and molds count does not exceed 10 cfu per mL.
- **BACTERIAL ENDOTOXINS TEST ⟨85⟩:** It contains not more than 1 USP Endotoxin Unit per mg of total protein. [NOTE—The *Bacterial Endotoxins Test* for Protein A is used to describe the quality of this ancillary material. This test does not define the acceptable level of bacterial endotoxin in the preparation of injectable dosage forms in which Protein A is used.]
- **TOTAL PROTEIN**

  (See *Ultraviolet-Visible Spectroscopy* ⟨857⟩.)

  Prepare triplicate samples for analysis by diluting Protein A to 3.0 mg per mL in *Water for Injection.* Measure the absorbance of each sample at 275 nm after correcting for the absorbance using *Water for Injection* as the blank. Determine the protein concentration using the equation:

  Protein concentration (mg per mL) = (A275/0.149)

General Chapters

in which A is the absorbance of Protein A at the wavelength of 275 nm and 0.149 is the molar absorptivity. Average the triplicate results, and determine a coefficient of variance (CV): the CV is ≤5%.

• **Limit of Common Contaminant Protein and Corresponding Assay**

Enterotoxin B: Enterotoxin B is determined using a commercially available microstrip enzyme-immunoassay kit.[1] Wells of the microstrips are coated with sheep antibodies to enterotoxin B. Standard curves are made using the ELISA kit control. The negative controls are wells coated with serum from nonimmunized sheep. The level of enterotoxin is determined from the standard curve. The specification for the enterotoxin B level is ≤1 ng per mg of total protein.

• **Chromatographic Purity**

[Note—The size-exclusion chromatographic purity test resolves Protein A from high molecular weight contaminants.]

Mobile phase: Prepare a solution of 50 mM sodium dihydrogen phosphate, pH 6.5 in the following manner. Add 6.9 ± 0.1 g of sodium dihydrogen phosphate into a 1000-mL beaker. Dilute with water to 900 mL, and adjust with 5 M sodium hydroxide to a pH of 6.50 ± 0.05. Transfer the solution into a 1000-mL volumetric flask, and dilute with water to volume. Pass the solution through a 0.22-µm membrane filter.

Column regeneration solution: Prepare a solution of 0.1 M sodium dihydrogen phosphate, pH 3.0 in the following manner. Add 13.8 ± 0.1 g of sodium dihydrogen phosphate into a 1000-mL beaker. Dilute with water to 900 mL, and adjust with hydrochloric acid to a pH of 3.0 ± 0.1. Transfer the solution into a 1000-mL volumetric flask, and dilute with water to volume. Pass the solution through a 0.22-µm membrane filter.

Column storage solution: Mix 100 mL of methanol with 900 mL of water.

Test solution: Dilute Protein A to approximately 1 mg per mL with *Mobile phase.*

Calibration standards: Using *Mobile phase,* prepare separate 1 mg per mL solutions of each of the following: thyroglobulin (670 kD), IgG (150 kD), beta lactoglobulin (36 kD), and lysozyme (14 kD).

Standard solution: Prepare a solution containing 1 mg per mL of USP Protein A RS in *Mobile phase.*

Chromatographic system

(See *Chromatography* ⟨621⟩.)

The liquid chromatograph is equipped with a 280-nm detector and a 7.8-mm × 30-cm column that contains packing L33. Equilibrate the column for approximately 30 minutes at 0.5 mL of *Mobile phase* per minute or until a stable baseline is achieved.

Procedure: Separately inject 100 µL of each sample, and run the samples in the following sequence: *Calibration standards,* thyroglobulin, IgG, beta lactoglobulin, and lysozyme; the *Standard solution;* and the *Test solution.* Run the sequence three times isocratically using *Mobile phase* at 0.5 mL per minute for 30 minutes. Absorbance is detected at 280 nm. Analyze the 280-nm peak data, and pick the retention time (RT) with the largest peak area. Using the data from the *Calibration standards,* plot the mean RT versus the log molecular weight to produce the standard curve. The purity should be ≥95% in the main peak. Use the formula from the standard curve to give the log molecular weights of the *Test solutions.* Convert the log molecular weights of the *Test solutions* and the *Standard solutions* to actual molecular weights. The apparent molecular weight of protein A from the *Standard solution* is between 156 and 205 kDa; and the Protein A from the *Test solution* is within the same range.

Column cleaning and storage: Rinse the column with 100 mL of *Column regeneration solution,* and store by flushing with 100 mL of *Column storage solution.*

rPROTEIN A, C-CYS

$C_{1478}H_{2320}N_{432}O_{503}S_4$
34317.5 Da
N-terminal Sequence AQHDEAQQNA

rProtein A, C-Cys is a recombinant Protein A lacking the C-terminal membrane binding part; instead, a C-terminal cysteine has been introduced for directed immobilization purposes. It has five homologous IgG binding domains identical to the native Protein A and is produced using *Escherichia coli* as the host cell followed by purification with conventional chromatography. rProtein A, C-Cys is manufactured as a bulk solution with an IgG-binding potency of greater than 95%. Because rProtein A, C-Cys is used as an ancillary material in the manufacture of recombinant therapeutic drugs, regulatory requirements differ from those for therapeutic drug products.

• **Packaging and Storage:** Store in closed containers at the temperature indicated on the label.

• **Labeling:** Preserve in sealed containers, and store at a temperature of −20° or below.

• **USP Reference Standards** ⟨11⟩

USP Endotoxin RS
USP rProtein A, C-Cys RS

• **Identification**

A. SDS-PAGE: It meets the requirements of *Identification* test *A* under *rProtein A* using USP rProtein A, C-Cys RS.

B. IgG Binding: It meets the requirements of *Identification* test *B* under *rProtein A* using USP rProtein A, C-Cys RS.

• **Microbial Enumeration Tests** ⟨61⟩ and **Tests for Specified Microorganisms** ⟨62⟩: The total aerobic microbial count does not exceed 100 cfu per mL, and the total yeasts and molds count does not exceed 10 cfu per mL.

---

[1] A suitable enzyme immunoassay kit is available from TECRA International Pty Ltd., Australia (No. SETVIA96).

General Chapters

- **Bacterial Endotoxins Test ⟨85⟩:** It contains not more than 1 USP Endotoxin Unit per mg of total protein. [Note—The *Bacterial Endotoxins Test* for rProtein A, C-Cys is used to describe the quality of this ancillary material. This test does not define the acceptable level of bacterial endotoxin in the preparation of injectable dosage forms in which rProtein A, C-Cys is used.]
- **Total Protein**

  (See ⟨857⟩.)

  Prepare triplicate samples for analysis by diluting the rProtein A, C-Cys to 3.0 mg per mL in *Water for Injection.* Measure the absorbance of each sample at 275 nm after correcting for the absorbance using *Water for Injection* as the blank. Determine the protein concentration using the equation:

  $$\text{Protein concentration (mg per mL)} = (A275/0.22)$$

  in which A is the absorbance of rProtein A, C-Cys, at the wavelength of 275 nm and 0.22 is the molar absorptivity. Average the triplicate results, and determine a coefficient of variance (CV): the CV is ≤2.5%.
- **Chromatographic Purity**

[Note—The size-exclusion chromatographic purity test resolves rProtein A, C-Cys from high molecular weight contaminants and low molecular weight contaminants.]

Mobile phase: Prepare a solution of 0.02 M sodium phosphate, pH 7.2 containing 0.15 M sodium chloride in the following manner. Add 0.96 ± 0.02 g of monobasic sodium phosphate hydrate, 2.32 ± 0.02 g of dibasic sodium phosphate dihydrate, and 8.76 g ± 0.02 g of sodium chloride into a 1000-mL beaker. Dilute with water to 900 mL, and adjust with 1 M sodium hydroxide to a pH of 7.2 ± 0.05. Transfer this solution into a 1000-mL volumetric flask, and dilute with water to volume. Pass the solution through a 0.45-µm membrane filter.

EDTA solution: Prepare a 20 mM ethylenediaminetetraacetic acid (EDTA) solution by dissolving 0.74 ± 0.02 g of EDTA in 100 mL of *Mobile phase.*

DTT solution: Prepare a 100 mM DL-dithiothreitol (DTT) solution by dissolving 1.54 ± 0.02 g of DTT in 100 mL of *Mobile phase.*

Pretreatment solution: Prepare a solution containing a mixture of *EDTA solution* and *DTT solution* (1:1, v/v). [Note—Prepare fresh just before use.]

Test solution: Dilute rProtein A, C-Cys 1 to 5 in *Pretreatment solution,* and mix gently. Incubate the sample at 40° for 60 minutes.

Chromatographic system

(See *Chromatography* ⟨621⟩.)

The liquid chromatograph is equipped with a 214-nm detector and a 10-mm × 30-cm column that contains packing L54. Equilibrate the column with at least two column volumes of *Mobile phase* at a flow rate of 0.4 mL per minute.

Procedure: Inject 100 µL of *Pretreatment solution,* and allow the chromatography to continue for at least two column volumes. Repeat this twice before injecting 100 µL of the *Test solution.* Absorbance is detected at 214 nm. Integrate the main peak from the *Test solution* run and all other peaks not present in the *Pretreatment solution* runs. Calculate the percentage of impurities in the portion of the rProtein A, C-Cys taken by the formula:

$$100(r_i/r_s)$$

in which r_i is the peak response for each impurity; and r_s is the sum of the responses of all the peaks: the sum of all impurities is not more than 5%; and the *Test solution* shows a major peak at approximately 35 minutes.

rPROTEIN A

$C_{1917}H_{3039}N_{565}O_{658}S_3$

44,618

N-terminal Sequence FLRPVE

Protein A is a component of the cell wall of *Staphylococcus aureus.* Recombinant Protein A (rProtein A) consists of five homologous immunoglobulin (IgG) binding domains (E, D, A, B, C) followed by a partial X domain sequence. It is expressed in *Escherichia coli* and purified via a column chromatography process. IgG columns are not used in the purification process. It is manufactured as a bulk solution with an IgG-binding potency greater than 95%. Release testing methods and specifications are described below. Because rProtein A is used as an ancillary material in the manufacture of recombinant therapeutic drugs, regulatory requirements differ from those of therapeutic drug products.

- **Packaging and Storage:** Store in closed containers at the temperature indicated on the label.
- **Labeling:** The labeling states that the material is of recombinant DNA origin along with the lot number, storage conditions, and the statement "Formulated in *Water for Injection.*"
- **USP Reference Standards ⟨11⟩**

  USP Endotoxin RS

  USP rProtein A RS

• **IDENTIFICATION**

A. SDS-PAGE

Molecular weight marker: Use a suitable molecular weight marker (MWM) containing protein bands between 20 and 200 kD.

PBS solution: Prepare a solution that contains 8065.0 mg and 200.0 mg of sodium chloride and potassium chloride, respectively, per L of 0.01 M sodium phosphate buffer, pH 7.4.

4X Sample buffer:[2] Dissolve 0.666 g of tris-hydrochloride, 0.682 g of tris base, 0.800 g of lithium dodecyl sulfate (LDS), 0.006 g of ethylenedinitrilotetraacetic acid (EDTA), and 4 g of glycerol in 8 mL of water; add 0.75 mL of 1% Coomassie brilliant blue G-250 (see Coomassie Blue G-250 in *Reagents* under *Reagents, Indicators, and Solutions*) solution and 0.25 mL of 1% phenol red solution. Mix well, and adjust the volume with water to 10 mL.

2X Sample buffer: Prepare a mixture of *4X Sample buffer* and water (1:1).

1X Sample buffer: Prepare a mixture of *2X Sample buffer* and water (1:1).

1 M Dithiothreitol solution: Dissolve 0.154 g of DL-dithiothreitol (DTT) in 1 mL of water.

2X Reducing sample buffer: Mix 180 µL of *2X Sample buffer* and 20 µL of *1 M Dithiothreitol solution.*

20X Running buffer:[3] Dissolve 104.6 g of 3-(*N*-morpholino)propanesulfonic acid (MOPS), 60.6 g of tris base, 10 g of sodium dodecyl sulfate (SDS), and 3.0 g of EDTA in 400 mL of water. Mix well, and adjust with water to 500 mL.

1X Running buffer: Prepare a solution of water and *20X Running buffer* (19:1).

Gel staining solution: Prepare a solution of Coomassie brilliant blue R-250 (see Coomassie Brilliant Blue R-250 in *Reagents* under *Reagents, Indicators, and Solutions*) having a concentration of 0.5 g per L in a mixture of water, isopropanol, and acetic acid (6.5:2.5:1.0). Filter, and store at room temperature. Silver staining is not recommended.

Destaining solution: Mix 100 mL of acetic acid with 900 mL of water.

Standard preparation: Dilute USP rProtein A RS to 0.4 mg per mL with *PBS solution.* Further dilute this solution 1:1 with *2X Reducing sample buffer,* and incubate in a closed tube for 5 minutes at 90°. Mix, and quick spin prior to loading.

Test preparation: Dilute rProtein A with *PBS solution* to 0.4 mg per mL. Proceed as directed under *Standard preparation* beginning with "Further dilute."

Comix solution: Dilute rProtein A and USP rProtein A RS with *PBS solution* to 0.8 mg per mL. This solution contains 0.4 mg per mL of each protein. Proceed as directed under *Standard preparation* beginning with "Further dilute."

SDS-PAGE gel and apparatus set-up: Assemble gel apparatus following the manufacturer's instructions. Lock the gel tension wedge in place, and fill approximately 200 mL of *1X Running buffer* into the inside chamber. If there are no leaks, pour 600 mL of *1X Running buffer* into the outer chamber. Gently pull the comb out of the cassette to immerse the wells in *1X Running buffer.* Load 10 µL of each preparation as directed below under *Gel loading* onto a 10% Bis-Tris SDS-PAGE gel.[4]

Gel loading: Use the following gel loading scheme when running one *Test preparation* (see *Table 1*). Each *Test preparation* is run by itself and as part of the *Comix solution* that contains the rProtein A and USP rProtein A RS.

Table 1

Lane	Sample	Load Volume (µL)	Load Amount (µg)
1	*1X Sample buffer*	10	N/A
2	MWM	20	N/A
3	*Test preparation* #1	10	2
4	*Comix solution* #1	10	4 (total)
5	*Test preparation* #1	10	2
6	*1X Sample buffer*	10	N/A
7	*Standard preparation*	10	2
8	MWM	20	N/A
9	—	—	—
10	—	—	—

Running the gel: Set the voltage to 125 volts, and run at a constant voltage. Run the gels until the bromophenol blue band is approximately 5 mm from the bottom of the gel (approximately 120 to 140 minutes).

Gel staining: Pour approximately 100 mL of *Gel staining solution* into the staining container. Place the gel into the staining container, and allow the stain to completely cover the gel. Cook the gel and container in a microwave for 30 seconds. Place the staining container on an orbital shaker, and stain the gel for 1 hour with gentle shaking.

Destaining: Drain the *Gel staining solution,* and add enough *Destaining solution* to the container to cover the gel. Place the container on an orbital shaker, and shake at low speed. Change the *Destaining solution* as necessary until a clear

[2] 4X NuPAGE LDS sample buffer is available from Invitogen (No. NP0007).

[3] 20X NuPAGE MOPS SDS Running Buffer is available from Invitrogen (No. NP0001).

[4] 10% Bis-Tris SDS-PAGE gel is available from Invitrogen (No. NP0301).

background is obtained. After destaining, rinse the gel thoroughly with water, and leave the gel in water for 10 minutes before scanning.

Gel scanning: Apply some water to the glass plate of the scanner, and place the gels on a wetted glass plate. Eliminate any bubbles. Using appropriate settings, scan the gels.

Data analysis: Choose a band between the 20 kD and 30 kD bands of the MWM to calculate the percentage of the retention factor. Draw a line in one lane (lane containing *1X Sample buffer*) from the well to the apex (region of greatest intensity) of the chosen band.

The length of this line is denoted as the total distance (D_T). For the lanes containing samples draw a line from the well to the apex of each band. For each band the length of this distance is the migration distance (D_M) in mm. Record the D_T and D_M on the report sheet for each peak or band. The total distance should be the same for each lane on a gel. Calculate the percentage of the retention factor (R_F) of each major peak or band, and document on the report sheet using the following equation:

$$\%R_F = D_M/D_T \times 100$$

Also for each gel, record the number of bands and approximate molecular weight of each band in each sample.

System suitability: All bands between 20 kD and 70 kD are present. The lane containing *1X Sample buffer* does not contain any bands.

Specificity: The rProtein A has one major band and a similar molecular weight that corresponds to those of the USP rProtein A RS. The *Comix solution* also shows a single major band.

B. IgG Binding: [NOTE—The IgG binding assay is a functional method for determining the percentage of rProtein A capable of binding to immobilized human polyclonal immunoglobulin. Since the percent of functional rProtein A in each lot is not less than 95%, the assay measures unbound protein versus total protein injected. This is done by comparing the absorbance in the flow-through to absorbance from an injection bypassing the column.]

Sample pretreatment (desalting): In order to remove any buffer components that may contribute to absorbance in the "unbound" IgG column fraction, samples are desalted with *Solution A.* Desalting may be performed using a suitable desalting column[5] depending on the volumes required.

IgG column: A 1-mL Sepharose column[6] with immobilized human polyclonal IgG (hIgG) is required to perform this assay. [NOTE—The IgG column requires washing when it is new, when it has performed several analysis cycles, or after system suitability failure. Column washing procedure is not required for each sample injection.]

Column washing solution A: Prepare a solution of 0.5 M acetic acid, pH 3.4 by adding 28.6 mL of acetic acid into a 1000-mL beaker, diluting to 900 mL with water, and adjusting with ammonium acetate to a pH of 3.4. Transfer the solution into a 1000-mL volumetric flask, and dilute with water to volume. Pass the solution through a 0.45-µm membrane filter.

Column washing solution B: Prepare a solution of 50 mM Tris, pH 7.6, 150 mM sodium chloride, and 0.05% Tween 20 by the following procedure. Add 6.06 ± 0.01 g of Tris and 8.77 ± 0.01 g of sodium chloride into a 1000-mL beaker. Dilute with water to 900 mL, and adjust with 0.5 M sodium hydroxide to a pH of 7.60 ± 0.05. Transfer the solution into a 1000-mL volumetric flask, and dilute with water to volume. Pass the solution through a 0.45-µm membrane filter (buffer solution). Add 0.5 mL of Tween 20 into 1 L of the buffer solution and mix thoroughly.

Solution A: Prepare a solution of 20 mM monobasic sodium phosphate and 150 mM sodium chloride, pH 7.6 by the following procedure. Add 2.76 ± 0.01 g monobasic sodium phosphate hydrate and 8.77 ± 0.01 g sodium chloride into a 1000-mL beaker. Dilute with water to 900 mL, and adjust with 5 M sodium hydroxide to a pH of 7.60 ± 0.05. Transfer the solution into a 1000-mL volumetric flask, and dilute with water to volume. Pass the solution through a 0.45-µm membrane filter.

Solution B: Prepare a solution of 100 mM phosphoric acid pH 2.8 by the following procedure. Add 6.8 mL of phosphoric acid into a 1000-mL beaker. Dilute with water to 900 mL, and adjust with 2 M potassium hydroxide to a pH of 2.80 ± 0.05. Transfer the solution into a 1000-mL volumetric flask, and dilute with water to volume.

Mobile phase: Use variable mixtures of *Solution A* and *Solution B* as directed for *Chromatographic system.* Make adjustments if necessary (see *System Suitability* under *Chromatography* ⟨621⟩).

Standard preparation: Thaw USP rProtein A RS, and use directly.

Test preparation: Prepare a 4.0 to 6.0 mg per mL rProtein A solution in *Solution A.*

Chromatographic system: The liquid chromatograph is equipped with a 280-nm detector and a 1-mL column with immobilized hIgG. The chromatograph is equipped with a bypass valve to allow flow to be diverted from the column. Each analysis consists of a series of two injections, one where the sample is injected onto the column and one where the sample bypasses the column and flows directly into the detector. Perform three replicate analyses. The chromatograph is programmed as follows (see *Table 2*).

[5] Zeba columns are available from Pierce; Nap-10 columns are available from GE Healthcare.

[6] HiTrap IgG Sepharose 6 FF column is available from GE Healthcare (No. 90-1003-97).

Table 2

Flow Rate (mL per minute)	Time (minutes)	Solution A (%)	Solution B (%)	Valve Position	Elution
1.0	0–6	100	0	Column	Re-equilibration
1.0	6–12	100→0	0→100	Column	Re-equilibration
1.0	12–22	100	0	Column	Equilibration
0.4	22–25	100	0	Column	Equilibration
0.4 (sample injected)	25–35	100	0	Column	Isocratic
1.0	35–49	100→0	0→100	Column	Regeneration
1.0	49–63	0→100	100→0	Column	Re-equilibration
1	63–65	100	0	Bypass	Equilibration
0.4	65–68	100	0	Bypass	Equilibration
0.4 (sample injected)	68–75	100	0	Bypass	Isocratic

Chromatograph the *Standard preparation,* record the peak responses, and calculate the percentage of hIgG binding as directed for *Procedure:* the percentage of hIgG binding ≥ 95% and the relative standard deviation for replicate analysis is not more than 1%.

Procedure: Inject a volume (about 100 µL) of the *Test preparation.* Record the chromatogram, and measure the peak responses. Calculate the percentage of hIgG binding activity by the following formula:

$$100 - 100(r_C/r_B)$$

in which r_C is the unbound material peak response from the column injection and r_B is the bypass peak response from the bypass injection. Each replicate analysis of the *Test preparation* is not less than 95% of hIgG binding. Report the average value from three replicate analyses.

- **Microbial Enumeration Tests** 〈61〉 and **Tests for Specified Microorganisms** 〈62〉**:** The total aerobic microbial count does not exceed 100 cfu per mL, and the total yeasts and molds count does not exceed 10 cfu per mL.
- **Bacterial Endotoxins Test** 〈85〉**:** It contains not more than 0.5 USP Endotoxin Unit per mg of total protein. [Note—The *Bacterial Endotoxins Test* for rProtein A is used to describe the quality of this ancillary material. This test does not define the acceptable level of bacterial endotoxin in the preparation of injectable dosage forms in which rProtein A is used.]
- **Total Protein**

(See 〈857〉.)

Prepare triplicate samples for analysis by diluting the rProtein A to 3.0 mg per mL in *Water for Injection.* Measure the absorbance of each sample at 275 nm after correcting for the absorbance using *Water for Injection* as the blank. Determine the protein concentration using the equation:

$$\text{Protein concentration (mg per mL)} = (A_{275}/0.165)$$

in which A is the absorbance of rProtein A at the wavelength of 275 nm and 0.165 is the molar absorptivity. Average the triplicate results, and determine a coefficient of variance (CV): the CV is ≤5%.

- **UV Spectral Analysis:** Dilute rProtein A to 1 mg per mL in *Water for Injection.* Using a scanning UV spectrophotometer and *Water for Injection* as the blank, obtain spectral scans over the range of 240 to 360 nm. From the resulting data, calculate the absorbance value at 270 nm and the ratio of absorbance at 270 to 250 nm (i.e., E270/E250): the absorbance at 270 nm of a 1 mg per mL solution of rProtein A in *Water for Injection* is within the range 0.14–0.20.
- **Chromatographic Purity**

[Note—The size-exclusion chromatographic purity test resolves rProtein A from high molecular weight contaminants.]

Mobile phase: A solution of 0.3 M sodium phosphate, pH 7 is prepared by mixing monobasic and dibasic phosphate solutions in the following manner. Weigh 21.3 ± 0.1 g of dibasic anhydrous sodium phosphate, and dissolve in 500 mL of water to obtain a 0.3 M dibasic sodium phosphate solution *(Solution 1).* Into a separate container, weigh 18.0 ± 0.1 g monobasic anhydrous sodium phosphate, and dissolve in 500 mL of water to obtain a 0.3 M monobasic sodium phosphate solution *(Solution 2).* Calibrate a pH meter using pH calibrators at a pH of 7 and 10. Add 400 mL of *Solution 1* to a 1-L beaker. Transfer the pH probe to the beaker. Slowly add *Solution 2* to the solution until the pH is 7.0 ± 0.1. Pass the solution through a 0.45-µm membrane filter.

Standard solution: Dilute USP rProtein A RS to 1 mg per mL in *Mobile phase.*

Test solution: Dilute rProtein A to 1 mg per mL in *Mobile phase.*

Chromatographic system

(See *Chromatography* 〈621〉.)

The liquid chromatograph is equipped with a 214-nm and 280-nm detector and a 9.4-mm × 25-cm column that contains packing L35. The flow rate is 1 mL per minute. Chromatograph the *Standard solution* as directed for *Procedure:* rProtein

A shows a single major peak at approximately 9 minutes and the area percentage is ≥98% at 214 nm and ≥95% at 280 nm.

Procedure: Inject 100 µL of the *Test solution* into the chromatograph, run isocratically for 15 minutes, and record the chromatogram. The values for the rProtein A from the *Test solution* correspond to the specifications of the USP rProtein A RS from the *Standard solution.*

• **Isoforms**

Standard solution: Thaw USP rProtein A RS, and use directly.

Test solution: Dilute rProtein A to 4 mg per mL in *Water for Injection.*

pI Markers: Use a suitable marker set containing markers between 3 and 10.[7]

IEF gel: Use a suitable gel with the range of between 3 and 10 and a size of 100 × 125 mm.[8]

Procedure: Apply 5-µL aliquots of the *pI Markers, Test solution,* and the *Standard solution* to the *IEF gel*, and run under 1W of power for approximately 10 minutes. Remove the sample mask, and apply power with concurrent cooling between 5° to 10° of the focusing chamber for 40 minutes at a setting of 1000V, 20 mA, 25W. Fix the *IEF gel* for 1 hour in 20% trichloroacetic acid, then stain using a suitable stain for IEF gels.[9] Finally, wash and dry the gel: the correlation coefficient of the best fit line for the *pI Markers* versus their migration in cm is ≥0.990, and the rProtein A from the *Standard solution* shows a single major band within the pI range of 4.6 to 5.2. A single band is seen in the *Test solution* that corresponds to the pI range of the *Standard solution.*

• **Limit of Triton X-100**

Mobile phase: Prepare a filtered and degassed mixture of water and acetonitrile (60:40).

Test solution: Dilute rProtein A to 5 mg per mL in *Water for Injection.*

Triton X-100 spike solution: Combine 5 mg per mL of USP rProtein A RS and 0.15% Triton X-100 (9:1) to obtain a solution having known concentrations of rProtein A and 0.015% Triton X-100.

Chromatographic system

(See *Chromatography* ⟨621⟩.)

The liquid chromatograph is equipped with a 214-nm and a 280-nm detector and a 4.6-mm × 25-cm column that contains 5-µm packing L11. The flow rate is 1 mL per minute. Chromatograph the *Triton X-100 spike solution* as directed for *Procedure:* Triton X-100 has a single major peak at approximately 9 minutes, and the rProtein A shows a smaller or undetectable peak at the same retention time.

Procedure: Inject about 100 µL of the *Test solution* into the chromatograph, run isocratically for 35 minutes, and record the chromatogram. The absorbance is detected at 223 nm: the Triton X-100 peak is not more than 0.015% (equivalent to the *Triton X-100 spike solution*).

rPROTEIN A, B_4, C-CYS

$C_{1177}H_{1854}N_{326}O_{384}S_1$
26747.6 Da
N-terminal Sequence AQGTVDAKFD

rProtein A, B_4, C-Cys is a recombinant protein derived from the B-domain of Protein A. The Protein A domain has been alkali-stabilized by site-specific mutagenesis and multimerized to a tetramer with a C-terminal cysteine for directed immobilization purposes. rProtein A, B_4, C-Cys is produced using *Escherichia coli* as the host cell followed by purification with conventional chromatography. rProtein A, B_4, C-Cys is manufactured as a bulk solution with an IgG-binding potency of greater than 95%. Because rProtein A, B_4, C-Cys is used as an ancillary material in the manufacture of recombinant therapeutic drugs, regulatory requirements differ from those for therapeutic drug products.

• **Packaging and Storage:** Store in closed containers at the temperature indicated on the label.

• **Labeling:** Preserve in sealed containers, and store at a temperature of −20° or below.

• **USP Reference Standards ⟨11⟩**

USP Endotoxin RS
USP rProtein A, B_4, C-Cys RS

• **Identification**

A. SDS-PAGE: It meets the requirements of *Identification* test *A* under *rProtein A* using USP rProtein A, B_4, C-Cys RS.

B. IgG Binding: It meets the requirements of *Identification* test *B* under *rProtein A* using USP rProtein A, B_4, C-Cys RS.

• **Microbial Enumeration Tests ⟨61⟩** and **Tests for Specified Microorganisms ⟨62⟩:** The total aerobic microbial count does not exceed 100 cfu per mL, and the total yeasts and molds count does not exceed 10 cfu per mL.

• **Bacterial Endotoxins Test ⟨85⟩:** It contains not more than 1 USP Endotoxin Unit per mg of total protein. [Note—The *Bacterial Endotoxins Test* for rProtein A, B_4, C-Cys is used to describe the quality of this ancillary material. This test does not define the acceptable level of bacterial endotoxin in the preparation of injectable dosage forms in which rProtein A, B_4, C-Cys is used.]

• **Total Protein**

(See ⟨857⟩.)

---

[7] pI markers in the 3–10 range are available from BioRad (No. 161-0310).
[8] IEF gels in the 3–10 range are available from Cambrex (No. 56015).
[9] ISS Pro-Blue is available from Integrated Separation Systems.

Formulation buffer solution: Prepare a solution of 0.02 M potassium phosphate, pH 7.0, containing 0.15 M potassium chloride and 2 mM of ethylenediaminetetraacetic acid (EDTA) in the following manner. Add 2.72 ± 0.01 g of monobasic potassium phosphate anhydrous, 11.18 g ± 0.22 g of potassium chloride, and 0.744 ± 0.02 g of EDTA into a 1000-mL beaker. Dilute with water to 900 mL, and adjust with 1 M sodium hydroxide to a pH of 7.00 ± 0.05. Transfer the solution into a 1000-mL volumetric flask, and dilute with water to volume. Pass the solution through a 0.45-µm membrane filter.

Test preparation: Dilute the rProtein A, B_4, C-Cys to 3.0 mg per mL with *Formulation buffer solution.*

Procedure: Prepare triplicate samples for analysis. Measure the absorbance of each *Test preparation* at 275 nm after correcting for the absorbance using the *Formulation buffer solution* as the blank. Determine the protein concentration using the equation:

$$\text{Protein concentration (mg per mL)} = (A275/0.22)$$

in which A is the absorbance of rProtein A, B_4, C-Cys, at the wavelength of 275 nm and 0.22 is the molar absorptivity. Average the triplicate results, and determine a coefficient of variance (CV): the CV ≤2.5%.

• **Chromatographic Purity**

[Note—The size-exclusion chromatographic purity test resolves rProtein A, B_4, C-Cys from high molecular weight contaminants and low molecular weight contaminants.]

Mobile phase: Prepare a solution of 0.02 M sodium phosphate, pH 7.2 containing 0.15 M sodium chloride in the following manner. Add 0.96 ± 0.02 g of monobasic sodium phosphate hydrate, 2.32 ± 0.02 g of dibasic sodium phosphate dihydrate, and 8.76 g ± 0.02 g of sodium chloride into a 1000-mL beaker. Dilute with water to 900 mL, and adjust with 1 M sodium hydroxide to a pH of 7.2 ± 0.05. Transfer this solution into a 1000-mL volumetric flask, and dilute with water to volume. Pass the solution through a 0.45-µm membrane filter.

EDTA solution: Prepare a 20 mM EDTA solution by dissolving 0.74 ± 0.02 g of EDTA in 100 mL of *Mobile phase.*

DTT solution: Prepare a 100 mM DL-dithiothreitol (DTT) solution by dissolving 1.54 ± 0.02 g of DTT in 100 mL of *Mobile phase.*

Pretreatment solution: Prepare a solution containing a mixture of *EDTA solution* and *DTT solution* (1:1, v/v). [Note—Prepare fresh just before use.]

Test solution: Dilute rProtein A, B_4, C-Cys 1 to 5 in *Pretreatment solution,* and mix gently. Incubate the sample at 40° for 60 minutes.

Chromatographic system

(See *Chromatography* ⟨621⟩.)

The liquid chromatograph is equipped with a 214-nm detector and a 10-mm × 30-cm column that contains packing L54. Equilibrate the column with at least two column volumes of *Mobile phase* at a flow rate of 0.4 mL per minute.

Procedure: Inject 100 µL of *Pretreatment solution,* and allow the chromatography to continue for at least two column volumes. Repeat this twice before injecting 100 µL of the *Test solution.* Absorbance is detected at 214 nm. Integrate the main peak from the *Test solution* run and all other peaks not present in the *Pretreatment solution* runs. Calculate the percentage of impurities in the portion of rProtein A, B_4, C-Cys taken by the formula:

$$100(r_i/r_s)$$

in which r_i is the peak response for each impurity; and r_s is the sum of all the responses of all the peaks: the sum of all impurities is not more than 5%; and the *Test solution* shows a major peak at approximately 37 minutes.

⟨151⟩ PYROGEN TEST

Change to read:

▲INTRODUCTION▲USP40

The pyrogen test is designed to limit to an acceptable level the risks of febrile reaction in the patient to the administration, by injection, of the product concerned. The test involves measuring the rise in temperature of rabbits following the intravenous injection of a test solution and is designed for products that can be tolerated by the test rabbit in a dose not to exceed 10 mL/kg injected intravenously within a period of NMT 10 min. For products that require preliminary preparation or are subject to special conditions of administration, follow the additional directions given in the individual monograph or, in the case of antibiotics or biologics, the additional directions given in the federal regulations (see *Biologics* ⟨1041⟩). ▲A validated, equiva-

lent in vitro pyrogen or bacterial endotoxin test may be used in place of the in vivo rabbit pyrogen test,[1] where appropriate.▲USP40

APPARATUS AND DILUENTS

Render the syringes, needles, and glassware free from pyrogens by heating at 250° for NLT 30 min or by any other suitable method. Treat all diluents and solutions for washing and rinsing of devices or parenteral injection assemblies in a manner that will assure that they are sterile and pyrogen-free. Periodically perform control pyrogen tests on representative portions of the diluents and solutions for washing or rinsing of the apparatus. Where *Sodium Chloride Injection* is specified as a diluent, use Injection containing 0.9% of sodium chloride (NaCl).

TEMPERATURE RECORDING

Use an accurate temperature-sensing device such as a clinical thermometer, or thermistor probes or similar probes that have been calibrated to assure an accuracy of ±0.1° and have been tested to determine that a maximum reading is reached in less than 5 min. Insert the temperature-sensing probe into the rectum of the test rabbit to a depth of NLT 7.5 cm, and, after a period of time NLT that previously determined as sufficient, record the rabbit's body temperature.

TEST ANIMALS

Use healthy, mature rabbits. House the rabbits individually in an area of uniform temperature between 20° and 23° and free from disturbances likely to excite them. The temperature varies NMT ±3° from the selected temperature. Before using a rabbit for the first time in a pyrogen test, condition it NMT 7 days before use by a sham test that includes all of the steps as directed in *Procedure* except injection. Do not use a rabbit for pyrogen testing more frequently than once every 48 h, nor prior to 2 weeks following a maximum rise of its temperature of 0.6° or more while being subjected to the pyrogen test, or following its having been given a test specimen that was adjudged pyrogenic.

PROCEDURE

Perform the test in a separate area designated solely for pyrogen testing and under environmental conditions similar to those under which the animals are housed and free from disturbances likely to excite them. Withhold all food from the rabbits used during the period of the test. Access to water is allowed at all times, but may be restricted during the test. If rectal temperature-measuring probes remain inserted throughout the testing period, restrain the rabbits with light-fitting neck stocks that allow the rabbits to assume a natural resting posture. NMT 30 min prior to the injection of the test dose, determine the "control temperature" of each rabbit: this is the base for the determination of any temperature increase resulting from the injection of a test solution. In any one group of test rabbits, use only those rabbits whose control temperatures do not vary by more than 1° from each other, and do not use any rabbit with a temperature exceeding 39.8°.

Unless otherwise specified in the individual monograph, inject into an ear vein of each of three rabbits 10 mL of the test solution per kg of body weight, completing each injection within 10 min after start of administration. The test solution is *either* the product, constituted if necessary as directed in the labeling, *or* the material under test treated as directed in the individual monograph and injected in the dose specified therein. For pyrogen testing of devices or injection assemblies, use washings or rinsings of the surfaces that come in contact with the parenterally administered material or with the injection site or internal tissues of the patient. Assure that all test solutions are protected from contamination. Perform the injection after warming the test solution to a temperature of 37 ± 2°. Record the temperature at 30-min intervals between 1 and 3 h subsequent to the injection.

TEST INTERPRETATION AND CONTINUATION

Consider any temperature decreases as zero rise. If no rabbit shows an individual rise in temperature of 0.5° or more above its respective control temperature, the product meets the requirements for the absence of pyrogens. If any rabbit shows an individual temperature rise of 0.5° or more, continue the test using five other rabbits. If NMT three of the eight rabbits show individual rises in temperature of 0.5° or more and if the sum of the eight individual maximum temperature rises does not exceed 3.3°, the material under examination meets the requirements for the absence of pyrogens.

[1] United States Food and Drug Administration. Guidance for industry. Pyrogen and endotoxins testing: questions and answers. Rockville, MD: Food and Drug Administration; June 2012. http://www.fda.gov/downloads/drugs/guidancecomplianceregulatoryinformation/guidances/ucm310098.pdf.

RADIOACTIVE PHARMACEUTICALS

Test Dose for Preformulated, Ready-to-Use Products Labeled with Radioactivity

AGGREGATED ALBUMIN AND OTHER PARTICLE-CONTAINING PRODUCTS

For the rabbit pyrogen test, dilute the product with *Sodium Chloride Injection* to NLT 100 µCi/mL, and inject a dose of 3 mL/kg of body weight into each rabbit.

OTHER PRODUCTS

Where physical half-life of radionuclide is greater than 1 day: Calculate the maximum volume of the product that might be injected into a human subject. This calculation takes into account the maximum recommended radioactive dose of the product, in µCi, and the radioactive assay, in µCi/mL, of the product at its expiration date or time. Using this information, calculate the maximum volume dose per kg to a 70-kg human subject.

For the rabbit pyrogen test, inject a minimum of 10 times this dose per kg of body weight into each rabbit. If necessary, dilute with *Sodium Chloride Injection*. The total injected volume per rabbit is NLT 1 mL and NMT 10 mL of solution.

Where physical half-life of radionuclide is less than 1 day: For products labeled with radionuclides with a half-life of less than 1 day, the dosage calculations are identical to those described in the first paragraph in *Other Products*. These products may be released for distribution prior to completion of the rabbit pyrogen test, but such test must be initiated at NMT 36 h after release.

Test Dose for Pharmaceutical Constituents or Reagents to Be Labeled

The following test dose requirements pertain to reagents that are to be labeled or constituted prior to use by the direct addition of radioactive solutions such as *Sodium Pertechnetate Tc 99m Injection*, i.e., "cold kits".

Assume that the entire contents of the vial of nonradioactive reagent will be injected into a 70-kg human subject, or that $^1/_{70}$ of the total contents per kg will be injected. If the contents are dry, constitute with a measured volume of *Sodium Chloride Injection*.

For the rabbit pyrogen test, inject ($^1/_7$) of the vial contents per kg of body weight into each rabbit. The maximum dose per rabbit is the entire contents of a single vial. The total injected volume per rabbit is NLT 1 mL and NMT 10 mL of solution.

〈161〉 MEDICAL DEVICES—BACTERIAL ENDOTOXIN AND PYROGEN TESTS

INTRODUCTION

The methods and requirements in this chapter apply to assemblies or devices in contact directly or indirectly with the cardiovascular system, the lymphatic system, or cerebrospinal fluid that are labeled sterile and nonpyrogenic. This includes, but may not be limited to the following:

- Fluid pathways of catheters and administration sets such as solution administration sets, extension sets, transfer sets, blood administration sets, intravenous catheters, implants, extracorporeal oxygenator tubings, dialysis tubing, intramuscular drug delivery catheters, and transfusion and infusion assemblies
- Liquid medical devices such as dialysate
- Implantable medical devices such as heart valves and vascular grafts, other medical devices with a nonpyrogenic claim that may come into contact with blood or cerebrospinal fluid
- Gels with a nonpyrogenic claim including demineralized bone matrices and drug delivery systems

BACTERIAL ENDOTOXINS

For the bacterial endotoxins test (BET) assay parameters, procedures, standards and controls for the gel clot and kinetic and endpoint assays, proceed as directed in *Bacterial Endotoxins Test* 〈85〉, substituting the medical device eluate for the product sample.

DEFINITIONS

Endotoxin limit

- The endotoxin limit for the finished device is NMT 20 USP Endotoxin Units per device and NMT 2.15 USP Endotoxin Units for devices in contact with cerebral spinal fluid.
- For devices that directly or indirectly contact the intraocular environment, a lower endotoxin limit may apply.
- The endotoxin limit for the device extract in Endotoxin Units/mL is calculated as:

$$(K \times N)/V$$

K = limit for each device
N = number of devices tested
V = total volume of the extract

Kit: A kit is defined as a collection of individual devices in its primary package, or a variety of related devices. Each individual type of device may have its own product endotoxin limit and should be tested and evaluated on an individual basis [see *Table 1. Selection of Product Units for Testing*—(Reference ANSI/AAMI ST72)].

Table 1. Selection of Product Units for Testing

Product Unit	Item for Testing
Individual medical device in primary package where each medical device is used individually in clinical practice	Individual medical device
Set of components in a primary package where components are assembled as a product and are used together in clinical practice	Combination of components
Number of identical medical devices in one primary package where each medical device is used independently in clinical practice	Single medical device taken from the primary package
Kit of procedure-related medical devices where each medical device is used independently in clinical practice and where each medical device may have a different endotoxin limit	Each type of medical device that has a nonpyrogenic claim, or All items together

Lambda (λ): λ is the test method sensitivity for gel clot methods. For turbidometric or chromogenic technique, λ is equal to the lowest endotoxin concentration on the referenced standard curve.

Product families: Product families for the purposes of BET may be defined on the basis of common materials of construction and/or common components. The choice of family members should be justified and documented. If a product family contains devices of many sizes, the device with the largest surface area claimed to be nonpyrogenic is chosen as the representative member of the family to be used in suitability testing.

Extracting or rinsing solution: *Water for BET* [see ⟨85⟩, *Water for Bacterial Endotoxins Test (BET)*] or other suitable solvent demonstrated to be noninterfering with the BET assay is used to extract or rinse the medical device.

Sampling

1. *Sample*—A sample for end-product testing must be in its final configuration and packaging, including all component parts that make up the final medical device.
2. *Representative sampling*—A representative sample is a sample plan that is created and justified based on the assumption that the manufacturing process is validated and in a state of control.
3. *Sample size*—The number of devices chosen for routine testing is dependent on the size of the lot, level of control, statistical considerations, and historical performance. In most cases, each lot of product must be tested using an appropriate number of samples, NMT 10, taken at random to represent the quality of the lot. Alternate sampling plans that utilize small sample sizes or do not test each lot of product must be clearly defined and must be supported/justified by a robust risk assessment.
4. *Pre-post sterilization samples*—When qualifying a BET assay for pre-sterilization samples, equivalency in test results must be shown with post-sterilization samples to ensure that sterilization and post-sterilization handling have no adverse impact on the accuracy of the test result. Pre-sterilization testing is inappropriate for products that support microbial growth.

Suitability testing (also known as test for interfering factors): Suitability studies of device extracts are designed to assure that the device extract under test does not adversely impact the accuracy of the test result by either a) causing the assay to underestimate endotoxin (inhibition) or b) contributing to overestimation of endotoxin (enhancement).

REAGENTS AND TEST SOLUTIONS

See ⟨85⟩.

PREREQUISITES TO TESTING

Apparatus: All equipment used in the extraction or testing process must be properly qualified and/or calibrated as appropriate. This equipment includes but is not limited to water baths, heat blocks, mechanical pipetters (fixed, adjustable, and repeating pipetters), thermometers, and plate/tube/cartridge readers.

Depyrogenate all glassware and other heat-stable materials in a hot air oven using a validated process. If employing plastic apparatus such as microplates and pipet tips for automatic pipetters, use apparatus that is shown to be free of detectable endotoxin and does not interfere with the test.

Analysts must be properly trained to perform the assay.

The assay sensitivity must be confirmed as described in 〈85〉 sections *Test for Confirmation of Labeled Lysate Sensitivity* for gel clot reagents and *Assurance of Criteria for the Standard Curve* for quantitative methods. Assay sensitivity confirmation must be carried out when a new batch of reagent (lysate or endotoxin) is used or when there is any change in the test conditions that could affect the outcome of the test.

PREPARATION OF DEVICES: STANDARD METHODS

Endotoxin limit: The endotoxin limit for the extracting or rinsing solution is:

$$(K \times N)/V$$

K = amount of endotoxin allowed per device (20 Endotoxin Units per device; 2.15 for intrathecal devices)
N = number of devices tested
V = total volume of the extract or rinse

NOTE—The volume of the rinse or extract may be adjusted for the size and configuration of the device.

The standard extracting fluid for extracting, rinsing, or soaking medical devices is *Water for BET* (see 〈85〉). If necessary, other solvents may be used after it has been demonstrated that they do not interfere with the performance of the assay. Either the entire device if claimed to be nonpyrogenic or all components of the device that are claimed to be nonpyrogenic, including fluid pathways, must come in contact with the extraction fluid for the entire course of the extraction.

The standard extraction method is to soak or immerse the device or flush the fluid pathway with extracting fluid that has been heated to 37 ± 1.0°, keeping the extracting fluid in contact with the relevant surface(s) for NLT 1 h. Alternate extraction or rinsing methods may be used, but must be demonstrated to be equivalent or better than the standard method. Extracts from individual medical devices are typically pooled for testing.

Suitability: Suitability of the BET assay must be demonstrated for each product or product family. The number of batches of product chosen for the suitability study is reflective of the level of control of the process and must be justified.

For the suitability test, medical device extracts are considered to be the sample solutions under test and are tested as outlined in 〈85〉 for the chosen technique in the section *Test for Interfering Factors*.

If necessary, adjust the pH of the solution to be examined (or dilution thereof) so that the pH of the mixture of the lysate and sample solution falls within the pH range specified by the lysate manufacturer, usually pH 6.0–8.0. The pH may be adjusted by use of an acid, base, or suitable buffer as recommended by the lysate manufacturer. Acids and bases may be prepared from concentrates or solids with *Water for BET* (see 〈85〉) in containers free of detectable endotoxin. Buffers must be shown to be free of detectable endotoxin and interfering factors.

If the undiluted rinsing or extracting solution is determined to be unsuitable for 〈85〉, the test for interfering factors may be repeated utilizing dilution, or a method that will neutralize or eliminate the interfering substance.

If glucan interference is suspected, the use of a glucan blocking agent or endotoxin-specific lysate is permissible.

Dilution in *Water for BET* (see 〈85〉) or other validated solvent by a factor not to exceed the maximum valid dilution (MVD) is permissible. The MVD for medical devices is the following:

$$\text{MVD} = \text{Endotoxin limit (of the rinsing or extracting solution in Endotoxin Units/mL)}/\lambda$$

λ = sensitivity of the test method in Endotoxin Units/mL

Interference may be overcome by suitable treatment of the device extract. Methods for overcoming interference and the qualification of such treatments are described in 〈85〉. To establish that the chosen treatment effectively eliminates interference without loss of endotoxins, perform the assay described in 〈85〉 using the preparation to be examined to which standard endotoxin has been added and which has then been submitted to the chosen treatment.

DEMONSTRATION OF CONTINUED SUITABILITY

The continued suitability of the assay should be re-assessed when significant changes are made to the product, process, raw material supply, manufacturing and/or testing site, BET reagent source, or any other change that could adversely affect the accuracy of the BET result. The results of this re-assessment should be documented, and suitability studies re-executed as necessary.

Changes to extraction techniques require a new suitability study. Because of possible changes in interference patterns between standard BET methods, a change in BET methodology (e.g., from gel clot limits test to kinetic chromogenic) requires a re-execution of the suitability study.

Routine testing: Routine testing of the finished medical devices must utilize the same extraction techniques that were documented in the successful suitability study.

General Chapters

Routine testing is to be performed as outlined in ⟨85⟩, following instructions for incubation and controls listed under the chosen assay technique.

Interpretation of test results: Reference ⟨85⟩. The preparation under test complies with the test if the mean endotoxin concentration of the replicates of *Solution A*, after correction for dilution and concentration, is less than 20 Endotoxin Units per medical device (2.15 Endotoxin Units per medical device for those devices that come in contact with the cerebrospinal fluid.)

If a device fails to meet this requirement, an investigation may be initiated per documented procedures. A failed, valid BET assay may not be repeated using *Pyrogen Test* ⟨151⟩ in its place.

PYROGENS

For samples that cannot be tested by BET because of nonremovable inhibition or enhancement of the test, ⟨151⟩ is applied. Select an appropriate number of devices, NMT 10, and obtain a pooled extract, utilizing preparation methods appropriate to the device as directed for bacterial endotoxins, but with volumes of rinse or extraction fluid not to exceed 40 mL of sterile saline TS per device. The requirements of ⟨151⟩ must be met.

REFERENCES

1. ANSI/AAMI ST72: 2011, *Bacterial endotoxins—Test methods, routine monitoring, and alternatives to batch testing.* Association for the Advancement of Medical Instrumentation, Arlington, VA.
2. United States Food and Drug Administration, *Guidance for industry pyrogen and endotoxins testing: questions and answers,* June 2012. http://www.fda.gov/Drugs/GuidanceComplianceRegulatoryInformation/Guidances/ucm314718.htm

General Chapters

⟨162⟩ DIPHTHERIA ANTITOXIN POTENCY TESTING FOR HUMAN IMMUNE GLOBULINS

An in vitro method is provided that is suitable for determining the potency of diphtheria antitoxin (antibodies against the diphtheria toxin) in preparations of plasma-derived human immune globulins. Diphtheria toxin is produced by *Corynebacterium diphtheriae* and has the ability to produce a cytopathogenic effect on susceptible epithelial cell lines. The test is based on the ability of diphtheria antitoxin to neutralize the diphtheria toxin, decreasing its cytotoxic effect. Specifically, the test determines the potency of the diphtheria antitoxin based on its ability to inhibit the cytotoxic effect of diphtheria toxin on cultured Vero cells (African green monkey kidney epithelial cells) relative to a reference standard. The mitochondrial dehydrogenases of live Vero cells can reduce the dye 3-4,5-dimethylthiazol-2-yl)-2,5 diphenyl tetrazolium bromide (MTT) to a blue/black product that is then measured by absorbance at 540 nm. If no or little diphtheria antitoxin is present, then diphtheria toxin induces cell death and the inability of cells to reduce MTT, resulting in the presence of white or colorless wells. Acceptance criteria are defined by the appropriate regulatory agencies.

ASSAY

• **PROCEDURE**

DMEM-5 solution: Dulbecco's Modified Eagle's Medium[1], supplemented to contain 5% fetal bovine serum (FBS), 2 mM L-glutamine, 50 µg/mL of gentamicin, and 2.5 µg/mL of fungizone. [NOTE—Alternatively, a combination of 0.1 mg/mL of kanamycin sulfate, 0.1 units/mL of penicillin, and 0.1 mg/mL of streptomycin can be used in place of gentamicin.]

DMEM-2 solution: Dulbecco's Modified Eagle's Medium[1], supplemented to contain 2% fetal bovine serum (FBS), 2 mM L-glutamine, 50 µg/mL of gentamicin, and 2.5 µg/mL of fungizone. [NOTE—Alternatively, a combination of 0.1 mg/mL of kanamycin sulfate, 0.1 units/mL of penicillin, and 0.1 mg/mL of streptomycin can be used in place of gentamicin.]

MTT solution: 5 mg/mL of MTT in phosphate-buffered saline.[2] Prepare just before use and minimize exposure to room light.

Extraction solution: 0.4 N hydrochloric acid in isopropanol

Toxin test solution: Obtain a liquid preparation of toxin from a culture of *C. diphtheriae*.[3] It may have been rendered sterile by filtration, and sterility may be maintained by the inclusion of a suitable antimicrobial preservative. Store the filtrate in the dark at 2°–8° for several weeks until the activity is considered to be constant, as determined by testing. Dilute the toxin in *DMEM-5 solution* to obtain a suitable *Toxin test solution* that provides a working equivalence with the *Standard solution*. [NOTE—An appropriate *Toxin test solution* may be empirically determined as follows. Titrate the toxin against a fixed concentration of antitoxin (e.g., 0.125 units/mL) using volumes and media as defined below. Determine the lowest concentration of toxin that causes Vero cell toxicity in the presence of the antitoxin concentration chosen. This can be defined as

[1] 11885-092 Life Technologies, or equivalent.
[2] 14190-250 Life Technologies, or equivalent.
[3] Diphtheria toxin code 12/282 from NIBSC or suitable alternative.

LCD/20 (where "LCD" stands for limit of cytotoxic dose, and "/20" refers to 1/20 units/mL = 0.05 units/mL). This is a minimum concentration that should be used in the *Assay*.]

Trypsin–EDTA solution: Dissolve 0.4 g of trypsin, 0.2 g of ethylenediaminetetraacetic acid (EDTA), and 0.85 g of sodium chloride in 100 mL of sterile water. Use cell culture grade and sterile reagents to prepare. Alternatively, a premade sterile preparation may be used.

Cell culture preparation: Prepare Vero cells[4] by culturing in 75-cm² tissue culture flasks in *DMEM-5 solution* at 36 ± 1°, 5% carbon dioxide (CO_2), and a humidified environment. [NOTE—Alternative flask sizes may be used by adjusting the volumes used below.] After 2–3 days of growth, the medium may be replaced by *DMEM-2 solution*, with growth allowed to continue. When the cells have reached a confluent monolayer, discard the culture media. Wash the cell layer by pipetting 5 mL of *Trypsin–EDTA solution* into the flask and gently rocking the flask back and forth for approximately 30 s. Remove and discard the *Trypsin–EDTA solution*. Add an additional 5 mL of *Trypsin–EDTA solution*, and gently rock back and forth for 1 min. Remove and discard all but 1 mL. Incubate at 36 ± 1°, 5% carbon dioxide (CO_2), in a humidified environment for approximately 10 min or until the cell sheet begins to slough from the flask, and tap the flask to release the cells. Add 10 mL of *DMEM-5 solution* to the trypsinized cells, count the cells, and adjust the cell suspension to 1×10^5 cells/mL in the same medium.

Standard solutions: In sterile tubes, prepare four concentrations of the standard by diluting U.S. Standard Diphtheria Antitoxin[5] with *DMEM-2 solution* to 1 unit/mL, followed by serial dilutions in the same media that result in the additional concentrations of 0.5, 0.25, and 0.1 units/mL.

Sample solutions: In sterile tubes, dilute each human immune globulin test sample to 1.25% protein with *DMEM-2 solution*. Using the diluted sample, further dilute the samples in *DMEM-2 solution* to achieve an expected diphtheria antitoxin concentration that is within the range of the *Standard solutions* (i.e., 1 to 0.1 units/mL).

Analysis

Samples: *Toxin test solution*, *Standard solutions*, and *Sample solutions*

Test each *Standard solution* or *Sample solution* in duplicate. Label 96 well culture plates by marking off the 8-well columns in groups of two; all four *Standard solutions* and one *Sample solution* can be tested per plate. As described below, columns 11 and 12 can be used for the untreated cell control and the toxin control, respectively. [NOTE—Alternative plate layouts maintaining the dilutions can be used.] Add 112.5 µL of *DMEM-2 solution* to each well in row A, columns 1–10 only (these are standard- or sample-nonspecific toxicity controls). Add 75 µL of *DMEM-2 solution* to each well in rows B–H, columns 1–10 only.

Add 37.5 µL of a *Standard solution* dilution or a *Sample solution* to wells A1–A2, and add 75 µL of the same solution to wells B1–B2. Add 37.5 µL of a second *Standard solution* dilution or *Sample solution* to wells A3–A4, and add 75 µL of the same solution to wells B3–B4. Continue to make similar additions of *Standard solution* dilutions or *Sample solutions* to each group of two columns in columns 1–10. Make two-fold serial dilutions by transferring 75 µL from each well in row B to each well in row C of the same column. Mix and then continue transferring 75 µL in the same manner down each column. Discard the last 75 µL after mixing row H. Add 75 µL of the *Toxin test solution* to rows B–H in columns 1–10. Add 150 µL of *DMEM-2 solution* to all wells in column 11 (cell control), and add 75 µL of *DMEM-2 solution* plus 75 µL of *Toxin test solution* to all wells in column 12 (toxin control).

Cover the plates, and incubate them for 1 h at 36 ± 1°, at 5% carbon dioxide (CO_2), and in a humidified environment. Add 150 µL of cell suspension to all wells, cover the plates, and incubate them at 36 ± 1°, at 5% carbon dioxide (CO_2), and in a humidified environment. Incubate for 4–5 days, checking periodically for microbial contamination by microscopic examination. Once toxicity control wells in row A containing the lowest concentration of a *Standard solution* are nearly confluent, add 15 µL of *MTT solution* to each well. Cover the plates, and incubate them in the carbon dioxide (CO_2) incubator at 37° for 3 h. Discard the medium, and add 150 µL of *Extraction solution* to each well. Cover the plates, and place aluminum foil over them to minimize light exposure. Shake gently to solubilize the blue formazan formed by viable cells. Using a suitable plate reader, read the absorbance of each well at a wavelength of 540 nm.

Calculation: The cutoff dilution is the highest dilution in which there are still viable cells in the well but beyond which there are no viable cells. Cutoff dilution is defined by a corresponding absorbance (Abs). [NOTE—The average absorbance value can be calculated for the cell control wells in column 11 and divided by 2 to obtain a 50% control Abs value. This value can be used to determine cutoff dilutions. The cutoff dilution for each *Standard solution* and *Sample solution* can therefore be defined as the highest dilution where the Abs value is greater than the 50% control Abs value.] Determine the cutoff dilutions for each *Standard solution* and *Sample solution*. Plot the cutoff dilutions obtained for all *Standard solutions* (expressed as the reciprocal of the cutoff dilution) versus U.S. Standard Diphtheria Antitoxin units. Calculate a linear regression line from the data. Calculate the geometric mean for the four cutoff dilutions associated with each *Sample solution*. Compare the mean cutoff dilution to the linear regression of the *Standard solution* data to determine a titer, in units/mL, for each *Sample solution*. To obtain the final potency value for the *Sample solution*, multiply the titer by any dilution that was made to the *Sample solution* prior to the *Assay*.

System suitability: The correlation coefficient of the standard curve must be >0.995. The slope of the standard curve must be between 26 and 38. The test is valid if the cells in wells of row A, columns 1–10, appear normal and similar to the cell

[4] American Type Culture Collection CCL-81.

[5] Use appropriate U.S. Standard Diphtheria Antitoxin as designated by the Center for Biologics Evaluation and Research, Food and Drug Administration.

control wells in column 11. In addition, the cutoff dilution values for *Standard solution* and *Sample solution* replicates should be within one serial dilution of each other, and the cutoff dilution must be within the range of the *Sample solution* serial dilutions.

Add the following:

▲⟨165⟩ PREKALLIKREIN ACTIVATOR

DEFINITION

Prekallikrein activator (PKA), also known as Factor XIIa, activates prekallikrein to kallikrein. Activated kallikrein cleaves kininogens into kinins (e.g., bradykinin) that can result in a loss of blood pressure. PKA is assayed by its ability to activate prekallikrein, which once activated cleaves a synthetic peptide substrate and releases a chromophore that can be measured spectrophotometrically. The amount of PKA is determined by comparison with reference standard material. The procedure presented in this chapter traditionally has been used to determine the amount of PKA in human plasma derivatives such as albumin and immunoglobulin preparations.

Some immunoglobulin preparations may contain kallikrein or kallikrein-like activity in the absence of the added prekallikrein substrate, resulting in turnover of the synthetic peptide substrate. If present, this kallikrein or kallikrein-like activity requires consideration when analysts verify the assay for suitability under the conditions of use. Some questions to consider when verifying the assay for suitability under the conditions of use include:

- Are sample matrix effects observed?
- Is the appropriate statistical model used for data analysis?
- Is an endpoint analysis sufficient, or is a kinetic analysis needed?

(For informational purposes only, refer to sections 2, 4, and 5 of *Design and Development of Biological Assays* ⟨1032⟩ when considering assay fitness for use.)

ASSAY

• **Prekallikrein Assay**

Buffer A: Prepare a solution of 0.05 M tris(hydroxymethyl)aminomethane and 0.15 M sodium chloride. Adjust with 2 N hydrochloric acid to a pH of 7.95–8.05.

Buffer B: Prepare a solution of 1.0 M tris(hydroxymethyl)aminomethane. Adjust with 2 N hydrochloric acid to a pH of 7.95–8.05.

Solution A: Prepare a solution of 0.33 N hydrochloric acid.

Solution B: Prepare a solution of 0.33 N sodium hydroxide.

Solution C: Prepare a solution of 50% acetic acid.

Chromogenic substrate solution: Prepare a solution of a suitable chromogenic substrate for amidolytic test specific for kallikrein in *Buffer A* to obtain a solution having a concentration of about 1.2 mM.

Prekallikrein substrate: Use a suitable *Prekallikrein substrate*. Test the *Prekallikrein substrate* for the absence of kallikrein activity by mixing 1 part with 20 parts of the *Chromogenic substrate solution* prewarmed at 37°, and incubate at 37° for 2 min. The substrate is suitable if the increase in absorbance at 405 nm is less than 0.001/min. [Note—To remove proteinase inhibitor contamination from the *Prekallikrein substrate*, acid treatment of the prekallikrein should be performed individually on each sample before use.] If frozen, thaw *Prekallikrein substrate* at 35°–39°. Add 2.0 mL of *Solution A* to 4 mL of *Prekallikrein substrate*, and incubate for 15 min at 23°–25°. Bring pH back to neutrality with 2.0 mL of *Solution B*. Add 200 µL of *Buffer B*, and store at room temperature for NMT 4 h.

Standard solutions: Dissolve the contents of a vial of USP Prekallikrein Activator RS in 0.5 mL of water. Dilute USP Prekallikrein Activator RS with *Buffer A* (1:5). Make five evenly spaced *Standard solutions* between 0 and 8.5 IU/mL.

Sample solution: Dilute sample appropriately to fall within the range of the standard dilutions with *Buffer A* performing at minimum (1:1).

System suitability

Samples: *Buffer A* and *Standard solutions*

Suitability requirements

Assay range: If the absorbance value of a sample is higher than the highest value of the standard curve, dilute the sample with *Buffer A* and repeat the *Assay*. If the absorbance of a sample is lower than the *Assay* limit of detection, the activity should be reported as less than the limit of detection.

Correlation coefficient: NLT 0.99

Analysis

Samples: *Buffer A, Standard solutions*, and *Sample solution*

[Note—This procedure also can be performed using alternative platforms. Care must be taken to minimize the time between the addition of *Prekallikrein substrate* to the *Standard solutions* and the *Sample solution* because some degradation of the *Prekallikrein substrate* can occur with time when thawed.]

To four separate individual wells of a suitable microtiter plate transfer 25 µL of either the *Standard solutions* or the *Sample solution*. Incubate the microtiter plate for 2–3 min at 35°–39°. Start to prewarm *Buffer A*, the *Prekallikrein substrate*, and the *Chromogenic substrate solution* at 35°–39°. For each *Standard solution* and *Sample solution*, in two of the four wells add 100-µL *Buffer A* and to the other two wells add 100-µL prewarmed *Prekallikrein substrate*; incubate at 35°–39° for 10 min. Add 125 µL of prewarmed *Chromogenic substrate solution* to all wells in the same order as the *Buffer A* and *Prekallikrein substrate* additions, and incubate at 35°–39° for 20 min. Stop the reactions with 50 µL of *Solution C*, and mix well. Read absorbance of each well of the plate at 405 nm within 2 h. Subtract the average A_{405} of the two wells containing *Buffer A* for each *Standard solution* and *Sample solution* to give the corrected A_{405} values. Using the least-squares method of linear regression, generate a standard curve from the activities of the *Standard solutions* (IU/mL) and their corresponding corrected absorbance values. Calculate prekallikrein activities of samples from the calibration curve of the standards. To obtain the corrected activity in IU/mL, multiply each activity by the sample's dilution factor.

ADDITIONAL REQUIREMENTS

- **USP Reference Standards 〈11〉**

USP Prekallikrein Activator RS

▲USP40

〈171〉 VITAMIN B_{12} ACTIVITY ASSAY

ASSAY

- **Procedure**

Assay preparation: Place a suitable quantity of the material to be assayed, previously reduced to a fine powder if necessary and accurately measured or weighed, in an appropriate vessel containing, for each g or mL of material taken, 25 mL of an aqueous extracting solution prepared just prior to use to contain, in each 100 mL, 1.29 g of disodium phosphate, 1.1 g of anhydrous citric acid, and 1.0 g of sodium metabisulfite. Autoclave the mixture at 121° for 10 minutes. Allow any undissolved particles of the extract to settle, and filter or centrifuge, if necessary. Dilute an aliquot of the clear solution with water so that the final test solution contains vitamin B_{12} activity approximately equivalent to that of the *Standard cyanocobalamin solution* which is added to the assay tubes.

Standard cyanocobalamin stock solution: To a suitable quantity of USP Cyanocobalamin RS, accurately weighed, add sufficient 25 percent alcohol to make a solution having a known concentration of 1.0 µg of cyanocobalamin per mL. Store in a refrigerator.

Standard cyanocobalamin solution: Dilute a suitable volume of *Standard cyanocobalamin stock solution* with water to a measured volume such that after the incubation period as described for *Procedure*, the difference in transmittance between the inoculated blank and the 5.0-mL level of the *Standard cyanocobalamin solution* is not less than that which corresponds to a difference of 1.25 mg in dried cell weight. This concentration usually falls between 0.01 ng and 0.04 ng per mL of *Standard cyanocobalamin solution*. Prepare a fresh standard solution for each assay.

Basal medium stock solution: Prepare the medium according to the following formula and directions. A dehydrated mixture containing the same ingredients may be used provided that, when constituted as directed in the labeling, it yields a medium comparable to that obtained from the formula given herein.

Add the ingredients in the order listed, carefully dissolving the cystine and tryptophane in the hydrochloric acid before adding the next eight solutions in the resulting solution. Add 100 mL of water, mix, and dissolve the dextrose, sodium acetate, and ascorbic acid. Filter, if necessary, add the polysorbate 80 solution, adjust the solution to a pH between 5.5 and 6.0 with 1 N sodium hydroxide, and add purified water to make 250 mL.

L-Cystine	0.1 g
L-Tryptophane	0.05 g
1 *N* Hydrochloric Acid	10 mL
Adenine–Guanine–Uracil Solution	5 mL
Xanthine Solution	5 mL
Vitamin Solution I	10 mL
Vitamin Solution II	10 mL
Salt Solution A	5 mL
Salt Solution B	5 mL
Asparagine Solution	5 mL
Acid-hydrolyzed Casein Solution	25 mL

Dextrose, Anhydrous	10 g
Sodium Acetate, Anhydrous	5 g
Ascorbic Acid	1 g
Polysorbate 80 Solution	5 mL

Acid-hydrolyzed casein solution: Prepare as directed under *Calcium Pantothenate Assay* ⟨91⟩.

Asparagine solution: Dissolve 2.0 g of L-asparagine in water to make 200 mL. Store under toluene in a refrigerator.

Adenine–guanine–uracil solution: Prepare as directed under *Calcium Pantothenate Assay* ⟨91⟩.

Xanthine solution: Suspend 0.20 g of xanthine in 30 mL to 40 mL of water, heat to about 70°, add 6.0 mL of 6 N ammonium hydroxide, and stir until the solid is dissolved. Cool, and add water to make 200 mL. Store under toluene in a refrigerator.

Salt solution A: Dissolve 10 g of monobasic potassium phosphate and 10 g of dibasic potassium phosphate in water to make 200 mL. Add 2 drops of hydrochloric acid, and store under toluene.

Salt solution B: Dissolve 4.0 g of magnesium sulfate, 0.20 g of sodium chloride, 0.20 g of ferrous sulfate, and 0.20 g of manganese sulfate in water to make 200 mL. Add 2 drops of hydrochloric acid, and store under toluene.

Polysorbate 80 solution: Dissolve 20 g of polysorbate 80 in alcohol to make 200 mL. Store in a refrigerator.

Vitamin solution I: Dissolve 10 mg of riboflavin, 10 mg of thiamine hydrochloride, 100 µg of biotin, and 20 mg of niacin in 0.02 N glacial acetic acid to make 400 mL. Store, protected from light, under toluene in a refrigerator.

Vitamin solution II: Dissolve 20 mg of para-aminobenzoic acid, 10 mg of calcium pantothenate, 40 mg of pyridoxine hydrochloride, 40 mg of pyridoxal hydrochloride, 8 mg of pyridoxamine dihydrochloride, and 2 mg of folic acid in dilute neutralized alcohol (1 in 4) to make 400 mL. Store, protected from light, in a refrigerator.

Tomato juice preparation: Centrifuge commercially canned tomato juice so that most of the pulp is removed. Suspend about 5 g per L of analytical filter-aid in the supernatant, and filter, with the aid of reduced pressure, through a layer of the filter-aid. Repeat, if necessary, until a clear, straw-colored filtrate is obtained. Store under toluene in a refrigerator.

Culture medium: [NOTE—A dehydrated mixture containing the same ingredients may be used provided that, when constituted as directed in the labeling, it yields a medium equivalent to that obtained from the formula given herein.] Dissolve 0.75 g of water-soluble yeast extract, 0.75 g of dried peptone, 1.0 g of anhydrous dextrose, and 0.20 g of potassium biphosphate in 60 mL to 70 mL of water. Add 10 mL of *Tomato juice preparation* and 1 mL of *Polysorbate 80 solution*. Adjust the solution with 1 N sodium hydroxide to a pH of 6.8, and add water to make 100 mL. Place 10-mL portions of the solution in test tubes, and plug with cotton. Sterilize the tubes and contents in an autoclave at 121° for 15 minutes. Cool as rapidly as possible to avoid color formation resulting from overheating the medium.

Suspension medium: Dilute a measured volume of *Basal medium stock solution* with an equal volume of water. Place 10-mL portions of the diluted medium in test tubes. Sterilize, and cool as directed above for the *Culture medium*.

Stock culture of *Lactobacillus leichmannii*: To 100 mL of *Culture medium* add 1.0 g to 1.5 g of agar, and heat the mixture, with stirring, on a steam bath, until the agar dissolves. Place approximately 10-mL portions of the hot solution in test tubes, cover the tubes suitably, sterilize at 121° for 15 minutes in an autoclave (exhaust line temperature), and allow the tubes to cool in an upright position. Inoculate three or more of the tubes, by stab transfer of a pure culture of *Lactobacillus leichmannii*.* (Before first using a fresh culture in this assay, make not fewer than 10 successive transfers of the culture in a 2-week period.) Incubate 16 to 24 hours at any selected temperature between 30° and 40° but held constant to within ±0.5°, and finally store in a refrigerator.

Prepare fresh stab cultures at least three times each week, and do not use them for preparing the inoculum if more than 4 days old. The activity of the microorganism can be increased by daily or twice-daily transfer of the stab culture, to the point where definite turbidity in the liquid inoculum can be observed 2 to 4 hours after inoculation. A slow-growing culture seldom gives a suitable response curve, and may lead to erratic results.

Inoculum: [NOTE—A frozen suspension of *Lactobacillus leichmannii* may be used as the stock culture, provided it yields an inoculum comparable to a fresh culture.] Make a transfer of cells from the *Stock culture of Lactobacillus leichmannii* to 2 sterile tubes containing 10 mL of the *Culture medium* each. Incubate these cultures for 16 to 24 hours at any selected temperature between 30° and 40° but held constant to within ±0.5°. Under aseptic conditions, centrifuge the cultures, and decant the supernatant. Suspend the cells from the culture in 5 mL of sterile *Suspension medium*, and combine. Using sterile *Suspension medium*, adjust the volume so that a 1 in 20 dilution in saline TS produces 70% transmittance when read on a suitable spectrophotometer that has been set at a wavelength of 530 nm, equipped with a 10-mm cell, and read against saline TS set at 100% transmittance. Prepare a 1 in 400 dilution of the adjusted suspension using *Basal medium stock solution*, and use it for the test inoculum. (This dilution may be altered, when necessary, to obtain the desired test response.)

Calibration of spectrophotometer: Check the wavelength of the spectrophotometer periodically, using a standard wavelength cell or other suitable device. Before reading any tests, calibrate the spectrophotometer for 0% and 100% transmittance, using water and with the wavelength set at 530 nm.

Procedure: Cleanse meticulously by suitable means, followed preferably by heating at 250° for 2 hours, hard-glass test tubes, about 20 mm × 150 mm in size, and other necessary glassware because of the high sensitivity of the test organism to minute amounts of vitamin B_{12} activity and to traces of many cleansing agents.

* Pure cultures of *Lactobacillus leichmannii* may be obtained as No. 7830 from the American Type Culture Collection, 10801 University Blvd., Manassas, VA 20110.

To test tubes add, in duplicate, 1.0 mL, 1.5 mL, 2.0 mL, 3.0 mL, 4.0 mL, and 5.0 mL, respectively, of the *Standard cyanocobalamin solution*. To each of these tubes and to four similar empty tubes add 5.0 mL of *Basal medium stock solution* and water to make 10 mL.

To similar test tubes add, in duplicate, respectively, 1.0 mL, 1.5 mL, 2.0 mL, 3.0 mL, and 4.0 mL of the *Assay preparation*. To each tube add 5.0 mL of *Basal medium stock solution* and water to make 10 mL. Place one complete set of standard and assay tubes together in one tube rack and the duplicate set in a second rack or section of a rack, preferably in random order.

Cover the tubes suitably to prevent bacterial contamination, and sterilize the tubes and contents in an autoclave at 121° for 5 minutes, arranging to reach this temperature in not more than 10 minutes by preheating the autoclave, if necessary. Cool as rapidly as practicable to avoid color formation resulting from overheating the medium. Take precautions to maintain uniformity of sterilizing and cooling conditions throughout the assay, since packing tubes too closely in the autoclave, or overloading it, may cause variation in the heating rate.

Aseptically add 0.5 mL of *Inoculum* to each tube so prepared, except two of the four containing no *Standard cyanocobalamin solution* (the uninoculated blanks). Incubate the tubes at a temperature between 30° and 40° held constant to within ±0.5°, for 16 to 24 hours.

Terminate growth by heating to a temperature not lower than 80° for 5 minutes. Cool to room temperature. After agitating its contents, place the container in a spectrophotometer that has been set at a wavelength of 530 nm, and read the transmittance when a steady state is reached. This steady state is observed a few seconds after agitation when the reading remains constant for 30 seconds or more. Allow approximately the same time interval for the reading on each tube.

With the transmittance set at 100% for the uninoculated blank, read the transmittance of the inoculated blank. If the difference is greater than 5% or if there is evidence of contamination with a foreign microorganism, disregard the results of the assay.

With the transmittance set at 100% for the uninoculated blank, read the transmittance of each of the remaining tubes. Disregard the results of the assay if the slope of the standard curve indicates a problem with sensitivity.

Calculation: Prepare a standard concentration-response curve by the following procedure. Test for and replace any aberrant individual transmittances. For each level of the standard, calculate the response from the sum of the duplicate values of the transmittances (Σ) as the difference, $y = 2.00 - \Sigma$. Plot this response on the ordinate of cross-section paper against the logarithm of the mL of *Standard cyanocobalamin solution* per tube on the abscissa, using for the ordinate either an arithmetic or a logarithmic scale, whichever gives the better approximation to a straight line. Draw the straight line or smooth curve that best fits the plotted points.

Calculate the response, y, adding together the two transmittances for each level of the *Assay preparation*. Read from the standard curve the logarithm of the volume of the *Standard preparation* corresponding to each of those values of y that falls within the range of the lowest and highest points plotted for the standard. Subtract from each logarithm so obtained the logarithm of the volume, in mL, of the *Assay preparation* to obtain the difference, x, for each dosage level. Average the values of x for each of three or more dosage levels to obtain $\bar{x} = M'$, the log-relative potency of the *Assay preparation*. Determine the quantity, in µg, of USP Cyanocobalamin RS corresponding to the cyanocobalamin in the portion of material taken for assay by the equation:

$$\text{antilog } M = \text{antilog } (M' + \log R)$$

R = number of µg of cyanocobalamin that was assumed to be present in each mg (or capsule or tablet) of the material taken for assay

Replication: Repeat the entire determination at least once, using separately prepared *Assay preparations*. If the difference between the two log potencies M is not greater than 0.08, their mean, $\overline{M}$, is the assayed log-potency of the test material (see *Vitamin B_{12} Activity Assay* under *Design and Analysis of Biological Assays* 〈111〉). If the two determinations differ by more than 0.08, conduct one or more additional determinations. From the mean of two or more values of *M* that do not differ by more than 0.15, compute the mean potency of the preparation under assay.

ADDITIONAL REQUIREMENTS

- **USP Reference Standards** 〈11〉

  USP Cyanocobalamin RS

General Chapters

Chemical Tests and Assays

IDENTIFICATION TESTS

⟨181⟩ IDENTIFICATION—ORGANIC NITROGENOUS BASES

INTRODUCTION

The purpose of this test is the identification of tertiary amine compounds. This spectroscopic test has a limited degree of specificity and, therefore, the conformance with all additional identification tests listed in a particular monograph is necessary to ensure the identity of the specimen under examination.

ASSAY

- **Procedure**

Standard solution: In a separator dissolve 50 mg of the corresponding USP Reference Standard in 25 mL of 0.01 N hydrochloric acid.

Sample solution: Depending upon the nature of the sample, dissolve 50 mg of the bulk substance under test in 25 mL of 0.01 N hydrochloric acid, or shake a quantity of powdered tablets or the contents of capsules, equivalent to 50 mg of the substance, with 25 mL of 0.01 N hydrochloric acid for 10 min. Transfer the liquid to a separator, filtering if necessary, and washing the filter and the residue with several small portions of water.

Instrumental conditions

(See *Mid-Infrared Spectroscopy* ⟨854⟩.)

Mode: IR

Wavelength range: 7–15 µm (1430 cm^{-1} to 650 cm^{-1})

Cell: 1-mm

Blank: Carbon disulfide

Analysis

Samples: *Standard solution* and *Sample solution*

Treat each solution as follows: Add 2 mL of 1 N sodium hydroxide and 4 mL of carbon disulfide, and shake for 2 min. Centrifuge if necessary to clarify the lower phase, and pass it through a dry filter, collecting the filtrate in a small flask provided with a glass stopper. Determine the absorption spectra of the filtered *Standard solution* and *Sample solution* without delay.

Acceptance criteria: The spectrum of the *Sample solution* must show all of the significant absorption bands present in the spectrum of the *Standard solution.*

⟨191⟩ IDENTIFICATION TESTS—GENERAL

(Chapter to become official May 1, 2017)

INTRODUCTION

Procedures in this chapter are referenced in monographs for the identification of official articles and their components. Any acids, bases, or other reagents used in these procedures should not interfere with the results. Volumes may be scaled proportionally unless otherwise indicated. All of the tests include approximate amounts, except where specified.

Instrumental techniques described in this chapter may be used in lieu of chemical identification tests. Those instrumental techniques are not exhaustive and other techniques, such as nuclear magnetic resonance, ion-selective electrodes, and near-infrared, may be used in lieu of a chemical identification test provided that they are suitable and validated.

Unless otherwise specified in the monograph, if a chemical identification test is selected for an ion, then all chemical test procedures listed for the ion shall be met. If an instrumental identification test is selected, then only one instrumental technique is required for the ion(s).

CHEMICAL IDENTIFICATION TESTS

Acetate

- **A.** Dissolve about 30 mg of the substance to be examined in 3 mL of water, or use 3 mL of the prescribed solution. Adjust the pH of the solution with sodium hydroxide to be slightly alkaline. Add 0.25 mL of lanthanum nitrate test solution (TS). If a white precipitate is formed, filter the solution. Add successively 0.1 mL of iodine, and potassium iodide TS 3, and 0.1 mL

of ammonia TS 2 to the solution. If no blue color is observed, heat carefully to boiling. In the presence of acetates, a dark color develops or a blue precipitate is formed.

- **B.** With neutral solutions of acetates, ferric chloride TS produces a red color that is destroyed by the addition of mineral acids.

Aluminum

- **A.** By using 6 N ammonium hydroxide, solutions of aluminum salts yield a gelatinous, white precipitate that is insoluble in an excess of 6 N ammonium hydroxide.
- **B.** 1 N sodium hydroxide or sodium sulfide TS with solutions of aluminum salts produces a similar gelatinous, white precipitate, which dissolves in an excess of either of the same reagents.

Ammonium

- **A.** Add 0.2 g of magnesium oxide to the solution under test. Pass a current of air through the mixture, and direct the gas that escapes to just beneath the surface of the indicator solution prepared previously by mixing 1 mL of 0.1 M hydrochloric acid and 0.05 mL of methyl red TS 2. In the presence of ammonium, the color of the indicator solution is changed to yellow. After directing the gas into the indicator solution for a sufficient period of time, add 1 mL of freshly prepared sodium cobaltinitrite TS to the indicator solution. Upon the addition of the sodium cobaltinitrite TS, a yellow precipitate is formed when ammonium is present.

Antimony

- **A.** With hydrogen sulfide, solutions of antimony(III) compounds, strongly acidified with hydrochloric acid, yield an orange precipitate of antimony sulfide that is insoluble in 6 N ammonium hydroxide but is soluble in ammonium sulfide TS.

Barium

- **A.** Solutions of barium salts yield a white precipitate with the addition of 2 N sulfuric acid. This precipitate is insoluble in hydrochloric acid and in nitric acid.

Benzoate

- **A.** In neutral solutions, benzoates yield a salmon-colored precipitate with ferric chloride TS.
- **B.** In moderately concentrated solutions, benzoates yield a precipitate of benzoic acid upon acidification when 2 N sulfuric acid is added. This precipitate is readily soluble in ethyl ether.

Bicarbonate

- **A.** Bicarbonates effervesce with acids, evolving a colorless gas that, when passed into calcium hydroxide TS, produces a white precipitate immediately.
- **B.** A cold solution (1:20) of a soluble bicarbonate or the solution prescribed in the specific monograph remains unchanged or is only slightly colored by phenolphthalein TS.

Bismuth

- **A.** When dissolved in a slight excess of nitric acid or hydrochloric acid, bismuth salts yield a white precipitate upon dilution with water. This precipitate is colored brown by hydrogen sulfide, and the resulting compound dissolves in a warm mixture of equal parts of nitric acid and water.

Bisulfite *Sulfite.*

Borate

- **A.** To 1 mL of a borate solution acidified with hydrochloric acid, add 3 or 4 drops of iodine TS and 3 or 4 drops of polyvinyl alcohol solution (1:50): an intense blue color is produced.

Bromide

- **A.** Solutions of bromides, upon the addition of chlorine TS dropwise, liberate bromine, which is dissolved by shaking with chloroform, coloring the chloroform red-to-reddish brown.
- **B.** Silver nitrate TS produces, in solutions of bromides, a yellowish-white precipitate that is insoluble in nitric acid and is slightly soluble when 6 N ammonium hydroxide is added.

Calcium

- **A.** Solutions of calcium salts form insoluble oxalates when treated as follows. To a solution of the calcium salt (1:20) or the solution prescribed in the specific monograph, add 2 drops of methyl red TS and neutralize with 6 N ammonium hydroxide. Add 3 N hydrochloric acid dropwise, until the solution is acid to the indicator. Upon the addition of ammonium oxalate TS, a white precipitate is formed. This precipitate is insoluble when 6 N acetic acid is added but dissolves in hydrochloric acid.

Carbonate

- **A.** Carbonates effervesce with acids, evolving a colorless gas that, when passed into calcium hydroxide TS, produces a white precipitate immediately.
- **B.** A cold solution (1:20) of a soluble carbonate or the solution prescribed in the specific monograph is colored red by phenolphthalein TS, whereas a similar solution of a bicarbonate remains unchanged or is only slightly colored.

Chlorate

- **A.** Solutions of chlorates yield no precipitate with silver nitrate TS. The addition of sulfurous acid to this mixture produces a white precipitate that is insoluble in nitric acid but is soluble in 6 N ammonium hydroxide.
- **B.** Upon ignition, chlorates yield chlorides, recognizable by appropriate tests.
- **C.** When sulfuric acid is added to a dry chlorate, decrepitation occurs and a greenish-yellow gas is evolved. [**CAUTION**—Use only a small amount of chlorate for this test, and exercise extreme caution in performing it.]

Chloride

- **A.** With silver nitrate TS, solutions of chlorides yield a white, curdy precipitate that is insoluble in nitric acid but is soluble in a slight excess of 6 N ammonium hydroxide.
- **B.** When testing amine (including alkaloidal) hydrochlorides that do not respond to the above test, add 1 drop of diluted nitric acid and 0.5 mL of silver nitrate TS to a solution of the substance being examined containing, unless otherwise directed in the monograph, about 2 mg of chloride ion in 2 mL: a white, curdy precipitate is formed. Centrifuge the mixture without delay, and decant the supernatant layer. Wash the precipitate with three 1-mL portions of nitric acid solution (1:100), and discard the washings. Add ammonia TS dropwise to this precipitate. It dissolves readily.
- **C.** When a monograph specifies that an article responds to the test for dry chlorides, mix the solid to be tested with an equal weight of manganese dioxide, moisten with sulfuric acid, and gently heat the mixture: chlorine, which is recognizable by the production of a blue color with moistened starch iodide paper, is evolved.

Citrate

- **A.** To 15 mL of pyridine add a solution or suspension of a few mg of a citrate salt in 1 mL of water or the solution prescribed in the specific monograph, and shake. To this mixture add 5 mL of acetic anhydride, and shake: a light red color is produced.

Cobalt

- **A.** Solutions of cobalt salts (1:20) in 3 N hydrochloric acid or the solution prescribed in the specific monograph yield a red precipitate when heated on a steam bath with an equal volume of a hot, freshly prepared solution of 1-nitroso-2-naphthol (1:10) in 9 N acetic acid.
- **B.** Solutions of cobalt salts, when saturated with potassium chloride and treated with potassium nitrite and acetic acid, yield a yellow precipitate.

Copper

- **A.** Cupric compounds, acidified with hydrochloric acid, deposit a red film of metallic copper upon a bright, untarnished surface of metallic iron.
- **B.** An excess of 6 N ammonium hydroxide, when added to a solution of a cupric salt, produces first a bluish precipitate and then a deep blue-colored solution.
- **C.** With potassium ferrocyanide TS, solutions of cupric salts yield a reddish-brown precipitate, insoluble in diluted acids.

Hypophosphite

- **A.** Hypophosphites in solution yield a white precipitate with mercuric chloride TS. This precipitate becomes gray when an excess of hypophosphite is present.
- **B.** Solutions of hypophosphites, acidified with sulfuric acid and warmed with cupric sulfate TS, yield a red precipitate.

Iodide

- **A.** Solutions of iodides, upon the addition of chlorine TS dropwise, liberate iodine, which colors the solution from yellow to red. When the solution is shaken with chloroform, the solution is colored violet. The iodine thus liberated gives a blue color with starch TS.
- **B.** Silver nitrate TS produces, in solutions of iodides, a yellow, curdy precipitate that is insoluble in nitric acid and insoluble in 6 N ammonium hydroxide.

Iron

- **A.** Ferrous and ferric compounds in solution yield a black precipitate with ammonium sulfide TS. This precipitate dissolves in cold, 3 N hydrochloric acid and evolves hydrogen sulfide.

Ferric salts

- **A.** Acid solutions of ferric salts yield a dark blue precipitate with potassium ferrocyanide TS.
- **B.** With an excess of 1 N sodium hydroxide added to the ferric salts solutions, a reddish-brown precipitate is formed.
- **C.** With ammonium thiocyanate TS, solutions of ferric salts produce a deep red color that is not destroyed by dilute mineral acids.

Ferrous salts

- **A.** Solutions of ferrous salts yield a dark blue precipitate with potassium ferricyanide TS. This precipitate is insoluble in 3 N hydrochloric acid but is decomposed by 1 N sodium hydroxide.
- **B.** With 1 N sodium hydroxide, solutions of ferrous salts yield a greenish-white precipitate; when shaken, the color changes rapidly to green and then to brown.

Lactate

- **A.** When solutions of lactates are acidified with sulfuric acid, potassium permanganate TS is added; the mixture is heated, and acetaldehyde evolves. Acetaldehyde can be detected by allowing the vapor to come into contact with a filter paper that has been moistened with a freshly prepared mixture of equal volumes of 20% aqueous morpholine and sodium nitroferricyanide TS: a blue color is produced.

Lead

- **A.** With 2 N sulfuric acid, solutions of lead salts yield a white precipitate that is insoluble in 3 N hydrochloric or 2 N nitric acid but is soluble in warm 1 N sodium hydroxide and in ammonium acetate TS.
- **B.** With potassium chromate TS, solutions of lead salts, free or nearly free from mineral acids, yield a yellow precipitate that is insoluble in 6 N acetic acid but is soluble in 1 N sodium hydroxide.

Lithium

- **A.** With sodium carbonate TS, moderately concentrated solutions of lithium salts, made alkaline with sodium hydroxide, yield a white precipitate on boiling. The precipitate is soluble in ammonium chloride TS.
- **B.** Solutions of lithium salts are not precipitated by 2 N sulfuric acid or soluble sulfates (distinction from strontium).

Magnesium

- **A.** Solutions of magnesium salts in the presence of ammonium chloride yield not more than a slightly hazy precipitate when neutralized with ammonium carbonate TS, but on the subsequent addition of dibasic sodium phosphate TS, a white, crystalline precipitate, which is insoluble in 6 N ammonium hydroxide, is formed.

Manganese

- **A.** With ammonium sulfide TS, solutions of manganous salts yield a salmon-colored precipitate that dissolves in acetic acid.

Mercury

- **A.** When applied to bright copper foil, solutions of mercury salts, free from an excess of nitric acid, yield a deposit that, upon rubbing, becomes bright and silvery in appearance.
- **B.** With hydrogen sulfide, solutions of mercury compounds yield a black precipitate that is insoluble in ammonium sulfide TS and in boiling 2 N nitric acid.

Mercuric salts

- **A.** Solutions of mercuric salts yield a yellow precipitate with 1 N sodium hydroxide.
- **B.** Solutions of mercuric salts yield, in neutral solutions with potassium iodide TS, a scarlet precipitate that is very soluble in an excess of the reagent.

Mercurous salts

- **A.** Mercurous compounds are decomposed by 1 N sodium hydroxide, producing a black color.
- **B.** With hydrochloric acid, solutions of mercurous salts yield a white precipitate that is blackened by the addition of 6 N ammonium hydroxide.
- **C.** With potassium iodide TS, a yellow precipitate, which may become green upon standing, is formed.

Nitrate

- **A.** When a solution of a nitrate is mixed with an equal volume of sulfuric acid, the mixture is cooled, and a solution of ferrous sulfate is superimposed; a brown color is produced at the junction of the two liquids.
- **B.** When a nitrate is heated with sulfuric acid and metallic copper, brownish-red fumes evolve.
- **C.** Nitrates do not decolorize acidified potassium permanganate TS (distinction from nitrites).

Nitrite

- **A.** When treated with dilute mineral acids or with 6 N acetic acid, nitrites evolve brownish-red fumes. The solution colors starch–iodide paper blue.

Oxalate

- **A.** Neutral and alkaline solutions of oxalates yield a white precipitate with calcium chloride TS. This precipitate is insoluble in 6 N acetic acid but is dissolved by hydrochloric acid.
- **B.** Hot acidified solutions of oxalates decolorize potassium permanganate TS.

Permanganate

- **A.** Solutions of permanganates acidified with sulfuric acid are decolorized by hydrogen peroxide TS and by sodium bisulfite TS, in the cold, and by oxalic acid TS in a hot solution.

Peroxide

- **A.** Solutions of peroxides slightly acidified with sulfuric acid yield a deep blue color upon the addition of potassium dichromate TS. On shaking the mixture with an equal volume of ethyl ether and allowing the liquids to separate, the blue color is found in the ethyl ether layer.

Phosphate

[NOTE—Where the monograph specifies the identification test for *Phosphate*, use the tests for orthophosphates, unless the instructions specify the use of the pyrophosphate tests or indicate that the product is to be ignited before performing the test.]

Orthophosphates

- **A.** With silver nitrate TS, neutral solutions of orthophosphates yield a yellow precipitate that is soluble in 2 N nitric acid and in 6 N ammonium hydroxide.
- **B.** With ammonium molybdate TS, acidified solutions of orthophosphates yield a yellow precipitate that is soluble in 6 N ammonium hydroxide. This precipitate may be slow to form.

Pyrophosphates

- **A.** With silver nitrate TS, pyrophosphates obtained by ignition yield a white precipitate that is soluble in 2 N nitric acid and soluble in 6 N ammonium hydroxide.
- **B.** With ammonium molybdate TS, pyrophosphates obtained by ignition yield a yellow precipitate that is soluble in 6 N ammonium hydroxide.

Potassium

- **A.** In neutral, concentrated, or moderately concentrated solutions of potassium salts (depending upon the solubility and the potassium content), sodium bitartrate TS produces a white crystalline precipitate that is soluble in 6 N ammonium hydroxide and in solutions of alkali hydroxides and carbonates. The formation of the precipitate, which is usually slow, is accelerated by

stirring or rubbing the inside of the test tube with a glass rod. The addition of a small amount of glacial acetic acid or alcohol also promotes the precipitation.

Salicylate

- **A.** In moderately concentrated solutions of salicylates, ferric chloride TS produces a violet color.
- **B.** Addition of acids to moderately concentrated solutions of salicylates produces a white, crystalline precipitate of salicylic acid that melts between 158° and 161°.

Silver

- **A.** With hydrochloric acid, solutions of silver salts yield a white, curdy precipitate that is insoluble in nitric acid but is readily soluble in 6 N ammonium hydroxide.
- **B.** A solution of a silver salt, to which 6 N ammonium hydroxide and a small quantity of formaldehyde TS are added, deposits, upon warming, a mirror of metallic silver upon the sides of the container.

Sodium

- **A.** Unless otherwise specified in an individual monograph, prepare a solution to contain 0.1 g of the sodium compound in 2 mL of water. Add 2 mL of 15% potassium carbonate, and heat to boiling. No precipitate is formed. Add 4 mL of potassium pyroantimonate TS, and heat to boiling. Allow to cool in ice water and, if necessary, rub the inside of the test tube with a glass rod. A dense precipitate is formed.

Sulfate

- **A.** With barium chloride TS, solutions of sulfates yield a white precipitate that is insoluble in hydrochloric acid and in nitric acid.
- **B.** With lead acetate TS, neutral solutions of sulfates yield a white precipitate that is soluble in ammonium acetate TS.
- **C.** Hydrochloric acid produces no precipitate when added to solutions of sulfates (distinction from thiosulfates).

Sulfite

- **A.** When treated with 3 N hydrochloric acid, sulfites and bisulfites yield sulfur dioxide, which blackens filter paper moistened with mercurous nitrate TS.

Tartrate

- **A.** Dissolve a few mg of a tartrate salt in 2 drops of sodium metaperiodate solution (1:20). Add 1 drop of 1 N sulfuric acid and after 5 min add a few drops of sulfurous acid, followed by a few drops of fuchsin-sulfurous acid TS: a reddish-pink color is produced within 15 min.

Thiocyanate

- **A.** With ferric chloride TS, solutions of thiocyanates yield a red color that is not destroyed by moderately concentrated mineral acids.

Thiosulfate

- **A.** With hydrochloric acid, solutions of thiosulfates yield a white precipitate that soon turns yellow; with the addition of sulfur dioxide, filter paper moistened with mercurous nitrate TS blackens.
- **B.** The addition of ferric chloride TS to solutions of thiosulfates produces a dark violet color that disappears quickly.

Zinc

- **A.** In the presence of sodium acetate, solutions of zinc salts yield a white precipitate with hydrogen sulfide. This precipitate is insoluble in acetic acid but is dissolved by 3 N hydrochloric acid.
- **B.** Ammonium sulfide TS produces a similar precipitate in neutral and in alkaline solutions.
- **C.** With potassium ferrocyanide TS, zinc salts in solution yield a white precipitate that is insoluble in 3 N hydrochloric acid.

INSTRUMENTAL IDENTIFICATION TESTS

Instrumental techniques described in this section may be used in lieu of procedures described in *Chemical Identification Tests*. Instrumental techniques provide flexibility in the choice of identification tests. All instrumental techniques shall follow method validation procedures for identification tests (see *Validation of Compendial Procedures* 〈1225〉, *Validation, Data Elements Required for Validation, Category IV*). *Instrumental Identification Tests* must demonstrate specificity. In addition, other suitable, validated instrumental techiques may be used.

The selection of the appropriate sample preparation depends on the material under test and must be appropriate for the technique being used. The analyst may use any of the following preparation procedures, with the appropriate verification. An electronic library spectrum of the Reference Standard may be used in comparison to the test sample provided adequate specificity is maintained. When using solvents, the solvent must be free of interfering species. Use USP Reference Standards where available (see *General Notices, 5.80 USP Reference Standards*).

- **IDENTIFICATION USING X-RAY FLUORESCENCE SPECTROMETRY**

X-ray fluorescence spectrometry (XRF) can typically be used for identification of elements with atomic numbers from magnesium through uranium. The actual range of elements for which the instrument is capable is dependent on the instrument design. Guidance regarding the use of XRF may be found in *X-Ray Fluorescence Spectrometry* 〈735〉.

Sample preparation

Powders/solids: Powders and solids can be used without further manipulation, or material can be made into pellets as described in 〈735〉.

Neat liquids: Liquids can be used without further manipulation, provided the liquid is a single phase, is compatible with the sample holder, and has sufficiently low volatility.

General Chapters

Samples in solution: Samples may be dissolved in an appropriate solvent.

Procedure

Blank: For *Powders/solids* and *Neat liquids*, prepare a blank sample holder. For *Samples in solution*, use the solvent as a blank.

Reference standard and **Sample:** Prepare each *Reference standard* and *Sample* by using sufficient material as required for the specific manufacturer's instrumentation.

Analysis: Analyze the *Blank, Reference standard*, and *Sample* according to the manufacturer's suggestions for the specific instrument. If there is any interference, use the *Blank* to make the correction. The spectrum of the *Reference standard* exhibits its radiation characteristic of the element(s) under investigation. The energy bands of the *Sample* exhibit radiation characteristic of the element(s) under investigation and compare qualitatively with that of the *Reference standard*.

• **Identification Using Atomic Spectroscopy Techniques: Atomic Absorption Spectroscopy, Inductively Coupled Plasma–Optical Emission Spectroscopy, Inductively Coupled Plasma–Mass Spectrometry**

Atomic absorption (AA) spectroscopy techniques can be used for the identification of many elements. Guidance regarding the use of AA spectroscopy may be found in *Atomic Absorption Spectroscopy* ⟨852⟩. Guidance regarding the use of inductively coupled plasma–optical emission spectroscopy (ICP–OES) or inductively coupled plasma–mass spectrometry (ICP–MS) may be found in *Plasma Spectrochemistry* ⟨730⟩.

Sample preparation: Samples should be dissolved in an appropriate solvent. If dissolving the sample is not possible, digestion may be necessary.

Procedure

Blank: Prepare an appropriate solution that does not contain the analyte(s) of interest and is compatible with the technique being used.

Standard solution: Standards must contain the analyte of interest. All solutions should be matrix-matched where possible.

Sample solution: Prepare the sample in the same solvent as the standard.

Analysis: Analyze the *Blank, Standard solution*, and *Sample solution* according to the manufacturer's suggestions for the specific instrument. When a wavelength-based technique is used, wherever possible select at least two wavelengths characteristic of the analyte(s) of interest. When a mass-based technique is used, wherever possible select at least two isotopes characteristic of the analyte(s) of interest. If two isotopes are unavailable, or if an element is monoisotopic, it may be possible to monitor the oxide of the analyte(s) ($m + 16$), if one is formed. If no oxide is formed, or if multiple isotopes cannot be evaluated because of interferences or because of a limited number of isotopes, then a different technique may be required. If interfering elements are present in the sample solution, wavelengths or masses examined must be selected to unequivocally identify the analyte(s) of interest.

• **Identification Using Ion Chromatography**

Ion chromatography (IC) can be used to identify a number of anions and cations found in drug substances (for additional information, see *Ion Chromatography* ⟨1065⟩).

Apparatus: Analyte detection will typically utilize suppressed conductivity, although other detection methods are possible, depending on the analyte (see ⟨1065⟩). The ion-exchange column must be capable of separating the analyte from any other ions of the same charge known to be in the sample at a concentration ≥5% of the analyte.

Procedure

Blank: Use the sample solvent as a blank.

Standard and **Sample solutions:** Dissolve or dilute the sample in water. Other solvents can be used if compatible with the IC column.

Analysis: Analyze an equal volume of the *Blank*, Reference Standard, and sample (according to the manufacturer's suggestions for the specific instrument and column dimensions). The counterion is identified if a peak in the sample has the same retention time as the peak in the Reference Standard, and there is not a peak of ≥5% of its size at the same retention time in the *Blank*.

• **Identification by Other Liquid Chromatography Techniques in Chromatography ⟨621⟩**

Some of the ions suitable for IC identification can also be identified by other forms of liquid chromatography. Sample and Reference Standard concentrations, as well as injection volumes, need to be adjusted, depending on the detection technique used. All high-concentration components in the test substance should be analyzed to judge whether there is interference with the analyte of interest.

• **Identification Using Raman Spectroscopy**

Raman spectroscopy can be used for identification of counterions. Guidance regarding the use of Raman spectroscopy may be found in *Raman Spectroscopy* ⟨1120⟩.

Apparatus: Prepare the spectrometer for operation according to the instrument instruction manual and the instrument manufacturer's recommendations. An instrument performance check and the quality of spectra collected should be evaluated at time of use or following manufacturer's instructions.

Procedure

Reference standard and **Sample:** All reference material and sample spectra should be collected using identical instrumental parameters. These instrumental parameters may be determined by the analyst based on the nature of the sample

and the type of analysis and should be selected based on the quality of spectra needed. Use the appropriate sample container and/or sample holding apparatus, depending on the type of reference material and sample (powder, liquid, paste, film, or other) being analyzed. Transfer the sample or reference material into the appropriate sample container and/or holder, as needed, and acquire the spectrum for each.

Analysis: Qualitatively compare the Raman spectra obtained from the reference material and the *Sample*. The *Sample* complies with the identity test if the spectrum exhibits maxima only at the same wavelengths as that of a similar preparation of the corresponding USP Reference Standard, where available.

- **Identification Using Mid-Infrared Spectroscopy**

Mid-infrared spectroscopy techniques can be used for identification of counterions. Guidance regarding the use of mid-infrared spectroscopy may be found in *Mid-Infrared Spectroscopy* ⟨854⟩ and *Spectrophotometric Identification Tests* ⟨197⟩. If the monograph contains an identification test by IR (e.g., ⟨197⟩) and a reference to ⟨191⟩, then mid-infrared cannot be used as an instrumental replacement for the chemical identification tests prescribed in this chapter.

Procedure

Standard and Sample solutions: Sample preparation may be conducted using any of the procedures described in ⟨854⟩ that are appropriate for the sample of concern. The standard preparation should be conducted in the same way but using the USP Reference Standard of the substance under test, where available.

Analysis: Record the spectra of the test specimen and the corresponding Reference Standard over the range from about 3800 to 650 cm^{-1} (2.6–15 µm). The IR absorption spectrum of the preparation of the test specimen, previously dried under conditions specified for the corresponding Reference Standard, unless the Reference Standard is to be used without drying, exhibits maxima only at the same wavelengths as that of a similar preparation of the corresponding USP Reference Standard, where available.

⟨191⟩ IDENTIFICATION TESTS—GENERAL

(Current chapter official through April 30, 2017)

Under this heading are placed tests that are frequently referred to in the Pharmacopeia for the identification of official articles. Before using any acid or base to modify the pH of the sample solution, make sure that the added substance will not interfere with the results of the test. [Note—The tests are not intended to be applicable to mixtures of substances unless so specified.]

Acetate—Dissolve about 30 mg of the substance to be examined in 3 mL of water, or use 3 mL of the prescribed solution. Adjust the pH of the solution with sodium hydroxide to slightly alkaline. Add 0.25 mL of lanthanum nitrate TS. If a white precipitate is formed, filter the solution. Add successively 0.1 mL of iodine and potassium iodide TS 3 and 0.1 mL of ammonia TS 2 to the solution. If no blue color is observed, heat carefully to boiling. In the presence of acetates, a dark color develops or a blue precipitate is formed. With neutral solutions of acetates, ferric chloride TS produces a red color that is destroyed by the addition of mineral acids.

Aluminum—With 6 N ammonium hydroxide, solutions of aluminum salts yield a gelatinous, white precipitate that is insoluble in an excess of 6 N ammonium hydroxide. 1 N sodium hydroxide or sodium sulfide TS produces the same precipitate, which dissolves in an excess of either of these reagents.

Ammonium—Add 0.2 g of magnesium oxide to the solution under test. Pass a current of air through the mixture, and direct the gas that escapes to just beneath the surface of an indicator solution, prepared by mixing 1 mL of 0.1 M hydrochloric acid and 0.05 mL of methyl red TS 2. In the presence of ammonium, the color of the indicator solution is changed to yellow. After directing the gas into the indicator solution for a sufficient period of time, add 1 mL of freshly prepared sodium cobaltinitrite TS to the indicator solution. Upon the addition of the sodium cobaltinitrite TS, a yellow precipitate is formed when ammonium is present.

Antimony—With hydrogen sulfide, solutions of antimony (III) compounds, strongly acidified with hydrochloric acid, yield an orange precipitate of antimony sulfide that is insoluble in 6 N ammonium hydroxide, but is soluble in ammonium sulfide TS.

Barium—Solutions of barium salts yield a white precipitate with 2 N sulfuric acid. This precipitate is insoluble in hydrochloric acid and in nitric acid. Barium salts impart a yellowish-green color to a nonluminous flame that appears blue when viewed through green glass.

Benzoate—In neutral solutions, benzoates yield a salmon-colored precipitate with ferric chloride TS. In moderately concentrated solutions, benzoates yield a precipitate of benzoic acid upon acidification with 2 N sulfuric acid. This precipitate is readily soluble in ethyl ether.

Bicarbonate—See *Carbonate*.

Bismuth—When dissolved in a slight excess of nitric acid or hydrochloric acid, bismuth salts yield a white precipitate upon dilution with water. This precipitate is colored brown by hydrogen sulfide, and the resulting compound dissolves in a warm mixture of equal parts of nitric acid and water.

General Chapters

Bisulfite—See *Sulfite*.

Borate—To 1 mL of a borate solution, acidified with hydrochloric acid to litmus, add 3 or 4 drops of iodine TS and 3 or 4 drops of polyvinyl alcohol solution (1 in 50): an intense blue color is produced. When a borate is treated with sulfuric acid, methanol is added, and the mixture is ignited, it burns with a green-bordered flame.

Bromide—Solutions of bromides, upon the addition of chlorine TS, dropwise, liberate bromine, which is dissolved by shaking with chloroform, coloring the chloroform red to reddish brown. Silver nitrate TS produces in solutions of bromides a yellowish-white precipitate that is insoluble in nitric acid and is slightly soluble in 6 N ammonium hydroxide.

Calcium—Solutions of calcium salts form insoluble oxalates when treated as follows. To a solution of the calcium salt (1 in 20) add 2 drops of methyl red TS, and neutralize with 6 N ammonium hydroxide. Add 3 N hydrochloric acid, dropwise, until the solution is acid to the indicator. Upon the addition of ammonium oxalate TS, a white precipitate is formed. This precipitate is insoluble in 6 N acetic acid but dissolves in hydrochloric acid. Calcium salts moistened with hydrochloric acid impart a transient yellowish-red color to a nonluminous flame.

Carbonate—Carbonates and bicarbonates effervesce with acids, evolving a colorless gas that, when passed into calcium hydroxide TS, produces a white precipitate immediately. A cold solution (1 in 20) of a soluble carbonate is colored red by phenolphthalein TS, while a similar solution of a bicarbonate remains unchanged or is only slightly colored.

Chlorate—Solutions of chlorates yield no precipitate with silver nitrate TS. The addition of sulfurous acid to this mixture produces a white precipitate that is insoluble in nitric acid, but is soluble in 6 N ammonium hydroxide. Upon ignition, chlorates yield chlorides, recognizable by appropriate tests. When sulfuric acid is added to a dry chlorate, decrepitation occurs, and a greenish yellow-gas is evolved. [*Caution—Use only a small amount of chlorate for this test, and exercise extreme caution in performing it.*]

Chloride—With silver nitrate TS, solutions of chlorides yield a white, curdy precipitate that is insoluble in nitric acid but is soluble in a slight excess of 6 N ammonium hydroxide. When testing amine (including alkaloidal) hydrochlorides that do not respond to the above test, add one drop of diluted nitric acid and 0.5 mL of silver nitrate TS to a solution of the substance being examined containing, unless otherwise directed in the monograph, about 2 mg of chloride ion in 2 mL: a white, curdy precipitate is formed. Centrifuge the mixture without delay, and decant the supernatant layer. Wash the precipitate with three 1-mL portions of nitric acid solution (1 in 100), and discard the washings. Add ammonia TS dropwise to this precipitate. It dissolves readily. When a monograph specifies that an article responds to the test for dry chlorides, mix the solid to be tested with an equal weight of manganese dioxide, moisten with sulfuric acid, and gently heat the mixture: chlorine, which is recognizable by the production of a blue color with moistened starch iodide paper, is evolved.

Citrate—To 15 mL of pyridine add a few mg of a citrate salt, dissolved or suspended in 1 mL of water, and shake. To this mixture add 5 mL of acetic anhydride, and shake: a light red color is produced.

Cobalt—Solutions of cobalt salts (1 in 20) in 3 N hydrochloric acid yield a red precipitate when heated on a steam bath with an equal volume of a hot, freshly prepared solution of 1-nitroso-2-naphthol (1 in 10) in 9 N acetic acid. Solutions of cobalt salts, when saturated with potassium chloride and treated with potassium nitrite and acetic acid, yield a yellow precipitate.

Copper—Solutions of cupric compounds, acidified with hydrochloric acid, deposit a red film of metallic copper upon a bright, untarnished surface of metallic iron. An excess of 6 N ammonium hydroxide, added to a solution of a cupric salt, produces first a bluish precipitate and then a deep blue-colored solution. With potassium ferrocyanide TS, solutions of cupric salts yield a reddish-brown precipitate, insoluble in diluted acids.

Hypophosphite—When strongly heated, hypophosphites evolve spontaneously flammable phosphine. Hypophosphites in solution yield a white precipitate with mercuric chloride TS. This precipitate becomes gray when an excess of hypophosphite is present. Solutions of hypophosphites, acidified with sulfuric acid, and warmed with cupric sulfate TS yield a red precipitate.

Iodide—Solutions of iodides, upon the addition of chlorine TS, dropwise, liberate iodine, which colors the solution yellow to red. When the solution is shaken with chloroform, the latter is colored violet. The iodine thus liberated gives a blue color with starch TS. Silver nitrate TS produces, in solutions of iodides, a yellow, curdy precipitate that is insoluble in nitric acid and in 6 N ammonium hydroxide.

Iron—Ferrous and ferric compounds in solution yield a black precipitate with ammonium sulfide TS. This precipitate is dissolved by cold 3 N hydrochloric acid with the evolution of hydrogen sulfide.

Ferric Salts—Acid solutions of ferric salts yield a dark blue precipitate with potassium ferrocyanide TS. With an excess of 1 N sodium hydroxide, a reddish-brown precipitate is formed. With ammonium thiocyanate TS, solutions of ferric salts produce a deep red color that is not destroyed by dilute mineral acids.

Ferrous Salts—Solutions of ferrous salts yield a dark blue precipitate with potassium ferricyanide TS. This precipitate is insoluble in 3 N hydrochloric acid but is decomposed by 1 N sodium hydroxide. With 1 N sodium hydroxide, solutions of ferrous salts yield a greenish-white precipitate, the color rapidly changing to green and then to brown when shaken.

Lactate—When solutions of lactates are acidified with sulfuric acid, potassium permanganate TS is added, and the mixture is heated, acetaldehyde is evolved. This can be detected by allowing the vapor to come into contact with a filter paper that has been moistened with a freshly prepared mixture of equal volumes of 20% aqueous morpholine and sodium nitroferricyanide TS: a blue color is produced.

Lead—With 2 N sulfuric acid, solutions of lead salts yield a white precipitate that is insoluble in 3 N hydrochloric or 2 N nitric acid, but is soluble in warm 1 N sodium hydroxide and in ammonium acetate TS. With potassium chromate TS, solutions of lead salts, free or nearly free from mineral acids, yield a yellow precipitate that is insoluble in 6 N acetic acid but is soluble in 1 N sodium hydroxide.

Lithium—With sodium carbonate TS, moderately concentrated solutions of lithium salts, made alkaline with sodium hydroxide, yield a white precipitate on boiling. The precipitate is soluble in ammonium chloride TS. Lithium salts moistened with hydrochloric acid impart an intense crimson color to a nonluminous flame. Solutions of lithium salts are not precipitated by 2 N sulfuric acid or soluble sulfates (*distinction from strontium*).

Magnesium—Solutions of magnesium salts in the presence of ammonium chloride yield no more than a slightly hazy precipitate when neutralized with ammonium carbonate TS, but on the subsequent addition of dibasic sodium phosphate TS, a white, crystalline precipitate, which is insoluble in 6 N ammonium hydroxide, is formed.

Manganese—With ammonium sulfide TS, solutions of manganous salts yield a salmon-colored precipitate that dissolves in acetic acid.

Mercury—When applied to bright copper foil, solutions of mercury salts, free from an excess of nitric acid, yield a deposit that upon rubbing, becomes bright and silvery in appearance. With hydrogen sulfide, solutions of mercury compounds yield a black precipitate that is insoluble in ammonium sulfide TS and in boiling 2 N nitric acid.

Mercuric Salts—Solutions of mercuric salts yield a yellow precipitate with 1 N sodium hydroxide. They yield also, in neutral solutions with potassium iodide TS, a scarlet precipitate that is very soluble in an excess of the reagent.

Mercurous Salts—Mercurous compounds are decomposed by 1 N sodium hydroxide, producing a black color. With hydrochloric acid, solutions of mercurous salts yield a white precipitate that is blackened by 6 N ammonium hydroxide. With potassium iodide TS, a yellow precipitate, that may become green upon standing, is formed.

Nitrate—When a solution of a nitrate is mixed with an equal volume of sulfuric acid, the mixture is cooled, and a solution of ferrous sulfate is superimposed, a brown color is produced at the junction of the two liquids. When a nitrate is heated with sulfuric acid and metallic copper, brownish-red fumes are evolved. Nitrates do not decolorize acidified potassium permanganate TS (*distinction from nitrites*).

Nitrite—When treated with dilute mineral acids or with 6 N acetic acid, nitrites evolve brownish-red fumes. The solution colors starch-iodide paper blue.

Oxalate—Neutral and alkaline solutions of oxalates yield a white precipitate with calcium chloride TS. This precipitate is insoluble in 6 N acetic acid but is dissolved by hydrochloric acid. Hot acidified solutions of oxalates decolorize potassium permanganate TS.

Permanganate—Solutions of permanganates acidified with sulfuric acid are decolorized by hydrogen peroxide TS and by sodium bisulfite TS, in the cold, and by oxalic acid TS, in hot solution.

Peroxide—Solutions of peroxides slightly acidified with sulfuric acid yield a deep blue color upon the addition of potassium dichromate TS. On shaking the mixture with an equal volume of ethyl ether and allowing the liquids to separate, the blue color is found in the ethyl ether layer.

Phosphate—[NOTE—Where the monograph specifies the identification test for *Phosphate*, use the tests for orthophosphates, unless the instructions specify the use of the pyrophosphate tests or indicate that the product is to be ignited before performing the test.] With silver nitrate TS, neutral solutions of orthophosphates yield a yellow precipitate that is soluble in 2 N nitric acid and in 6 N ammonium hydroxide. With ammonium molybdate TS, acidified solutions of orthophosphates yield a yellow precipitate that is soluble in 6 N ammonium hydroxide. This precipitate may be slow to form. With silver nitrate TS, pyrophosphates obtained by ignition yield a white precipitate that is soluble in 2 N nitric acid and in 6 N ammonium hydroxide. With ammonium molybdate TS, a yellow precipitate that is soluble in 6 N ammonium hydroxide is formed.

Potassium—Potassium compounds impart a violet color to a nonluminous flame, but the presence of small quantities of sodium masks the color unless the yellow color produced by sodium is screened out by viewing through a blue filter that blocks emission at 589 nm (sodium) but is transparent to emission at 404 nm (potassium). Traditionally, cobalt glass has been used, but other suitable filters are commercially available. In neutral, concentrated or moderately concentrated solutions of potassium salts (depending upon the solubility and the potassium content), sodium bitartrate TS produces a white crystalline precipitate that is soluble in 6 N ammonium hydroxide and in solutions of alkali hydroxides and carbonates. The formation of the precipitate, which is usually slow, is accelerated by stirring or rubbing the inside of the test tube with a glass rod. The addition of a small amount of glacial acetic acid or alcohol also promotes the precipitation.

Salicylate—In moderately dilute solutions of salicylates, ferric chloride TS produces a violet color. The addition of acids to moderately concentrated solutions of salicylates produces a white, crystalline precipitate of salicylic acid that melts between 158° and 161°.

Silver—With hydrochloric acid, solutions of silver salts yield a white, curdy precipitate that is insoluble in nitric acid, but is readily soluble in 6 N ammonium hydroxide. A solution of a silver salt to which 6 N ammonium hydroxide and a small quantity of formaldehyde TS are added deposits, upon warming, a mirror of metallic silver upon the sides of the container.

Sodium—Unless otherwise specified in an individual monograph, prepare a solution to contain 0.1 g of the sodium compound in 2 mL of water. Add 2 mL of 15% potassium carbonate, and heat to boiling. No precipitate is formed. Add 4 mL of potassium pyroantimonate TS, and heat to boiling. Allow to cool in ice water and, if necessary, rub the inside of the test tube with a glass rod. A dense precipitate is formed. Sodium compounds impart an intense yellow color to a nonluminous flame.

Sulfate—With barium chloride TS, solutions of sulfates yield a white precipitate that is insoluble in hydrochloric acid and in nitric acid. With lead acetate TS, neutral solutions of sulfates yield a white precipitate that is soluble in ammonium acetate TS. Hydrochloric acid produces no precipitate when added to solutions of sulfates (*distinction from thiosulfates*).

Sulfite—When treated with 3 N hydrochloric acid, sulfites and bisulfites yield sulfur dioxide, which blackens filter paper moistened with mercurous nitrate TS.

Tartrate—Dissolve a few mg of a tartrate salt in 2 drops of sodium metaperiodate solution (1 in 20). Add a drop of 1 N sulfuric acid, and after 5 minutes add a few drops of sulfurous acid followed by a few drops of fuchsin–sulfurous acid TS: a reddish-pink color is produced within 15 minutes.

Thiocyanate—With ferric chloride TS, solutions of thiocyanates yield a red color that is not destroyed by moderately concentrated mineral acids.

Thiosulfate—With hydrochloric acid, solutions of thiosulfates yield a white precipitate that soon turns yellow, and sulfur dioxide, which blackens filter paper moistened with mercurous nitrate TS. The addition of ferric chloride TS to solutions of thiosulfates produces a dark violet color that quickly disappears.

Zinc—In the presence of sodium acetate, solutions of zinc salts yield a white precipitate with hydrogen sulfide. This precipitate is insoluble in acetic acid, but is dissolved by 3 N hydrochloric acid. Ammonium sulfide TS produces a similar precipitate in neutral and in alkaline solutions. With potassium ferrocyanide TS, zinc salts in solution yield a white precipitate that is insoluble in 3 N hydrochloric acid.

〈193〉 IDENTIFICATION—TETRACYCLINES

The following chromatographic procedures are provided to confirm the identity of Pharmacopeial drug substances that are of the tetracycline type, such as doxycycline, oxytetracycline, and tetracycline, and to confirm the identity of such compounds in their respective Pharmacopeial dosage forms. Two procedures are provided, one based on paper chromatography (*Method I*) and the other on thin-layer chromatography (*Method II*). *Method I* is to be used unless otherwise directed in the individual monograph.

PROCEDURES

Standard solution: Unless otherwise directed in the individual monograph, dissolve the USP Reference Standard for the drug substance being identified in the same solvent and at the same concentration as for the *Test solution*.

Test solution: Prepare as directed in the individual monograph.

• **METHOD I**

pH 3.5 Buffer: Dissolve 13.4 g of anhydrous citric acid and 16.3 g of dibasic sodium phosphate in 1000 mL of water, and mix.

Developing solvent: On the day of use, mix 10 volumes of chloroform, 20 volumes of nitromethane, and 3 volumes of pyridine.

Mixed test solution: Mix equal volumes of the *Standard solution* and the *Test solution*.

Chromatographic sheet: Draw a spotting line 2.5 cm from one edge of a 20-cm × 20-cm sheet of filter paper (Whatman No. 1, or equivalent). Impregnate the sheet with *pH 3.5 Buffer* by passing it through a trough filled with *pH 3.5 Buffer*, and remove the excess solvent by firmly pressing the sheet between nonfluorescent blotting papers.

Procedure: To a suitable chromatographic chamber, prepared for ascending chromatography (see *Chromatography* 〈621〉) add *Developing solvent* to a depth of 0.6 cm. Apply at 1.5-cm intervals 2 µL each of the *Standard solution*, the *Test solution*, and the *Mixed test solution* to the spotting line of the *Chromatographic sheet*. Allow the sheet to dry partially, and while still damp place it in the chromatographic chamber with the bottom edge touching the *Developing solvent*. When the solvent front has risen about 10 cm, remove the sheet from the chamber, and expose the sheet to ammonia vapor. Examine the chromatogram under long-wavelength UV light. Record the positions of the major yellow fluorescent spots: the R_f value of the principal spot obtained from the *Test solution* and from the *Mixed test solution* corresponds to that obtained from the *Standard solution*.

• **METHOD II**

Resolution solution: Unless otherwise directed in the individual monograph, prepare a solution in methanol containing 0.5 mg each of USP Chlortetracycline Hydrochloride RS, USP Doxycycline Hyclate RS, USP Oxytetracycline RS, and USP Tetracycline Hydrochloride RS per mL.

Developing solvent: Prepare a mixture of 0.5 M oxalic acid, previously adjusted with ammonium hydroxide to a pH of 2.0, acetonitrile, and methanol (80:20:20).

Chromatographic plate: Use a suitable thin-layer chromatographic plate (see *Thin-Layer Chromatography* under *Chromatography* 〈621〉) coated with a 0.25-mm layer of octylsilanized chromatographic silica gel mixture. Activate the plate by heating it at 130° for 20 minutes, allow to cool, and use while still warm.

Procedure: Separately apply 1 µL each of the *Standard solution*, the *Test solution*, and the *Resolution solution* to the *Chromatographic plate*. Allow the spots to dry, and develop the chromatogram in the *Developing solvent* until the solvent front has moved about three-fourths of the length of the plate. Remove the plate from the developing chamber, mark the solvent front, and allow to air-dry. Expose the plate to ammonia vapors for 5 minutes, and promptly locate the spots on the plate by viewing under long-wavelength UV light: the chromatogram of the *Resolution solution* shows clearly separated

spots, and the principal spot obtained from the *Test solution* corresponds in R_F value, intensity, and appearance to that obtained from the *Standard solution.*

⟨197⟩ SPECTROPHOTOMETRIC IDENTIFICATION TESTS

Spectrophotometric tests contribute meaningfully toward the identification of many compendial chemical substances. The test procedures that follow are applicable to substances that absorb IR and/or UV radiation (see *Mid-Infrared Spectroscopy* ⟨854⟩ and *Ultraviolet-Visible Spectroscopy* ⟨857⟩).

The IR absorption spectrum of a substance, compared with that obtained concomitantly for the corresponding USP Reference Standard, provides perhaps the most conclusive evidence of the identity of the substance that can be realized from any single test. The UV absorption spectrum, on the other hand, does not exhibit a high degree of specificity. Conformance with both IR absorption and UV absorption test specifications, as called for in a large proportion of compendial monographs, leaves little doubt, if any, regarding the identity of the specimen under examination.

INFRARED ABSORPTION

Seven methods are indicated for the preparation of previously dried test specimens and Reference Standards for analysis. The reference ⟨197K⟩ in a monograph signifies that the substance under examination is mixed intimately with potassium bromide. The reference ⟨197M⟩ in a monograph signifies that the substance under examination is finely ground and dispersed in mineral oil. The reference ⟨197F⟩ in a monograph signifies that the substance under examination is suspended neat between suitable (for example, sodium chloride or potassium bromide) plates. The reference ⟨197S⟩ signifies that a solution of designated concentration is prepared in the solvent specified in the individual monograph, and the solution is examined in 0.1-mm cells unless a different cell path length is specified in the individual monograph. The reference ⟨197A⟩ signifies that the substance under examination is intimately in contact with an internal reflection element for attenuated total reflectance (ATR) analysis. The reference ⟨197E⟩ signifies that the substance under examination is pressed as a thin sample against a suitable plate for IR microscopic analysis. The reference ⟨197D⟩ in a monograph signifies that the substance under examination is mixed intimately with an IR-transparent material and transferred to a sample container for diffuse reflection (DR) analysis. The ATR ⟨197A⟩ and the ⟨197E⟩ techniques can be used as alternative methods for ⟨197K⟩, ⟨197M⟩, ⟨197F⟩, and ⟨197S⟩ where testing is performed qualitatively and the Reference Standard spectra are similarly obtained.

Record the spectra of the test specimen and the corresponding USP Reference Standard over the range from about 2.6 µm to 15 µm (3800 cm^{-1} to 650 cm^{-1}) unless otherwise specified in the individual monograph. The IR absorption spectrum of the preparation of the test specimen, previously dried under conditions specified for the corresponding Reference Standard unless otherwise specified, or unless the Reference Standard is to be used without drying, exhibits maxima only at the same wavelengths as that of a similar preparation of the corresponding USP Reference Standard.

Differences that may be observed in the spectra so obtained sometimes are attributed to the presence of polymorphs, which are not always acceptable (see *Procedure* under ⟨854⟩). Unless otherwise directed in the individual monograph, therefore, continue as follows. If a difference appears in the IR spectra of the analyte and the standard, dissolve equal portions of the test specimen and the Reference Standard in equal volumes of a suitable solvent, evaporate the solution to dryness in similar containers under identical conditions, and repeat the test on the residues.

ULTRAVIOLET ABSORPTION

The reference ⟨197U⟩ in a monograph signifies that a test solution and a Standard solution are examined spectrophotometrically, in 1-cm cells, over the spectral range from 200 to 400 nm unless otherwise specified in the individual monograph.

Dissolve a portion of the substance under examination in the designated *Medium* to obtain a test solution having the concentration specified in the monograph for *Solution.* Similarly prepare a Standard solution containing the corresponding USP Reference Standard.

Record and compare the spectra concomitantly obtained for the test solution and the Standard solution. Calculate absorptivities and/or absorbance ratios where these criteria are included in an individual monograph. Unless otherwise specified, absorbances indicated for these calculations are those measured at the maximum absorbance at about the wavelength specified in the individual monograph. Where the absorbance is to be measured at about the specified wavelength other than that of maximum absorbance, the abbreviations (min) and (sh) are used to indicate a minimum and shoulder, respectively, in an absorption spectrum. The requirements are met if the UV absorption spectra of the test solution and the Standard solution exhibit maxima and minima at the same wavelengths and absorptivities and/or absorbance ratios are within specified limits.

⟨201⟩ THIN-LAYER CHROMATOGRAPHIC IDENTIFICATION TEST

PROCEDURES

• **General Procedure**

The following procedure is applicable as an aid in verifying the identities of many compendial drug substances as such and in their respective dosage forms.

Prepare a test solution as directed in the individual monograph. On a line parallel to and about 2 cm from the edge of a suitable thin-layer chromatographic plate, coated with a 0.25-mm layer of chromatographic silica gel mixture (see *Chromatography* ⟨621⟩) apply 10 µL of this solution and 10 µL of a *Standard solution* prepared from the USP Reference Standard for the drug substance being identified, in the same solvent and at the same concentration as the test solution, unless otherwise directed in the individual monograph. Allow the spots to dry, and develop the chromatogram in a solvent system consisting of a mixture of chloroform, methanol, and water (180:15:1), unless otherwise directed in the individual monograph, until the solvent front has moved about three-fourths of the length of the plate. Remove the plate from the developing chamber, mark the solvent front, and allow the solvent to evaporate. Unless otherwise directed in the individual monograph, locate the spots on the plate by examination under short-wavelength UV light. The R_f value of the principal spot obtained from the test solution corresponds to that obtained from the Standard solution.

• **Procedure for Bacitracin, Neomycin, and Polymyxin B**

The following thin-layer chromatographic procedure is applicable as an aid in verifying the identities of bacitracin, neomycin, and polymyxin B active ingredients and in dosage forms when present singly and in two- and three-component mixtures. The reference ⟨201BNP⟩ in a monograph signifies that this procedure is intended.

Prepare a *Test solution* as follows, unless otherwise directed in the individual monograph.

Test solution

For drug substances: Dissolve a portion of Bacitracin, Bacitracin Zinc, Neomycin Sulfate, or Polymyxin B Sulfate in 0.1 N hydrochloric acid to obtain a solution containing about 500 USP Bacitracin Units per mL, 3.5 mg of neomycin (base) per mL, or 10,000 USP Polymyxin B Units per mL.

For solutions: Where the solution contains neomycin and polymyxin B, dilute a portion of it with 0.1 N hydrochloric acid to obtain a solution containing the equivalent of about 3.5 mg of neomycin (base) per mL. Where the Solution contains polymyxin B but not neomycin, dilute a portion of it with 0.1 N hydrochloric acid to obtain a solution containing about 10,000 USP Polymyxin B Units per mL.

For creams, lotions, and ointments: Where the Cream, Lotion, or Ointment contains Bacitracin or Bacitracin Zinc, transfer a portion of it equivalent to about 500 USP Bacitracin Units, to a 15-mL centrifuge tube. Where the Cream, Lotion, or Ointment contains neomycin, but not Bacitracin or Bacitracin Zinc, transfer a portion of it equivalent to about 3.5 mg of neomycin (base) per mL to a 15-mL centrifuge tube. Add 4 mL of chloroform to the centrifuge tube, and shake well to disperse the Cream, Lotion, or Ointment. Add 1 mL of 0.1 N hydrochloric acid, vortex for 4 minutes, centrifuge, and use the clear supernatant.

[Note—The *Modified test solution* as described below in the *Modified procedure* may be used in lieu of the *Test solution*.]

Standard bacitracin solution: Dissolve a portion of USP Bacitracin Zinc RS in 0.1 N hydrochloric acid to obtain a solution containing 500 USP Bacitracin Units per mL.

Standard neomycin solution: Dissolve a portion of USP Neomycin Sulfate RS in 0.1 N hydrochloric acid to obtain a solution containing the equivalent of 3.5 mg of neomycin (base) per mL.

Standard polymyxin B solution: Dissolve a portion of USP Polymyxin B Sulfate RS in 0.1 N hydrochloric acid to obtain a solution containing 10,000 USP Polymyxin B Units per mL. Where the article under test also contains Bacitracin or Bacitracin Zinc, dissolve a portion of USP Polymyxin B Sulfate RS in 0.1 N hydrochloric acid to obtain a solution containing 500*J* USP Polymyxin B Units per mL, *J* being the ratio of the labeled amount of USP Polymyxin B Units to the labeled amount of USP Bacitracin Units in each g of Cream, Lotion, or Ointment.

Developing solvent solution: Prepare a mixture of methanol, isopropyl alcohol, methylene chloride, ammonium hydroxide, and water (4:2:2:2:1.5).

Procedure: Apply 10 µL of the *Test solution* and each of the relevant *Standard solutions* to a suitable thin-layer chromatographic plate (see *Chromatography* ⟨621⟩) coated with a 0.25-mm layer of chromatographic silica gel. Place the plate in a presaturated chromatographic chamber, and develop the chromatogram with the *Developing solvent system* until the solvent front has moved about three-fourths of the length of the plate. Remove the plate from the chamber, and dry at 105° for 10 minutes. Spray the plate with a 0.2% solution of ninhydrin in butyl alcohol, and heat at 105° for 5 minutes. The R_F value of each principal spot in the chromatogram of the *Test solution* corresponds to that of the principal spot in the chromatogram obtained from each relevant *Standard solution* as appropriate for the labeled active ingredient or ingredients specified on the label. If the chromatogram of the *Test solution* yields excessive streaking, proceed as directed for *Modified procedure*.

Modified procedure: Transfer the *Test solution* to a 15-mL centrifuge tube, add 10 mL of saturated aqueous picric acid solution (1.2%, w/v), vortex for 1 minute, centrifuge for 10 minutes, and discard the supernatant. Wash the residue with 1-mL portions of water until no yellow color is observed in the washing. Discard the washings, and dry the residue under a

stream of nitrogen at 50°. Dissolve the residue in 1 mL of acetone, add 1 mL of a freshly prepared solution of sulfuric acid in acetone (1 in 100), shake, centrifuge for 5 minutes, and discard the supernatant. Rinse the residue with 1 mL of acetone, centrifuge briefly, and discard the washing. Repeat the washing until no yellow color is observed. Dry the residue under a stream of nitrogen at 50°. Dissolve the residue in 0.5 mL of 0.1 N hydrochloric acid (*Modified test solution*). Repeat the *Procedure* using this *Modified test solution* instead of the *Test solution*. The R_F value of each principal spot in the chromatogram of the *Modified test solution* corresponds to that of the principal spot in the chromatogram obtained from each relevant *Standard solution* as appropriate for the active ingredient or ingredients specified on the label.

⟨202⟩ IDENTIFICATION OF FIXED OILS BY THIN-LAYER CHROMATOGRAPHY

INTRODUCTION

The following procedure for the USP *Identification* test is used to identify fixed oils using high-performance thin-layer chromatography (HPTLC), with a suitable octadecylsilyl silica gel as the coating substance.

IDENTIFICATION

• **Method I**

Mobile phase 1: Ethyl ether

Mobile phase 2: Methylene chloride, glacial acetic acid, and acetone (20:40:50)

System suitability solution 1: Dissolve about 20 mg (1 drop) of USP Corn Oil RS in 3 mL of methylene chloride.

System suitability solution 2: Dissolve about 20 mg (1 drop) of USP Olive Oil RS in 3 mL of methylene chloride.

Standard solution: Dissolve about 20 mg (1 drop) of the appropriate USP Reference Standard in 3 mL of methylene chloride.

Sample solution: Dissolve about 20 mg (1 drop) of a fixed oil sample in 3 mL of methylene chloride.

Chromatographic system

(See *Chromatography* ⟨621⟩*, Thin-Layer Chromatography*.)

Mode: HPTLC

Plate: 20 cm × 10 cm, silica gel 60 RP-18, 0.15–0.2 mm layer, 4–8 µm particle size[1]

Application volume: 1 µL, manually spot

Spray reagent: 100 mg/mL of phosphomolybdic acid in 96% alcohol

System suitability

Samples: *System suitability solution 1* and *System suitability solution 2*

Suitability requirements

Resolution: The four principal spots from corn oil are clearly identified and separated, and the two principal spots from olive oil are clearly identified and separated.

[Note—Retardation factors (R_F) are provided for informational purposes only to aid in spot identification. The R_F values for the four principal spots for USP Corn Oil RS are 0.39, 0.45, 0.51, and 0.56, and the R_F values for the two principal spots for USP Olive Oil RS are 0.39 and 0.45.]

Analysis

Samples: *Standard solution* and *Sample solution*

Apply the *Samples* in separate bands to the previously marked starting point on an HPTLC plate, and develop the plate in the following order:

(1) Ensure that the spots are at least 3 mm above the surface of the mobile phase. Develop two times over a path of 0.5 cm using *Mobile phase 1*. Remove the plate from the chamber after each run, and allow the plate to dry in air.

(2) Develop two times over a path of 8 cm using *Mobile phase 2*. Allow the plate to dry for about 5 min after each development and before spraying with a spray reagent.

Spray the plate with the *Spray reagent*.

Heat the plate at 120° for about 1 min, and examine in daylight.

Acceptance criteria: The R_F values of the principal spots of the *Sample solution* correspond to those of the *Standard solution*.

• **Method II**

Mobile phase: Methylene chloride, glacial acetic acid, and acetone (20:40:50)

System suitability solution 1: Dissolve 25 µL of USP Corn Oil RS in 3 mL of methylene chloride.

System suitability solution 2: Dissolve 25 µL of USP Olive Oil RS in 3 mL of methylene chloride.

Standard solution: Dissolve 25 µL of the appropriate USP Reference Standard in 3 mL of methylene chloride.

Sample solution: Dissolve 25 µL of a fixed oil sample in 3 mL of methylene chloride.

[1] HPTLC Silica Gel 60 RP-18 plate from Merck EMD, or equivalent.

Chromatographic system
(See *Chromatography* 〈621〉, *Thin-Layer Chromatography*.)
Mode: HPTLC
Plate: 20 cm × 10 cm, silica gel 60 RP-18 (or RP-18 F_{254}), 0.15–0.2 mm layer, 4–8 µm particle size
Conditioning of plate: Condition the plate to a relative humidity of about 33%.
Application volume: 2 µL as bands of 8 mm. A suitable automated apparatus is used.
Spray reagent: 25 mg/mL of phosphomolybdic acid in 96% alcohol
System suitability
Samples: *System suitability solution 1* and *System suitability solution 2*
Suitability requirements
Resolution: The four principal bands from corn oil are clearly identified and separated, and the two principal bands from olive oil are clearly identified and separated.
[NOTE—Retardation factors (R_F) are provided for informational purposes only to aid in band identification. The R_F values for the four principal bands for USP Corn Oil RS are 0.20, 0.26, 0.30, and 0.34, and the R_F values for the two principal bands for USP Olive Oil RS are 0.20 and 0.26.]
Analysis
Samples: *Standard solution* and *Sample solution*
Predevelop the plate with methylene chloride to the upper edge. Dry the plate at 120° for 10 min.
Apply the *Samples* in separate bands to the previously marked starting point on an HPTLC plate.
Ensure that the bands are at least 3 mm above the surface of the mobile phase.
Develop over a path of 7 cm using *Mobile phase*. Allow the plate to dry in air.
Treat the plate with the *Spray reagent*.
Heat the plate at 120° for 3 min, and examine in daylight.
Acceptance criteria: The R_F values of the principal bands of the *Sample solution* correspond to those of the *Standard solution*.

ADDITIONAL REQUIREMENTS
- **USP REFERENCE STANDARDS 〈11〉**
USP Almond Oil RS
USP Borage Seed Oil RS
USP Canola Oil RS
USP Corn Oil RS
USP Cottonseed Oil RS
USP Evening Primrose Oil RS
USP Flax Seed Oil RS
USP Olive Oil RS
USP Palm Oil RS
USP Peanut Oil RS
USP Safflower Oil RS
USP Sesame Oil RS
USP Soybean Oil RS
USP Sunflower Oil RS

〈203〉 HIGH-PERFORMANCE THIN-LAYER CHROMATOGRAPHY PROCEDURE FOR IDENTIFICATION OF ARTICLES OF BOTANICAL ORIGIN

INTRODUCTION

This chapter describes a procedure for use in a USP *Identification* test that relies on the technique of high-performance thin-layer chromatography (HPTLC). It is applicable to the identification of articles of botanical origin in USP's compendia that serve as a drug substance or drug product, or as an ingredient or a dietary supplement. Careful control of the variables for the HPTLC technique is briefly described with references to more detailed information provided in equipment manuals. Reproducibility of the results allows comparison of closely related botanical materials that are not official ingredients. The analytical technique uses high-performance plates, appropriate equipment to control variables, and a system suitability test for purposes of performance qualification. [NOTE—See *Identification of Articles of Botanical Origin Using High-Performance Thin-Layer Chromatography Procedure* 〈1064〉 for additional information.]

REQUIRED EQUIPMENT

The equipment used for HPTLC technique consists of the following:

- Plates: Unless otherwise specified in the individual monograph, use plates coated with a uniform 200-µm layer of porous (60-Å pore size) silica gel having irregular particles of 2–10 µm and an average particle size of 5 µm, a polymeric binder, and a fluorescence indicator (F_{254}) of 20 × 10 cm. [NOTE—Chromatographic methods using high-performance thin-layer chromatographic glass plates are preferred over aluminum-backed sheets because of greater mechanical stability.]
- A device suitable for the application of specified volumes of samples as bands with specified length at the specified positions
- A suitable chromatographic chamber (for example, a twin trough chamber) allowing for control of saturation and developing distance
- A device suitable for controlling the activity of the stationary phase via relative humidity
- A device suitable for reproducible drying of the developed plate
- A device suitable for treatment of the plate with derivatization reagent, if required
- A device suitable for heating as part of the derivatization procedure, if required
- A system suitable for documentation of chromatograms under UV 254 nm, UV 366 nm, and white light

Each of these devices as well as the system as a whole should pass installation qualification (IQ), operational qualification (OQ), and performance qualification (PQ) in order to assure that the instruments are working according to their specifications to control the variables within their intended ranges. [NOTE—See *Analytical Instrument Qualification* 〈1058〉 for additional information.] Installation qualification and operational qualification are typically performed by the instrument manufacturer. The system suitability test is performed by the analyst as proof of performance qualification.

General Chapters

PROCEDURE

Preparation of Test Solution

Unless otherwise stated in an individual monograph, 100 mg of a powdered botanical ingredient, 10 mg of a dry extract or fraction, or the amount of a dosage form containing the equivalent of the aforementioned quantities of the botanical ingredient is sonicated for 15 min with 1 mL of methanol. After centrifugation the filtrate or supernatant is used as the *Sample solution*. Unless otherwise stated in an individual monograph, 50 µL of an essential oil is dissolved in 1 mL of toluene and used as the *Sample solution*.

Preparation of the Standard Solutions

Unless otherwise stated in an individual monograph, USP Reference Standards of individual marker compounds are dissolved at a concentration of 1 mg/mL in methanol. The USP Reference Standard extracts are shaken and sonicated in methanol at a concentration of 10 mg/mL or, for essential oils, the USP Reference Materials are dissolved in toluene at a concentration of 50 µL/mL.

Sample Application and Plate Layout

Samples are applied as narrow bands of 8.0 ± 0.5 mm length at a distance of 8.0 ± 0.5 mm from the lower edge of the plate. The system suitability standards are applied on the lane nearest to the edge at NLT 20 mm from the edge of the plate. The distance between tracks (center to center) is NLT 11.0 ± 0.5 mm. All application volumes are specified in the individual monograph. Application volumes usually range from 2.0 to 10.0 µL. The developing distance is marked with a pencil close to one of the edges of the plate before the development, although an electronic solvent front detection device may be substituted.

Preconditioning of the Plate

Following sample application and unless otherwise stated in an individual monograph, the plate is conditioned at a relative humidity of 33% for a minimum of 10 min (for example, by standing in a closed chamber containing a saturated solution of magnesium chloride).

Preparation of the Developing Chamber and Development of the Plate

Where a twin trough chamber is used, the rear trough is fitted with filter paper. The chamber is charged with a sufficient volume of developing solvent to wet the filter paper completely and achieve a level of developing solvent of exactly 5 mm in both troughs. With the lid closed, the chamber is left 20 min for saturation. The plate is introduced in a vertical position into the front trough of the chamber so that the coating layer faces the filter paper. When the mobile phase has reached a distance

corresponding to a development path of 6 cm, the plate is removed from the chamber and dried in a vertical position in a stream of cold air that does not affect the integrity of the separated zones. Other chamber configurations and developing distances may be specified in an individual monograph. [NOTE—Other development chambers may be employed if the results obtained fulfill all of the system suitability criteria.]

Derivatization Procedure

Where derivatization reagents are used, defined volumes of reagents in solution (typically 1–2 mL) are homogeneously sprayed onto the plate or the plate is immersed into the reagent solution at a defined speed and for a defined dwell time. [NOTE—Immersion speed of 50 mm/s and dwell time of 1 s works for most nonaqueous reagents.]

Visualization

Chromatograms on the plate are visualized as stated in an individual monograph. Observation and evaluation may be performed under UV 254 nm, UV 366 nm, or white light prior to and after derivatization.

System Suitability

To check the suitability of the system for resolution, position, and color of the bands, unless otherwise stated in an individual monograph, two or more reference substances are selected that have similar but just separable R_f values under the chromatographic conditions to be used; for example, chlorogenic acid (blue) and hyperoside (yellow-orange) in chromatographic systems used for flavonoids. USP Reference Standard mixtures for system suitability may be provided, or the substances designated to check the system suitability for resolution, position, and colors of the bands may be included in the USP Reference Standard extracts. Description of the resolution, position, and colors for the key bands of the reference material fingerprint should match the description in the monograph within a specified tolerance range. The system suitability requirements in an individual monograph are satisfied when the results obtained comply with those specified in the monograph.

Evaluation and Acceptance Criteria

Chromatograms of the *Sample solution* and *Standard solution* are compared against the description in the *Acceptance criteria* section of the monograph with respect to zone position, zone separation, color, and relative intensity.

Documentation

Documentation is necessary to record the results in an auditable manner to comply with current good manufacturing practices. Proper documentation tools should be employed; for example, a camera suitable for taking digital pictures under UV and white light and an imaging software suitable for archiving, retrieving, and analyzing the results makes it easy to maintain electronic records.

LIMIT TESTS

〈206〉 ALUMINUM

This procedure is provided to demonstrate that the content of aluminum (Al) does not exceed the limit given in the individual monograph of a substance labeled as intended for use in hemodialysis. [NOTE—The *Standard Preparations* and the *Test Preparation* may be modified, if necessary, to obtain solutions of suitable concentrations adaptable to the linear or working range of the instrument.]

NITRIC ACID DILUENT

Transfer 40 mL of nitric acid to a 1000-mL volumetric flask, and dilute with water to volume.

STANDARD PREPARATIONS

Treat some aluminum wire with 6 N hydrochloric acid at 80° for a few minutes. Dissolve about 100 mg of the treated wire, accurately weighed, in a mixture of 10 mL of hydrochloric acid and 2 mL of nitric acid by heating at about 80° for approximately 30 minutes. Continue heating until the volume is reduced to about 4 mL. Cool to room temperature, and add 4 mL of water. Evaporate to about 2 mL by heating. Cool, and transfer this solution, with the aid of water, to a 100-mL volumetric flask, dilute with water to volume, and mix. Transfer 10.0 mL of this solution to a second 100-mL volumetric flask, dilute with water to volume, and mix. Transfer 1.0 mL of this solution to a third 100-mL volumetric flask, dilute with water to volume, and mix. The concentration of aluminum in this *Standard Preparation* is about 1.0 µg per mL. If a more diluted *Standard Preparation* is required, transfer 1.0-, 2.0-, and 4.0-mL portions of this solution to separate 100-mL volumetric flasks, dilute with *Nitric Acid Diluent* to volume, and mix. These solutions contain 0.01, 0.02, and 0.04 µg of Al per mL, respectively.

TEST PREPARATION

Unless otherwise directed in the monograph, transfer an accurately weighed amount (in g) of the test substance, as specified in the monograph, to a 100-mL plastic volumetric flask, add 50 mL of water, and sonicate for 30 minutes. Add 4 mL of nitric acid, dilute with water to volume, and mix.

PROCEDURE

Determine the absorbances of the *Standard Preparations* and the *Test Preparation* at the aluminum emission line at 309.3 nm with a suitable atomic absorption spectrophotometer (see *Atomic Absorption Spectroscopy* ⟨852⟩) equipped with an aluminum hollow-cathode lamp and a flameless electrically heated furnace, using the *Nitric Acid Diluent* as the blank. Plot the absorbances of the *Standard Preparations* versus the content of Al, in µg per mL, drawing a straight line best fitting the three points. From the graph so obtained, determine the quantity, in µg, of Al in each mL of the *Test Preparation.* Calculate the amount of Al in the specimen taken, in µg per g, by multiplying this value by 100/W, where W is the weight, in g, of the substance taken to prepare the *Test Preparation.*

⟨207⟩ TEST FOR 1,6-ANHYDRO DERIVATIVE FOR ENOXAPARIN SODIUM

The following procedure is used to determine the levels of 1, 6-anhydro forms in enoxaparin sodium. [NOTE—The test for the 1,6-anhydro derivative is conducted only where specified in the individual monograph.]

INTRODUCTION

The disaccharides specified in this general chapter are listed by name and structure in *Appendix 1*; the oligosaccharides are listed in *Appendix 2*.

Depolymerization of heparin into enoxaparin sodium produces a partial but characteristic conversion of glucosamines at the reducing termini of oligosaccharide chains with terminal glucosamine 6-*O* sulfate, yielding 1,6-anhydro derivatives (see *Figure 1*).

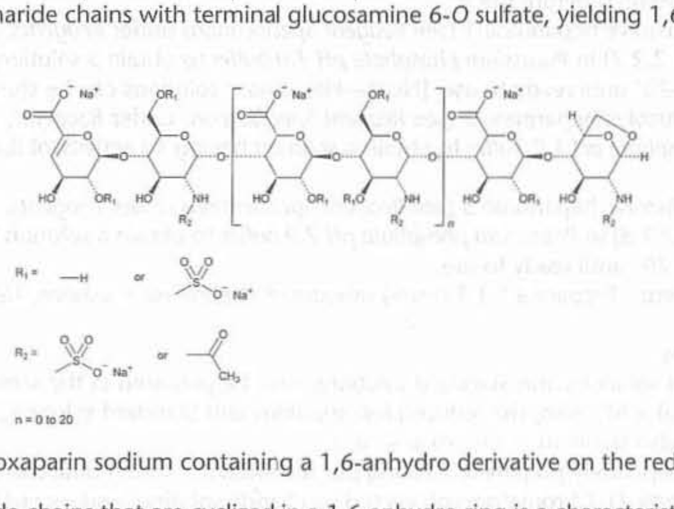

Figure 1. Structure of enoxaparin sodium containing a 1,6-anhydro derivative on the reducing end of the chain.

The percentage of oligosaccharide chains that are cyclized in a 1,6-anhydro ring is a characteristic of enoxaparin sodium.

General Chapters

PROCEDURES

• **Depolymerization of Enoxaparin Sodium by Heparinases and Resulting Oligosaccharides**

The assay involves HPLC analysis of a depolymerized enoxaparin sodium solution by a mixture of heparinases. After enzymatic depolymerization, the main 1,6-anhydro residues of enoxaparin sodium observed are 1,6-anhydro ΔIIS and 1,6-anhydro ΔIIS^{epi}, and 1,6-anhydro ΔIS and 1,6-anhydro ΔIS–IS^{epi} (see *Appendix 2.*).

The 1,6-anhydro ΔIS–IS^{epi} tetrasaccharide (2-*O*-sulfated mannosamine form) is not completely cleaved by the heparinases. The two disaccharides (1,6-anhydro ΔIIS and 1,6-anhydro ΔIIS^{epi}), which generally co-elute, are poorly resolved with respect to ΔIIA (see *Appendix 1*), especially because the latter occurs as two anomers: α and β . To allow quantitation of 1,6-anhydro ΔIIS and 1,6-anhydro ΔIIS^{epi}, the enoxaparin sodium sample already depolymerized by heparinases is then reduced by sodium borohydride (see *Figure 2*).

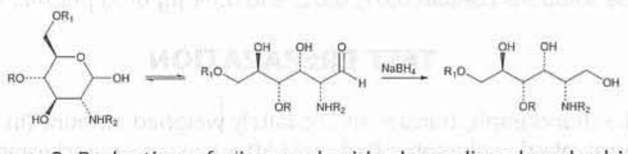

Figure 2. Reduction of oligosaccharides by sodium borohydride

The sodium borohydride reduction eliminates the $\alpha \leftrightarrow \beta$ anomeric effect by opening the terminal oligosaccharide ring. The four 1,6-anhydro derivatives (see *Appendix 2.*) are not reduced by sodium borohydride because the ring opening is blocked by the 1,6-anhydro bridge. The reduction of the oligosaccharides decreases their retention time, whereas the retention time of the 1,6-anhydro derivatives remains unchanged. Thus, it is possible to separate the two compounds—1,6-anhydro ΔIIS and 1,6-anhydro ΔIIS^{epi}—from the reduced ΔIIA disaccharide peak. [Note—1,6-Anhydro ΔIIS and 1,6-anhydro ΔIIS^{epi} are eluted as two nonresolved peaks and are quantitated together as a single compound, 1,6-anhydro ΔIIS. Therefore, for the purpose of simplification, the epimeric form is not referred to in the remaining text.]

• **Procedure**

Solutions

Solution A: Dissolve 0.280 g of monobasic sodium phosphate in 950 mL of water, adjust with phosphoric acid to a pH of 3.0, and dilute with water to 1000 mL.

Solution B: Dissolve 140 g of sodium perchlorate in 950 mL of *Solution A,* adjust with phosphoric acid to a pH of 3.0, and dilute with *Solution A* to 1000 mL.

Mobile phase: Use variable mixtures of filtered and degassed *Solution A* and *Solution B* as directed in *Chromatographic system.*

Sodium/Calcium acetate pH 7.0 solution: Dissolve 10 mg of bovine serum albumin and 32 mg of calcium acetate in 60 mL of water. Add 580 µL of glacial acetic acid, and adjust with 2 M sodium hydroxide to a pH of 7.0. Transfer to a 100-mL volumetric flask, and dilute with water to volume. Pass the solution through a filter having a porosity of 0.45 or 0.22 µm.

Potassium phosphate pH 7.0 buffer: Dissolve 68 mg of monobasic potassium phosphate and 10 mg of bovine serum albumin in 30 mL of water in a 50-mL volumetric flask. Adjust with potassium hydroxide, if necessary, to a pH of 7.0, and dilute with water to volume. Pass the solution through a filter having a porosity of 0.45 or 0.22 µm.

Sodium borohydride solution: Dissolve 12 mg of sodium borohydride in 400 µL of water, and mix on a vortex mixer. [Note—Prepare fresh *immediately* before use.]

Heparinase 1 solution: Dissolve heparinase 1 (see *Reagent Specifications* under *Reagents, Indicators,* and *Solutions*) [reference: heparin lyase I, EC 4.2.2.7] in *Potassium phosphate pH 7.0 buffer* to obtain a solution having an activity of 0.4 IU per mL. Store the solution at –20° until ready to use. [Note—Heparinase solutions can be stored for 3 months at –20°.]

Heparinase 2 solution: Dissolve heparinase 2 (see *Reagent Specifications* under *Reagents, Indicators,* and *Solutions* [no EC number] in *Potassium phosphate pH 7.0 buffer* to obtain a solution having an activity of 0.4 IU per mL. Store the solution at –20° until ready to use.

Heparinase 3 solution: Dissolve heparinase 3 (see *Reagent Specifications* under *Reagents, Indicators,* and *Solutions* [reference: heparitinase I, EC 4.2.2.8] in *Potassium phosphate pH 7.0 buffer* to obtain a solution having an activity of 0.4 IU per mL. Store the solution at –20° until ready to use.

Heparinases 1, 2, 3, solution: Prepare a 1:1:1 (v:v:v) mixture of *Heparinase 1 solution, Heparinase 2 solution,* and *Heparinase 3 solution.*

Peak identification solutions

[Note—The depolymerized test solutions and Standard solutions must be prepared at the same time. Depolymerized test solutions are stable for 1 month at –20°. Also, the reduced test solutions and Standard solutions must be prepared at the same time. Reduced solutions are also stable for 1 month at –20°.]

Disaccharide solutions: Separately prepare a 0.25 mg per mL solution of each disaccharide[1] ΔIA, ΔIIA, ΔIIIA, ΔIVA, ΔIS, ΔIIS, ΔIIIS, ΔIVS (see *Appendix 1*). Chromatograph each disaccharide solution, and record the peak responses.

[1] Suitable disaccharides are available from Grampian Enzymes (GE-H1001, GE-G1002, GE-H1003, GE-H1004, GE-H1005, GE-H1006, GE-H1007, GE-H1008), Nisthouse, Harray, Orkney, KW17 2LQ, United Kingdom, Tel: 01856 771771, Scottish Local Authority: Orkney Islands.

Reduced disaccharide solutions: To 60 µL of each *Disaccharide solution,* add 10 µL of freshly prepared *Sodium borohydride solution.* Mix on a vortex mixer, and allow to stand at room temperature for at least 4 hours. Chromatograph each solution, and record the peak response.

Blank solution: Prepare a mixture of 20 µL of water, 70 µL of *Sodium/Calcium acetate pH 7.0 solution,* and 100 µL of the *Heparinases 1, 2, 3 solution.* Mix gently by inversion, and allow to stand for at least 48 hours in a 25° water bath. Prepare a mixture of 60 µL of this depolymerized solution with 10 µL of freshly prepared *Sodium borohydride solution.* Homogenize, and allow to stand at room temperature for at least 4 hours. Chromatograph the resulting solution, and record the peak responses.

Test solution 1: Prepare two solutions, each containing 20 mg of enoxaparin sodium in 1 mL of water.

Standard solution 1: Prepare one solution containing 20 mg of USP Enoxaparin Sodium RS in 1 mL of water.

Test solution 2: For each solution, prepare a mixture of 20 µL of *Test solution 1,* 70 µL of *Sodium/Calcium acetate pH 7 solution,* and 100 µL of *Heparinases 1, 2, 3 solution.* Mix gently by inversion, and allow to stand for at least 48 hours in a 25° water bath. After 48 hours of depolymerization, chromatograph the solution, and record the peak responses.

Standard solution 2: Prepare a mixture of 20 µL of *Standard solution 1,* 70 µL of *Sodium/Calcium acetate pH 7 solution,* and 100 µL of *Heparinases 1, 2, 3 solution.* Mix gently, and allow to stand for at least 48 hours in a 25° water bath. After 48 hours of depolymerization, chromatograph the solution, and record the peak responses.

Test solution 3: For each depolymerized test solution, prepare a mixture of 60 µL of *Test solution 2* and 10 µL of freshly prepared *Sodium borohydride solution.* Homogenize, and allow to stand loosely capped at room temperature for at least 4 hours before injecting into the chromatograph. *Test Solution 3* is stable for 48 hours at room temperature.

Standard solution 3: Prepare a mixture of 60 µL of *Standard solution 2* and 10 µL of freshly prepared *Sodium borohydride solution.* Homogenize and mix on a vortex mixer, and allow to stand loosely capped at room temperature for at least 4 hours before injecting into the chromatograph. *Standard solution 3* is stable for 48 hours at room temperature.

Chromatographic system

(See *Chromatography* ⟨621⟩.)

The liquid chromatograph is equipped with a 234-nm detector and a 3-mm × 25-cm column that contains 5-µm packing L14. A guard column packed with the same material should also be used. The flow rate is 0.45 mL per minute, the column temperature is maintained at 50°, and the injection volume is 10 µL. The chromatograph is programmed as follows.

Time (min)	Solution A (%)	Solution B (%)	Elution
0–20	97→65	3→35	Linear gradient
20–50	65→0	35→100	Linear gradient
50–60	0	100	Isocratic
60–61	0→97	100→3	Linear gradient for re-equilibration
61–79	97	3	Isocratic for re-equilibration

Chromatograph the reduced *Test solution 3* and the reduced *Standard solution 3,* and record the peak responses as directed for *Procedure.*

Depolymerization suitability test: The ratio of the peak area of 1,6-anhydro-ΔIS-IS to that of 1,6-anhydro ΔIS is not more than 1.15 for the depolymerized *Standard solution 2.*

Column performance suitability test: Identify the peaks corresponding to reduced ΔIA and 1,6-anhydro-ΔIS for the *Standard solution 3:* the retention time of reduced ΔIS is between 27 and 33 minutes for the depolymerized and reduced *Standard solution 3;* and the resolution, *R,* between reduced ΔIA and 1,6-anhydro-ΔIS is not less than 1.5.

Reduction suitability test: The ratio of the peak area of ΔIS disaccharide to that of reduced ΔIS in the depolymerized and reduced *Standard solution 3* and *Test solution 3* is not more than 0.02%.

Procedure/Calculation: Separately inject equal volumes of the reduced *Test solutions 3* and the reduced *Standard solution 3* into the chromatograph. Use the normalized area percentage method for calculation. Each peak is integrated from the dwell volume peak to the last detected peak. Measure the area of each analyte peak after excluding solvent peaks at the beginning of the chromatogram and in the *Blank solution.* Using the previously obtained chromatograms of the *Reduced disaccharide solutions,* identify peaks belonging to the eight reduced disaccharides in the chromatograms for *Test solution 3* and *Standard solution 3.* The peaks belonging to 1,6-Anhydro ΔIS, 1,6-Anhydro ΔIIS, and 1,6-Anhydro ΔIS-IS^{epi} are identified from the relative retention times provided in *Table 1* and the Reference chromatogram provided with USP Enoxaparin Sodium RS. Once the peaks have been identified, use the values in *Table 1* to calculate the (w/w) percentage of the three main 1,6-anhydro derivatives obtained after depolymerization of enoxaparin sodium using the following formula:

$$\% \text{ 1,6-anhydro i (w/w)} = (100 \times MW_i \times A_i) / \Sigma(MW_x \times A_x)$$

MW_i = molecular weight of the 1,6-anhydro peak i

A_i = area of the 1,6-anhydro peak i

MW_x = molecular weight of either the peak X or the zone X specified by its retention time

General Chapters

A_x = area of either the peak X or the zone X specified by its retention time

[NOTE—Once the method is established, the peaks belonging to the different di- and tetrasaccharides can be easily identified using the USP Enoxaparin Sodium RS chromatogram. Thus, the use of the disaccharide Standards is only needed during the method-implementation stage.]

Calculate the molar percentage of components containing a 1,6-anhydro structure at the reducing end of their chain in the enoxaparin sodium test sample according to the following formula:

$$\%1.6anhydro = 100 \times \frac{MW}{\sum MW_x \times Area_x} \times (Area\Delta Is1.6anydro + Area\Delta IIs1.6anhydro + Area\Delta Is-Is1.6anhydro)$$

in which MW is the mass-average molecular mass (see *Identification* test *D* under *Enoxaparin Sodium*); MW_x and $Area_x$ are the molecular weight and the area, respectively, of either the peak X or the range X specified by its retention time. The molar percentage of components having a 1,6-anhydro structure at the reducing end of their chain is between 15% and 25%. Typical retention times and molecular masses attributed to different oligosaccharide structures are provided in *Table 1*.

Table 1. Typical Relative Retention Times (t_{RR}) and Molecular Masses Attributed to Different Compounds*

Compound	t_{RR}	Molecular Mass (Daltons)
—	< 0.25	741
Reduced ΔIVA	0.25	401
—	0.25 < t_{RR} < 0.51	741
Reduced ΔIVS	0.51	461
—	0.51 < t_{RR} < 0.55	483
Reduced ΔIIA	0.55	503
—	0.55 < t_{RR} < 0.59	503
1,6-Anhydro ΔIIS	0.59	443
—	0.59 < t_{RR} < 0.64	503
Reduced ΔIIIA	0.64	503
—	0.64 < t_{RR} < 0.72	533
Reduced ΔIIS	0.72	563
—	0.72 < t_{RR} < 0.80	563
Reduced ΔIIIS	0.80	563
—	0.80 < t_{RR} < 0.88	583
Reduced ΔIA	0.88	605
—	0.88 < t_{RR} < 0.90	635
1,6-Anhydro ΔIS	0.90	545
—	0.90 < t_{RR} <0.98	635
Reduced ΔIIA-IVSglu	0.98	1066
—	0.98< t_{RR} <1.00	635
Reduced ΔIS	1.00	665
—	1.00< t_{RR} <1.04	665
ΔIS	1.04	665
—	1.04< t_{RR} <1.10	1228
Reduced ΔIIA-IISglu	1.10	1168
—	1.10< t_{RR} <1.27	1228
1,6-Anhydro ΔIS-IS	1.27	1210
—	t_{RR} >1.27	1228

* Relative retention times were obtained with a depolymerized and reduced batch of enoxaparin sodium. They are expressed relative to the retention time of the main peak corresponding to reduced ΔIS. Note that according to the quality of the column, relative retention times can change slightly.

ADDITIONAL REQUIREMENTS

- **USP REFERENCE STANDARDS 〈11〉**
  USP Enoxaparin Sodium RS

APPENDICES

• Appendix 1: Standard Disaccharide Structures

ΔIVA	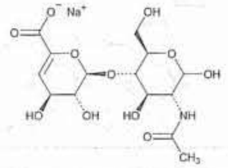		ΔUA-(1→4)α-GlcNAc
ΔIVS	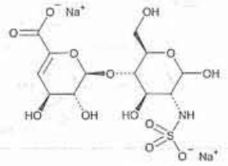		ΔUA-(1→4)α-GlcN(NS)
ΔIIA	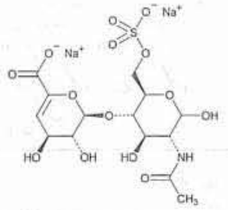		ΔUA-(1→4)α-GlcNAc(6S)
ΔIIIA	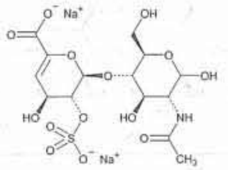		ΔUA-2S-(1→4)α-GlcNAc
ΔIIS	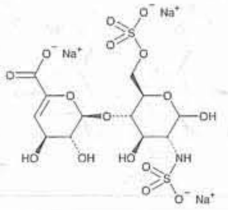		ΔUA-(1→4)α-GlcN (NS,6S)
ΔIIIS	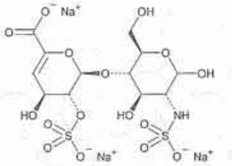		ΔUA-2S-(1→4)α-GlcN (NS)
ΔIA	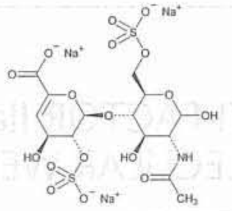		ΔUA-2S-(1→4)α-GlcNAc(6S)
ΔIS	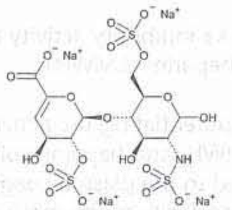		UA-2S-(1→4)α-GlcN (NS,6S)

• **Appendix 2: Oligosaccharide Structures**

1,6-Anhydro ΔIS or 1,6-Anhydro ΔIS glucose	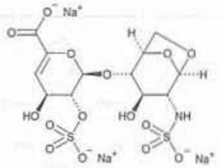
1,6-Anhydro ΔIIS or 1,6-Anhydro ΔIIS glucose	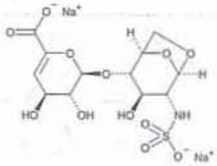
1,6-Anhydro ΔIIS epi or 1,6-Anhydro ΔIIS mannose	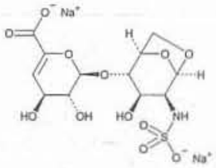
ΔIIA-IVSglu	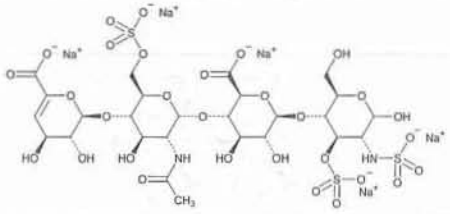
ΔIIA-IISglu	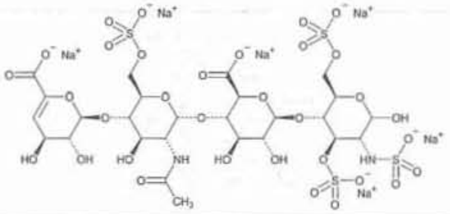
1,6-Anhydro ΔIS-IS epi or 1,6-Anhydro ΔIS-IS mannose	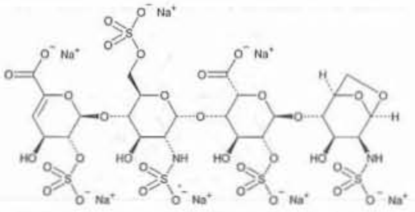

⟨208⟩ ANTI-FACTOR Xa AND ANTI-FACTOR IIa ASSAYS FOR UNFRACTIONATED AND LOW MOLECULAR WEIGHT HEPARINS

This chapter provides information and procedures to determine factor Xa inhibitory activity and factor IIa (thrombin) inhibitory activity for unfractionated heparin (UFH) and low molecular weight heparins (LMWH).

INTRODUCTION

Unfractionated heparin and LMWH exert their anticoagulant effect by potentiating the activity of plasma coagulation inhibitors. Of all the commonly known glycosaminoglycans, only UFH, LMWH, and heparan sulfate (hereafter referred to generally as heparin) contain a specific pentasaccharide sequence that can bind to the plasma coagulation inhibitor, antithrombin (AT). AT-dependent assays, therefore, are developed to ensure the specificity of the methods for measuring the anticoagulant activity of heparin. Binding of heparin to AT induces a conformational change, thereby increasing AT's binding to and

subsequent inactivation of activated blood coagulation factors. The major coagulation targets for the AT–heparin complex are factor IIa (thrombin) and coagulation factor Xa. Once AT is activated by the pentasaccharide sequence of heparin, it interacts with factors Xa and IIa via its reactive center loop. For efficient inhibition of thrombin, the heparin molecule also must bind to both AT and IIa. This interaction requires an extra length of approximately 13 monosaccharides attached at the nonreducing end of the AT-binding heparin pentasaccharide sequence. This minimum heparin motif for AT inhibition of thrombin, known as the C-domain, has an approximate molecular weight of 5400 Da. Although the potentiation of AT inactivation of factor Xa also depends on molecular weight, the additional saccharide units of the C-domain are not essential, and heparin with a molecular weight less than 5400 Da can potentiate AT to inactivate factor Xa. By convention, the potency ratio of anti-factor Xa to anti-factor IIa for UFH is 1. Unfractionated heparin is heterogenous and polydisperse but contains little or no material of molecular weight less than 5400 Da. The mean molecular weights of LMWH products are lower than those of UFH, and they contain a higher proportion of material that weighs less than 5400 Da. The potency ratio of anti-factor Xa to anti-factor IIa for LMWH products is greater than 1.5. This chapter describes assay procedures for the measurement of anti-factor Xa and anti-factor IIa activity of LMWH heparin in the presence of AT.

In the test system, heparin is bound to AT, and factor IIa or factor Xa added to the mixture binds to the heparin–AT complex. The residual factor IIa or factor Xa not inhibited by the heparin–AT complex is quantified by a chromogenic substrate that is specific for either factor IIa or factor Xa and is added in the final step. Analysts note an inverse relationship wherein more color is produced by more residual enzyme, which equates to less heparin activity.

As for any enzymatic assay, temperature and timing of the reaction, proper handling of the reagents, and the order in which the reagents are added are critical to the optimal performance of the assay.

Anti-Factor Xa and Anti-Factor IIa Assays for Unfractionated Heparin

• Anti-Factor Xa Activity for UFH

The following procedure is used where specified in the individual monographs. This assay can be performed manually in plastic tubes utilizing heated block stations or water bath. Microtiter plate equipment with a reader and automated coagulometer can improve reproducibility and throughput.

pH 8.4 buffer: Dissolve amounts of tris(hydroxymethyl)aminomethane, edetic acid or edetate sodium, and sodium chloride in water containing 0.1% of polyethylene glycol 6000 to obtain solutions having concentrations of 0.050 M, 0.0075 M, and 0.175 M, respectively. Adjust, if necessary, with hydrochloric acid or sodium hydroxide solution to a pH of 8.4.

Antithrombin solution: Reconstitute a vial of antithrombin (see *Reagents, Indicators, and Solutions—Reagent Specifications*) as directed by the manufacturer, and further dilute with *pH 8.4 buffer* to obtain a solution having a concentration of 1.0 Antithrombin IU/mL.

Factor Xa solution: Reconstitute bovine factor Xa as directed by the manufacturer (see *Factor Xa* in *Reagents, Indicators, and Solutions—Reagent Specifications*), and further dilute in *pH 8.4 buffer* to obtain a solution that gives an absorbance value of 0.65–1.25 at 405 nm when assayed as described below but using 30 µL of *pH 8.4 buffer* instead of 30 µL of the *Standard solutions* or the *Sample solutions*. [Note—*Factor Xa solution* contains about 3 nanokatalytic units/mL but can vary depending on the manufacturer of factor Xa or the substrate used.]

Chromogenic substrate solution: Prepare a solution of a suitable chromogenic substrate for amidolytic test (see *Reagents, Indicators, and Solutions—Reagent Specifications*) specific for factor Xa in water to obtain a concentration of 1 mM.

Stopping solution: 20% (v/v) solution of acetic acid

Standard solutions: Reconstitute the entire contents of an ampule of USP Heparin Sodium for Assays RS with water, and dilute with *pH 8.4 buffer* to obtain at least 5 dilutions in the concentration range of 0.03–0.375 USP Heparin Units/mL.

Sample solutions: Dissolve or dilute an accurately measured quantity of Heparin Sodium in *pH 8.4 buffer*, and dilute with the same buffer to obtain solutions having activities approximately equal to those of the *Standard solutions*.

Analysis: [Note—The procedure also can be performed using alternative platforms. Perform the test with each *Standard solution* and *Sample solution* in duplicate.]

To each of a series of suitable plastic tubes placed in a water bath set at 37°, transfer 120 µL of *pH 8.4 buffer*. Then separately transfer 30 µL of the different dilutions of the *Standard solutions* or the *Sample solutions* to the tubes. Add 150 µL of *Antithrombin solution*, prewarmed at 37° for 15 min, to each tube, mix, and incubate for 2 min. Add 300 µL of *Factor Xa solution*, prewarmed at 37° for 15 min, to each tube, mix, and incubate for 2 min. Add 300 µL of *Chromogenic substrate solution*, prewarmed at 37° for 15 min, to each tube, mix, and incubate for exactly 2 min. Add 150 µL of *Stopping solution* to each tube, and mix. Prepare a blank for zeroing the spectrophotometer by adding the reagents in reverse order, starting with the *Stopping solution* and ending with the addition of 150 µL of *pH 8.4 buffer*, and excluding the *Standard solutions* or the *Sample solutions*. Record the absorbance at 405 nm against the blank. The volume of the reactants can be increased or decreased to suit the assay format provided that the proportions of the reference sample or the test sample and the reagents are kept the same.

Calculations: Plot the log of the absorbance values of the *Standard solutions* and the *Sample solutions* vs. heparin concentrations in USP Units. Calculate the activity of heparin sodium in USP Units/mg using statistical methods for slope ratio assays. Calculate the anti-factor Xa activity of heparin sodium:

$$\text{Result} = A \times (S_T/S_S)$$

A = the potency of USP Heparin Sodium for Assays RS
S_T = slope of the line for the *Sample solutions*

General Chapters

S_S = slope of the line for the *Standard solutions*

Express the anti-factor Xa activity of the *Sample solution* as USP Heparin Units/mg, calculated on the dried basis. Calculate the ratio of anti-factor Xa activity against anti-factor IIa potency (see *Assay* below):

anti-factor Xa activity/anti-factor IIa potency

Acceptance criteria: 0.9–1.1

• **Anti-Factor IIa Activity for Unfractionated Heparin**

pH 8.4 buffer: Dissolve 6.10 g of tris(hydroxymethyl)aminomethane, 10.20 g of sodium chloride, 2.80 g of edetate sodium, and, if suitable, 0–10.00 g of polyethylene glycol 6000 and/or 2.00 g of bovine serum albumin in 800 mL of water. [Note—2.00 g of human albumin may be substituted for 2.00 g of bovine serum albumin.] Adjust with hydrochloric acid to a pH of 8.4, and dilute with water to 1000 mL.

Antithrombin solution: Reconstitute a vial of antithrombin (see *Reagents, Indicators, and Solutions—Reagent Specifications*) in water to obtain a solution of 5 Antithrombin IU/mL. Dilute this solution with *pH 8.4 buffer* to obtain a solution having a concentration of 0.125 Antithrombin IU/mL.

Thrombin human solution: Reconstitute thrombin human (factor IIa) (see *Reagents, Indicators, and Solutions—Reagent Specifications*) in water to obtain a solution of 20 Thrombin IU/mL, and dilute with *pH 8.4 buffer* to obtain a solution having a concentration of 5 Thrombin IU/mL. [Note—The thrombin should have a specific activity of NLT 750 IU/mg.]

Chromogenic substrate solution: Prepare a solution of a suitable chromogenic thrombin substrate for amidolytic test (see *Reagents, Indicators, and Solutions—Reagent Specifications*) in water to obtain a concentration of 1.25 mM.

Stopping solution: 20% (v/v) solution of acetic acid

Standard solutions: Reconstitute the entire contents of an ampule of USP Heparin Sodium for Assays RS with water, and dilute with *pH 8.4 buffer* to obtain at least four dilutions in the concentration range of 0.005–0.03 USP Heparin Unit/mL.

Sample solutions: Proceed as directed for *Standard solutions* to obtain concentrations of Heparin Sodium similar to those obtained for the *Standard solutions*.

Analysis: [Note—The procedure also can be performed using alternative platforms.] For each dilution of the *Standard solutions* and the *Sample solutions*, at least duplicate samples should be tested. Label a suitable number of tubes depending on the number of replicates that will be tested. For example, if five blanks will be used: B1, B2, B3, B4, and B5 for the blanks; T1, T2, T3, and T4 each at least in duplicate for the dilutions of the *Sample solutions*; and S1, S2, S3, and S4 each at least in duplicate for the dilutions of the *Standard solutions*. Distribute the blanks over the series in such a way that they accurately represent the behavior of the reagents during the experiments. [Note—Treat the tubes in the order B1, S1, S2, S3, S4, B2, T1, T2, T3, T4, B3, T1, T2, T3, T4, B4, S1, S2, S3, S4, B5.] Note that after each addition of a reagent, the incubation mixture should be mixed without allowing bubbles to form. Add twice the volume (100–200 µL) of *Antithrombin solution* to each tube containing one volume (50–100 µL) of either the *pH 8.4 buffer* or an appropriate dilution of the *Sample solutions* or the *Standard solutions*. Mix, but do not allow bubbles to form. Incubate at 37° for at least 1 min. Add to each tube 25–50 µL of *Thrombin human solution*, and incubate for at least 1 min. Add 50–100 µL of *Chromogenic substrate solution*. Note that all reagents, *Standard solutions*, and *Sample solutions* should be prewarmed to 37° just before use. The volume of the reactants can be increased or decreased to suit the assay format provided that the proportions of the reference sample or the test sample and the reagents are kept the same.

Two different types of measurements can be recorded:

1. Endpoint Measurement: Stop the reaction after at least 1 min with 50–100 µL of *Stopping solution*. Measure the absorbance of each solution at 405 nm using a suitable spectrophotometer (see *Ultraviolet-Visible Spectroscopy* ⟨857⟩). The RSD over the blank readings is less than 10%.
2. Kinetic Measurement: Follow the change in absorbance for each solution over 1 min at 405 nm using a suitable spectrophotometer (see ⟨857⟩). Calculate the change in absorbance/min (ΔOD/min). The blanks for kinetic measurement are also expressed as ΔOD/min and should give the highest values because they are carried out in the absence of heparin. The RSD over the blank readings is less than 10%.

Calculations: The statistical models for *Slope ratio assay* or *Parallel-line assay* can be used depending on which model best describes the correlation between concentration and response.

Slope ratio assay: For each series, calculate the regression of the log absorbance or the log change in absorbance/min against concentrations of the *Sample solutions* and of the *Standard solutions*, and calculate the potency of heparin sodium in USP Units/mL using statistical methods for slope ratio assays. Express the potency of heparin sodium/mg, calculated on the dried basis.

Parallel-line assay: For each series, calculate the regression of the absorbance or change in absorbance/min against log concentrations of the *Sample solutions* and the *Standard solutions*, and calculate the potency of heparin sodium in USP Units/mL using statistical methods for parallel-line assays. Express the potency of heparin sodium/mg, calculated on the dried basis.

Acceptance criteria: The potency of heparin sodium, calculated on the dried basis, is NLT 180 USP Heparin Units in each mg.

Anti-Factor Xa and Anti-Factor IIa Assays for Low Molecular Weight Heparins

• **Anti-Factor Xa Activity for Low Molecular Weight Heparin**

Acetic acid solution: Glacial acetic acid and water (42:58)

pH 7.4 polyethylene glycol 6000 buffer: Dissolve 6.08 g of tris(hydroxymethyl)aminomethane and 8.77 g of sodium chloride in 500 mL of water. Add 1.0 g of polyethylene glycol 6000 or 10.0 g of bovine serum albumin, adjust with hydrochloric acid to pH 7.4, and dilute with water to 1000 mL.

pH 7.4 buffer: Dissolve 6.08 g of tris(hydroxymethyl)aminomethane and 8.77 g of sodium chloride in 500 mL of water. Adjust with hydrochloric acid to pH 7.4, and dilute with water to 1000 mL.

pH 8.4 buffer: Dissolve 3.03 g of tris(hydroxymethyl)aminomethane, 5.12 g of sodium chloride, and 1.40 g of edetate sodium in 250 mL of water. Adjust with hydrochloric acid to a pH of 8.4, and dilute with water to 500 mL.

Human antithrombin solution: Reconstitute a vial of human antithrombin (see *Reagents, Indicators, and Solutions—Reagent Specifications*) in water to obtain a solution containing 5 Antithrombin Units per mL. Dilute this solution with *pH 7.4 polyethylene glycol 6000 buffer* to obtain a solution having a concentration of 1.0 Antithrombin Unit/mL.

Factor Xa solution: Reconstitute an accurately weighed quantity of bovine factor Xa (see *Reagents, Indicators, and Solutions—Reagent Specifications*) as directed by the manufacturer's instructions. Further dilute the stock solution with *pH 7.4 polyethylene glycol 6000 buffer* to obtain a solution that gives an increase in absorbance value at 405 nm of NMT 0.20 absorbance units/min or 0.8 absorbance units after 4 min of incubation with the chromogenic substrate when assayed as described below but using as an appropriate volume, *V*, the volume in µL of *pH 7.4 buffer* instead of *V* µL of the standard or the sample solution.

Chromogenic substrate solution: Prepare a solution of a suitable chromogenic substrate for amidolytic test (see *Reagents, Indicators, and Solutions—Reagent Specifications*) for factor Xa in water to obtain a concentration of about 3 mM. Dilute with substrate *pH 8.4 buffer* to obtain a solution having a concentration of 0.5 mM. [Note—Preheat reagents to 37 ± 1° 15 min before use.]

Standard solutions: Reconstitute and dilute the entire contents of an ampule of USP Low Molecular Weight Heparin for Bioassays RS with distilled water and then further dilute with *pH 7.4 buffer* to obtain at least four dilutions in the concentration range of 0.025–0.2 USP anti-factor Xa Units/mL.

Sample solutions: Proceed as directed for *Standard solutions* to obtain concentrations of LMWH similar to those obtained for the *Standard solutions.*

Analysis

Samples: *Standard solutions, Sample solutions, Human antithrombin solution, pH 7.4 buffer, Factor Xa solution, Chromogenic substrate solution,* and *Acetic acid solution*

Label 18 suitable tubes: B1 and B2 for blanks; T1, T2, T3, and T4 each in duplicate for the dilutions of the *Sample solutions;* and S1, S2, S3, and S4 each in duplicate for the dilutions of the *Standard solutions.* [Note—Treat the tubes in the order B1, S1, S2, S3, S4, T1, T2, T3, T4, T1, T2, T3, T4, S1, S2, S3, S4, B2.] To each tube add 50 µL of *Human antithrombin solution* and an equal volume, *V*, of either the blank, *pH 7.4 buffer,* or an appropriate dilution of the *Sample solutions* or the *Standard solutions.* Mix, but do not allow bubbles to form. Incubate at 37° for 1.0 min. Add to each tube 100 µL of *Factor Xa solution,* and incubate for 1.0 min. Add 250 µL of *Chromogenic substrate solution.* Stop the reaction after about 4.0 min with 250 µL of *Acetic acid solution.* Measure the absorbance of each solution at 405 nm using a suitable spectrophotometer (see ⟨857⟩). Use quartz or disposable polystyrene cuvettes. The volume of the reactants can be increased or decreased to suit the assay format provided that the proportions of the reference sample or the test sample and the reagents are kept the same.

System suitability: The assay is valid if the following requirements are met:

1. A blank solution gives an increase in absorbance value at 405 nm of NMT 0.20 absorbance units/min (or 0.8 absorbance units in total) when assayed using an appropriate volume (50 µL) of *pH 7.4 buffer* instead of 50 µL of the *Standard solution* or the *Sample solution.*
2. The reading of the blank B2 is not more than ±0.05 absorbance units against blank B1.

Calculations: For this bioassay, parallel-line or slope ratio analysis can be applied.

Calculate the potency of the test sample in USP anti-factor Xa Unit/mL, using a statistical model for parallel assays, plotting absorbance against log concentrations of the *Sample solutions* and of the *Standard solutions.* In some cases, log transformation of absorbance may be needed to obtain linearity for the dose–response curves. The assay is valid when the data fulfill the acceptance criteria for regression, linearity, and parallelism as required for parallel line assay. For slope ratio analysis, plot absorbance against concentrations of *Sample solutions* and of the *Standard solutions.* In some cases, log transformation of absorbance may be needed to obtain linearity for the dose–response curves. The assay is valid when the data fulfill the acceptance criteria for regression, linearity, and common intercept as required for slope ratio assay (see *Design and Analysis of Biological Assays* ⟨111⟩ and *Analysis of Biological Assays* ⟨1034⟩).

Express the anti-factor Xa activity of sample/mg, calculated on the dried basis:

Anti-factor Xa USP Unit/mg = [standard potency (USP Unit/mL) × potency ratio]/[sample concentration (mg/mL)]

• **Anti-Factor IIa Activity for Low Molecular Weight Heparin**

Acetic acid solution, pH 7.4 polyethylene glycol 6000 buffer, pH 7.4 buffer, pH 8.4 buffer, and Human antithrombin solution: Proceed as directed in the *Anti-Factor Xa Activity*, except that the concentration of the *Human antithrombin solution* is 0.5 Antithrombin Unit/mL.

Thrombin human solution: Reconstitute thrombin (see *Reagents, Indicators, and Solutions—Reagent Specifications*) in water, and dilute in *pH 7.4 polyethylene glycol 6000 buffer* to obtain a solution having a concentration of 5 Thrombin Units/mL. Use the *Thrombin human solution* immediately after preparation.

Chromogenic substrate solution: Prepare a solution of a suitable chromogenic substrate for the amidolytic test (see *Reagents, Indicators, and Solutions—Reagent Specifications*) for thrombin in water to obtain a concentration of about 3 mM. Dilute immediately before use with *pH 8.4 buffer* to 0.5 mM.

Standard solutions: Reconstitute and dilute the entire contents of an ampule of USP Low Molecular Weight Heparin for Bioassays RS with distilled water, and further dilute with *pH 7.4 buffer* to obtain at least four dilutions having concentrations in the range of 0.015–0.075 USP Unit of anti-factor IIa activity/mL.

Sample solutions: Proceed as directed for *Standard solutions* to obtain concentrations of LMWH similar to those obtained for the *Standard solutions*.

Procedure: Proceed as directed under *Anti-Factor Xa activity*, but use *Thrombin human solution* instead of *Factor Xa solution* and use the *Human antithrombin solution* as described above.

System suitability: The assay is valid if the following requirement is met:

1. The reading of blank B2 is NMT ±0.05 absorbance units against blank B1.

Calculations: Proceed as directed for calculation of *Anti-Factor Xa Activity*.

ADDITIONAL REQUIREMENTS

- **USP Reference Standards 〈11〉**

  USP Heparin Sodium for Assays RS

  USP Low Molecular Weight Heparin for Bioassays RS

General Chapters

〈209〉 LOW MOLECULAR WEIGHT HEPARIN MOLECULAR WEIGHT DETERMINATIONS

This chapter provides procedures used to determine molecular weight (MW) distribution and weight-average molecular weight for low molecular weight heparins (LMWH).

INTRODUCTION

Low molecular weight heparins are prepared from Heparin Sodium, USP, by partial depolymerization. LMWHs are polydisperse, i.e., they are made up of polysaccharide chains with a range of molecular weights. The MW distribution is a defining characteristic for each LMWH product. The *USP* contains specific monographs for LMWH products, including limits on molecular weight distribution parameters.

Most techniques for determination of the MW distribution of LMWHs make use of gel permeation chromatography (GPC), sometimes referred to as size exclusion chromatography (SEC). In order to derive molecular weight distribution from a chromatogram, it is necessary to know the relationship between retention time and MW. This chapter describes a GPC method that is calibrated using the USP Low Molecular Weight Heparin Molecular Weight Calibrant Reference Standard (RS). This preparation is a single polydisperse Standard for which the distribution of molecular weights is described in the form of a Broad Standard Table (see the USP Certificate for USP Low Molecular Weight Heparin Molecular Weight Calibrant RS) that lists the log of the molecular weight (log MW) of a number of reference points and the matching percent fractions by weight of the calibrant above or below these reference points. The Broad Standard Table is used together with a chromatogram of the calibrant to fit a suitable function, in this case a third degree polynomial, to the relationship between log MW and retention time, thus generating a calibration curve for the chromatographic system. With this calibration curve, the analyst calculates the weight-average molecular weight and distribution parameters from the chromatogram of a sample of LMWH.

All the calculations described in this chapter may be performed using a spreadsheet program, but this method is not recommended as it is laborious and open to human error. Proprietary software capable of automating the calibration and molecular weight calculations can be obtained from a number of chromatography systems manufacturers.

PROCEDURE

- **Molecular Weight Measurements of Low Molecular Weight Heparins by Gel Permeation Chromatography**

  The following procedure, with any necessary variations, is used where specified in the individual monographs.

  Ammonium acetate stock solution: 1 M ammonium acetate in water

  Sodium azide solution: 1% (w/v) sodium azide in water

  Mobile phase: Transfer 100 mL of *Ammonium acetate stock solution* to a 1-L volumetric flask, add 20 mL of *Sodium azide solution*, and dilute with water to volume. Filter using a nylon membrane of 0.45-µm pore size prior to use.

  Calibration solution: Add 2 mL of *Mobile phase* to a vial containing USP Low Molecular Weight Heparin Molecular Weight Calibrant RS. Filter using a nylon membrane of 0.45-µm pore size prior to use.

  Sample solution: 5 mg/mL of low molecular weight heparin sample in *Mobile phase*. Filter using a nylon membrane of 0.45-µm pore size.

System suitability solution: 5 mg/mL of USP Dalteparin Sodium RS in *Mobile phase*. Filter using a nylon membrane of 0.45-µm pore size.

Chromatographic system

(See *Chromatography* ⟨621⟩, *System Suitability*.)

[NOTE—The temperature of the refractive index detector must be set at the same temperature as that of the *Column temperature*.]

Mode: LC

Detector: Refractive index

Columns

Analytical: 7.8-mm × 30-cm; 5-µm packing L59 in series with a 7.8-mm × 30-cm; 5-µm packing L59[1]

Guard: 6-mm × 4-cm; 7-µm packing L59

Column temperature: 30°

Flow rate: 0.5 mL/min

Column equilibration: 0.5 mL/min for at least 2 h

Injection volume: 20 µL

System suitability

Sample: *System suitability solution*

Suitability requirements

Resolution: There is baseline resolution between the last peak of the USP Low Molecular Weight Heparin Molecular Weight Calibrant RS and the salt peak, or negative exchange peaks.

Calibration curve: The coefficient of determination of the calibration curve fitted to the Broad Standard Table values must be NLT 0.990, using a third-order polynomial equation.

Weight-average molecular weight (M_w): Take the mean of the calculated M_w from the duplicate injections of the *System suitability solution*, and round to the nearest 50 Da. The chromatographic system is suitable if the M_w of the USP Dalteparin Sodium RS is within 150 Da of the labeled value as stated in the USP Certificate for USP Dalteparin Sodium RS.

Analysis

Samples: Inject 20 µL of the *Calibration solution* (single injection), *System suitability solution* (duplicate injections), and *Sample solution* (duplicate injections), and record the chromatograms for a length of time to ensure complete elution, including salt and solvent peaks (about 50 min).

[NOTE—The calibrant, Standard, or sample of low molecular weight heparin will give a broad peak between about 25 and 45 min, followed by a later eluting narrow salt peak, as illustrated in the USP Certificate for USP Low Molecular Weight Heparin Molecular Weight Calibrant RS.]

Calculations: Calculate the total area under the low molecular weight heparin peak from the *Calibration solution* and the cumulative area at each point under the peak as a percent of the total. Do not include the salt peak. Using the Broad Standard Table provided in the USP Certificate for USP Low Molecular Weight Heparin Molecular Weight Calibrant RS, identify those points in the chromatogram for which the percent cumulative area is closest to the percent fractions listed in the Broad Standard Table, and assign the MW in this Table to the corresponding retention time (RT) in the chromatogram. For the set of retention times and molecular weights identified, fit log(MW) vs. RT to a third-order polynomial function using suitable gel permeation chromatography (GPC) software, or find values of *a*, *b*, *c*, and *d* such that $\log MW = a + (b \times RT) + [c \times (RT)^2] + [d \times (RT)^3]$.

Using the same GPC software, for each of the duplicate chromatograms of the *System suitability solution and the Sample solution*, with the calibration function derived as described above, calculate M_w:

$$M_w = \Sigma(RI_i \times M_i)/\Sigma RI_i$$

RI_i = detector response at each point

M_i = MW at each point

Round the mean value of M_w to the nearest 50 Da. Using the same GPC software, determine for each of the duplicate *Sample solution* chromatograms the percentage of product with molecular weight as indicated in the product monograph.

Acceptance criteria: As indicated in the product monograph

ADDITIONAL REQUIREMENTS

- **USP REFERENCE STANDARDS ⟨11⟩**

USP Dalteparin Sodium RS

USP Low Molecular Weight Heparin Molecular Weight Calibrant RS

[1] The method was validated using a guard column TSK SWXL 6-mm × 4-mm; 7-µm in series with two analytical columns: TSK G3000 SWXL 7.8-mm × 30-cm; 5-µm in series with a TSK G2000 SWXL 7.8-mm × 30-cm; 5-µm.

〈211〉 ARSENIC

This procedure is designed to determine the presence of trace amounts of arsenic (As) by converting the arsenic in a substance under test to arsine, which is then passed through a solution of silver diethyldithiocarbamate to form a red complex. The red color so produced is compared, either visually or spectrophotometrically, to the color produced similarly in a control containing an amount of arsenic equivalent to the limit given in the individual monograph. Limits are stated in terms of arsenic (As). The content of arsenic does not exceed the limit given in the individual monograph.

Two methods are provided, the methods differing only in the preliminary treatment of the test substance and the standard. Generally, *Method I* is used for inorganic materials, while *Method II* is used for organic materials.

PROCEDURES

Apparatus

The apparatus (see *illustration*) consists of an arsine generator (*a*) fitted with a scrubber unit (*c*) and an absorber tube (*e*) with standard-taper or ground glass ball-and-socket joints (*b* and *d*) between the units. However, any other suitable apparatus, embodying the principle of the assembly described and illustrated, may be used.

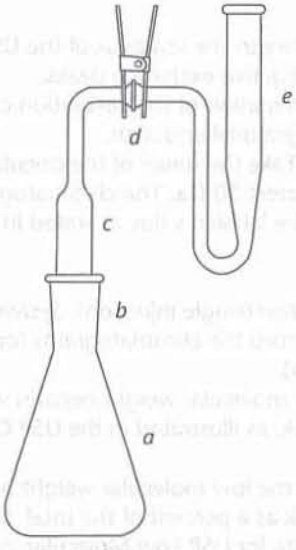

Arsenic Test Apparatus

Arsenic Trioxide Stock Solution: Dissolve 132.0 mg of arsenic trioxide, previously dried at 105° for 1 hour and accurately weighed, in 5 mL of sodium hydroxide solution (1 in 5) in a 1000-mL volumetric flask. Neutralize the solution with 2 N sulfuric acid, add 10 mL more of 2 N sulfuric acid, then add recently boiled and cooled water to volume, and mix.

Standard Arsenic Solution: Transfer 10.0 mL of *Arsenic Trioxide Stock Solution* to a 1000-mL volumetric flask, add 10 mL of 2 N sulfuric acid, then add recently boiled and cooled water to volume, and mix. Each mL of *Standard Arsenic Solution* contains the equivalent of 1 µg of arsenic (As). Keep this solution in an all-glass container, and use within 3 days.

Method I

Standard Preparation: Pipet 3.0 mL of *Standard Arsenic Solution* into a generator flask, and dilute with water to 35 mL.

Test Preparation: Unless otherwise directed in the individual monograph, transfer to the generator flask the quantity, in g, of the test substance calculated by the formula:

$$3.0/L$$

L = limit of arsenic (ppm)

Dissolve in water and dilute with water to 35 mL.

Procedure: Treat the *Standard Preparation* and the *Test Preparation* similarly as follows. Add 20 mL of 7 N sulfuric acid, 2 mL of potassium iodide TS, 0.5 mL of stronger acid stannous chloride TS, and 1 mL of isopropyl alcohol, and mix. Allow to stand at room temperature for 30 minutes. Pack the scrubber tube (*c*) with two pledgets of cotton that have been soaked in saturated lead acetate solution, freed from excess solution by expression, and dried in vacuum at room temperature, leaving a 2-mm space between the two pledgets. Lubricate the joints (*b* and *d*) with a suitable stopcock grease designed for use with organic solvents, and connect the scrubber unit to the absorber tube (*e*). Transfer 3.0 mL of silver diethyldithiocarbamate TS to the absorber tube. Add 3.0 g of granular zinc (No. 20 mesh) to the mixture in the flask, immediately connect the assembled scrubber unit, and allow the evolution of hydrogen and the color development to proceed at room temperature for 45 minutes, swirling the flask gently at 10-minute intervals. Disconnect the absorber tube from the generator and scrubber units, and transfer the absorbing solution to a 1-cm absorption cell. Any red color produced by the *Test*

Preparation does not exceed that produced by the *Standard Preparation*. If necessary or desirable, determine the absorbance at the wavelength of maximum absorbance between 535 and 540 nm, with a suitable spectrophotometer or colorimeter, using silver diethyldithiocarbamate TS as the blank.

Interfering Chemicals: Metals or salts of metals, such as chromium, cobalt, copper, mercury, molybdenum, nickel, palladium, and silver, may interfere with the evolution of arsine. Antimony, which forms stibine, produces a positive interference in the color development with silver diethyldithiocarbamate TS; when the presence of antimony is suspected, the red colors produced in the two silver diethyldithiocarbamate solutions may be compared at the wavelength of maximum absorbance between 535 and 540 nm, with a suitable colorimeter, since at this wavelength the interference due to stibine is negligible.

Method II

[NOTES—]

(1) *Caution—Some substances may react with explosive violence when digested with hydrogen peroxide. Exercise safety precautions at all times.*

(2) If halogen-containing compounds are present, use a lower temperature while heating the test specimen with sulfuric acid, avoid boiling the mixture, and add the hydrogen peroxide with caution, before charring begins, to prevent loss of trivalent arsenic.

(3) If the test substance reacts too rapidly and begins charring with 5 mL of sulfuric acid before heating, use instead 10 mL of cooled dilute sulfuric acid (1 in 2), and add a few drops of the hydrogen peroxide before heating.

Standard Preparation: Pipet 3.0 mL of *Standard Arsenic Solution* into a generator flask, add 2 mL of sulfuric acid, mix, and add the total amount of 30 percent hydrogen peroxide used in preparing the *Test Preparation*. Heat the mixture to strong fuming, cool, add cautiously 10 mL of water, and again heat to strong fumes. Repeat this procedure with another 10 mL of water to remove any traces of hydrogen peroxide. Cool, and dilute with water to 35 mL.

Test Preparation: Unless otherwise directed in the individual monograph, transfer to a generator flask the quantity, in g, of the test substance calculated by the formula:

$$3.0/L$$

L = limit of arsenic (ppm)

Add 5 mL of sulfuric acid and a few glass beads, and digest in a fume hood, preferably on a hot plate and at a temperature not exceeding 120°, until charring begins. (Additional sulfuric acid may be necessary to wet some specimens completely, but the total volume added should not exceed 10 mL.) Cautiously add, dropwise, 30 percent hydrogen peroxide, allowing the reaction to subside and again heating between drops. Add the first few drops very slowly with sufficient mixing, in order to prevent a rapid reaction. Discontinue heating if foaming becomes excessive. When the reaction has abated, heat cautiously, rotating the flask occasionally to prevent the specimen from caking on glass exposed to the heating unit. *Maintain oxidizing conditions at all times during the digestion by adding small quantities of the hydrogen peroxide solution whenever the mixture turns brown or darkens.* Continue the digestion until the organic matter is destroyed, gradually raising the temperature of the hot plate until fumes of sulfur trioxide are copiously evolved, and the solution becomes colorless or retains only a light straw color. Cool, add cautiously 10 mL of water, mix, and again evaporate to strong fuming, repeating this procedure to remove any trace of hydrogen peroxide. Cool, add cautiously 10 mL of water, wash the sides of the flask with a few mL of water, and dilute with water to 35 mL.

Procedure: Proceed as directed for *Procedure* under *Method I*.

Interfering Chemicals: See *Interfering Chemicals* under *Method I*.

〈212〉 OLIGOSACCHARIDE ANALYSIS

INTRODUCTION

Analysis of the asparagine (Asn-) linked oligosaccharide (also known as the *N*-linked oligosaccharide or *N*-glycan) composition of selected recombinant therapeutic proteins has become necessary for product characterization or release specifications of these proteins. For information on the characterization and assessment of protein glycosylation, see *Glycoprotein and Glycan Analysis—General Considerations* 〈1084〉. Chapter 〈1084〉 covers general analytical strategies and also highlights criteria for selecting appropriate methods for specific analytical challenges, thereby providing the context for this chapter. This chapter focuses on the analysis of *N*-linked oligosaccharides that are released from glycosylated recombinant therapeutic proteins. Therefore, the chapter provides 1) a generic procedure for enzymatic release of *N*-glycans using peptide *N*-glycosidase F (PNGase F), 2) two different approaches for fluorophore labeling of the released *N*-linked oligosaccharides, and 3) five analytical procedures based on chromatographic and electrophoretic separation, as well as performance criteria for the separation. Alternative analytical strategies are discussed in 〈1084〉. Although the procedures in this chapter are validated, the procedures must be verified with the individual specific product (see *Verification of Compendial Procedures* 〈1226〉). Furthermore, validation is required when the procedure is optimized for a specific product [e.g., outside the allowed parameter limits defined in *Chromatography* 〈621〉, *System Suitability* (see *Validation of Compendial Procedures* 〈1225〉)]. Data analysis, quantita-

tion, and lot release specifications, which are expected to be product specific, will be found in individual product monographs; therefore, these aspects are not covered in this chapter.

Labeling oligosaccharides with a fluorophore before analysis provides an important advantage of enhanced detection of oligosaccharides during separation, because oligosaccharides have no or low absorptivity of either ultraviolet (UV) or visible light and no significant fluorophore groups. This chapter describes two different methods for fluorophore labeling of oligosaccharides: derivatization of oligosaccharides using 2-aminobenzamide (2-AB) for liquid chromatographic separation, and labeling of oligosaccharides with 8-aminopyrene-1,3,6-trisulfonic acid (APTS) for capillary electrophoresis (CE) separation. Although electrochemical detection (pulsed amperometric detection or pulsed electrochemical detection) is also used in oligosaccharide analysis by using a strong base elution, the electrochemical detection method is less sensitive and has a higher noise-to-signal ratio. Therefore, this detection method is not addressed in this chapter.

Many different chromatography and electrophoresis methods have been developed to analyze oligosaccharides, and the procedures described in this chapter have been used successfully for this purpose. The choice of procedures discussed is meant to reflect the most commonly and broadly used approaches for supporting current recombinant glycosylated biological medicines in commerce. These analytical procedures include normal phase or hydrophilic interaction liquid chromatography (HILIC), high-performance anion exchange liquid chromatography (HPAEC), and CE. Several other chromatographic modes that separate oligosaccharides by size, shape, and polarity are also commonly used for oligosaccharide separation, but those other chromatographic modes are not discussed in this chapter. The general principles of chromatography are covered in 〈621〉, and therefore 〈621〉 should be considered within that context.

USP Reference Standards (RS) have been developed to assess system suitability for these analytical procedures:

- USP Oligosaccharide System Suitability Mixture A RS consists of a mixture of partially sialylated, partially galactosylated, and partially fucosylated biantennary *N*-linked oligosaccharides that were released from human polyclonal immunoglobulin G (IgG) by PNGase F.
- USP Oligosaccharide System Suitability Mixture B RS consists of a mixture of high-mannose *N*-linked oligosaccharides with traces of hybrid chains that were released from bovine ribonuclease B (RNase B) by PNGase F.
- USP Oligosaccharide System Suitability Mixture C RS is a mixture of bi-, tri-, and tetra-antennary *N*-linked oligosaccharides with variable sialylation with or without fucose (Fuc; also containing Le^x-type structures); the mixture was released from human α1 acid-glycoprotein by PNGase F.
- USP Oligosaccharide System Suitability Mixture D RS is a mixture of sialylated bi- and tri-antennary complex type structures with an additional sialic acid on one of the tri-antennary structures; the mixture was released from bovine fetuin by PNGase F.

ANALYTICAL PROCEDURES OVERVIEW

Table 1 outlines the applications and separation principles of the analytical procedures included in this chapter. The choice of the appropriate RS will depend on the expected glycan content of the product being analyzed.

Table 1

Analytical Procedures	Type of *N*-linked Oligosaccharides to Be Separated	Applicable USP Reference Standards
Normal phase liquid chromatography/HILIC procedure 1: • Column: 2.0-mm × 15-cm; 3-µm packing L68 • More oligosaccharide peaks compared to *HILIC procedure 2* • Longer mobile phase with shallow gradient compared to *HILIC procedure 2* • Enhanced sensitivity for smaller sample size	Relatively simple biantennary chains with no or low levels of sialylated structures, after 2-AB labeling	USP Oligosaccharide System Suitability Mixture A RS
	High-mannose chains, after 2-AB labeling	USP Oligosaccharide System Suitability Mixture B RS
Normal phase liquid chromatography/HILIC procedure 2: • Column: 4.6-mm × 25-cm; 5-µm packing L68 • Fewer oligosaccharide peaks observed compared to *HILIC procedure 1* • Shorter mobile phase with less shallow gradient compared to *HILIC procedure 1*	Relatively simple biantennary chains with no or low levels of sialylated structures, after 2-AB labeling	USP Oligosaccharide System Suitability Mixture A RS
	High-mannose chains, after 2-AB labeling	USP Oligosaccharide System Suitability Mixture B RS

General Chapters

Table 1 *(Continued)*

Analytical Procedures	Type of *N*-linked Oligosaccharides to Be Separated	Applicable USP Reference Standards
HPAEC procedure 1 • Guard column: 4.0-mm × 5-cm; 10-µm packing L46 • Column: 4.0-mm × 25-cm; 10-µm packing L46 • Mobile phase: 0–75 mM sodium acetate in isocratic 0.15 N sodium hydroxide • Selectivity is different from *HILIC procedures 1* and *2* with respect to the size and composition of oligosaccharide	Relatively simple biantennary chains with no or low levels of sialylated structures, after 2-AB labeling	USP Oligosaccharide System Suitability Mixture A RS
	High-mannose chains, after 2-AB labeling	USP Oligosaccharide System Suitability Mixture B RS
HPAEC procedure 2 • Guard column: 4.0-mm × 5-cm; 10-µm packing L46 • Column: 4.0-mm × 25-cm; 10-µm packing L46 • Mobile phase: 150–450 mM sodium acetate in isocratic 0.15 N sodium hydroxide • Suitable for separation of charged *N*-linked oligosaccharides	Bi-, tri-, and tetra-antennary *N*-linked oligosaccharides with variable sialylation, after 2-AB labeling	USP Oligosaccharide System Suitability Mixture C RS
	Sialylated bi- and tri-antennary complex type structures with an additional sialic acid on one of the tri-antennary structure, after 2-AB labeling	USP Oligosaccharide System Suitability Mixture D RS
Capillary electrophoresis • Appropriate for APTS-oligosaccharides • Capillary: 50-µm inner diameter with 50 cm of total length and 40 cm of separation length	Relatively simple biantennary chains with no or low levels of sialylated structures, after APTS labeling	USP Oligosaccharide System Suitability Mixture A RS
	High-mannose chains, after APTS labeling	USP Oligosaccharide System Suitability Mixture B RS

SAMPLE PREPARATION

See *Appendix* (*Table 17*) for abbreviations and structures of glycans. The sample preparation is for all of the procedures that follow.

Ideally, the samples should be free of salts, excipients, and other carrier materials that may interfere with the analysis. This can be achieved by either 1) dialysis against water, a suitable buffer, or a volatile buffer using an appropriate membrane, 2) sample trapping on a solid-phase extraction (SPE) cartridge followed by washing away of salts and excipients and elution of the required sample, or 3) ultrafiltration using an appropriate membrane.

[NOTE—In addition to RS, a control sample with a known glycan profile should be included in the overall procedure to confirm correct performance of the analysis. A reaction blank control only containing the buffer matrix of the glycoprotein sample can also be included in the overall procedure.]

• ENZYMATIC RELEASE OF *N*-GLYCANS

[NOTE—The following is a generic method that should be optimized for individual products depending on the amount of glycoprotein to be digested and the glycan structures, especially on the basis of the protein-to-glycan ratio in the molecule and the accessibility of the sugars.]

Procedure 1 for chromatographic separation

Enzyme reaction buffer: 50 mM sodium phosphate pH 7.5 or 15 mM tris(hydroxymethyl)-aminomethane, and adjust with hydrochloric acid to a pH of 7.0.

Digestion with PNGase F: Transfer 0.1–2.25 mg of glycoprotein to a vial, and adjust with *Enzyme reaction buffer* to a final volume of 30–100 µL. Add PNGase F to the glycoprotein sample in a ratio of 0.5–15 units of PNGase F to 0.1 mg of glycoprotein. Incubate at 37° for 12–24 h. Cool at room temperature for about 5 min. Vortex gently and centrifuge briefly. [NOTE—One unit of PNGase F is defined as the amount of enzyme required to catalyze the release of *N*-linked oligosaccharides from 1.0 nmol of denatured ribonuclease B per min at a pH of 7.5 at 37°, and is equal to 1 IUB milliunit. Complete digestion by PNGase F can be assessed by observing a mobility shift of the deglycosylated proteins on sodium dodecyl sulfate-polyacrylamide gel electrophoresis (SDS-PAGE), followed by Coomassie Blue staining or on SDS-capillary gel electrophoresis (SDS-CGE), as shown by reduction in mass of approximately 2 kDa per glycan chain cleaved.]

Two methods are described below for performing the separation of released glycans from glycoprotein.

Method 1, using an ultrafiltration membrane with a molecular weight cutoff of 30 kDa:[1, 2] [NOTE—Ultrafiltration membranes with a lower molecular weight cutoff may be used for proteins < 150 kDa.] Remove trace amounts of glycerin by centrifuging at 11,000 × *g* and rinsing the membrane with 0.5 mL of water. Discard the permeate. Add 0.1 mL of water into the sample reservoir and then add the digested glycoprotein sample to the reservoir. Rinse the reaction vial

[1] A suitable ultrafiltration membrane is YM-30 microcon centrifugal filter device from Millipore (catalog numbers 42422, 42409, and 42410) or an equivalent.

[2] A suitable ultrafiltration membrane is EMD Millipore Ultra-0.5 Centrifugal Filter Unit (catalog number UFC501096) or an equivalent.

with 0.1 mL of water and add to the sample reservoir. Centrifuge at 11,000 × *g* and collect the permeate. Rinse the sample reservoir twice using 0.1 mL of water for each wash and collect the permeate. Combine the permeates (approximately 0.5 mL) and bring the samples to complete dryness using a centrifugal evaporator without heat.

Method 2, using a reversed-phase SPE cartridge:[3] Add 2.0 mL of methanol into a syringe, attach the syringe to the cartridge, and use the syringe plunger to pass methanol through to waste. Add into a syringe 6.0 mL of 5% (v/v) acetic acid prepared in water. Attach the syringe to the cartridge and use the syringe plunger to pass the acetic acid solution through to waste. Gently apply the digested sample onto an individual cartridge. Into a 1-mL syringe add 0.5 mL of 5% (v/v) acetic acid, attach the syringe to the cartridge, and use the syringe plunger to pass the acetic acid through to waste. To a 2- to 3-mL syringe add 1.5 mL of 5% (v/v) acetic acid. Attach the syringe to the cartridge, and use the syringe plunger to pass the acetic acid solution through, collecting the eluting solution into a 1.5-mL tube. Bring the samples to complete dryness using a centrifugal evaporator without heat.

Procedure 2 for capillary electrophoresis separation

Enzyme reaction buffer: 50 mM sodium phosphate, pH 7.5

Digestion with PNGase F: Add 2 µL of PNGase F (5 units/µL) to 50 µg of glycoprotein sample, and adjust with *Enzyme reaction buffer* to a final volume of 50 µL. Incubate at 37° for 18 h. Separate released oligosaccharides by centrifugation using a centrifugal filter with a 10,000 molecular weight cut-off.[2] In a centrifugal vacuum evaporator, dry the released oligosaccharides to dryness.

[NOTE—Follow the guidelines listed in *Table 1* to select the appropriate USP RS and label.]

• **2-AB LABELING[4] FOR LIQUID CHROMATOGRAPHIC SEPARATION**

Solution A: Mix glacial acetic acid and dimethyl sulfoxide (3:7, v/v).

Solution B: Add 1.5 mL of *Solution A* to 75 mg of 2-AB. Mix well by gentle vortexing to completely dissolve 2-AB.

Labeling solution: Add 1 mL of *Solution B* to 63 mg of sodium cyanoborohydride. Mix well by gentle vortexing. Cap the mixture tightly and incubate at 70° for 1–2 min for complete dissolution. Cool at room temperature for 10 min. Use this *Labeling solution* within 1 h of its preparation, and protect the solution from light.

2-AB labeled standard solution: Add 5–15 µL of *Labeling solution* to 1 vial of USP Oligosaccharide System Suitability Mixture A RS, USP Oligosaccharide System Suitability Mixture B RS, USP Oligosaccharide System Suitability Mixture C RS, or USP Oligosaccharide System Suitability Mixture D RS, and mix well.

2-AB labeled sample solution: Add 5–15 µL of *Labeling solution* to the dried glycan sample after enzymatic release and separation steps, and mix well.

Procedure: Immediately incubate the *2-AB labeled standard solution* and the *2-AB labeled sample solution* at 37° for 16–18 h or at 65° for 2 h. Allow to cool at room temperature for 10 min. Centrifuge briefly.

Dried 2-AB labeled standard or Dried 2-AB labeled sample: Two methods for the removal of free 2-AB are described below.

Method 1, using a gel filtration spin column: Prepare suitable G-10 microcentrifuge spin columns[5] by tapping the column gently to ensure that the dry resin is settled at the bottom. Remove the caps, and place the column in a 2-mL collection tube. Add 0.5 mL of water to the resin, and let it swell for at least 15 min. A longer swelling time (up to 24 h) is acceptable if maintained at 2°–8°. Centrifuge the column at maximum speed for 5–10 s. Remove the water from the collection tube. Wash the resin by adding 0.5 mL of water, and centrifuge the column. Repeat the washing step one more time. After removing the water from the final wash step, spin at maximum speed for 10 s to remove residual water from the resin. Residual water is sufficiently removed if the resin appears white. Place the column in a new, labeled collection tube. Add 100 µL of water to the *2-AB labeled standard solution* and the *2-AB labeled sample solution,* and then apply the entire solution to the center of each washed G-10 column, respectively. Place the G-10 columns in the microcentrifuge and spin at approximately 200 × *g* for 1 min. Apply the flow-through (approximately 90–120 µL) to the center of the second unused but previously washed G-10 column and spin at approximately 200 × *g* for 1 min. Transfer the repeat flow-through (approximately 60–100 µL) to a 0.5-mL microcentrifuge tube. Dry the eluates by centrifugal evaporation with no heat.

Method 2, using an SPE cartridge: Prepare suitable SPE cartridges[6] by washing with 1.0 mL of water, followed by 5 × 1.0 mL of 30% (v/v) acetic acid, and then 1.0 mL of acetonitrile. Apply the *2-AB labeled standard solution* and the *2-AB labeled sample solution* to the center surface of the cartridge discs, and allow the solution to incubate on the disc for 15–20 min. Wash each disc with 1 mL of acetonitrile, followed by 6 × 1.0 mL of 96% (v/v) acetonitrile, allowing each aliquot to drain before the next is applied. Elute the *2-AB labeled standard solution* and the *2-AB labeled sample solution* with 3 × 0.5 mL of water, allowing each aliquot to drain before the next is applied. Dry the eluates by centrifugal evaporation with no heat. [NOTE—Very small hydrophobic glycans may be lost during this procedure. During method verification, it should be confirmed that no oligosaccharide species are lost during the 2-AB removal step by comparing the chromatographic profiles of an unextracted reaction blank, an unextracted sample, and an extracted sample.]

---

[3] A suitable SPE cartridge is Glyko GlycoClean R Cartridge from Prozyme (catalog number GKI-4756) or an equivalent.

[4] A SUITABLE 2-AB LABELING KIT IS GLYKO SIGNAL 2-AB LABELING KIT FROM PROZYME (CATALOG NUMBER GKK-404), LUDGERTAGE 2-AB LABELING KIT FROM QA BIO (CATALOG NUMBER LT-KAB-A2), OR AN EQUIVALENT.

[5] A suitable prepacked Sephadex G-10 column is Macro Spin G-10 mini SEC column from Harvard Apparatus (catalog number 743900) or The Nest Group (catalog number SMM S010), or an equivalent.

[6] A suitable cartridge to remove free 2-AB is Glyko GlycoClean S Cartridge from Prozyme (catalog number GKI-4726) or an equivalent.

• **APTS Labeling for Capillary Electrophoresis Separation**

APTS labeling reagent: Dissolve 5 mg of trisodium APTS in 48 μL of 15% (v/v) acetic acid.

1 M sodium cyanoborohydride: 1 M sodium cyanoborohydride in tetrahydrofuran

Run buffer: Dissolve 1.492 g of triethanolamine (TEA) and 10 g of glycerol, accurately weighed, in 80 mL of water. Adjust with 1 N hydrochloric acid to a pH of 7.5, and dilute with water to a final volume of 100 mL.

Sample buffer: Dilute 1.0 mL of *Run buffer* with 9.0 mL of water.

APTS-labeled standard solution: Add 2 μL of the *APTS labeling reagent* and 2 μL of *1 M sodium cyanoborohydride* to a vial of USP Oligosaccharide System Suitability Mixture A RS or USP Oligosaccharide System Suitability Mixture B RS. Incubate at 55° for 90 min. Add 46 μL of water to quench the reaction and mix. Transfer 5 μL of the APTS-labeled USP RS to 1.995 mL of *Sample buffer* before separation. [Note—The volume of *Sample buffer* may need to be adjusted so that the fluorescence signals of the oligosaccharides are similar to those from the *APTS-labeled sample solution*.]

APTS-labeled sample solution: Add 2 μL of *APTS labeling reagent* and 2 μL of *1 M sodium cyanoborohydride* to the dried glycan sample after enzymatic release and separation steps. Incubate at 55° for 90 min. Add 46 μL of water to quench the reaction and mix. Transfer 5 μL of the APTS-labeled glycan solution to 95 μL of *Sample buffer* before separation.

[Note—Follow the guidelines listed in *Table 1* to select the appropriate USP RS and label.]

SEPARATION AND IDENTIFICATION OF OLIGOSACCHARIDES

• **Normal Phase Chromatography/HILIC**

Procedure 1

1.4 M formic acid solution: Mix 273 mL of water with 15 mL of 98%–100% formic acid.

1.4 M ammonia solution: Mix 155 mL of water with 40 mL of 26% ammonia solution.

Ammonium formate buffer: Add *1.4 M ammonia solution* to *1.4 M formic acid solution*.

Solution A: Acetonitrile, *Ammonium formate buffer*, and water (75: 4.3: 20.7)

Solution B: Acetonitrile, *Ammonium formate buffer*, and water (54: 8.3: 37.7)

Mobile phase: See *Table 2*.

Table 2

Time (min)	Solution A (%)	Solution B (%)
0.0	79	21
80.0	47	53
81.0	0	100
92.0	0	100
93.0	79	21
113.0	79	21

Standard solution: Reconstitute the *Dried 2-AB labeled standard* with NMT 500 μL of water. [Note—The volume of water may need to be adjusted so that the fluorescence signals from the *Standard solution* are similar to those from the *Sample solution*.]

Sample solution: Reconstitute the *Dried 2-AB labeled sample* with an appropriate volume of water. [Note—Use a ratio of 30 μL of water per 100 μg of glycoprotein used in the *Enzymatic Release of N-Glycans* test as a starting point.]

Blank solution: Buffer matrix of glycoprotein sample carried through the *Sample Preparation* procedure

Chromatographic system

(See *Chromatography* 〈621〉, *System Suitability*.)

Mode: LC

Detector: Fluorescence (250-nm excitation wavelength and 428-nm emission wavelength)

Column: 2.0-mm × 15-cm; 3-μm packing L68

Temperatures

Column: 45°

Autosampler: 2°–8°

Flow rate: 0.2 mL/min

Injection volume: 2 μL

System suitability

Samples: *Standard solution* and *Blank solution*

Suitability requirements

Blank: No peak in the chromatogram of the *Blank solution* within the retention time window at 5–113 min

Chromatogram similarity: The chromatogram obtained from the *Standard solution* corresponds to that of the reference chromatogram provided with the Certificate for either USP Oligosaccharide System Suitability Mixture A RS or USP Oligosaccharide System Suitability Mixture B RS.

Presence of *N*-glycan species: If USP Oligosaccharide System Suitability Mixture A RS is used, identify peaks corresponding to *G0, G0F, G1Fa, G1Fb, G2F, A1F,* and *A2F* (see *Table 3*; see also *Appendix*) in the chromatogram obtained from the *Standard solution* by comparing the reference chromatogram provided with the USP Certificate for USP Oli-

General Chapters

gosaccharide System Suitability Mixture A RS. If USP Oligosaccharide System Suitability Mixture B RS is used, identify peaks corresponding to oligomannose (MAN) *MAN-5, MAN-6, MAN-7, MAN-8,* and *MAN-9* (see *Table 4;* see also *Appendix*) in the chromatogram obtained from the *Standard solution* by comparing the reference chromatogram provided with the USP Certificate for USP Oligosaccharide System Suitability Mixture B RS.

Relative retention times: Corresponding to the relative retention times of *N*-glycans listed in *Table 3* or *Table 4*

Table 3. Standard Solution Using USP Oligosaccharide System Suitability Mixture A RS

N-Glycan	Approximate Relative Retention Time
G0 (NGA2)	0.47
G0F (NGA2F)	0.57
G1Fa (NA1F, FA2G1, or NA2G1F)	0.75
G1Fb (NA1F, FA2G1, or NA2G1F)	0.78
G2F (NA2F)	1.00
A1F (G2fS1)	1.39
A2F (G2fS2)	1.76

Table 4. Standard Solution Using USP Oligosaccharide System Suitability Mixture B RS

N-Glycan	Approximate Relative Retention Time
MAN-5	0.74
MAN-6	1.00
MAN-7	1.29
MAN-8	1.60
MAN-9	1.85

Analysis: Equilibrate the *Chromatographic system* for at least 1 h with starting conditions described in *Table 2*. Inject the *Blank solution* until the baseline is stable (1–3 injections).

Sample: *Sample solution*

Integrate peaks in the resulting chromatogram, and report the relative peak areas of glycan structures relevant to the product. A baseline is drawn from the first to the last peak. For general information on chromatographic peak integration, see ⟨621⟩.

Procedure 2

Solution A: 250 mM ammonium formate, pH 4.0, prepared as follows. Mix 500 mL of water with 9.8 mL of 96% formic acid. Adjust with 30% ammonium hydroxide to a pH of 4.0 ± 0.1. Dilute with water to a final volume of 1000 mL. Pass the solution through a 0.22-µm pore size filter composed of cellulose acetate membrane.

Solution B: Acetonitrile

Mobile phase: See *Table 5*.

Table 5

Time (min)	Solution A (%)	Solution B (%)
0.0	20	80
2.0	30	70
67.0	52	48
67.1	80	20
73.0	80	20
73.1	20	80
85.0	20	80

Standard solution: Reconstitute the *Dried 2-AB labeled standard* with NLT 500 µL of water. [NOTE—The volume of water may need to be adjusted so that the fluorescence signals from the *Standard solution* are similar to those from the *Sample solution.*]

Sample solution: Reconstitute the *Dried 2-AB labeled sample* with an appropriate volume of water. [NOTE—Use a ratio of 50 µL of water per 100 µg of glycoprotein used in the *Enzymatic Release of N-Glycans* test as a starting point.]

Blank solution: Buffer matrix of glycoprotein sample carried through the *Sample Preparation* procedure

Chromatographic system

(See *Chromatography* ⟨621⟩, *System Suitability*.)

Mode: LC

Detector: Fluorescence; set the excitation and emission wavelengths as listed in *Table 6*.

Table 6

Time (min)	Excitation (nm)	Emission (nm)
0.00	330	420
1.00	330	420
1.01	400	500
10.00	400	500
10.01	330	420
85.00	330	420

Column: 4.6-mm × 25-cm; 5-µm packing L68
Temperatures
Column: 35°
Autosampler: 2°–8°
Flow rate: 0.4 mL/min
Injection volume: 10 µL

System suitability
Sample: *Standard solution*
Suitability requirements
Chromatogram similarity: The chromatogram obtained from the *Standard solution* corresponds to that of the reference chromatogram provided with the Certificate for either USP Oligosaccharide System Suitability Mixture A RS or USP Oligosaccharide System Suitability Mixture B RS.
Presence of *N*-glycan species: If USP Oligosaccharide System Suitability Mixture A RS is used, identify peaks corresponding to *G0, G0F, G1Fa, G1Fb, G2, G2F, A1F,* and *A2F* (see *Table 7;* see also *Appendix*) in the chromatogram obtained from the *Standard solution* by comparing the reference chromatogram provided with the USP Certificate for USP Oligosaccharide System Suitability Mixture A RS. If USP Oligosaccharide System Suitability Mixture B RS is used, identify peaks corresponding to *MAN-5, MAN-6, MAN-7, MAN-8,* and *MAN-9* (see *Table 8;* see also *Appendix*) in the chromatogram obtained from the *Standard solution* by comparing the reference chromatogram provided with the USP Certificate for USP Oligosaccharide System Suitability Mixture B RS.
Relative retention times: Corresponding to the relative retention times of *N*-glycans listed in *Table 7* or *Table 8*

Table 7. Standard Solution Using USP Oligosaccharide System Suitability Mixture A RS

N-Glycan	Approximate Relative Retention Time
G0 (NGA2)	0.78
G0F (NGA2F)	0.83
G1Fa (NA1F, FA2G1, or NA2G1F)	0.91
G1Fb (NA1F, FA2G1, or NA2G1F)	0.92
G2 (NA2)	0.96
G2F (NA2F)	1.00
A1F (G2fS1)	1.11
A2F (G2fS2)	1.20

Table 8. Standard Solution Using USP Oligosaccharide System Suitability Mixture B RS

N-Glycan	Approximate Relative Retention Time
MAN-5	0.77
MAN-6	0.86
MAN-7	0.93
MAN-8	1.00
MAN-9	1.05

Analysis
Sample: *Sample solution*
Integrate peaks in the resulting chromatogram and report the relative peak areas of glycan structures relevant to the product. For general information on chromatographic peak integration, see ⟨621⟩.

• **High-Performance Anion Exchange Liquid Chromatography with Fluorometric Detection**

Procedure 1
Solution A: Water; degas before use.
Solution B: 0.5 M sodium acetate, prepared as follows. Dissolve 20.5 g of anhydrous sodium acetate in 450 mL of water and mix well. Dilute with water to a final volume of 500 mL. Filter the solution through a membrane of NMT 0.45-µm pore size, and degas before use.

General Chapters

Solution C: 0.5 M sodium acetate, prepared as follows. To 972 mL of water, add 26 mL of 50% (w/w) sodium hydroxide solution. Pass the solution through an alkaline-resistant filter membrane of NMT 0.45-µm pore size, and degas before use.

Mobile phase: See *Table 9*.

Table 9

Time (min)	Solution A (%)	Solution B (%)	Solution C (%)	Elution
0.0	70	0	30	Initial condition
15.0	70	0	30	0–75 mM sodium acetate, isocratic 0.15 N sodium hydroxide
65.0	55	15	30	
66.0	0	50	50	250 mM sodium acetate, 0.25 N sodium hydroxide wash
74.0	0	50	50	
75.0	70	0	30	Re-equilibrium
90.0	70	0	30	

Standard solution: Reconstitute the *Dried 2-AB labeled standard* with NMT 500 µL of water. [NOTE—The volume of water may need to be adjusted so that the fluorescence signals from the *Standard solution* are similar to those from the *Sample solution*.]

Sample solution: Reconstitute the *Dried 2-AB labeled sample* with an appropriate volume of water. [NOTE—Use a ratio of 20 µL of water per 100 µg of glycoprotein used in the *Enzymatic Release of N-Glycans* test as a starting point.]

Blank solution: Buffer matrix of glycoprotein sample carried through the *Sample Preparation* procedure

Chromatographic system

(See *Chromatography* ⟨621⟩, *System Suitability*.)

Mode: LC

Detector: Fluorescence (330-nm excitation wavelength and 420-nm emission wavelength)

Columns

Guard: 4.0-mm × 5-cm; 10-µm packing L46

Analytical: 4.0-mm × 25-cm; 10-µm packing L46

Temperatures

Column: 25°

Autosampler: 4°

Flow rate: 0.8 mL/min

Injection volume: 50 µL

System suitability

Sample: *Standard solution*

Suitability requirements

Chromatogram similarity: The chromatogram obtained from the *Standard solution* corresponds to that of the reference chromatogram provided with the Certificate for either USP Oligosaccharide System Suitability Mixture A RS or USP Oligosaccharide System Suitability Mixture B RS.

Presence of *N*-glycan species: If USP Oligosaccharide System Suitability Mixture A RS is used, identify peaks corresponding to *G0F, G1F, G0, G2F, A1F,* and *A2F* (see *Table 10*; see also *Appendix*) in the chromatogram obtained from the *Standard solution* by comparing the reference chromatogram provided with the USP Certificate for USP Oligosaccharide System Suitability Mixture A RS. If USP Oligosaccharide System Suitability Mixture B RS is used, identify peaks corresponding to *MAN-5, MAN-6, MAN-7, MAN-8,* and *MAN-9* (see *Table 11*; see also *Appendix*) in the chromatogram obtained from the *Standard solution* by comparing the reference chromatogram provided with the USP Certificate for USP Oligosaccharide System Suitability Mixture B RS.

Relative retention times: Corresponding to the relative retention times of *N*-glycans listed in *Table 10* or *Table 11*

Table 10. Standard Solution Using USP Oligosaccharide System Suitability Mixture A RS

N-Glycan	Approximate Relative Retention Time
G0F (NGA2F)	0.67
G1F (NA1F, FA2G1, or NA2G1F)	0.86
G0 (NGA2)	0.92
G2F (NA2F)	1.00
A1F (G2fS1)	1.75
A2F (G2fS2)	2.22

Table 11. Standard Solution Using USP Oligosaccharide System Suitability Mixture B RS

N-Glycan	Approximate Relative Retention Time
MAN-5	0.86
MAN-6	1.00
MAN-7	1.09
MAN-8	1.15
MAN-9	1.24

Analysis: Equilibrate the *Chromatographic system* with the initial *Mobile phase* conditions described in *Table 9* for a minimum of 15 min. Inject 50 µL of water for the first injection.

Sample: *Sample solution*

Integrate peaks in the resulting chromatogram and report the relative peak areas of glycan structures relevant to the product. For general information on chromatographic peak integration, see ⟨621⟩.

Procedure 2

Solution A: Water; degas before use

Solution B: 0.5 M sodium acetate, prepared as follows. Dissolve 41.0 g of sodium acetate anhydrous in 900 mL of water. Transfer the solution to a 1-L volumetric flask, and bring with water to volume. Filter the solution through a nylon membrane with NMT 0.45-µm pore size, and degas before use.

Solution C: 0.5 M sodium hydroxide, prepared as follows. To 900 mL of water, add 26 mL of 50% (w/w) sodium hydroxide solution, and mix well. Bring the solution with water to the final volume of 1000 mL. Filter the solution through an alkaline-resistant nylon membrane with NMT 0.45-µm pore size, and degas before use.

Mobile phase: See *Table 12*.

Table 12

Time (min)	Solution A (%)	Solution B (%)	Solution C (%)	Elution
0.0	80	10	10	Initial condition
15.0	80	10	10	50–150 mM sodium acetate, isocratic 0.05 N sodium hydroxide
70.0	60	30	10	150–450 mM sodium acetate, isocratic 0.05 N sodium hydroxide
94.0	0	90	10	Sodium acetate wash, no gradient
99.0	0	90	10	
105	0	10	90	Sodium hydroxide wash, no gradient
110	00	10	90	
111	80	10	10	
130	80	10	10	Re-equilibrium

Standard solution: Reconstitute the *Dried 2-AB labeled standard* with NMT 500 µL of water. [NOTE—The volume of water may need to be adjusted so that the fluorescence signals from the *Standard solution* are similar to those from the *Sample solution*.]

Sample solution: Reconstitute the *Dried 2-AB labeled sample* with an appropriate volume of water. [NOTE—Use a ratio of 20 µL of water per 100 µg of glycoprotein used in the *Enzymatic Release of N-Glycans* test as a starting point.]

Blank solution: Buffer matrix of sample carried through the *Sample Preparation* procedure.

Chromatographic system

(See *Chromatography* ⟨621⟩, *System Suitability*.)

Mode: LC

Detector: Fluorescence (330-nm excitation wavelength and 420-nm emission wavelength)

Columns

Guard: 4.0-mm × 5-cm; 10-µm packing L46

Analytical: 4.0-mm × 25-cm; 10-µm packing L46

Temperatures

Column: 25°

Autosampler: 4°

Flow rate: 0.5 mL/min

Injection volume: 25 µL

System suitability

Samples: *Standard solution* and *Blank solution*

Suitability requirements

Blank: The chromatogram with *Blank solution* must not have any interfering components in the regions of *N*-glycan elution.

Chromatogram similarity: The chromatogram obtained from the *Standard solution* corresponds to that of the reference chromatogram provided with the Certificate for either USP Oligosaccharide System Suitability Mixture C RS or USP Oligosaccharide System Suitability Mixture D RS.

Presence of *N*-glycan species: If USP Oligosaccharide System Suitability Mixture C RS is used, identify peaks corresponding to *A1* (peak 1 and peak 2), *A2*, and *A3* (see *Table 13*; see also *Appendix*) in the chromatogram obtained from the *Standard solution* by comparing the reference chromatogram provided with the Certificate. If Oligosaccharide System Suitability Mixture D RS is used, identify peaks corresponding to *A1* (peak 1), *A2*, *A3*, and *A3G3S4* (see *Table 14*; see also *Appendix*) in the chromatogram obtained from the *Standard solution* by comparing the reference chromatogram provided with the Certificate.

Relative retention times: Corresponding to the relative retention times of *N*-glycans listed in *Table 13* or *Table 14*

Table 13. Standard Solution Using USP Oligosaccharide System Suitability Mixture C RS

N-Glycan	Approximate Relative Retention Time
A1 (G1S1), peak 1	0.31
A1 (G1S1), peak 2	0.32
A2 (G2S2)	0.73
A3 (G3S3)	1.00

Table 14. Standard Solution Using USP Oligosaccharide System Suitability Mixture D RS

N-Glycan	Approximate Relative Retention Time
A1 (G1S1), peak 1	0.23
A2 (G2S2)	0.57
A3 (G3S3)	0.78
A3G3S4 (S4NA3, or A3 + Sa)	1.00

Analysis: [NOTE—Equilibrate the column with initial mobile phase conditions for a minimum of 15 min.]

Sample: *Sample solution*

Inject 25 µL of water, and run the gradient program at least once to equilibrate the column and system. Integrate peaks in the resulting chromatogram, and report the relative peak areas of glycan structures relevant to the product. For general information on chromatographic peak integration, see ⟨621⟩.

• **CAPILLARY ELECTROPHORESIS**

Run buffer: Dissolve 1.492 g of TEA and 10 g of glycerol in 80 mL of water. Adjust with 1 N hydrochloric acid to a pH of 7.5 and dilute with water to a final volume of 100 mL.

Standard solution: *APTS-labeled standard solution* prepared as directed in the test for *APTS Labeling for CE Separation*

Sample solution: *APTS-labeled sample solution* prepared as directed in the test for *APTS Labeling for CE Separation*

Blank solution: Buffer matrix of glycoprotein sample carried through the *Sample Preparation* procedure

Instrumental conditions

Mode: CE

Detector: Laser-induced fluorescence (488-nm excitation wavelength and 520-nm emission wavelength)

Capillary: 50-µm inner diameter bare fused-silica with 50 cm total length and 40 cm separation length

Preconditioning of the capillary: Between each run, rinse for 5 min at 40 psi with 0.5 N sodium hydroxide, followed by water for 1 min at 40 psi. [NOTE—Precondition a new capillary or as needed: Rinse for 5 min at 20 psi with methanol, followed by water for 1 min at 50 psi, 1 N hydrochloric acid for 5 min at 20 psi, water for 1 min at 50 psi, 0.5 N sodium hydroxide for 25 min at 20 psi, and water for 5 min at 50 psi.]

Prefilling of the capillary: Rinse for 5 min at 40 psi with *Run buffer.*

Sample injection: 10 s hydrodynamic (pressure) injection

Voltage: 22 kV for 60 min

Temperatures

Capillary cartridge: 18°

Sample storage: 20°

System suitability

Sample: *Standard solution*

Suitability requirements

Electropherogram similarity: The electropherogram obtained from the *Standard solution* corresponds to that of the reference electropherogram provided with the Certificate for either USP Oligosaccharide System Suitability Mixture A RS or USP Oligosaccharide System Suitability Mixture B RS.

Presence of *N*-glycan species: If USP Oligosaccharide System Suitability Mixture A RS is used, identify peaks corresponding to *G2F*, *G2*, *G1Fa*, *G1Fb*, *G0F*, *MAN-5*, *G0*, and *A1F* (see *Table 15*; see also *Appendix*) in the electropherogram

obtained from the *Standard solution* by comparing the reference electropherogram provided with the USP Certificate for USP Oligosaccharide System Suitability Mixture A RS. If USP Oligosaccharide System Suitability Mixture B RS is used, identify peaks corresponding to *MAN-5*, *MAN-6*, *MAN-7*, *MAN-8*, and *MAN-9* (see *Table 16*; see also *Appendix*) in the electropherogram obtained from the *Standard solution* by comparing the reference electropherogram provided with the USP Certificate for USP Oligosaccharide System Suitability Mixture B RS.

Relative migration times: Corresponding to relative migration times listed in *Table 15* or *Table 16*

Table 15. Standard Solution Using USP Oligosaccharide System Suitability Mixture A RS

N-Glycan	Approximate Relative Migration Time
G2F (NA2F)	0.79
G2 (NA2)	0.84
G1Fb (NA1F, FA2G1, or NA2G1F)	0.87
G1Fa (NA1F, FA2G1, or NA2G1F)	0.90
G0F (NGA2F)	1.00
MAN-5	1.03
G0 (NGA2)	1.12
A1F (G2fS1)	1.18

Table 16. Standard Solution Using USP Oligosaccharide System Suitability Mixture B RS

N-Glycan	Approximate Relative Migration Time
MAN-9	0.82
MAN-8	0.85
MAN-7	0.91, 0.92, 0.94
MAN-6	1.00
MAN-5	1.11

Analysis

Sample: *Sample solution*

Integrate peaks in the resultant electropherogram and report the relative peak areas of glycan structures relevant to the product.

ADDITIONAL REQUIREMENTS

- **USP Reference Standards ⟨11⟩**
  - USP Oligosaccharide System Suitability Mixture A RS
  - USP Oligosaccharide System Suitability Mixture B RS
  - USP Oligosaccharide System Suitability Mixture C RS
  - USP Oligosaccharide System Suitability Mixture D RS

APPENDIX

Table 17. Glycan Descriptions

Glycan	Description
G0 (NGA2)	Asialo-, agalacto- biantennary oligosaccharide 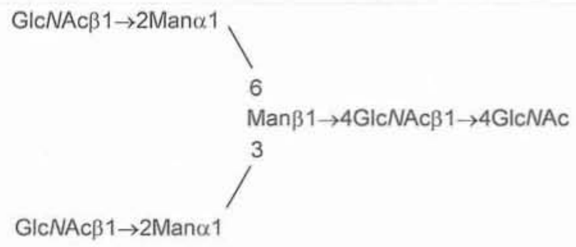

Table 17. Glycan Descriptions *(Continued)*

<table>
<tr><th>Glycan</th><th>Description</th></tr>
<tr><td>G0F (NGA2F)</td><td>Asialo-agalacto-fucosylated biantennary oligosaccharide
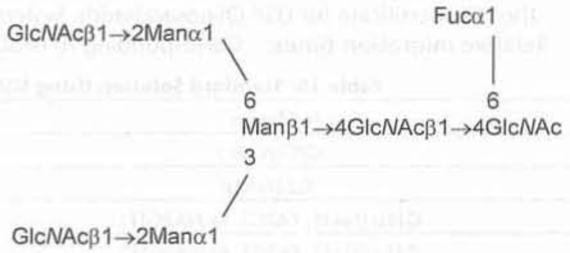
</td></tr>
<tr><td>G1Fa (NA1F, FA2G1, or NA2G1F) with the α(1,6) linkage</td><td>Asialo-, monogalactosylated, fucosylated biantennary oligosaccharide with galactosylation at the α(1,6) linkage
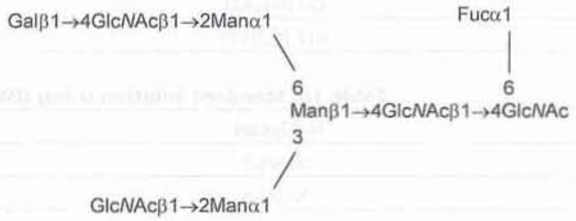
</td></tr>
<tr><td>G1Fb (NA1F, FA2G1, or NA2G1F) with the α(1,3) linkage</td><td>Asialo-, monogalactosylated, fucosylated biantennary oligosaccharide with galactosylation at the α(1,3) linkage
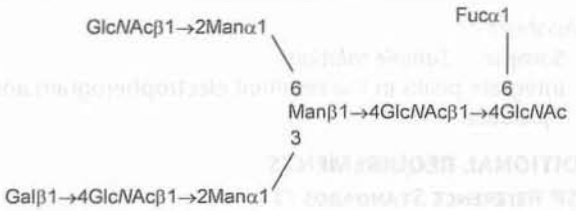
</td></tr>
<tr><td>G2 (NA2)</td><td>Asialo, galactosylated, biantennary oligosaccharide
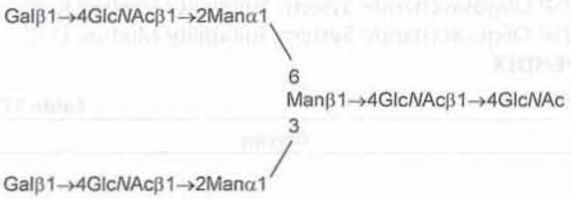
</td></tr>
<tr><td>G2F (NA2F)</td><td>Asialo-fucosylated biantennary oligosaccharide
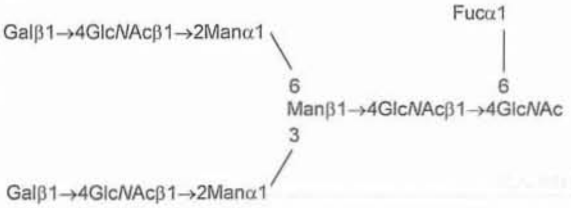
</td></tr>
<tr><td>A1F (G2fS1)</td><td>Monosialo-fucosylated biantennary oligosaccharide
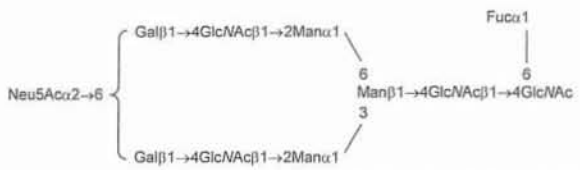
</td></tr>
</table>

General Chapters

Table 17. Glycan Descriptions *(Continued)*

Glycan	Description
A2F (G2fS2)	Disialo-fucosylated biantennary oligosaccharide Neu5Acα2→6Galβ1→4GlcNAcβ1→2Manα1 \\ Fucα1 | 6 6 Manβ1→4GlcNAcβ1→4GlcNAc 3 Neu5Acα2→6Galβ1→4GlcNAcβ1→2Manα1 /
MAN-5	Oligomannose 5 Oligomannose *N*-linked oligosaccharide with 5 mannosyl residues Manα1 \\ 6 Manα1→6Manβ1→4GlcNAcβ1→4GlcNAc 3 3 Manα1 / Manα1 |
MAN-6	Oligomannose 6 Oligomannose *N*-linked oligosaccharide with 6 mannosyl residues Manα1 \\ 6 Manα1 3 \\ Manα1 / 6 Manβ1→4GlcNAcβ1→4GlcNAc 3 Manα1→2Manα1 /
MAN-7	Oligomannose 7 Oligomannose *N*-linked oligosaccharide with 7 mannosyl residues Manα1 \\ 6 Manα1 Manα1→2 { 3 \\ Manα1 / 6 Manβ1→4GlcNAcβ1→4GlcNAc 3 Manα1→2Manα1 /

Table 17. Glycan Descriptions *(Continued)*

Glycan	Description
MAN-8	Oligomannose 8 Oligomannose *N*-linked oligosaccharide with 8 mannosyl residues 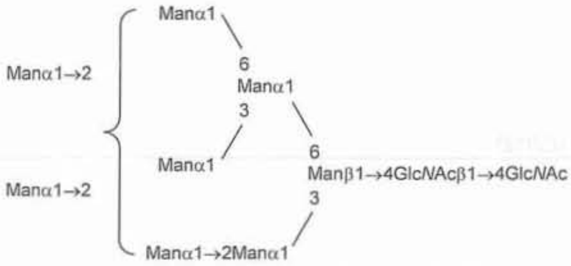
MAN-9	Oligomannose 9 Oligomannose *N*-linked oligosaccharide with 9 mannosyl residues 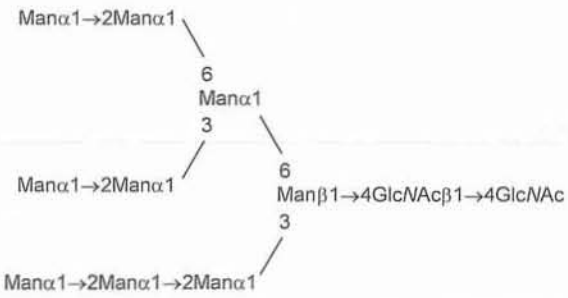
A1 (G1S1)	Mono-sialylated, galactosylated, biantennary oligosaccharide 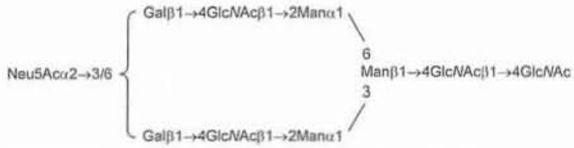
A2 (G2S2)	Di-sialylated, galactosylated, biantennary oligosaccharide 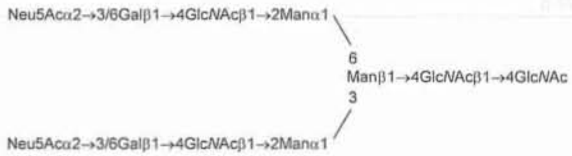
A3 (G3S3)	Tri-sialylated, galactosylated, triantennary oligosaccharide 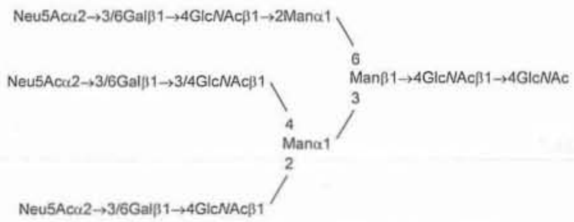

Table 17. Glycan Descriptions *(Continued)*

Glycan	Description
A3G3S4 (S4NA3, or A3 + Sa)	Tetra-sialylated, galactosylated, triantennary oligosaccharide 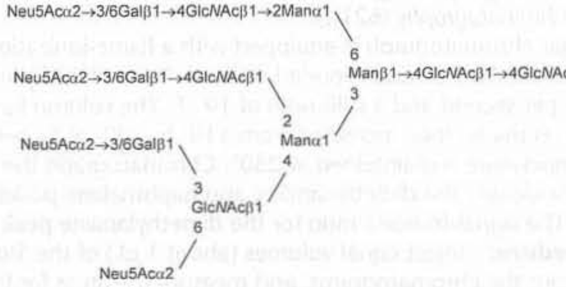

⟨221⟩ CHLORIDE AND SULFATE

The following limit tests are provided as general procedures for use where limits for chloride and sulfate are specified in the individual monographs.

Perform the tests and the controls in glass cylinders of the same diameter and matched as closely as practicable in other respects (see *Nephelometry, Turbidimetry, and Visual Comparison* ⟨855⟩, *Visual Comparison*). Use the same quantities of the same reagents for both the solution under test and the control solution containing the specified volume of chloride or sulfate. If, after acidification, the solution is not perfectly clear, pass it through a filter paper that gives negative tests for chloride and sulfate. Add the precipitant, silver nitrate TS or barium chloride TS as required, to both the test solution and the control solution in immediate sequence.

Where the individual monograph calls for applying the test to a specific volume of a solution of the substance, and the limit for chloride or sulfate corresponds to 0.20 mL or less of 0.020 N hydrochloric acid or sulfuric acid, respectively, apply the test to the solution without further dilution. In such cases maintain the same volume relationships for the control solution as specified for the solution under test. In applying the test to the salts of heavy metals, which normally show an acid reaction, omit the acidification and do not neutralize the solution. Dissolve bismuth salts in a few mL of water and 2 mL of nitric acid before treating with the precipitant.

Chloride—Dissolve the specified quantity of the substance under test in 30 to 40 mL of water, or, where the substance is already in solution, add water to make a total volume of 30 to 40 mL, and, if necessary, neutralize the solution with nitric acid to litmus. Add 1 mL each of nitric acid and of silver nitrate TS and sufficient water to make 50 mL. Mix, and allow to stand for 5 minutes protected from direct sunlight. Unless otherwise specified in the monograph, compare the turbidity, if any, with that produced in a solution containing the volume of 0.020 N hydrochloric acid specified in the monograph.

Sulfate—Dissolve the specified quantity of the substance under test in 30 to 40 mL of water, or, where the substance is already in solution, add water to make a total volume of 30 to 40 mL, and, if necessary, neutralize the solution with hydrochloric acid to litmus. Add 1 mL of 3 N hydrochloric acid, 3 mL of barium chloride TS, and sufficient water to make 50 mL. Mix, and allow to stand for 10 minutes. Unless otherwise specified in the monograph, compare the turbidity, if any, with that produced in a solution containing the volume of 0.020 N sulfuric acid specified in the monograph.

⟨223⟩ DIMETHYLANILINE

The following limit test is provided as a general procedure, when specified in the individual monographs for the gas chromatographic determination in compendial articles of traces of dimethylaniline, a hydrochloric acid scavenger that may have been carried over during processing.

PROCEDURE

Internal standard solution: Unless otherwise specified in the individual monograph, prepare a solution of naphthalene in cyclohexane containing about 50 µg per mL.

Standard preparation: Unless otherwise specified in the individual monograph, transfer 50.0 mg of *N,N*-dimethylaniline to a 50-mL volumetric flask, add 25 mL of 1 N hydrochloric acid, swirl to dissolve, dilute with water to volume, and mix. Transfer 5.0 mL of the resulting solution to a 250-mL volumetric flask, dilute with water to volume, and mix. To a suitable centrifuge tube add 1.0 mL of this solution, 5.0 mL of 1 N sodium hydroxide, and 1.0 mL of *Internal standard solution*, shake vigorously for 1 minute, and centrifuge. Use the clear supernatant as the *Standard preparation*.

Test preparation: Unless otherwise specified in the individual monograph, transfer 1.0 g of the substance to be tested to a suitable centrifuge tube, add 5 mL of 1 N sodium hydroxide, swirl to dissolve the specimen, add 1.0 mL of *Internal standard solution*, shake vigorously for 1 minute, and centrifuge. Use the clear supernatant as the *Test preparation*.

Chromatographic system

(See *Chromatography* 〈621〉.)

The gas chromatograph is equipped with a flame-ionization detector, maintained at about 250°, and a 0.53-mm × 30-m fused silica capillary column bonded with a 1.0-µm film of phase G42. The carrier gas is helium, with a linear velocity of about 30 cm per second and a split ratio of 10 : 1. The column temperature is maintained at 110° for the first 4 minutes after an injection is made, then increased from 110° to 200° at 8° per minute, and then held at 200° for 5 minutes. The injection port temperature is maintained at 250°. Chromatograph the *Standard preparation*, and record the responses as directed for *Procedure* identify the dimethylaniline and naphthalene peaks by their relative retention times, which are 1.0 and 1.3, respectively. The signal-to-noise ratio for the dimethylaniline peak is not less than 10.

Procedure: Inject equal volumes (about 1 µL) of the *Standard preparation* and the *Test preparation* into the chromatograph, record the chromatograms, and measure the areas for the major peaks. The ratio of the response of any dimethylaniline peak to the response of the naphthalene peak obtained from the *Test preparation* is not greater than that obtained from the *Standard preparation* (0.002%).

〈226〉 4-EPIANHYDROTETRACYCLINE

This chromatographic procedure is provided to demonstrate that the content of 4-epianhydrotetracycline, a degradation product of tetracycline, does not exceed the limit given in the individual monograph.

PROCEDURE

EDTA buffer: Dissolve 37.2 g of edetate disodium in 800 mL of water, adjust with ammonium hydroxide to a pH of 7.8, dilute with water to 1000 mL, and mix.

Support phase: Add 5 mL of *EDTA buffer* to 10 g of acid-washed chromatographic siliceous earth for column chromatography, and mix until the siliceous earth is uniformly moistened.

Test solution: Prepare as directed in the individual monograph.

Procedure: Prepare a 15-mm × 170-mm chromatographic tube with a 4-mm × 50-mm outlet by packing it, in increments, with *Support phase*, firmly tamping down each increment, until the tube is filled to a height of about 10 cm. In a beaker, prepare a mixture of 1 g of acid-washed chromatographic siliceous earth for column chromatography and 1 mL of *Test solution*. Transfer the mixture to the top of the column. Dry-wash the beaker with *Support phase*, and transfer to the column to provide an additional 1-cm layer on top of the mixture containing the *Test solution*. Within 30 minutes, pass chloroform through the column, and collect successive fractions of 5.0 mL, 5.0 mL, 10.0 mL, 10.0 mL, and 5.0 mL. Observe the column during elution, and note the appearance of two separate yellow bands. The fraction or fractions containing the first yellow band contain the anhydrotetracyclines. Discard these fractions. The fractions after the first yellow band contain the 4-epianhydrotetracycline. Determine the absorbance of each 4-epianhydrotetracycline fraction at the wavelength of maximum absorbance at about 438 nm, with a suitable spectrophotometer, diluting each fraction, if necessary, with chloroform, and using chloroform as the blank. Calculate the quantity, in mg, of 4-epianhydrotetracycline in each fraction by the formula:

$$\text{Result} = A_U VD/A_S$$

A_U = absorbance of the fraction taken

V = volume of the fraction taken (mL)

D = dilution factor, if the fraction was diluted

A_S = absorptivity of 4-epianhydrotetracycline at 438 nm, 20.08

From the sum of the quantities of 4-epianhydrotetracycline found in the fractions, calculate the percentage of 4-epianhydrotetracycline in relation to the tetracycline hydrochloride equivalent contained in the *Test solution*.

〈227〉 4-AMINOPHENOL IN ACETAMINOPHEN-CONTAINING DRUG PRODUCTS

INTRODUCTION

This general test chapter provides a procedure and acceptance criterion (limit) to control the principal degradation product of acetaminophen, 4-aminophenol, an impurity that can form by hydrolysis of acetaminophen.

SOLUTION PREPARATIONS

All solution preparations that contain acetaminophen or 4-aminophenol should be protected from light and should be stored only for as long as can be supported by solution stability data acquired during verification under actual conditions of use.

Buffer: 4.0 g/L of sodium citrate dihydrate and 1.5 g/L of anhydrous citric acid, in water.

Diluent: *Buffer* and acetonitrile (9:1)

Solution A: 10 mM phosphate buffer prepared by adding 0.60 g of monobasic potassium phosphate and 0.82 g of dibasic sodium phosphate to a 1-L volumetric flask, dissolving and diluting with water to volume to a pH of 7.0

Solution B: Water

Solution C: Acetonitrile

Mobile phase: See *Table 1*.

Table 1

Time (min)	Solution A (%)	Solution B (%)	Solution C (%)
0	90	5	5
5	90	5	5
7	10	10	80
7.1	90	5	5
10	90	5	5

Standard stock solution: 25 µg/mL of USP 4-Aminophenol RS in *Diluent*. Prepare fresh in conjunction with the other solution preparations described below. Discard after 4 h or as supported by solution stability data. [NOTE—See *Chromatographic Adjustments*, solution stability, below.]

System suitability solution: 2.5 µg/mL of USP 4-Aminophenol RS from the *Standard stock solution* in *Diluent*

Sample stock solution: Nominally 10 mg/mL of acetaminophen from a suitable quantity of drug product in *Diluent*. [NOTE—Either component of the *Diluent* may be introduced to the drug product first, followed by addition of the other component to maintain the proportions of *Buffer* and acetonitrile and to achieve the appropriate final volume defined for the *Diluent*.]

[NOTE—It is recommended that the *Sample solution* and *Standard solution* be prepared concurrently within a narrow window of time (e.g., 30 min) for each drug product sample.]

Standard solution: Add 25.0 mL of the *Sample stock solution* and 15.0 mL of *Standard stock solution* to a 50-mL volumetric flask, and dilute with *Diluent* to volume. Pass through a suitable filter of 0.45-µm pore size, discarding the first 3 mL of filtrate.

Sample solution: Add 25.0 mL of the *Sample stock solution* to a 50-mL volumetric flask, and dilute with *Diluent* to volume. Pass through a suitable filter of 0.45-µm pore size, discarding the first 3 mL of filtrate.

CHROMATOGRAPHIC METHOD

Chromatographic system

(See *Chromatography* ⟨621⟩, *System Suitability*.)

Mode: LC

Detector: UV 300 nm

Column: 4.6-mm × 15-cm; 5-µm packing L85

Column temperature: 30°

Flow rate: 1 mL/min

Injection volume: 10 µL

System suitability

Samples: *System suitability solution* and *Standard solution*

[NOTE—The typical retention time for 4-aminophenol is about 4.2–5.3 min.]

Suitability requirements

Resolution: NLT 1.0 between 4-aminophenol and the nearest peak, *Standard solution*

Tailing factor: NMT 1.5 for the 4-aminophenol peak, *Standard solution*

Relative standard deviation: NMT 5.0%, *Standard solution*

Signal-to-noise ratio: NLT 20 for the 4-aminophenol peak, *System suitability solution*

ANALYSIS

Samples: *Standard solution* and *Sample solution*

Inject the *Sample solution* and *Standard solution* for each drug product sample sequentially, i.e., back-to-back.

Calculate the percentage of 4-aminophenol (C_6H_7NO) relative to acetaminophen in the portion of drug product taken:

$$\text{Result} = [r_U/(r_S - r_U)] \times (W_S/W_U) \times 100$$

r_U = peak response for 4-aminophenol from the *Sample solution*

r_S = peak response for 4-aminophenol from the *Standard solution*

W_S = amount of USP 4-Aminophenol RS added to the *Standard solution* (mg)

W_U = amount of acetaminophen in the *Sample solution* (mg)

Acceptance criteria: (unless otherwise stated in the monograph): NMT 0.15% of 4-aminophenol relative to acetaminophen

CHROMATOGRAPHIC ADJUSTMENTS

The retention time of 4-aminophenol can be tuned to achieve specificity for a given product matrix. This allowance supersedes provisions in *Chromatography* ⟨621⟩ for adjusting chromatographic conditions and is intended to provide a measure of flexibility when needed. Suggestions for changing 4-aminophenol retention are given in *Table 2*. The use of a ternary mobile phase system affords ready changes to the ionic strength (water from *Solution B*) and organic strength (acetonitrile from *Solution C*), but this can be simplified to a binary mobile phase system.

Table 2

Condition Change	Change in 4-Aminophenol Retention
Increase in organic strength (*Solution C*)	Decreases 4-aminophenol retention
Decrease in pH (*Solution A*)	Increases 4-aminophenol retention
Increase in ionic strength (*Solution B*)	Decreases 4-aminophenol retention
Increase in column temperature	Increases 4-aminophenol retention

Adjustments to the chromatographic procedure may require verification or validation. See *Validation of Compendial Procedures* ⟨1225⟩ and *Verification of Compendial Procedures* ⟨1226⟩ for guidance. Adjusted chromatographic conditions must meet all system suitability requirements.

Solution stability must be verified under actual conditions of use to ensure 4-aminophenol is stable in the *Sample solution* and the *Standard solution* as evidenced by NMT ±10% change of the 4-aminophenol peak areas.

⟨228⟩ ETHYLENE OXIDE AND DIOXANE

The following procedure is used to determine the contents of residual ethylene oxide and dioxane in the products prepared from ethylene oxide. Unless otherwise directed in the individual monograph, use *Method I*.

Method I

[CAUTION—Ethylene oxide is toxic and flammable. Prepare these solutions in a well-ventilated fume hood, using great care. Protect both hands and face by wearing polyethylene protective gloves and an appropriate face mask. Store all solutions in hermetic containers, and refrigerate between 4° and 8°.]

[NOTE—Before using the polyethylene glycol 200 in this test, remove any volatile components from it by placing 500 mL of polyethylene glycol 200 in a 1000-mL round-bottom flask and attaching the flask to a rotary evaporator maintained at 60° and under a vacuum of 10–20 mm Hg for 6 h.]

Acetaldehyde solution: 10 µg/mL of acetaldehyde. [NOTE—Prepare immediately before use.]

Ethylene oxide stock solution: 2.5 mg/g of ethylene oxide.

Prepare as follows: Tare a glass-stoppered conical flask, add 50 mL of polyethylene glycol 200, and reweigh the flask. Transfer 5 mL of the liquid ethylene oxide to a 100-mL beaker chilled in a mixture of sodium chloride and ice (1:3). Transfer 300 µL (corresponding to 250 mg) of liquid ethylene oxide to the polyethylene glycol 200, and swirl gently to mix. Replace the stopper, reweigh the flask, and determine the amount of ethylene oxide absorbed by weight difference. Adjust the weight of the mixture with polyethylene glycol 200 to 100.0 g, replace the stopper, and swirl gently to mix. [NOTE—Fill a chilled pressure bottle with liquid ethylene oxide, and store in a freezer when not in use. Use a small piece of polyethylene film to protect the liquid from contact with the rubber gasket. Use an adequately chilled apparatus where appropriate. Prepare this stock solution immediately prior to use, and store in a refrigerator after preparation.]

Ethylene oxide solution: Tare a glass-stoppered conical flask, and chill it in a refrigerator. Add 35 mL of polyethylene glycol 200, and reweigh the flask. Transfer 1 g of chilled *Ethylene oxide stock solution* to the tared conical flask. Adjust the weight of the solution with polyethylene glycol 200 to 50.0 g, replace the stopper, and swirl gently to mix. Transfer 10 g of this solution to a 50-mL volumetric flask. Add 30 mL of water, and mix. Dilute with water to volume, and mix to obtain a solution containing 10 µg/mL of ethylene oxide. [NOTE—Use an adequately chilled apparatus where appropriate. Prepare immediately before use.]

Dioxane solution: 500 µg/mL of dioxane

Standard solution A: Transfer 0.1 mL of *Ethylene oxide solution* to a 10-mL pressure headspace vial. [NOTE—Other sizes such as a 22-mL pressure headspace vial may be used, depending on operating conditions; however, the same size must be used for *Standard solution A*, *Standard solution B*, and the *Sample solution*.] Add 0.1 mL of *Acetaldehyde solution* and 0.1 mL of *Dioxane solution*, seal the vial, and mix.

Standard solution B: Transfer 1.0 g of the test substance to a 10-mL pressure headspace vial, and add 0.1 mL of *Ethylene oxide solution*, 0.1 mL of *Dioxane solution*, and 1.0 mL of *N,N*-dimethylacetamide. Seal the vial, and mix.

Sample solution: Transfer 1.0 g of the test substance to a 10-mL pressure headspace vial, and add 1.0 mL of *N,N*-dimethylacetamide and 0.2 mL of water. Seal the vial, and mix.

General Chapters

Chromatographic system
(See *Chromatography* ⟨621⟩, *System Suitability*.)
Mode: Headspace GC
Detector: Flame ionization
Column: 0.32-mm × 30-m glass or quartz capillary; 1.0-µm layer of phase G1
Temperature
Injector port: 150°
Detector: 250°
Column: See the column temperature table below.

Initial Temperature (°)	Temperature Ramp (°/min)	Final Temperature (°)	Hold Time at Final Temperature (min)
50	—	50	5
50	5	180	—
180	30	230	5

Carrier gas: Helium
Linear velocity: 20 cm/s
Injection volume: 1 mL (gaseous headspace)
Injection type: Split ratio 20:1
Headspace sampler
Temperature equilibration time: 45 min
Equilibration temperature
70° for *Standard solution A*
90° for *Standard solution B*
90° for *Sample solution*
Transfer line temperature: 150°
Pressurization time: 1 min
Injection time: 12 s
System suitability
Sample: *Standard solution A*
[NOTE—The relative retention times for acetaldehyde and ethylene oxide are 0.94 and 1.0, respectively.]
Suitability requirements
Resolution: NLT 2.0 between acetaldehyde and ethylene oxide
Signal-to-noise ratio: NLT 5, determined from the dioxane peak
Relative standard deviation: NMT 15%
Analysis
Samples: *Standard solution B* and *Sample solution*
[NOTE—The relative retention times for ethylene oxide and dioxane are 1.0 and 2.5, respectively.]
Calculate the content of ethylene oxide, in ppm, in the portion of the test substance taken:

$$\text{Result} = A_E \times r_U/[(r_S \times W_U) - (r_U \times W_S)]$$

A_E = quantity of ethylene oxide added to *Standard solution B* (µg)
r_U = ethylene oxide peak responses from the *Sample solution*
r_S = ethylene oxide peak responses from *Standard solution B*
W_U = weight of the test substance taken to prepare the *Sample solution* (g)
W_S = weight of the test substance taken to prepare *Standard solution B* (g)

Calculate the content of dioxane, in ppm, in the portion of the test substance taken:

$$\text{Result} = A_D \times r_U/[(r_S \times W_U) - (r_U \times W_S)]$$

A_D = quantity of dioxane added to *Standard solution B* (µg)
r_U = dioxane peak responses from the *Sample solution*
r_S = dioxane peak responses from *Standard solution B*
W_U = weight of the test substance taken to prepare the *Sample solution* (g)
W_S = weight of the test substance taken to prepare *Standard solution B* (g)

Method II

Ethylene oxide standard solution: Dilute 0.5 mL of ethylene oxide in methylene chloride (50 mg/mL)[1] with water to 50.0 mL. [NOTE—The solution is stable for 3 months if stored in vials with polytetrafluoroethylene (polytef)-coated silicon membrane crimped caps at −20°.] Allow to reach room temperature. Dilute 1.0 mL with water to 250.0 mL to obtain a solution having a concentration of 2 µg/mL of ethylene oxide. [NOTE—Use this solution immediately after preparation.]

Dioxane standard solution: 0.05 µL/mL of dioxane

Acetaldehyde standard solution: 10 µg/mL of acetaldehyde. [NOTE—Prepare immediately before use.]

Resolution solution: Add 2.0 mL of *Acetaldehyde standard solution* and 2.0 mL of *Ethylene oxide standard solution* to a 10-mL headspace vial. Seal the vial immediately with a polytef-coated silicon membrane and an aluminum cap, and mix carefully.

Standard solution A: 0.48 µg/mL of ethylene oxide, from *Ethylene oxide standard solution*, and 0.005 µL/mL of dioxane, from *Dioxane standard solution*, in water

Standard solution B: Transfer 1.0 g of the test substance into a 10-mL headspace vial. Add 2.0 mL of *Standard solution A*, seal the vial immediately with a polytef-coated silicon membrane and an aluminum cap, and mix carefully.

Sample solution: Transfer 1.0 g of the test substance into a 10-mL headspace vial. Add 2.0 mL of water, seal the vial immediately with a polytef-coated silicon membrane and an aluminum cap, and mix carefully.

Chromatographic system

(See *Chromatography* ⟨621⟩, *System Suitability*.)

Mode: Headspace GC

Detector: Flame ionization

Column: 0.53-mm × 50-m fused-silica capillary column; 5.0-µm layer of phase G27

Temperature

Injector port: 85°

Detector: 250°

Column: See the column temperature table below.

Initial Temperature (°)	Temperature Ramp (°/min)	Final Temperature (°)	Hold Time at Final Temperature (min)
70	10	250	5

Carrier gas: Helium

Flow rate: 4 mL/min

Injection volume: 1 mL (gaseous headspace)

Injection type: Split ratio 3.5 : 1

Headspace sampler

Temperature equilibration time: 30 min

Equilibration temperature: 80°

System suitability

Sample: *Resolution solution*

[NOTE—The relative retention times for acetaldehyde and ethylene oxide are 0.9 and 1.0, respectively.]

Suitability requirements

Resolution: NLT 2.0 between acetaldehyde and ethylene oxide

Analysis

Samples: *Standard solution B* and *Sample solution*

[NOTE—The relative retention times for ethylene oxide and dioxane are 1.0 and 1.9, respectively.]

Calculate the content of ethylene oxide, in ppm, in the portion of the test substance taken:

$$\mathrm{Result} = C_E \times V \times r_U/[(r_S \times W_U) - (r_U \times W_S)]$$

C_E = concentration of ethylene oxide in the *Standard solution A* (µg/mL)
V = volume of *Standard solution A* added to *Standard solution B* (2.0 mL)
r_U = ethylene oxide peak responses from the *Sample solution*
r_S = ethylene oxide peak responses from *Standard solution B*
W_U = weight of the test substance taken to prepare the *Sample solution* (g)
W_S = weight of the test substance taken to prepare *Standard solution B* (g)

Calculate the content of dioxane, in ppm, in the portion of the test substance taken:

$$\mathrm{Result} = C_D \times V \times \rho \times F \times r_U/[(r_S \times W_U) - (r_U \times W_S)]$$

C_D = concentration of dioxane in *Standard solution A* (µL/mL)
V = volume of *Standard solution A* added to *Standard solution B* (2.0 mL)
ρ = density of dioxane (1.03 g/mL = 1.03 mg/µL)

[1] This is a commercially available solution.

F = conversion factor (1000 µg/mg)
r_U = dioxane peak responses from the *Sample solution*
r_S = dioxane peak responses from *Standard solution B*
W_U = weight of the test substance taken to prepare the *Sample solution* (g)
W_S = weight of the test substance taken to prepare *Standard solution B* (g)

Delete the following:

•⟨231⟩ HEAVY METALS

(Chapter to remain official until January 1, 2018. After January 1, 2018, this chapter will no longer be required. See *General Notices 5.60.20.*)

This test is provided to demonstrate that the content of metallic impurities that are colored by sulfide ion, under the specified test conditions, does not exceed the *Heavy metals* limit specified in the individual monograph in percentage (by weight) of lead in the test substance, as determined by concomitant visual comparison (see *Visual Comparison* in the section *Procedure* under *Spectrophotometry and Light-Scattering* ⟨851⟩) with a control prepared from a *Standard Lead Solution.* [NOTE—Substances that typically will respond to this test are lead, mercury, bismuth, arsenic, antimony, tin, cadmium, silver, copper, and molybdenum.]

Determine the amount of heavy metals by *Method I,* unless otherwise specified in the individual monograph. *Method I* is used for substances that yield clear, colorless preparations under the specified test conditions. *Method II* is used for substances that do not yield clear, colorless preparations under the test conditions specified for *Method I,* or for substances that, by virtue of their complex nature, interfere with the precipitation of metals by sulfide ion, or for fixed and volatile oils. *Method III,* a wet-digestion method, is used only in those cases where neither *Method I* nor *Method II* can be used.

Special Reagents

Lead Nitrate Stock Solution—Dissolve 159.8 mg of lead nitrate in 100 mL of water to which has been added 1 mL of nitric acid, then dilute with water to 1000 mL. Prepare and store this solution in glass containers free from soluble lead salts.

Standard Lead Solution—On the day of use, dilute 10.0 mL of *Lead Nitrate Stock Solution* with water to 100.0 mL. Each mL of *Standard Lead Solution* contains the equivalent of 10 µg of lead. A comparison solution prepared on the basis of 100 µL of *Standard Lead Solution* per g of substance being tested contains the equivalent of 1 part of lead per million parts of substance being tested.

METHOD I

pH 3.5 Acetate Buffer—Dissolve 25.0 g of ammonium acetate in 25 mL of water, and add 38.0 mL of 6 N hydrochloric acid. Adjust, if necessary, with 6 N ammonium hydroxide or 6 N hydrochloric acid to a pH of 3.5, dilute with water to 100 mL, and mix.

Standard Preparation—Into a 50-mL color-comparison tube pipet 2 mL of *Standard Lead Solution* (20 µg of Pb), and dilute with water to 25 mL. Using a pH meter or short-range pH indicator paper as external indicator, adjust with 1 N acetic acid or 6 N ammonium hydroxide to a pH between 3.0 and 4.0, dilute with water to 40 mL, and mix.

Test Preparation—Into a 50-mL color-comparison tube place 25 mL of the solution prepared for the test as directed in the individual monograph; or, using the designated volume of acid where specified in the individual monograph, dissolve in and dilute with water to 25 mL the quantity, in g, of the substance to be tested, as calculated by the formula:

$$2.0/(1000L)$$

in which L is the *Heavy metals* limit, as a percentage. Using a pH meter or short-range pH indicator paper as external indicator, adjust with 1 N acetic acid or 6 N ammonium hydroxide to a pH between 3.0 and 4.0, dilute with water to 40 mL, and mix.

Monitor Preparation—Into a third 50-mL color-comparison tube place 25 mL of a solution prepared as directed for *Test Preparation,* and add 2.0 mL of *Standard Lead Solution.* Using a pH meter or short-range pH indicator paper as external indicator, adjust with 1 N acetic acid or 6 N ammonium hydroxide to a pH between 3.0 and 4.0, dilute with water to 40 mL, and mix.

Procedure—To each of the three tubes containing the *Standard Preparation,* the *Test Preparation,* and the *Monitor Preparation,* add 2 mL of *pH 3.5 Acetate Buffer,* then add 1.2 mL of thioacetamide–glycerin base TS, dilute with water to 50 mL, mix,

General Chapters

allow to stand for 2 minutes, and view downward over a white surface*: the color of the solution from the *Test Preparation* is not darker than that of the solution from the *Standard Preparation*, and the color of the solution from the *Monitor Preparation* is equal to or darker than that of the solution from the *Standard Preparation*. [NOTE—If the color of the *Monitor Preparation* is lighter than that of the *Standard Preparation*, use *Method II* instead of *Method I* for the substance being tested.]

METHOD II

NOTE—This method does not recover mercury.

pH 3.5 Acetate Buffer—Prepare as directed under *Method I*.

Standard Preparation—Prepare as directed under *Method I*.

Test Preparation—Use a quantity, in g, of the substance to be tested as calculated by the formula:

$$2.0/(1000L)$$

in which L is the *Heavy metals* limit, in percentage. Transfer the weighed quantity of the substance to a suitable crucible, add sufficient sulfuric acid to wet the substance, and carefully ignite at a low temperature until thoroughly charred. (The crucible may be loosely covered with a suitable lid during the charring.) Add to the carbonized mass 2 mL of nitric acid and 5 drops of sulfuric acid, and heat cautiously until white fumes no longer are evolved. Ignite, preferably in a muffle furnace, at 500° to 600°, until the carbon is completely burned off. Cool, add 4 mL of 6 N hydrochloric acid, cover, digest on a steam bath for 15 minutes, uncover, and slowly evaporate on a steam bath to dryness. Moisten the residue with 1 drop of hydrochloric acid, add 10 mL of hot water, and digest for 2 minutes. Add 6 N ammonium hydroxide dropwise until the solution is just alkaline to litmus paper, dilute with water to 25 mL, and adjust with 1 N acetic acid to a pH between 3.0 and 4.0, using short-range pH indicator paper as an external indicator. Filter if necessary, rinse the crucible and the filter with 10 mL of water, combine the filtrate and rinsing in a 50-mL color-comparison tube, dilute with water to 40 mL, and mix.

Procedure—To each of the tubes containing the *Standard Preparation* and the *Test Preparation*, add 2 mL of *pH 3.5 Acetate Buffer*, then add 1.2 mL of thioacetamide–glycerin base TS, dilute with water to 50 mL, mix, allow to stand for 2 minutes, and view downward over a white surface*: the color of the solution from the *Test Preparation* is not darker than that of the solution from the *Standard Preparation*.

METHOD III

pH 3.5 Acetate Buffer—Prepare as directed under *Method I*.

Standard Preparation—Transfer a mixture of 8 mL of sulfuric acid and 10 mL of nitric acid to a clean, dry, 100-mL Kjeldahl flask, and add a further volume of nitric acid equal to the incremental volume of nitric acid added to the *Test Preparation*. Heat the solution to the production of dense, white fumes; cool; cautiously add 10 mL of water; and, if hydrogen peroxide was used in treating the *Test Preparation*, add a volume of 30 percent hydrogen peroxide equal to that used for the substance being tested. Boil gently to the production of dense, white fumes. Again cool, cautiously add 5 mL of water, mix, and boil gently to the production of dense, white fumes and to a volume of 2 to 3 mL. Cool, dilute cautiously with a few mL of water, add 2.0 mL of *Standard Lead Solution* (20 µg of Pb), and mix. Transfer to a 50-mL color-comparison tube, rinse the flask with water, adding the rinsing to the tube until the volume is 25 mL, and mix.

Test Preparation—Unless otherwise indicated in the individual monograph, use a quantity, in g, of the substance to be tested as calculated by the formula:

$$2.0/(1000L)$$

in which L is the *Heavy metals* limit, as a percentage.

If the substance is a solid—Transfer the weighed quantity of the test substance to a clean, dry, 100-mL Kjeldahl flask. [NOTE—A 300-mL flask may be used if the reaction foams excessively.] Clamp the flask at an angle of 45°, and add a sufficient quantity of a mixture of 8 mL of sulfuric acid and 10 mL of nitric acid to moisten the substance thoroughly. Warm gently until the reaction commences, allow the reaction to subside, and add portions of the same acid mixture, heating after each addition, until a total of 18 mL of the acid mixture has been added. Increase the amount of heat, and boil gently until the solution darkens. Cool, add 2 mL of nitric acid, and heat again until the solution darkens. Continue the heating, followed by addition of nitric acid until no further darkening occurs, then heat strongly to the production of dense, white fumes. Cool, cautiously add 5 mL of water, boil gently to the production of dense, white fumes, and continue heating until the volume is reduced to a few mL. Cool, cautiously add 5 mL of water, and examine the color of the solution. If the color is yellow, cautiously add 1 mL of 30 percent hydrogen peroxide, and again evaporate to the production of dense, white fumes and a volume of 2 to 3 mL. If the solution is still yellow, repeat the addition of 5 mL of water and the peroxide treatment. Cool, dilute cautiously with a few mL of water, and rinse into a 50-mL color-comparison tube, taking care that the combined volume does not exceed 25 mL.

If the substance is a liquid—Transfer the weighed quantity of the test substance to a clean, dry, 100-mL Kjeldahl flask. [NOTE—A 300-mL flask may be used if the reaction foams excessively.] Clamp the flask at an angle of 45°, and cautiously add a

* In those countries or jurisdictions where thioacetamide cannot be used, add 10 mL of freshly prepared hydrogen sulfide TS to each of the tubes, mix, allow to stand for 5 minutes, and view downward over a white surface.

few mL of a mixture of 8 mL of sulfuric acid and 10 mL of nitric acid. Warm gently until the reaction commences, allow the reaction to subside, and proceed as directed for *If the substance is a solid*, beginning with "add portions of the same acid mixture."

Monitor Preparation—Proceed with the digestion, using the same amount of sample and the same procedure as directed in the subsection *If the substance is a solid* in the section *Test Preparation*, until the step "Cool, dilute cautiously with a few mL of water." Add 2.0 mL of *Lead Standard Solution* (20 µg of lead), and mix. Transfer to a 50-mL color comparison tube, rinse the flask with water, adding the rinsing to the tube until the volume is 25 mL, and mix.

Procedure—Treat the *Test Preparation*, the *Standard Preparation*, and the *Monitor Preparation* as follows. Using a pH meter or short-range pH indicator paper as external indicator, adjust the solution to a pH between 3.0 and 4.0 with ammonium hydroxide (a dilute ammonia solution may be used, if desired, as the specified range is approached), dilute with water to 40 mL, and mix.

To each tube add 2 mL of *pH 3.5 Acetate Buffer*, then add 1.2 mL of thioacetamide–glycerin base TS, dilute with water to 50 mL, mix, allow to stand for 2 minutes, and view downward over a white surface*: the color of the *Test Preparation* is not darker than that of the *Standard Preparation*, and the color of the *Monitor Preparation* is equal to or darker than that of the *Standard Preparation*.

Official: January 1, 2018

● (Official 1-Jan-2018)

〈232〉 ELEMENTAL IMPURITIES—LIMITS

INTRODUCTION

This general chapter specifies limits for the amounts of elemental impurities in drug products. Elemental impurities include catalysts and environmental contaminants that may be present in drug substances, excipients, or drug products. These impurities may occur naturally, be added intentionally, or be introduced inadvertently (e.g., by interactions with processing equipment and the container closure system). When elemental impurities are known to be present, have been added, or have the potential for introduction, assurance of compliance to the specified levels is required. A risk-based control strategy may be appropriate when analysts determine how to assure compliance with this standard. Due to the ubiquitous nature of arsenic, cadmium, lead, and mercury, they (at the minimum) must be considered in the risk assessment. Regardless of the approach used, compliance with the limits specified is required for all drug products unless otherwise specified in an individual monograph or excluded in paragraph three of this introduction.

The drug products containing purified proteins and polypeptides (including proteins and polypeptides produced from recombinant or non-recombinant origins), their derivatives, and products of which they are components (e.g., conjugates) are within the scope of this chapter, as are drug products containing synthetically produced polypeptides, polynucleotides, and oligosaccharides.

This chapter does not apply to radiopharmaceuticals, vaccines, cell metabolites, DNA products, allergenic extracts, cells, whole blood, cellular blood components or blood derivatives including plasma and plasma derivatives, dialysate solutions not intended for systemic circulation, and elements that are intentionally included in the drug product for therapeutic benefit. This chapter does not apply to products based on genes (gene therapy), cells (cell therapy), and tissue (tissue engineering).

The limits presented in this chapter do not apply to excipients and drug substances, except where specified in this chapter or in the individual monograph. However, elemental impurity levels present in drug substances and excipients must be known, documented, and made available upon request.

This chapter does not apply to articles intended only for veterinary use. Requirements listed in this chapter also do not apply to total parenteral nutritions (TPNs) and dialysates. Dietary supplements and their ingredients are addressed in *Elemental Contaminants in Dietary Supplements* 〈2232〉.

SPECIATION

The determination of the oxidation state, organic complex, or combination is termed speciation. Each of the elemental impurities has the potential to be present in differing oxidation or complexation states. However, arsenic and mercury are of particular concern because of the differing toxicities of their inorganic and complexed organic forms.

The arsenic limits are based on the inorganic (most toxic) form. Arsenic can be measured using a total-arsenic procedure under the assumption that all arsenic contained in the material under test is in the inorganic form. Where the limit is exceeded using a total-arsenic procedure, it may be possible to show via a procedure that quantifies the different forms that the inorganic form meets the specification.

The mercury limits are based upon the inorganic (2+) oxidation state. The methyl mercury form (most toxic) is rarely an issue for pharmaceuticals. Thus, the limit was established assuming the most common (mercuric) inorganic form. Limits for articles that have the potential to contain methyl mercury (e.g., materials derived from fish) are to be provided in the monograph.

ROUTES OF EXPOSURE

The toxicity of an elemental impurity is related to its extent of exposure (bioavailability). The extent of exposure has been determined for each of the elemental impurities of interest for three routes of administration: oral, parenteral, and inhalational. These limits are based on chronic exposure. Consider the oral permissible daily exposures (PDEs) in *Table 1*, as a starting point in developing specific PDEs for other routes of administration except where otherwise stated in the individual monograph. [NOTE—The routes of administration of drug products are defined in *Pharmaceutical Dosage Forms* 〈1151〉.]

DRUG PRODUCTS

The limits described in the second through fourth columns of *Table 1* are the base daily dose PDEs of the elemental impurities of interest for a drug product taken by a patient according to indicated routes of administration.

Parenteral Products

Parenteral drug products with maximum daily volumes up to 2 L may use the maximum daily volume to calculate permissible concentrations from PDEs. For products whose daily volumes, as specified by labeling and/or established by clinical practice, may exceed 2 L (e.g., saline, dextrose, TPNs, solutions for irrigation), a 2-L volume may be used to calculate permissible concentrations from PDEs.

Table 1. Elemental Impurities for Drug Products

Element	Oral Daily Dose PDE[a] (µg/day)	Parenteral Daily Dose PDE (µg/day)	Inhalational Daily Dose PDE (µg/day)
Cadmium	5	2	2
Lead	5	5	5
Inorganic arsenic[a]	15	15	2
Inorganic mercury[a]	30	3	1
Iridium	100	10	1
Osmium	100	10	1
Palladium	100	10	1
Platinum	100	10	1
Rhodium	100	10	1
Ruthenium	100	10	1
Chromium	11000	1100	3
Molybdenum	3000	1500	10
Nickel	200	20	5
Vanadium	100	10	1
Copper	3000	300	30

[a] See *Speciation* section.

Options for Demonstrating Compliance

DRUG PRODUCT ANALYSIS OPTION

The results obtained from the analysis of a typical dosage unit, scaled to a maximum daily dose, are compared to the *Daily Dose PDE.*

$$\textit{Daily Dose PDE} \geq \text{measured value } (\mu g/g) \times \text{maximum daily dose } (g/day)$$

The measured amount of each impurity is NMT the *Daily Dose PDE,* unless otherwise stated in the individual monograph.

SUMMATION OPTION

Separately add the amounts of each elemental impurity (in µg/g) present in each of the components of the drug product:

$$Daily\ Dose\ PDE \geq [\Sigma^{M}{}_{1}(C_M \times W_M)] \times D_D$$

M = each ingredient used to manufacture a dosage unit
C_M = element concentration in component (drug substance or excipient) (µg/g)
W_M = weight of component in a dosage unit (g/dosage unit)
D_D = number of units in the maximum daily dose (unit/day)

The result of the summation of each impurity is NMT the *Daily Dose PDE*, unless otherwise stated in the individual monograph. Before products can be evaluated using this option, the manufacturer must ensure that additional elemental impurities cannot be inadvertently added through the manufacturing process or via the container closure system over the shelf life of the product.

INDIVIDUAL COMPONENT OPTION

For drug products with a daily dose of NMT 10 g, if all drug substances and excipients in a formulation meet the concentration limits shown in *Table 2*, then these components may be used in any proportion. No further calculation is necessary. While elemental impurities derived from the manufacturing process or the container closure system are not specifically provided for in the *Individual Component Option*, it is expected that the drug product manufacturer will ensure that these sources do not contribute significantly to the total content of elemental impurities.

DRUG SUBSTANCE AND EXCIPIENTS

The concentration of elemental impurities in drug substances and excipients must be controlled and, where present, documented. The acceptable levels for these impurities depend on the material's ultimate use. Therefore, drug product manufacturers must determine the acceptable level of elemental impurities in the drug substances and excipients used to produce their products.

The values provided in *Table 2* are example concentration limits for components (drug substances and excipients) of drug products dosed at a maximum daily dose of 10 g/day. These values serve as default concentration limits to aid discussions between drug product manufacturers and the suppliers of the components of their drug products. [NOTE—Individual components may need to be limited at levels different from those in the table depending on monograph-specific mitigating factors.]

Table 2. Example Concentration Limits for Components of Drug Products with a 10-g Maximum Daily Dose

Element	Concentration Limits (µg/g) for Components Used in Oral Drug Products	Concentration Limits (µg/g) for Components Used in Parenteral Drug Products	Concentration Limits (µg/g) for Components Used in Inhalation Drug Products
Cadmium	0.5	0.2	0.2
Lead	0.5	0.5	0.5
Inorganic arsenic[a]	1.5	1.5	0.2
Inorganic mercury[a]	3	0.3	0.1
Iridium	10	1	0.1
Osmium	10	1	0.1
Palladium	10	1	0.1
Platinum	10	1	0.1
Rhodium	10	1	0.1
Ruthenium	10	1	0.1
Chromium	1100	110	0.3
Molybdenum	300	150	1
Nickel	20	2	0.5
Vanadium	10	1	0.1
Copper	300	30	3

[a] See *Speciation* section.

ANALYTICAL TESTING

If, by process monitoring and supply-chain control, manufacturers can demonstrate compliance, then further testing may not be needed. When testing is done to demonstrate compliance, proceed as directed in *Elemental Impurities—Procedures* ⟨233⟩ and minimally include arsenic, cadmium, lead, and mercury in the *Target Elements* evaluation.

⟨233⟩ ELEMENTAL IMPURITIES—PROCEDURES

INTRODUCTION

This chapter describes two analytical procedures (*Procedures 1* and *2*) for the evaluation of the levels of the elemental impurities. The chapter also describes criteria for acceptable alternative procedures. By means of validation studies, analysts will confirm that the analytical procedures described herein are suitable for use on specified material.

Use of Alternative Procedures

The chapter also describes criteria for acceptable alternative procedures. Alternative procedures that meet the validation requirements herein may be used in accordance with *General Notices and Requirements 6.30, Alternative and Harmonized Methods and Procedures*. Information on the *Requirements for Alternate Procedure Validation* is provided later in this chapter.

Speciation

The determination of the oxidation state, organic complex, or combination is termed *speciation*. Analytical procedures for speciation are not included in this chapter, but examples may be found elsewhere in *USP–NF* and in the literature.

PROCEDURES

• **COMPENDIAL PROCEDURES 1 AND 2**

System standardization and suitability evaluation using applicable reference materials should be performed on the day of analysis.

Procedure and detection technique: *Procedure 1* can be used for elemental impurities generally amenable to detection by inductively coupled plasma–atomic (optical) emission spectroscopy (ICP–AES or ICP–OES). *Procedure 2* can be used for elemental impurities generally amenable to detection by ICP–MS. Before initial use, the analyst should verify that the procedure is appropriate for the instrument and sample used (procedural verification) by meeting the alternative procedure validation requirements below.

Sample preparation: Forms of sample preparation include *Neat, Direct aqueous solution, Direct organic solution*, and *Indirect solution*. The selection of the appropriate sample preparation depends on the material under test and is the responsibility of the analyst. When a sample preparation is not indicated in the monograph, an analyst may use any of the following appropriately validated preparation procedures. In cases where spiking of a material under test is necessary to provide an acceptable signal intensity, the blank should be spiked with the same *Target elements*, and where possible, using the same spiking solution. Standard solutions may contain multiple *Target elements*. [NOTE—All liquid samples should be weighed.]

Neat: Used for liquids or alternative procedures that allow the examination of unsolvated samples.

Direct aqueous solution: Used when the sample is soluble in an aqueous solvent.

Direct organic solution: Used where the sample is soluble in an organic solvent.

Indirect solution: Used when a material is not directly soluble in aqueous or organic solvents. Total metal extraction is the preferred sample preparation approach to obtain an *Indirect solution*. Digest the sample using the *Closed vessel digestion* procedure provided below or one similar to it. The sample preparation scheme should yield sufficient sample to allow quantification of each element at the limit specified in the corresponding monograph or chapter.

Closed vessel digestion: This sample preparation procedure is designed for samples that must be digested in a *Concentrated acid* using a closed vessel digestion apparatus. *Closed vessel digestion* minimizes the loss of volatile impurities. The choice of a *Concentrated acid* depends on the sample matrix. The use of any of the *Concentrated acids* may be appropriate, but each introduces inherent safety risks. Therefore, appropriate safety precautions should be used at all times. [NOTE—Weights and volumes provided may be adjusted to meet the requirements of the digestion apparatus used.]

An example procedure that has been shown to have broad applicability is the following. Dehydrate and predigest 0.5 g of primary sample in 5 mL of freshly prepared *Concentrated acid*. Allow to sit loosely covered for 30 min in a fume hood. Add an additional 10 mL of *Concentrated acid*, and digest, using a closed vessel technique, until digestion or extraction is complete. Repeat, if necessary, by adding an additional 5 mL of *Concentrated acid*. [NOTE—Where closed vessel digestion is necessary, follow the manufacturer's recommended procedures to ensure safe use.]

Alternatively, leachate extraction may be appropriate with justification following scientifically validated metal disposition studies, which may include animal studies, speciation, or other means of studying disposition of the specific metal in the drug product.

Reagents: All reagents used for the preparation of sample and standard solutions should be free of elemental impurities, in accordance with *Plasma Spectrochemistry* ⟨730⟩.

• **PROCEDURE 1: ICP–OES**

Standardization solution 1: 1.5*J* of the *Target element(s)* in a *Matched matrix*

Standardization solution 2: 0.5*J* of the *Target element(s)* in a *Matched matrix*

Sample stock solution: Proceed as directed in *Sample preparation* above. Allow the sample to cool, if necessary. For mercury determination, add an appropriate stabilizer.

Sample solution: Dilute the *Sample stock solution* with an appropriate solvent to obtain a final concentration of the *Target elements* at NMT 1.5*J*.

Blank: *Matched matrix*

Elemental spectrometric system
(See *Plasma Spectrochemistry* ⟨730⟩.)
Mode: ICP
Detector: Optical detection system
Rinse: Diluent used
Standardization: *Standardization solution 1*, *Standardization solution 2*, and *Blank*
System suitability
Sample: *Standardization solution 1*
Suitability requirements
Drift: Compare results obtained from *Standardization solution 1* before and after the analysis of the *Sample solution*.
Suitability criteria: NMT 20% for each *Target element*. [NOTE—If samples are high in mineral content, rinse system well before introducing the *Sample* in order to minimize carryover.]

Analysis: Analyze according to the manufacturer's suggestions for program and wavelength. Calculate and report results on the basis of the original sample size. [NOTE—Appropriate measures must be taken to correct for matrix-induced interferences (e.g., wavelength overlaps).]

• **PROCEDURE 2: ICP–MS**

Standardization solution 1: 1.5*J* of the *Target element(s)* in a *Matched matrix*
Standardization solution 2: 0.5*J* of the *Target element(s)* in a *Matched matrix*
Sample stock solution: Proceed as directed for *Sample preparation* above. Allow the sample to cool, if necessary. For mercury determination, add an appropriate stabilizer.
Sample solution: Dilute the *Sample stock solution* with an appropriate solvent to obtain a final concentration of the *Target elements* at NMT 1.5*J*.
Blank: *Matched matrix*
Elemental spectrometric system
(See *Plasma Spectrochemistry* ⟨730⟩.)
Mode: ICP. [NOTE—An instrument with a cooled spray chamber is recommended. (A collision cell or reaction cell may also be beneficial.)]
Detector: Mass spectrometer
Rinse: Diluent used
Standardization: *Standardization solution 1*, *Standardization solution 2*, and *Blank*
System suitability
Sample: *Standardization solution 1*
Suitability requirements
Drift: Compare results obtained from *Standardization solution 1* before and after the analysis of the *Sample solution*.
Suitability criteria: *Drift* NMT 20% for each *Target element*. [NOTE—If samples are high in mineral content, rinse system well before introducing the *Sample* in order to minimize carryover.]

Analysis: Analyze according to the manufacturer's suggestions for program and *m*/*z*. Calculate and report results based on the original sample size. [NOTE—Appropriate measures must be taken to correct for matrix-induced interferences (e.g., argon chloride interference with arsenic determinations).]

REQUIREMENTS FOR ALTERNATE PROCEDURE VALIDATION

If the specified compendial procedures do not meet the needs of a specific application, an alternative procedure may be developed (see *General Notices and Requirements 6.30, Alternative and Harmonized Methods and Procedures*). Alternative procedures must be validated and shown to be acceptable, in accordance with the validation requirements for alternative procedures as described below. The level of validation necessary to ensure that an alternative procedure is acceptable depends on whether a limit test or a quantitative determination is specified in the monograph. The requirements for the validation of an elemental impurities procedure for each type of determination are described below. Any alternative procedure that has been validated and meets the acceptance criteria that follow is considered to be suitable for use.

LIMIT PROCEDURES

The following section defines the validation parameters for the acceptability of alternative limit procedures. Meeting these requirements must be demonstrated experimentally using an appropriate system suitability procedure and reference material.

The suitability of the method must be determined by conducting studies with the material or mixture under test supplemented with known concentrations of each *Target element* of interest at the appropriate acceptance limit concentration. The material or mixture under test must be spiked before any sample preparation steps are performed.

• **DETECTABILITY**

Standard solution: A preparation of reference materials for the *Target element(s)* at the *Target concentration*
Spiked sample solution 1: Prepare a solution of sample under test, spiked with appropriate reference materials for the *Target elements* at the *Target concentration*, solubilized or digested as described in *Sample preparation*.
Spiked sample solution 2: Prepare a solution of the sample under test, spiked with appropriate reference materials at 80% of the *Target concentration* for the *Target elements*, solubilized or digested as described in *Sample preparation*.
Unspiked sample solution: A sample of material under test, solubilized or digested in the same manner as the *Sample solutions*

General Chapters

Acceptance criteria

Non-instrumental procedures: *Spiked sample solution 1* provides a signal or intensity equivalent to or greater than that of the *Standard solution. Spiked sample solution 2* must provide a signal or intensity less than that of *Spiked sample solution 1*. [NOTE—The signal from each *Spiked sample solution* is NLT the *Unspiked sample solution* determination.]

Instrumental procedures: The average value of the three replicate measurements of *Spiked sample solution 1* is within ±15% of the average value obtained for the replicate measurements of the *Standard solution.* The average value of the replicate measurements of *Spiked sample solution 2* must provide a signal intensity or value less than that of the *Standard solution.* [NOTE—Correct the values obtained for each of the spiked solutions using the *Unspiked sample solution.*]

• **PRECISION FOR INSTRUMENTAL METHODS (REPEATABILITY)**

[NOTE—Non-instrumental precision is demonstrated by meeting the *Detectability* requirement above.]

Sample solutions: Six independent samples of the material under test, spiked with appropriate reference materials for the *Target elements* at the *Target concentration*

Acceptance criteria

Relative standard deviation: NMT 20% for each *Target element*

• **SPECIFICITY**

The procedure must be able to unequivocally assess (see *Validation of Compendial Procedures* ⟨1225⟩) each *Target element* in the presence of components that may be expected to be present, including other *Target elements,* and matrix components.

QUANTITATIVE PROCEDURES

The following section defines the validation parameters for the acceptability of alternative quantitative procedures. Meeting these requirements must be demonstrated experimentally, using an appropriate system suitability procedure and reference materials. Meeting these requirements demonstrates that the procedure is equivalent to the compendial procedure for the purpose of quantifying the *Target elements.*

• **ACCURACY**

Standard solutions: Prepare solutions containing the *Target elements* at concentrations ranging from 50% to 150% of *J*, using appropriate reference materials.

Test samples: Prepare samples of the material under test spiked with appropriate reference materials before any sample preparation steps (digestion or solubilization) at concentrations ranging from 50% to 150% of *J* for each *Target element.*

Acceptance criteria

Spike recovery: 70%–150% for the mean of three replicate preparations at each concentration

• **PRECISION**

Repeatability

Test samples: Six independent samples of material under test (taken from the same lot) spiked with appropriate reference materials for the *Target element(s)* at the indicated level

Acceptance criteria

Relative standard deviation: NMT 20% ($N = 6$) for each *Target element*

Intermediate precision (ruggedness)

Perform the *Repeatability* analysis again either on a different day, with a different instrumentation, with a different analyst, or a combination thereof. Combine the results of this analysis with the *Repeatability* analysis so the total number of analyses is 12.

Acceptance criteria

Relative standard deviation: NMT 25% ($N = 12$) for each *Target element*

• **SPECIFICITY**

The procedure must be able to unequivocally assess (see ⟨1225⟩) each *Target element* in the presence of components that may be expected to be present, including other *Target elements,* and matrix components.

• **LIMIT OF QUANTITATION, RANGE, AND LINEARITY**

Demonstrated by meeting the *Accuracy* requirement.

GLOSSARY

Concentrated acid: Concentrated ultra-pure nitric, sulfuric, hydrochloric, or hydrofluoric acids or *Aqua regia*

Aqua regia: *Aqua regia* is a mixture of concentrated hydrochloric and nitric acids, typically at ratios of 3:1 or 4:1, respectively.

Matched matrix: Solutions having the same solvent composition as the *Sample solution.* In the case of an aqueous solution, *Matched matrix* would indicate that the same acids, acid concentrations, and mercury stabilizer are used in both preparations.

Target elements: Elements with the potential of being present in the material under test. Include arsenic (As), cadmium (Cd), lead (Pb), and mercury (Hg) in the target element evaluation when testing is done to demonstrate compliance. *Target elements* should also include any elements that may be added through material processing or storage.

Target limit or Target concentration: The acceptance value for the elemental impurity being evaluated. Exceeding the *Target limit* indicates that a material under test exceeds the acceptable value. The determination of compliance is addressed in other chapters. [NOTE—When applying this chapter to *Elemental Impurities—Limits* ⟨232⟩ and *Elemental Contaminants in Diet-*

ary Supplements ⟨2232⟩, *Target limits* can be approximated by dividing the *Daily Dose PDEs* by the maximum daily dose for the *Drug Product Analysis Option* in ⟨232⟩ or the *Daily Serving PDE* divided by the maximum daily serving size in ⟨2232⟩.]

J: The concentration (w/w) of the element(s) of interest at the *Target limit*, appropriately diluted to the working range of the instrument. For example, if the target elements are lead and arsenic for an analysis of an oral solid drug product with a daily dose of 10 g/day using inductively coupled plasma–mass spectrometry (ICP–MS), the target limit for these elements would be 0.5 µg/g and 1.5 µg/g (see *Table 2* in ⟨232⟩). However, in this case, the linear dynamic range of the ICP–MS is known to extend from 0.01 ng/mL to 0.1 µg/mL for these elements. Therefore, a dilution factor of at least 1:100 is required to ensure that the analysis occurs in the linear dynamic range of the instrument. *J* would thus equal 5 ng and 15 ng/mL for lead and arsenic, respectively, when the dilution factor is added.

Appropriate reference materials: Where *Appropriate reference materials* are specified in the chapter, certified reference materials (CRM) from a national metrology institute (NMI), or reference materials that are traceable to the CRM of an NMI should be used. An example of an NMI in the United States is the National Institute of Standards and Technology.

⟨241⟩ IRON

This limit test is provided to demonstrate that the content of iron, in either the ferric or the ferrous form, does not exceed the limit for iron specified in the individual monograph. The determination is made by concomitant visual comparison with a control prepared from a standard iron solution.

SPECIAL REAGENTS

Standard Iron Solution

Dissolve 863.4 mg of ferric ammonium sulfate [$FeNH_4(SO_4)_2 \cdot 12H_2O$] in water, add 10 mL of 2 N sulfuric acid, and dilute with water to 100.0 mL. Pipet 10 mL of this solution into a 1000-mL volumetric flask, add 10 mL of 2 N sulfuric acid, dilute with water to volume, and mix. This solution contains the equivalent of 0.01 mg (10 µg) of iron per mL.

Ammonium Thiocyanate Solution

Dissolve 30 g of ammonium thiocyanate in water to make 100 mL.

STANDARD PREPARATION

Into a 50-mL color-comparison tube pipet 1 mL of *Standard Iron Solution* (10 µg of Fe), dilute with water to 45 mL, add 2 mL of hydrochloric acid, and mix.

TEST PREPARATION

Into a 50-mL color comparison tube place the solution prepared for the test as directed in the individual monograph and if necessary dilute with water to 45 mL; or, dissolve in water, and dilute with water to 45 mL the quantity, in g, of the substance to be tested, as calculated by the formula:

$$1.0/(1000L)$$

in which L is the *Iron* limit in percentage. Add 2 mL of hydrochloric acid, and mix.

PROCEDURE

To each of the tubes containing the *Standard Preparation* and the *Test Preparation* add 50 mg of ammonium peroxydisulfate crystals and 3 mL of *Ammonium Thiocyanate Solution*, and mix: the color of the solution from the *Test Preparation* is not darker than that of the solution from the *Standard Preparation*.

General Chapters

〈251〉 LEAD

The imposition of stringent limits on the amounts of lead that may be present in pharmaceutical products has resulted in the use of two methods, of which the one set forth in this chapter depends upon extraction of lead by solutions of dithizone.

Select all reagents for this test to have as low a content of lead as practicable, and store all reagent solutions in containers of borosilicate glass. Thoroughly rinse all glassware with warm dilute nitric acid (1 in 2), followed by water.

SPECIAL REAGENTS

Ammonia-cyanide solution: Dissolve 2 g of potassium cyanide in 15 mL of ammonium hydroxide, and dilute with water to 100 mL.

Ammonium citrate solution: Dissolve 40 g of citric acid in 90 mL of water. Add 2 or 3 drops of phenol red TS, then cautiously add ammonium hydroxide until the solution acquires a reddish color. Remove any lead that may be present by extracting the solution with 20-mL portions of *Dithizone extraction solution* (see below), until the dithizone solution retains its orange-green color.

Diluted standard lead solution: Dilute an accurately measured volume of standard lead solution TS (containing 10 µg of lead per mL), with 9 volumes of dilute nitric acid (1 in 100) to obtain a solution that contains 1 µg of lead per mL.

Dithizone extraction solution: Dissolve 30 mg of dithizone in 1000 mL of chloroform, and add 5 mL of alcohol. Store the solution in a refrigerator.

Before use, shake a suitable volume of the dithizone extraction solution with about half its volume of dilute nitric acid (1 in 100), discarding the nitric acid.

Hydroxylamine hydrochloride solution: Dissolve 20 g of hydroxylamine hydrochloride in sufficient water to make approximately 65 mL. Transfer to a separator, add 5 drops of thymol blue TS, then add ammonium hydroxide until the solution assumes a yellow color. Add 10 mL of sodium diethyldithiocarbamate solution (1 in 25), mix, and allow to stand for 5 min. Extract this solution with successive 10- to 15-mL portions of chloroform until a 5-mL portion of the chloroform extract does not assume a yellow color when shaken with cupric sulfate TS. Add 3 N hydrochloric acid until the solution is pink (if necessary, add 1 or 2 drops more of thymol blue TS), then dilute with water to 100 mL.

Potassium cyanide solution: Dissolve 50 g of potassium cyanide in sufficient water to make 100 mL. Remove the lead from this solution by extraction with successive portions of *Dithizone extraction solution*, as described in *Ammonium citrate solution*, then extract any dithizone remaining in the cyanide solution by shaking with chloroform. Finally, dilute the cyanide solution with sufficient water so that each 100 mL contains 10 g of potassium cyanide.

Standard dithizone solution: Dissolve 10 mg of dithizone in 1000 mL of chloroform. Keep the solution in a glass-stoppered, lead-free bottle, suitably wrapped to protect it from light, and store in a refrigerator.

PROCEDURE

Test preparation or Sample solution

[NOTE—If, in the following preparation, the substance under test reacts too rapidly and begins charring with 5 mL of sulfuric acid before heating, instead use 10 mL of cooled dilute sulfuric acid (1 in 2), and add a few drops of hydrogen peroxide before heating.]

Where the monograph does not specify preparation of a solution, prepare a *Test preparation* or *Sample solution* as follows. [*Caution—Exercise safety precautions in this procedure, because some substances may react with explosive violence when digested with hydrogen peroxide.*]

Transfer 1.0 g of the substance under test to a suitable flask, add 5 mL of sulfuric acid and a few glass beads, and digest on a hot plate in a hood until charring begins. Other suitable means of heating may be substituted. (Add additional sulfuric acid, if necessary, to wet the substance completely, but do not add more than a total of 10 mL.) Add, dropwise and with caution, 30% hydrogen peroxide, allowing the reaction to subside and heat between drops. Add the first few drops very slowly, mix carefully to prevent a rapid reaction, and discontinue heating if foaming becomes excessive. Swirl the solution in the flask to prevent unreacted substance from caking on the walls of the flask. [NOTE—Add peroxide whenever the mixture turns brown or darkens.] Continue the digestion until the substance is completely destroyed, copious fumes of sulfur trioxide are evolved, and the solution is colorless. Cool, and cautiously add 10 mL of water. Evaporate until sulfur trioxide again is evolved, and cool. Repeat this procedure with another 10 mL of water to remove any traces of hydrogen peroxide. Cautiously dilute with 10 mL of water, and cool.

Analysis: Transfer the *Test preparation* or *Sample solution*, rinsing with 10 mL of water, or the volume of the prepared sample specified in the monograph to a separator, and, unless otherwise directed in the monograph, add 6 mL of *Ammonium citrate solution* and 2 mL of *Hydroxylamine hydrochloride solution*. (For the determination of lead in iron salts, use 10 mL of *Ammonium citrate solution*.) Add 2 drops of phenol red TS, and make the solution just alkaline (red in color) by the addition of ammonium hydroxide. Cool the solution if necessary, and add 2 mL of *Potassium cyanide solution*. Immediately extract the solution with 5-mL portions of *Dithizone extraction solution*, draining off each extract into another separator, until the dithizone solution retains

its green color. Shake the combined dithizone solutions for 30 s with 20 mL of dilute nitric acid (1 in 100), and discard the chloroform layer. Add to the acid solution 5.0 mL of *Standard dithizone solution* and 4 mL of *Ammonia-cyanide solution*, and shake for 30 s.

Acceptance criteria: The color of the chloroform layer is of no deeper shade of violet than that of a control made with a volume of *Diluted standard lead solution* equivalent to the amount of lead permitted in the sample under examination and made with the same quantities of the same reagents and in the same manner as in the test with the sample.

⟨261⟩ MERCURY

METHOD I

NOTE—Mercuric dithizonate is light-sensitive. Perform this test in subdued light.

Reagents

DITHIZONE STOCK SOLUTION

Dissolve 40 mg of dithizone in 1000 mL of chloroform.

DITHIZONE TITRANT

Dilute 30.0 mL of *Dithizone Stock Solution* with chloroform to 100.0 mL. This solution contains approximately 12 mg of dithizone per L.

MERCURY STOCK SOLUTION

Transfer 135.4 mg of mercuric chloride to a 100-mL volumetric flask, and dilute with 1 N sulfuric acid to volume. This solution contains the equivalent of 100 mg of Hg in 100 mL.

MERCURY SOLUTION FOR STANDARDIZING DITHIZONE TITRANT

Transfer 2.0 mL of *Mercury Stock Solution* to a 100-mL volumetric flask, and dilute with 1 N sulfuric acid to volume. Each mL of this solution contains the equivalent of 20 µg of Hg.

The following solutions are called for in the limit test for mercury that is specified in the monographs on Ferrous Fumarate, Ferrous Sulfate, and Dried Ferrous Sulfate.

HYDROXYLAMINE HYDROCHLORIDE SOLUTION

Prepare as directed in the test for *Lead* ⟨251⟩.

STANDARD MERCURY SOLUTION

On the day of use, quantitatively dilute 1.0 mL of *Mercury Stock Solution* with 1 N sulfuric acid to 1000 mL. Each mL of the resulting solution contains the equivalent of 1 µg of mercury.

DITHIZONE EXTRACTION SOLUTION

Prepare as directed in the test for *Lead* ⟨251⟩.

DILUTED DITHIZONE EXTRACTION SOLUTION

Just prior to use, dilute 5 mL of *Dithizone Extraction Solution* with 25 mL of chloroform.

Standardization of Dithizone Titrant

Transfer 1.0 mL of *Mercury Solution for Standardizing Dithizone Titrant* to a 250-mL separator, and add 100 mL of 1 N sulfuric acid, 90 mL of water, 1 mL of glacial acetic acid, and 10 mL of hydroxylamine hydrochloride solution (1 in 5). Titrate the solution with *Dithizone Titrant* from a 10-mL microburet, shaking the mixture 20 times after each addition and allowing the chloroform layer to separate, then discarding the chloroform layer. Continue until a final addition of *Dithizone Titrant* is green in color after shaking. Calculate the quantity, in µg, of Hg equivalent to each mL of *Dithizone Titrant* by the formula:

$$20/V$$

in which V is the volume, in mL, of *Dithizone Titrant* added.

Test Preparation

Transfer about 2 g of the substance under test, accurately weighed, to a glass-stoppered, 250-mL conical flask, add 20 mL of a mixture of equal volumes of nitric acid and sulfuric acid, attach a suitable condenser, reflux the mixture for 1 hour, cool, cautiously dilute with water, and boil until fumes of nitrous acid no longer are noticeable. Cool the solution, cautiously dilute with water, transfer to a 200-mL volumetric flask, dilute with water to volume, mix, and filter.

Procedure

Transfer 50.0 mL of *Test Preparation* to a 250-mL separator, and extract with successive small portions of chloroform until the last chloroform extract remains colorless. Discard the chloroform extract, and add to the extracted *Test Preparation* 50 mL of 1 N sulfuric acid, 90 mL of water, 1 mL of glacial acetic acid, and 10 mL of hydroxylamine hydrochloride solution (1 in 5). Proceed as directed under *Standardization of Dithizone Titrant*, beginning with "Titrate the solution." Calculate the amount of mercury.

METHOD IIA AND METHOD IIB

Mercury Detection Instrument

Use any suitable atomic absorption spectrophotometer equipped with a fast-response recorder and capable of measuring the radiation absorbed by mercury vapors at the mercury resonance line of 253.6 nm. [NOTE—Wash all glassware associated with the test with nitric acid, and rinse thoroughly with water before use.]

Aeration Apparatus

The apparatus (see *accompanying diagram*) consists of a flowmeter capable of measuring flow rates from 500 to 1000 mL per minute, connected via a three-way stopcock fitted with a polytef plug to an aeration vessel (250-mL gas washing bottle), followed by a trap, a drying tube packed with magnesium perchlorate, a 10-cm × 25-mm flow-through cell with quartz windows, and terminating with a vent to a fume hood.

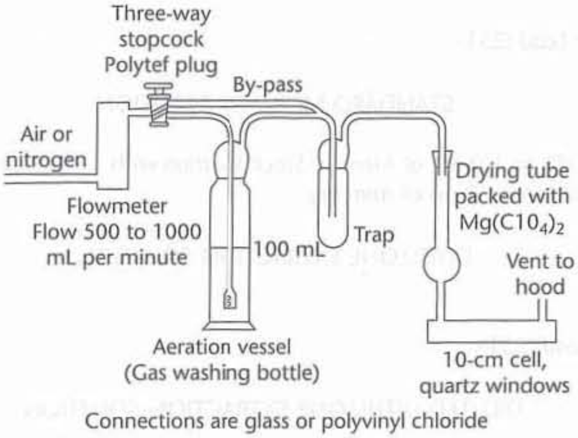

Mercury Aeration Apparatus

General Chapters

Reagents

POTASSIUM PERMANGANATE SOLUTION

Dissolve 5 g of potassium permanganate in 100 mL of water.

HYDROXYLAMINE HYDROCHLORIDE SOLUTION

Dissolve 10 g of hydroxylamine hydrochloride in 100 mL of water.

STANNOUS CHLORIDE SOLUTION

Dissolve 10 g of $SnCl_2 \cdot 2H_2O$ in 20 mL of warm hydrochloric acid, and add 80 mL of water. Prepare fresh each week.

STANDARD MERCURY SOLUTION

Prepare from *Mercury Stock Solution* as directed under *Method I.* Each mL of the *Standard Mercury Solution* contains the equivalent of 1 µg of mercury.

Test Preparation

Unless otherwise directed in the individual monograph, use the quantity, in g, of the test substance calculated by the formula:

$$2.0/L$$

in which L is the mercury limit, in ppm.

METHOD IIA

Standard Preparation

Pipet 2.0 mL of *Standard Mercury Solution* into a 100-mL beaker, and add 35 mL of water, 3 mL of sulfuric acid, and 1 mL of potassium permanganate solution. Cover the beaker with a watch glass, boil for a few seconds, and cool.

Test Preparation

Transfer the calculated amount of the test substance to a 100-mL beaker, and add 35 mL of water. Stir, and warm to assist solution, if necessary. Add 2 drops of phenolphthalein TS, and, as necessary, slowly neutralize with constant stirring, using 1 N sodium hydroxide or 1 N sulfuric acid. Add 3 mL of sulfuric acid and 1 mL of *Potassium Permanganate Solution*. Cover the beaker with a watch glass, boil for a few seconds, and cool.

Procedure

Assemble the *Aeration Apparatus* as shown in the accompanying diagram, with the aeration vessel and the trap empty, and the stopcock in the bypass position. Connect the apparatus to the absorption cell, and adjust the air or nitrogen flow rate so that, in the following procedure, maximum absorption and reproducibility are obtained without excessive foaming in the test solution. Obtain a smooth baseline reading at 253.6 nm, following the manufacturer's instructions for operating the instrument.

Treat the *Standard Preparation* and the *Test Preparation* similarly, as follows. Destroy the excess permanganate by adding *Hydroxylamine Hydrochloride Solution*, dropwise, until the solution is colorless. Immediately wash the solution into the aeration vessel with water, and dilute with water to 100 mL. Add 2 mL of *Stannous Chloride Solution*, and immediately reconnect the aeration vessel to the aeration apparatus. Turn the stopcock from the bypass position to the aerating position, and continue the aeration until the absorption peak has been passed and the recorder pen returns to the baseline. Disconnect the aeration vessel from the apparatus, and wash with water after each use. After correcting for any reagent blank, any absorbance produced by the *Test Preparation* does not exceed that produced by the *Standard Preparation*.

METHOD IIB

Caution—Some substances may react with explosive violence when digested with hydrogen peroxide. Exercise safety precautions at all times.

Standard Preparation

Pipet 2.0 mL of *Standard Mercury Solution* into a 125-mL conical flask, add 3 mL each of nitric acid and sulfuric acid, mix, and add an amount of 30 percent hydrogen peroxide equal to the total amount used in preparing the *Test Preparation*. Attach a suitable water-cooled condenser with a standard-taper joint to fit the flask, and reflux the mixture in a fume hood for 1 hour. Turn off the water circulating through the condenser, and heat until white fumes appear in the flask. Cool, and cautiously add 10 mL of water through the condenser, while swirling the flask. Again heat until white fumes appear, cool, and add an additional 15 mL of water. Remove the condenser, and rinse the sides of the flask to obtain a volume of 35 mL. Add 1 mL of *Potassium Permanganate Solution*, boil for a few seconds, and cool.

Test Preparation

Transfer the calculated amount of the test substance to a 125-mL conical flask. Add 5 mL each of nitric acid and sulfuric acid and a few glass beads. Attach a suitable water-cooled condenser with a standard-taper joint to fit the flask, and digest in a fume hood, preferably on a hot plate, and at a temperature not exceeding 120°, until charring begins. (If additional sulfuric acid is necessary to wet the specimen completely, add it carefully through the condenser, but do not allow the total volume added to exceed 10 mL.) After the test substance has been decomposed by the acid, cautiously add, dropwise through the condenser, 30 percent hydrogen peroxide, allowing the reaction to subside and again heating between drops (add the first few drops very slowly with sufficient mixing, in order to prevent a rapid reaction; discontinue heating if foaming becomes excessive). When the reaction has abated, heat cautiously, rotating the flask occasionally to prevent the specimen from caking on glass exposed to the heating unit. Maintain oxidizing conditions at all times during the digestion by adding small quantities of the hydrogen peroxide solution whenever the mixture turns brown or darkens. Continue the digestion until the organic matter is destroyed, and then reflux the mixture for 1 hour. Turn off the water circulating through the condenser, and heat until fumes of sulfur trioxide are copiously evolved and the solution becomes colorless or retains only a light straw color. Cool, and cautiously add 10 mL of water through the condenser, while swirling the flask. Again heat until white fumes appear. Cool, and cautiously add 15 mL of water. Remove the condenser, and rinse the sides of the flask with a few mL of water to obtain a volume of 35 mL. Add 1 mL of *Potassium Permanganate Solution*, boil for a few seconds, and cool.

Procedure

Proceed as directed for *Procedure* under *Method IIa.*

〈267〉 POROSIMETRY BY MERCURY INTRUSION

In general, different types of pores may be pictured as apertures, channels, or cavities within a solid body or as space (i.e., interstices or voids) between solid particles in a bed, compact, or aggregate. *Porosity* is a term that is often used to indicate the porous nature of solid material and is more precisely defined as the ratio of the volume of accessible pores and voids to the total volume occupied by a given amount of the solid. In addition to the accessible pores, a solid may contain closed pores, which are isolated from the external surface and into which fluids are not able to penetrate. The characterization of closed pores, i.e., cavities with no access to an external surface, is not covered in this general chapter.

Porous materials may take the form of fine or coarse powders, compacts, extrudates, sheets, or monoliths. Their characterization usually involves the determination of the total pore volume or porosity as well as the pore size distribution.

It is well established that the performance of a porous solid (e.g., its strength, reactivity, permeability, or adsorbent power) is dependent on its pore structure. Many different methods have been developed for the characterization of pore structure. In view of the complexity of most porous solids, it is not surprising to find that the results obtained are not always in agreement and that no single technique can be relied upon to provide a complete picture of the pore structure. The choice of the most appropriate method depends on the application of the porous solid, its chemical and physical nature, and the range of pore size.

This chapter provides guidance for measurement of porosity and pore size distribution by mercury porosimetry. It is a comparative test, usually destructive, in which the volume of mercury penetrating a pore or void is determined as a function of an applied hydrostatic pressure that can be related to a pore diameter. Other information such as pore shape and interconnectivi-

ty, the internal and external surface area, powder granulometry, and bulk and tapped density can also be inferred from volume–pressure curves; however, these aspects of the technique do not fall under the scope of this chapter.

Practical considerations presently limit the maximum applied absolute pressure reached by some equipment to about 400 MPa, corresponding to a minimum equivalent pore diameter of approximately 0.003 µm. The maximum diameter will be limited for samples having a significant depth because of the difference in the hydrostatic head of mercury from the top to the bottom of the sample. For most purposes this limit may be regarded as 400 µm.

Interparticle and intraparticle porosity can be determined, but the method does not distinguish between these porosities where they coexist.

The method is suitable for the study of most porous materials. Samples that amalgamate with mercury, such as certain metals, may be unsuitable for this technique or may require a preliminary passivation. Other materials may deform or compact under the applied pressure. In some cases, it may be possible to apply sample compressibility corrections, and useful comparative data may still be obtained.

The mercury porosimetry technique should be considered to be comparative, because for most porous media, a theory is not available to allow an absolute calculation of results of pore size distribution. Therefore, this technique is mainly recommended for development studies.

Mercury is toxic. Appropriate precautions must be observed to safeguard the health of the operator and others working in the area. Waste material must also be disposed of in a suitable manner, according to local regulations.

PRINCIPLE

The technique is based on the measurement of the mercury volume intruded into a porous solid as a function of the applied pressure. The measurement includes only those pores into which mercury can penetrate at the pressure applied.

A nonwetting liquid penetrates into a porous system only under pressure. The pressure applied is in inverse proportion to the inner width of the pore aperture. In the case of cylindrical pores, the correlation between pore diameter and pressure is given by the Washburn equation:

$$d_p = -\frac{4 \cdot \sigma}{p} \cos\theta \qquad (1)$$

p = applied pressure, in pascals
d_p = pore diameter, in meters
σ = surface tension of mercury, in newtons per meter
θ = contact angle of mercury on the sample, in degrees

APPARATUS

The sample holder, referred to as a penetrometer or dilatometer, has a calibrated capillary tube, through which the sample can be evacuated and through which mercury can enter. The capillary tube is attached to a wider tube in which the test sample is placed. The change in the volume of mercury intruded is usually measured by the change in capacitance between the mercury column in the capillary tube and a metal sleeve around the outside of the capillary tube. If precise measurements are required, the internal volume of the capillary tube should be between 20% and 90% of the expected pore and void volume of the sample. Because different materials exhibit a wide range of open porosities, a number of penetrometers with different diameter capillary tubes and sample volumes may be required. A typical setup for a mercury porosimeter instrument is given in *Figure 1*. The porosimeter may have separate ports for high- and low-pressure operation, or the low-pressure measurement may be carried out on a separate unit.

The pressure range is typically 4 kPa to 300 kPa for low-pressure operation and above 300 kPa for high-pressure operation, depending on the design of the particular apparatus and on the intended use.

General Chapters

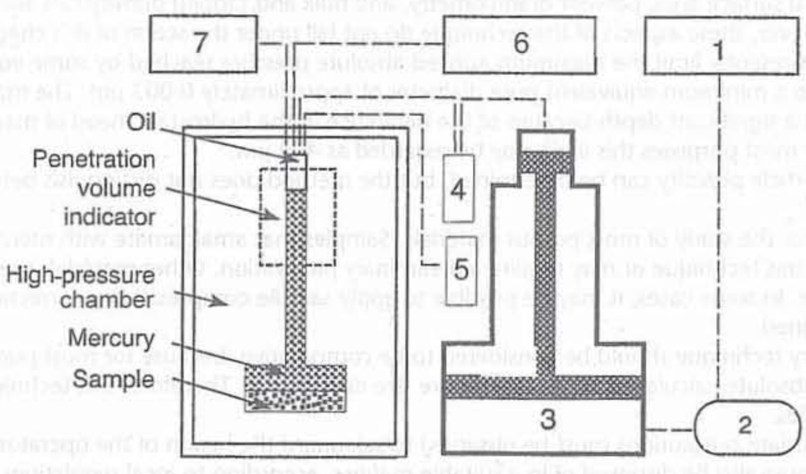

Figure 1. Example of the setup of a mercury porosimeter instrument.

METHOD

Sample Preparation

The sample is pretreated to remove adsorbed material that can obscure its accessible porosity by either heating and/or evacuation or by flowing inert gas. It may be possible to passivate the surface of wettable or amalgam-forming solids by producing a thin layer of oxide, or by coating with stearate. The sample of the pretreated solid is weighed and transferred to the penetrometer. The pore system of the sample is then degassed in a vacuum to a maximum residual pressure of 7 Pa.

Filling the Penetrometer with Mercury

Use mercury of analytical quality. The sample is overlaid with mercury under vacuum. The vacuum is required to ensure the transfer of mercury from the reservoir to the penetrometer. In a filled penetrometer, the filling pressure is comprised of the applied pressure plus the pressure contribution created by the head of mercury contacting the sample. A typical filling pressure would be about 4 kPa. The hydrostatic pressure of the mercury over the sample can be minimized by filling the penetrometer in the horizontal positions.

Low-Pressure Measurement

Admit air or nitrogen in a controlled manner to increase the pressure either in stages corresponding to the particular pore sizes of interest, or continuously at a slow rate. The concomitant change in the length of the mercury column in the capillary tube is recorded. When the maximum required pressure has been reached, reduce the pressure to ambient.

High-Pressure Measurement

After measurement at low-pressure conditions, the penetrometer filled with mercury is transferred to the high-pressure port or unit of the instrument and overlaid with hydraulic fluid. Mercury is intruded into the pore system via the hydraulic fluid. Increase the pressure in the system to the maximum pressure reached in the low-pressure measurement, and record the intrusion volume at this pressure, because subsequent intrusion volumes are calculated from this initial volume. Increase the pressure either in stages corresponding to the particular pore sizes of interest, or continuously at a slow rate. The fall in the mercury column is measured up to the maximum required pressure. If required, the pressure may be decreased either in stages or continuously at a slow rate to determine the mercury extrusion curve. Make corrections to take account of changes in the volume of the mercury, the penetrometer, and other components of the volume detector system under elevated pressure. The extent of the corrections may be determined by means of blank measurements under the same conditions. An experimentally determined volume–pressure curve is shown in *Figure 2*.

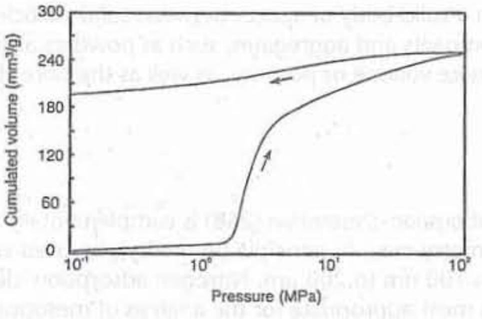

Figure 2. Volume–pressure curve as semilogarithmic plot.

REPORTING OF RESULTS

The pressure readings are converted to pore diameter by means of the Washburn equation or by another model.

The surface tension of mercury, σ, depends not only on the temperature and the material, but also—in the case of markedly curved surface areas—on the radius of curvature. In general, values between $0.41\ N \cdot m^{-1}$ and $0.52\ N \cdot m^{-1}$ are measured at room temperature. If the value is not known, $\sigma = 0.48\ N \cdot m^{-1}$ can be used.

The contact angle of mercury θ in most cases is more than 90°. It may be determined using a contact angle instrument. If the θ value is not known, 130° can be used. Report the values of contact angle, surface tension, and the model used in the calculation. Visualization of the data can be done with several types of graphs. Frequently, in a graphical representation, the pore diameter is plotted on the abscissa and the dependent intruded specific volume on the ordinate to give the pore size distribution. It is appropriate here to choose a logarithmic scale for the abscissa (see *Figure 3*). The spaces between the particles of the solid sample are included as pores in the calculation. If the pores differ in size from the voids, the latter can be separated by choosing the relevant pore size range.

Extrusion curves may not be used for calculating the pore size distribution (for hysteresis, see *Figure 2*), because an intruded part of the mercury always remains in the pore system. The retention ratio may be useful for the qualitative characterization of pores that are only accessible via narrow openings ("ink-bottle pores").

The most common characteristic values, such as the total intruded specific volume, the mean, and the median pore diameter are calculated from the pore size distribution. Moreover, sufficient information should be documented about the sample, the sample preparation, the evacuation conditions, and the instrument used.

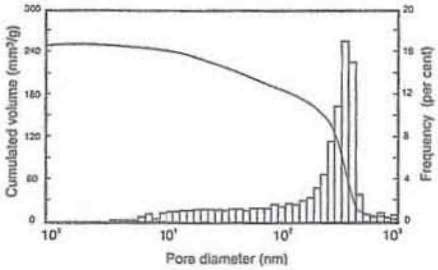

Figure 3. Pore volume distribution as semilogarithmic plot.

CONTROL OF THE INSTRUMENT'S PERFORMANCE

As the mercury porosimetry technique is considered as a comparative test, no details are given in this chapter. However, it is recommended that a stable comparison material should be tested on a regular basis to monitor instrument calibration and performance.

⟨268⟩ POROSITY BY NITROGEN ADSORPTION–DESORPTION

INTRODUCTION

Porosity is a term typically used to indicate the porous nature of solid material and is more precisely defined as the ratio of the volume of accessible pores and voids to the total volume occupied by a given amount of the solid. Closed or inaccessible pores that are isolated from the external surface are excluded from this definition of pore volume. Pores (or voids) may consist

General Chapters

of apertures, channels, or cavities within a solid body or spaces between solid particles in a compact or aggregate. Pores exist in a variety of solid materials beyond compacts and aggregates, such as powders and tablets, and their characterization usually involves the determination of the total pore volume or porosity, as well as the pore size distribution. Pores generally are classified by size into the following groups:

- Micropores—less than 2 nm
- Mesopores—2 to 50 nm
- Macropores—greater than 50 nm

The method in *Porosity by Nitrogen Adsorption–Desorption* ⟨268⟩ is complementary to that in general chapter *Porosimetry by Mercury Intrusion* ⟨267⟩. Mercury porosimetry may, in principle (in theory), be used with pore diameters from 3 nm to 400 µm but is most applicable in the range from 100 nm to 200 µm. Nitrogen adsorption–desorption may be used to characterize pores smaller than about 300 nm but is most appropriate for the analysis of mesopores and into the low macropore range from 2 to 100 nm.

APPARATUS

Measurements are most commonly performed using the static volumetric procedure, although dynamic flow methods also may be employed. Users of commercially available equipment should refer to the manufacturer's literature and manual for a description of their particular apparatus. For example, a static volumetric apparatus must provide: evacuation of the system to a pressure of less than 10 Pa, delivery of known volumes of high-purity nitrogen and helium, accurate measurement of pressure and temperature, and a means of cooling the sample to liquid nitrogen temperature.

MEASUREMENT PRINCIPLE

The adsorption of an inert gas onto solid surfaces at low temperatures is a well-known phenomenon and is the basis for measurement of the surface area of solids (see general chapter *Specific Surface Area* ⟨846⟩). As gas adsorbs to a surface, it can condense into accessible pores. The total pore volume and pore size distribution can be derived from the gas adsorption isotherm, which is the measure of amount adsorbed as a function of adsorbate partial pressure. Adsorption isotherms fall into six general categories, depending on the relative energetics of adsorption and the presence of pores. *Figure 1* shows six general categories of adsorption isotherms.

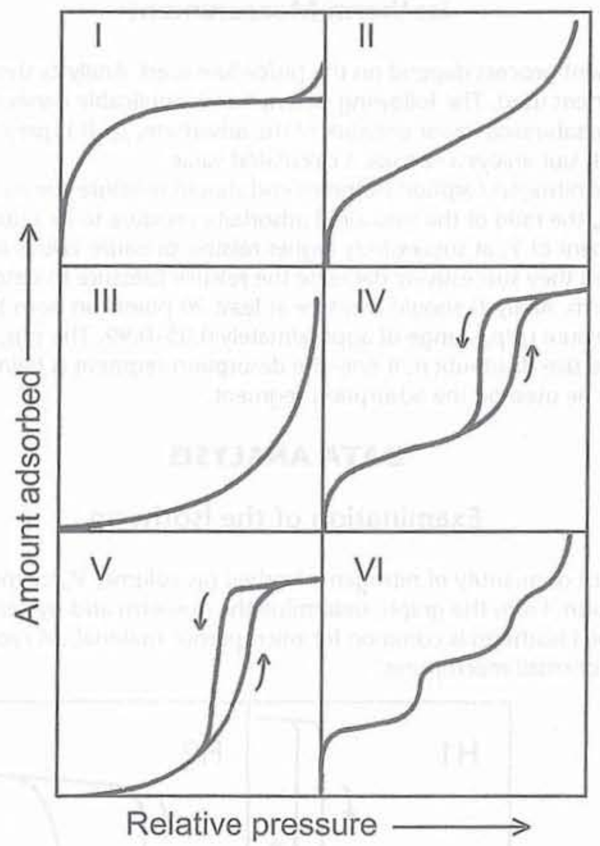

Figure 1. Isotherm Types. [Reproduced with permission and modification from: Sing KSW, Everett DH, Haul RAW, et al. Reporting physisorption for gas/solid systems with special reference to the determination of surface area and porosity (recommendations 1984). *Pure Appl Chem.* 1985;57(4):603–619, *Figure 2.*]

Micropores (pore sizes less than 2 nm) frequently give rise to type I isotherms. Mesopores and macropores normally yield type IV isotherms, but for pores greater than about 100 nm hysteresis may be difficult to observe, thus yielding a type II isotherm. Although some information, such as the total porosity, can be derived for microporous materials, the determination of pore size distributions in that size range is outside the scope of this chapter.

The preferred adsorbate is nitrogen, and the isotherm is determined at liquid nitrogen temperature (77.4 K). Other adsorbates may be used for special purposes but are not discussed in this chapter.

PROCEDURE

Sample Preparation

Before analysis, analysts should outgas the sample to remove gases and vapors that may have become physically adsorbed onto the surface. The outgassing conditions must be demonstrated to yield reproducible adsorption–desorption, a constant sample weight, and no detectable physical or chemical changes in the sample. Outgassing of many substances often is achieved by applying a vacuum, by purging the sample in a flowing stream of a nonreactive, dry gas, or by applying an adsorption–desorption cycling procedure. If appropriate, analysts can apply elevated temperatures to increase the rate at which the contaminants leave the surface. Analysts should be cautious when outgassing samples using elevated temperatures to avoid affecting the nature of the surface and the integrity of the sample. If heating is employed, the recommended temperature and time of outgassing should be the minimum needed to achieve reproducible measurement of the adsorption–desorption isotherm.

Analysts should determine the sample mass after outgassing or, alternatively, should determine the mass after the adsorption–desorption measurement. The total surface area of the sample should be greater than 1 m^2 and preferably greater than 5 m^2.

General Chapters

Isotherm Measurement

Specific details of the measurement process depend on the procedure used. Analysts should follow the manufacturer's instructions for the particular instrument used. The following description is applicable generally:

— Analysts should determine the saturated vapor pressure of the adsorbate, p_0. It is preferable to determine p_0 experimentally at the time of measurement, but analysts can use a calculated value.

— Analysts should determine the nitrogen sorption isotherm and should measure the volume adsorbed, V_a, at the lowest desired relative pressure (p/p_0, the ratio of the measured adsorbate pressure to its saturated vapor pressure).

— Analysts repeat the measurement of V_a at successively higher relative pressure values to the maximum desired relative pressure (generally 0.99). Then they successively decrease the relative pressure to determine sorbed amounts on the desorption portion of the isotherm. Analysts should measure at least 20 points on both the adsorption and desorption segments, covering a relative pressure (p/p_0) range of approximately 0.05–0.99. The p/p_0 values can be distributed to achieve the best resolution of the pore size distribution. If only the desorption segment is being used to calculate the pore size distribution, fewer points can be used on the adsorption segment.

DATA ANALYSIS

Examination of the Isotherm

The isotherm is depicted as a plot of quantity of nitrogen adsorbed (as volume, V_a, or moles, n_a) vs. p/p_0. The isotherm data also can be presented in tabular form. From the graph, determine the isotherm and hysteresis types by comparison to the examples in *Figures 1* and *2*. A type I isotherm is common for microporous materials. A type IV isotherm usually is exhibited by materials that contain mesopores or small macropores.

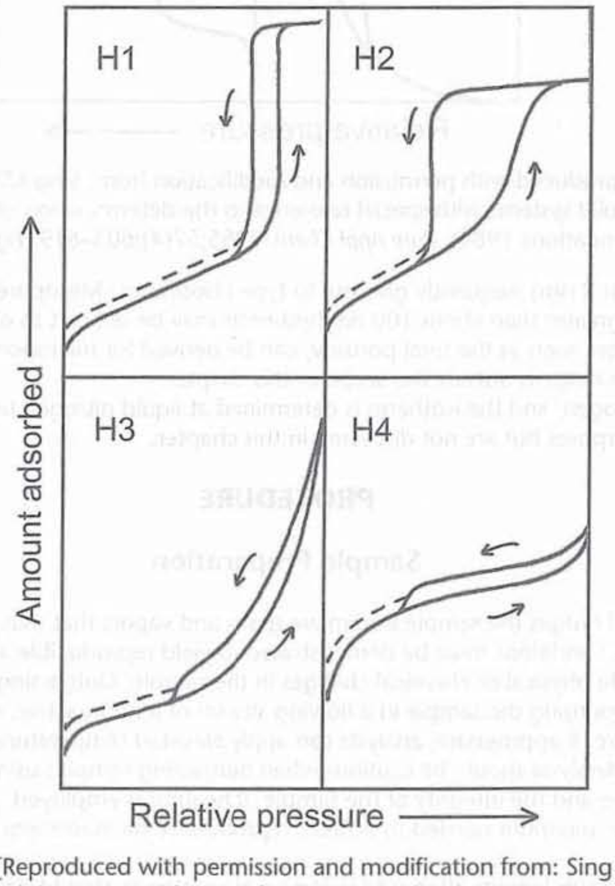

Figure 2. Hysteresis Loop Types. [Reproduced with permission and modification from: Sing KSW, Everett DH, Haul RAW, et al. Reporting physisorption for gas/solid systems with special reference to the determination of surface area and porosity (recommendations 1984). *Pure Appl Chem.* 1985;57(4):603–619, *Figure 3*.]

Constructing a *t*-plot or α_S-plot to compare the isotherm of the test sample to that of a reference isotherm also helps to illustrate the presence of micro- and mesoporosity. The reference isotherm may be calculated using a mathematical expression, but it is recommended that an experimentally determined reference isotherm be used when the adsorbent has chemical properties that are similar to those of the test sample.

The *t*-plot method is based on the *t*-curve, which is a plot of the amount of nitrogen adsorbed on the nonporous solid as a function of *t*, the statistical thickness of the adsorbed layer. The *t* value is calculated:

$$t = \frac{n_a \times \delta_a}{n_m}$$

n_m = monolayer amount
δ_a = thickness of a single molecular layer, usually taken as 0.354 nm for nitrogen

In the α_S-plot method, the amount of nitrogen adsorbed by the reference nonporous solid is normalized by using the amount adsorbed at some fixed relative pressure ($n'_{a,x}$), often taken as 0.4. The normalized adsorption α_S (equal to $n_a/n'_{a,x}$) then is plotted against p/p_0 to obtain an α_S-curve.

The *t*-plot or α_S-plot is constructed by plotting the amount of nitrogen adsorbed by the test sample against *t* or α_S for the reference material, rather than p/p_0. The conversion of p/p_0 to *t* or α_S is carried out by reference to the *t*-curve or α_S-curve. The shape of the plot depends on the nature of the porosity present in the test sample, as follows:

(a) if the *t*- or α_S-plot is linear and passes through the origin, the test sample is nonporous or macroporous
(b) if the test sample contains mesopores, the plot shows an upward deviation at the relative pressure corresponding to the onset of capillary condensation in the smallest mesopores
(c) if the test sample contains micropores, the plot exhibits a downward deviation because multilayers cannot fully develop within the constricted space inside the micropores.

Some materials contain combinations of pores, which may result in a complex plot that is difficult to interpret. In such cases analysts should be cautious when they analyze the isotherm.

Calculation of Pore Size Distribution

This analysis is valid only for calculations of the size distributions of mesopores.

Calculation of the pore size distribution is based on the Kelvin equation:

$$r_k = \frac{2 \times \sigma_l \times v_l \times \cos(\theta) \times 10^3}{R \times T \times \ln(p/p_0)}$$

r_K = core radius of the pore (or Kelvin radius) (nm)
σ_l = adsorbate (nitrogen) liquid surface tension (N/m)
v_l = molar volume of the condensed adsorbate (nitrogen) (cm³/mol)
R = universal gas constant, 8.3144 (J · K⁻¹ · mol⁻¹)
T = temperature (K)
θ = adsorbate contact angle (0 for a wetted surface)

For nitrogen, equation 2 reduces to:

$$r_k = \frac{-0.953}{\ln(p/p_0)}$$

The actual pore radius, r_p, is calculated from the Kelvin radius by correcting for the thickness, *t*, of the adsorbate on the pore walls. For cylindrical pores, $r_p = r_k + t$, and the pore diameter, d_p, is given by $d_p = 2(r_k + t)$. Because of the different geometry of parallel-sided slit-shaped pores, the slit width is given by $r_k + 2t$.

Analysts can calculate the volume pore size distribution using the method of Barrett, Joyner, and Halenda. This model assumes that the pores are rigid and of regular shape (e.g., cylindrical or slit-shaped), micropores are absent, and the pore size distribution does not extend continuously above the largest pores measurable by this procedure, which implies that all of the pores evaluated are filled at the highest relative pressure.

Porosity and pore size distribution calculations that employ the Kelvin equation must be performed using the desorption isotherm. The Kelvin equation was derived for macroscopic systems and is not strictly valid at the molecular scale. Thus, the Kelvin equation relies on an intact meniscus in order to accurately describe experimental phenomena. For the systems discussed in this chapter, this is achieved only for the desorption isotherm. However, for desorption the application of the Kelvin equation at lower pore sizes is limited by the surface tension of the adsorbate. The limit is illustrated by the point of closure of the hysteresis loop in the isotherm. For nitrogen, this point occurs at a relative pressure of about 0.45, corresponding to a limiting cylindrical pore radius of about 2 nm. Thus the Kelvin equation is not applicable for micropores.

Calculation of Micropore Volume

If the *t*- or α_S-plot indicates the presence of micropores, the micropore volume can be obtained from the intercept of the extrapolated linear portion of the curve.

Reported Results

Typically reported results may include total pore volume or porosity, micropore volume, median or mean pore diameter, pore size distribution, and pore surface area.

CALIBRATION AND VERIFICATION OF SYSTEM PERFORMANCE

Analysts should carry out calibration of individual components in accordance with the manufacturer's recommendations. Calibration of pressure transducers and temperature sensors is accomplished with reference to standard pressure- and temperature-measuring devices that have calibrations traceable to national standards. Manifold volume calibration is achieved by appropriate pressure and temperature measurements using constant-temperature volumetric spaces or solids of known, traceable volume.

A certified reference material or locally defined reference material that is traceable to a certified reference material should be tested on a regular basis in order to monitor instrument calibration and performance.

⟨271⟩ READILY CARBONIZABLE SUBSTANCES TEST

In tests for readily carbonizable substances, unless otherwise directed, add the specified quantity of the substance, finely powdered if in solid form, in small portions to the comparison container, which is made of colorless glass resistant to the action of sulfuric acid and contains the specified volume of sulfuric acid (see under *Reagent Specifications* in the section *Reagents, Indicators, and Solutions*).

Stir the mixture with a glass rod until solution is complete, allow the solution to stand for 15 minutes, unless otherwise directed, and compare the color of the solution with that of the specified Matching Fluid (see *Color and Achromicity* ⟨631⟩) in a comparison container, which also is of colorless glass and has the same internal and cross-section dimensions, viewing the fluids transversely against a background of white porcelain or white glass.

When heat is directed in order to effect solution of the substance in the sulfuric acid, mix the sample and the acid in a test tube, heat as directed, and transfer the solution to the comparison container for matching with the designated Matching Fluid (see *Color and Achromicity* ⟨631⟩).

⟨281⟩ RESIDUE ON IGNITION

Portions of this general chapter have been harmonized with the corresponding texts of the *European Pharmacopoeia* and the *Japanese Pharmacopoeia*. The portions that are not harmonized are marked with symbols (•,). The harmonized texts of these pharmacopeias are therefore interchangeable, and the methods of the *European Pharmacopoeia* and/or the *Japanese Pharmacopoeia* may be used for demonstration of compliance instead of the present *United States Pharmacopeia* general chapter. These pharmacopeias have undertaken not to make any unilateral change to this harmonized chapter.

The *Residue on Ignition/Sulfated Ash* test uses a procedure to measure the amount of residual substance not volatilized from a sample when the sample is ignited in the presence of sulfuric acid according to the procedure described below. This test is usually used for determining the content of inorganic impurities in an organic substance.

PROCEDURE

Ignite a suitable crucible (for example, silica, platinum, quartz, or porcelain) at 600 ± 50° for 30 minutes, cool the crucible in a desiccator (silica gel or other suitable desiccant), and weigh it accurately. Weigh accurately •1 to 2 g of the substance, or, the amount specified in the individual monograph, in the crucible.

Moisten the sample with a small amount (usually 1 mL) of sulfuric acid, then heat gently at a temperature as low as practicable until the sample is thoroughly charred. Cool; then,•unless otherwise directed in the individual monograph,, moisten the residue with a small amount (usually 1 mL) of sulfuric acid; heat gently until white fumes are no longer evolved; and ignite at 600 ± 50°, •unless another temperature is specified in the individual monograph,, until the residue is completely incinerated. Ensure that flames are not produced at any time during the procedure. Cool the crucible in a desiccator (silica gel or other suitable desiccant), weigh accurately, and calculate the percentage of residue.

Unless otherwise specified, if the amount of the residue so obtained exceeds the limit specified in the individual monograph, repeat the moistening with sulfuric acid, heating and igniting as before, using a 30-minute ignition period, until two consecu-

tive weighings of the residue do not differ by more than 0.5 mg or until the percentage of residue complies with the limit in the individual monograph.

•Conduct the ignition in a well-ventilated hood, but protected from air currents, and at as low a temperature as is possible to effect the complete combustion of the carbon. A muffle furnace may be used, if desired, and its use is recommended for the final ignition at 600 ± 50°.

Calibration of the muffle furnace may be carried out using an appropriate digital temperature meter and a working thermocouple probe calibrated against a standard thermocouple traceable to the National Institute of Standards and Technology.

Verify the accuracy of the measuring and controlling circuitry of the muffle furnace by checking the positions in the furnace at the control set point temperature of intended use. Select positions that reflect the eventual method of use with respect to location of the specimen under test. The tolerance is ±25° at each position measured.•

⟨291⟩ SELENIUM

STOCK SOLUTION

Dissolve 40.0 mg of metallic selenium in 100 mL of dilute nitric acid (1 in 2) in a 1000-mL volumetric flask, warming gently on a steam bath if necessary to effect solution, add water to volume, and mix. Pipet 5 mL of this solution into a 200-mL volumetric flask, add water to volume, and mix. Each mL of the resulting solution contains the equivalent of 1 µg of selenium (Se).

DIAMINONAPHTHALENE SOLUTION

Dissolve 100 mg of 2,3-diaminonaphthalene and 500 mg of hydroxylamine hydrochloride in 0.1 N hydrochloric acid to make 100 mL. Prepare this solution fresh on the day of use.

STANDARD SOLUTION

Pipet 6 mL of *Stock Solution* into a 150-mL beaker, and add 25 mL of dilute nitric acid (1 in 30) and 25 mL of water.

TEST SOLUTION

Clean combustion of the test material is an important factor in conducting the test. For compounds that burn poorly and produce soot, the addition of magnesium oxide usually results in more thorough combustion and reduces soot formation. Where the need to add magnesium oxide has been identified, it is specified in the individual monograph. Using a 1000-mL combustion flask and using 25 mL of dilute nitric acid (1 in 30) as the absorbing liquid, proceed as directed under *Oxygen Flask Combustion* ⟨471⟩, using a test specimen weighing 100 to 200 mg, unless directed otherwise in the individual monograph. Upon completion of the combustion, place a few mL of water in the cup, loosen the stopper, and rinse the stopper, the specimen holder, and the sides of the flask with about 10 mL of water. Transfer the solution with the aid of about 20 mL of water to a 150-mL beaker, and heat gently to the boiling temperature. Boil for 10 minutes, and allow the solution to cool to room temperature.

PROCEDURE

Treat the *Standard Solution*, the *Test Solution*, and the reagent blank consisting of 25 mL of dilute nitric acid (1 in 30) and 25 mL of water, concomitantly and in parallel, as follows. Add ammonium hydroxide solution (1 in 2) to adjust to a pH of 2.0 ± 0.2. Dilute with water to 60 mL, and transfer to a low-actinic separator with the aid of 10 mL of water, adding the 10 mL of rinsings to the separator. Add 200 mg of hydroxylamine hydrochloride, swirl to dissolve, immediately add 5.0 mL of *Diaminonaphthalene Solution*, insert the stopper, and swirl to mix. Allow the solution to stand at room temperature for 100 minutes. Add 5.0 mL of cyclohexane, shake vigorously for 2 minutes, and allow the layers to separate. Discard the aqueous layer, and centrifuge the cyclohexane extract to remove any dispersed water. Determine the absorbances of the cyclohexane extracts of the *Test Solution* and the *Standard Solution* in a 1-cm cell at the wavelength of maximum absorbance at about 380 nm, with a suitable spectrophotometer, using the cyclohexane extract of the reagent blank as the blank, and compare the absorbances: the absorbance of the *Test Solution* is not greater than that of the *Standard Solution* where a 200-mg test specimen has been taken, or is not greater than one-half that of the *Standard Solution* where a 100-mg test specimen has been taken.

OTHER TESTS AND ASSAYS

⟨301⟩ ACID-NEUTRALIZING CAPACITY

[NOTE—All tests shall be conducted at a temperature of 37 ± 3°.]

Standardization of pH meter: Standardize a pH meter using the 0.05 m potassium biphthalate and 0.05 m potassium tetraoxalate standardizing buffers as described under *pH* ⟨791⟩.

Magnetic stirrer: Transfer 100 mL of water to a 250-mL beaker containing a 40- × 10-mm (or other suitable size) magnetic stirring bar that is coated with solid perfluorocarbon and has a spin ring at its center. Adjust the power setting of the magnetic stirrer to produce a stirring rate of 300 ± 30 rpm when the stirring bar is centered in the beaker, as determined by a suitable optical tachometer.

Test preparation

Powders: Transfer the accurately weighed portion of the substance specified in the individual monograph to a 250-mL beaker, add 70 mL of water, and mix on the *Magnetic stirrer* for 1 minute.

Effervescent solids: Transfer an accurately weighed quantity, equivalent to the minimum labeled dosage, to a 250-mL beaker, add 10 mL of water, and swirl the beaker gently while allowing the reaction to subside. Add another 10 mL of water, and swirl gently. Wash the walls of the beaker with 50 mL of water, and mix on the *Magnetic stirrer* for 1 minute.

Suspensions and other liquids: Shake the container until the contents are uniform, and determine the density. Transfer an accurately weighed quantity of the uniform mixture, equivalent to the minimum labeled dosage, to a 250-mL beaker, add water to make a total volume of about 70 mL, and mix on the *Magnetic stirrer* for 1 minute.

Lozenges: Accurately weigh not fewer than 20 lozenges, and determine the average weight. Select and weigh 2 lozenges, and transfer them to a 250-mL beaker containing 70 mL of water.

Nonchewable tablets: Weigh not fewer than 20 tablets, and determine the average tablet weight. Grind the tablets to a fine powder, mix to obtain a uniform mixture, and transfer an accurately weighed quantity of it, equivalent to the minimum labeled dosage, to a 250-mL beaker. If wetting is desired, add not more than 5 mL of alcohol (neutralized to an apparent pH of 3.5), and mix to wet the specimen thoroughly. Add 70 mL of water, and mix on the *Magnetic stirrer* for 1 minute.

Chewable tablets: Prepare as directed for *Nonchewable tablets.*

Tablets that are required to be chewed: Transfer 1 Tablet to a 250-mL beaker, add 50 mL of water, and mix on the *Magnetic stirrer* for 1 minute.

Capsules: Weigh accurately not fewer than 20 capsules. Remove the capsule contents completely, with the aid of a cotton swab if necessary. Accurately weigh the empty capsules, and determine the average weight of the contents per capsule. Mix the combined capsule contents to obtain a uniform mixture, and proceed as directed for *Nonchewable tablets*, beginning with "transfer an accurately weighed quantity of it."

PROCEDURES

• **PROCEDURE FOR POWDERS, EFFERVESCENT SOLIDS, SUSPENSIONS AND OTHER LIQUIDS, LOZENGES, NONCHEWABLE TABLETS, CHEWABLE TABLETS, AND CAPSULES**

Pipet 30.0 mL of 1.0 N hydrochloric acid VS into the *Test preparation* while continuing to stir with the *Magnetic stirrer.* [NOTE—Where the acid-neutralizing capacity of the specimen under test is greater than 25 mEq, use 60.0 mL of 1.0 N hydrochloric acid VS, and make the appropriate modifications in the calculation.] Stir for 15 minutes, accurately timed, after the addition of the acid, begin to titrate immediately, and in a period not to exceed an additional 5 minutes, titrate the excess hydrochloric acid with 0.5 N sodium hydroxide VS to attain a stable (for 10 to 15 seconds) pH of 3.5. Calculate the number of mEq of acid consumed by the formula:

$$\text{Total mEq} = (30 \times N_{HCl}) - (V_{NaOH} \times N_{NaOH})$$

N_{HCl} = normality of hydrochloric acid VS
V_{NaOH} = volume of sodium hydroxide VS used for titration
N_{NaOH} = normality of sodium hydroxide VS

Express the result in terms of mEq of acid consumed per g of the substance tested.

General Chapters

• **PROCEDURE FOR TABLETS THAT ARE REQUIRED TO BE CHEWED**

Pipet 30.0 mL of 1.0 N hydrochloric acid VS into the *Test preparation* while continuing to stir with the *Magnetic stirrer* for 10 minutes, accurately timed, after the addition of the acid. Discontinue stirring briefly, and without delay remove any gum base from the beaker using a long needle. Promptly rinse the needle with 20 mL of water, collecting the washing in the beaker, and resume stirring for 5 minutes, accurately timed, then begin to titrate immediately, and in a period not to exceed an additional 5 minutes, titrate the excess hydrochloric acid with 0.5 N sodium hydroxide VS to attain a stable (for 10 to 15 seconds) pH of 3.5. Calculate the number of mEq of acid consumed by the Tablet tested by the formula:

$$\text{Total mEq} = (30 \times N_{HCl}) - (V_{NaOH} \times N_{NaOH})$$

〈311〉 ALGINATES ASSAY

APPARATUS

The required apparatus (see *Figure 1*) contains a capillary metering valve, A, followed by a flowmeter, B, to control and monitor the flow of nitrogen through the system. Halogenated vinyl plastic tubing* and a rubber fitting, C, are used to connect the flowmeter to a sidearm of a reaction flask, D. Flask D is a 250-mL round-bottom, boiling flask, resting in a suitable heating mantle, E. Flask D is provided with a 225-mm Hopkins coil reflux condenser, F. The condenser terminates in a U-shaped trap, G, which contains two 25-g bands of 20-mesh zinc, the bands being bounded and separated by three 3-inch plugs of glass wool. The trap terminates in an adapter, H, that by means of a halogenated vinyl plastic tubing and a twistcock connector, I, connects with a 250-mL gas washing bottle, J. The inlet (bubbling) tube extends almost to the bottom of the gas washing bottle, and it terminates in a fritted disk having a coarse porosity. The size of all glass joints is $^{24}/_{40}$, except for the $^{45}/_{50}$ joint of the gas washing bottle.

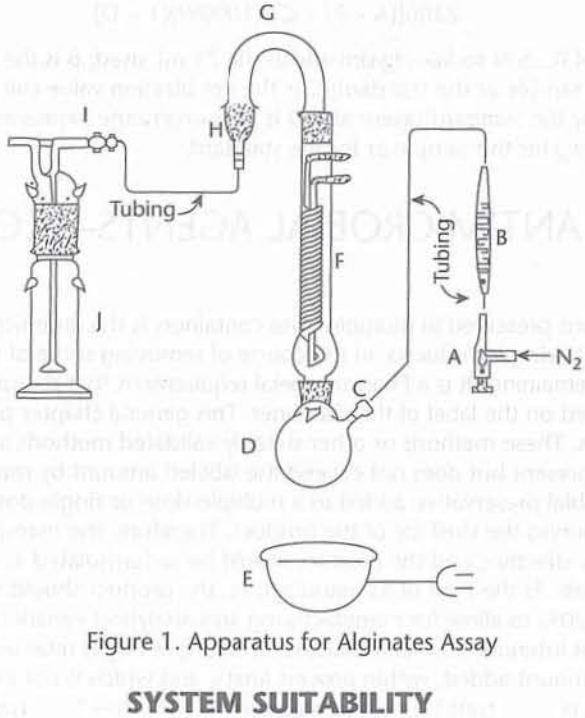

Figure 1. Apparatus for Alginates Assay

SYSTEM SUITABILITY

Using D-glucuronolactone as the standard, proceed as directed for *Procedure*, but do not perform the preboiling steps. The system is suitable if the following criteria are met: (1) a blank determination results in a net titration value, C, between 0.02 and 0.06 mEq, calculated as follows:

$$A_b - B_b$$

* This type of tubing is commonly referred to as Tygon tubing. This note is added for clarity and it does not constitute USP's endorsement of this product.

General Chapters

in which A_b is the number of mEq of 0.25 N sodium hydroxide in the 25 mL used, and B_b is the number of mEq of 0.1 N hydrochloric acid used in the blank titration; and (2) the percentage of carbon dioxide, CO_2, obtained from the standard is between 24.2% and 25.7%.

PROCEDURE

Unless otherwise directed in the individual monograph, transfer a specimen of about 250 mg, accurately weighed, into the reaction flask, D, add 50 mL of 0.1 N hydrochloric acid, insert several boiling chips, and connect the flask to the reflux condenser, F, using phosphoric acid as a lubricant. [NOTE—Stopcock grease may be used for the other connections.] Connect the nitrogen line to the sidearm of the flask, and adjust the flow of cooling water to about 2 L per minute.

[NOTE—The following preboiling steps, outlined in this paragraph, are optional and need only be performed when the presence of inorganic carbonates is suspected.] Maintain the flow of nitrogen through the apparatus at 90 to 100 mL per minute. Raise the heating mantle, E, to the flask, heat the specimen to boiling, and boil gently for 2 minutes. Turn the heat off, lower the mantle, E, and allow to cool for about 10 minutes.

Connect the empty gas washing bottle assembly, J, and sweep the system with nitrogen at a rate of 90 to 100 mL per minute for 5 minutes. Reduce the nitrogen flow to 60 to 65 mL per minute, add 10 drops of butyl alcohol, 25.0 mL of 0.25 N sodium hydroxide VS, and 50 mL of distilled water into the bottle, rinsing down the inside of the gas washing bottle, and replace the cap. Detach the rubber fitting, C, from sidearm, and add 46 mL of hydrochloric acid through the sidearm of the boiling flask. Reattach the nitrogen line, raise the heating mantle, and heat the reaction mixture to boiling. After 2 hours of boiling, increase the nitrogen flow to 90 to 100 mL per minute, discontinue the heating, and lower the mantle. Allow to cool for 10 minutes. Disconnect, and disassemble the gas washing bottle. Using a directed stream of distilled water, thoroughly rinse all parts of the bubbling tube and cap, collecting the washings in the gas washing bottle. Use nitrogen to gently force all water out of the bubbling tube. To the bottle immediately add 10 mL of 10% barium chloride solution and a stirring bar. Insert a tight stopper, and stir gently for 1 minute. Allow to stand for at least 5 minutes. Add three drops of phenolphthalein TS, and titrate with 0.1 N hydrochloric acid VS. Perform a blank determination (see *Residual Titrations* under *Titrimetry* ⟨541⟩). Calculate the percentage of carbon dioxide, CO_2, by the formula:

$$2200[(A - B) - C]/(1000W)(1 - D)$$

in which A is the number of mEq of 0.25 N sodium hydroxide in the 25 mL used; B is the number of mEq of 0.1 N hydrochloric acid used for the titration of the sample or the standard; C is the net titration value calculated in the blank determination; W is the weight, in g, of the sample or the standard taken; and D is the percentage expressed as a decimal (1 decimal place), obtained in the test for *Loss on drying* for the sample or for the standard.

⟨341⟩ ANTIMICROBIAL AGENTS—CONTENT

An essential component of Injections preserved in multiple-dose containers is the antimicrobial agent or antimicrobial agents present to reduce the hazard of having introduced, in the course of removing some of the contents, accidental microbial contamination of the contents remaining. It is a Pharmacopeial requirement that the presence and amount added of such antimicrobial agent(s) be declared on the label of the container. This general chapter provides methods for the most commonly used antimicrobial agents. These methods or other suitably validated methods are to be used to demonstrate that the declared antimicrobial agent is present but does not exceed the labeled amount by more than 20%.

The concentration of an antimicrobial preservative added to a multiple-dose or single-dose parenteral, otic, nasal, and ophthalmic preparation may diminish during the shelf life of the product. Therefore, the manufacturer shall determine the lowest level at which the preservative is effective, and the product should be so formulated as to assure that this level is exceeded throughout the product's shelf life. At the time of its manufacture, the product should contain the declared amount of antimicrobial preservative (within ±20% to allow for manufacturing and analytical variations). The quantitative label statement of the preservative content is not intended to mean that the labeled quantity is retained during the shelf life of the product; rather, it is a statement of the amount added, within process limits, and which is not exceeded by more than 20%. An example of such a label statement is "____(unit) added as preservative". [NOTE—"____(unit)" would be a number followed by the unit of measurement, e.g., 0.015 mg/mL or 0.1%.]

The most commonly used antimicrobial agents include benzyl alcohol; chlorobutanol; phenol; the four homologous esters of *p*-hydroxybenzoic acid (methyl, ethyl, propyl, and butyl parabens); and the two mercurials, phenylmercuric nitrate and thimerosal. The method used for phenylmercuric nitrate is polarographic, whereas quantitative liquid chromatography was used for thimerosal and the four homologous esters of *p*-hydroxybenzoic acid. Gas chromatography is used in the determination of phenol, benzyl alcohol, and chlorobutanol.

GENERAL GAS AND LIQUID CHROMATOGRAPHIC METHODS

The general gas chromatography procedures set forth in the following paragraphs are applicable to the quantitative determination of benzyl alcohol, chlorobutanol, and phenol. Prepare the *Internal standard solution* and the *Standard solution* for each antimicrobial agent as directed below. Unless otherwise directed by the individual monograph, prepare the *Sample solution*

from accurately measured portions of the sample under test and the *Internal standard solution* such that the concentration of the antimicrobial agent and the composition of the solvent correspond closely to the concentration and composition of the *Standard solution*. Suggested operating parameters of the gas chromatograph are provided in this section.

The general high-pressure liquid chromatography (HPLC) procedures set forth in the following paragraphs are applicable to the quantitative determination of parabens and *Thimerosal*. Prepare the *Internal standard solution* and the *Standard solution* for each antimicrobial agent as directed below. Unless otherwise directed, prepare the *Sample solution* from accurately measured portions of the sample under test and the *Internal standard solution*, if applicable, such that the concentration of the antimicrobial agent and the composition of the solvent is about the same as the concentration and composition of the *Standard solution*. Suggested operating parameters of the liquid chromatograph are provided in this section.

• **Benzyl Alcohol**

Diluent: Methanol and water (20:80)

Internal standard solution: 3.8 mg/mL of phenol prepared as follows. Dissolve a suitable amount of phenol in 10% of the flask volume of methanol, and dilute with water to volume.

Standard solution: 1.8 mg/mL of USP Benzyl Alcohol RS and 1.5 mg/mL of phenol prepared as follows. Dissolve 180 mg of USP Benzyl Alcohol RS in 20 mL of methanol contained in a 100-mL volumetric flask. Add 40.0 mL of *Internal standard solution*, and dilute with water to volume.

Chromatographic system

(See *Chromatography* ⟨621⟩, *System Suitability*.)

Mode: GC

Detector: Flame ionization

Column: 30-m × 0.32-mm fused-silica; bonded with a 0.5-µm film of phase G16

Temperatures

Injection port: 200°

Detector: 310°

Column: See *Table 1*.

Table 1

Initial Temperature (°)	Temperature Ramp (°/min)	Final Temperature (°)	Hold Time at Final Temperature (min)
150	0	150	5
150	10	230	7

Carrier gas: Helium

Flow rate (constant): 2 mL/min

Injection volume: 1 µL

Split ratio: 10:1

Run time: 20 min

System suitability

Sample: *Standard solution*

[Note—The relative retention times for benzyl alcohol and phenol are about 1.0 and 1.25, respectively.]

Suitability requirements

Resolution: NLT 2.0 between the benzyl alcohol and phenol peaks

Tailing factor: NMT 2.0 for the benzyl alcohol peak

Relative standard deviation: NMT 2.0% for the peak response ratio of benzyl alcohol to phenol

Analysis

Samples: *Standard solution* and *Sample solution*

Calculate the percentage of the labeled amount of benzyl alcohol (C_7H_8O) in the portion of the sample taken:

$$\text{Result} = (R_U/R_S) \times (C_S/C_U) \times 100$$

R_U = peak response ratio of benzyl alcohol to phenol from the *Sample solution*
R_S = peak response ratio of benzyl alcohol to phenol from the *Standard solution*
C_S = concentration of USP Benzyl Alcohol RS in the *Standard solution*
C_U = nominal concentration of benzyl alcohol in the *Sample solution*

• **Chlorobutanol**

Diluent: Methanol and water (50:50)

Internal standard solution: 10 mg/mL of 2,2,2-trichloroethanol in *Diluent*

Standard stock solution: 5 mg/mL of USP Chlorobutanol RS in methanol

Standard solution: 1.25 mg/mL of USP Chlorobutanol RS and 2 mg/mL of 2,2,2-trichloroethanol prepared as follows. Transfer 2.5 mL of *Standard stock solution*, 2.0 mL of *Internal standard solution*, and 0.5 mL of methanol to a 10-mL volumetric flask. Dilute with water to volume.

Sample stock solution: Quantitatively dilute, if necessary, an accurately measured volume corresponding to 2.5 mg/mL of chlorobutanol in water.
Sample solution: Combine 5.0 mL of *Sample stock solution* with 2.0 mL of *Internal standard solution* in a 10-mL volumetric flask, and dilute with *Diluent* to volume.
Chromatographic system
(See *Chromatography* 〈621〉, *System Suitability*.)
Mode: GC
Detector: Flame ionization
Column: 30-m × 0.32-mm fused-silica; bonded with a 0.25-µm film of phase G16
Temperatures
Injection port: 260°
Detector: 280°
Column: 135°
Carrier gas: Helium
Flow rate: 1 mL/min
Injection volume: 0.5 µL
Split ratio: 10:1
Run time: 12 min
System suitability
Sample: *Standard solution*
[NOTE—The relative retention times for chlorobutanol and 2,2,2-trichloroethanol are about 1.0 and 1.4, respectively.]
Suitability requirements
Resolution: NLT 2.0 between chlorobutanol and 2,2,2-trichloroethanol
Relative standard deviation: NMT 1.0% for the peak response ratio of chlorobutanol to 2,2,2-trichloroethanol
Analysis
Samples: *Standard solution* and *Sample solution*
Calculate the percentage of the labeled amount of chlorobutanol ($C_4H_7Cl_3O$), on the anhydrous basis, in the portion of the sample taken:

$$\text{Result} = (R_U/R_S) \times (C_S/C_U) \times 100$$

R_U = peak response ratio of chlorobutanol to 2,2,2-trichloroethanol from the *Sample solution*
R_S = peak response ratio of chlorobutanol to 2,2,2-trichloroethanol from the *Standard solution*
C_S = concentration of USP Chlorobutanol RS in the *Standard solution*
C_U = nominal concentration of chlorobutanol in the *Sample solution*

• **PHENOL**
Internal standard solution: 2 mg/mL of USP Benzyl Alcohol RS in methanol
Standard stock solution: 4 mg/mL of USP Phenol RS in water
Standard solution: 0.4 mg/mL each of USP Phenol RS and USP Benzyl Alcohol RS prepared as follows. Combine 5.0 mL of *Standard stock solution* with 10.0 mL of *Internal standard solution* in a 50-mL volumetric flask, and dilute with water to volume.
Chromatographic system
(See *Chromatography* 〈621〉, *System Suitability*.)
Mode: GC
Detector: Flame ionization
Column: 30-m × 0.32-mm fused-silica; bonded with a 0.5-µm film of phase G16
Temperatures
Injection port: 200°
Detector: 310°
Column: See *Table 2*.

Table 2

Initial Temperature (°)	Temperature Ramp (°/min)	Final Temperature (°)	Hold Time at Final Temperature (min)
150	0	150	5
150	10	230	7

Carrier gas: Helium
Flow rate (constant flow): 2 mL/min
Injection volume: 1 µL
Split ratio: 10:1
Run time: 20 min

System suitability
Sample: *Standard solution*
[NOTE—The relative retention times for benzyl alcohol and phenol are about 0.85 and 1.0, respectively.]
Suitability requirements
Resolution: NLT 2.0 between benzyl alcohol and phenol
Tailing factor: NMT 2.0 for the phenol peak
Relative standard deviation: NMT 1.0% for the peak response ratio of phenol to benzyl alcohol
Analysis
Samples: *Standard solution* and *Sample solution*
Calculate the percentage of the labeled amount of phenol (C_6H_6O) in the portion of the sample taken:

$$\text{Result} = (R_U/R_S) \times (C_S/C_U) \times 100$$

R_U = peak response ratio of phenol to benzyl alcohol from the *Sample solution*
R_S = peak response ratio of phenol to benzyl alcohol from the *Standard solution*
C_S = concentration of USP Phenol RS in the *Standard solution*
C_U = nominal concentration of phenol in the *Sample solution*

• **METHYLPARABEN AND PROPYLPARABEN**
Buffer: 7 g/L of monobasic potassium phosphate in water
Mobile phase: Methanol and *Buffer* (65:35)
Internal standard solution: 0.013 mg/mL of USP Ethylparaben RS in *Mobile phase*
System suitability solution: 0.01 mg/mL each of USP Butylparaben RS, USP Propylparaben RS, USP Ethylparaben RS, USP Methylparaben RS, and *p*-hydroxybenzoic acid in *Mobile phase*
Standard stock solution: 0.2 mg/mL of USP Methylparaben RS and 0.03 mg/mL of USP Propylparaben RS in *Mobile phase*
Standard solution: Combine 5 mL of *Standard stock solution* with 5 mL of *Internal standard solution*, and extract three times with 10-mL aliquots of diethyl ether. Filter the combined ether layers through anhydrous sodium sulfate. Evaporate the ether extract to dryness, and dissolve the residue in 50 mL of *Mobile phase.*
Sample solution: Combine 5 mL of the specimen under test with 5 mL of *Internal standard solution*, and extract three times with 10-mL aliquots of diethyl ether. Filter the combined ether layers through anhydrous sodium sulfate. Evaporate the ether extract to dryness, and dissolve the residue in 50 mL of *Mobile phase.*
Chromatographic system
(See *Chromatography* ⟨621⟩, *System Suitability*.)
Mode: LC
Detector: UV 272 nm
Columns
Guard: 4.0-mm × 3-mm; packing L1
Analytical: 4.6-mm × 15-cm; 5-µm packing L1
Flow rate: 1.3 mL/min
Injection volume: 10 µL
Run time: 10 min
System suitability
Samples: *System suitability solution* and *Standard solution*
[NOTE—The relative retention times for *p*-hydroxybenzoic acid, methylparaben, ethylparaben, and propylparaben are about 0.58, 1.0, 1.4, and 2.1, respectively.]
Suitability requirements
Resolution: NLT 2.0 between *p*-hydroxybenzoic acid and methylparaben, NLT 2.0 between methylparaben and ethylparaben; *System suitability solution*
Tailing factor: NMT 2.0 for the methylparaben and propylparaben peaks, *Standard solution*
Relative standard deviation: NMT 2.0% for the peak response ratio of methylparaben to ethylparaben, NMT 2.0% for the peak response ratio of propylparaben to ethylparaben; *System suitability solution*
Analysis
Samples: *Standard solution* and *Sample solution*
Calculate the percentage of the labeled amount of methylparaben ($C_8H_8O_3$) in the portion of the sample taken:

$$\text{Result} = (R_U/R_S) \times (C_S/C_U) \times 100$$

R_U = peak response ratio of methylparaben to ethylparaben from the *Sample solution*
R_S = peak response ratio of methylparaben to ethylparaben from the *Standard solution*
C_S = concentration of USP Methylparaben RS in the *Standard solution*
C_U = nominal concentration of methylparaben in the *Sample solution*

Calculate the percentage of the labeled amount of propylparaben ($C_{10}H_{12}O_3$) in the portion of the sample taken:

$$\text{Result} = (R_U/R_S) \times (C_S/C_U) \times 100$$

R_U = peak response ratio of propylparaben to ethylparaben from the *Sample solution*
R_S = peak response ratio of propylparaben to ethylparaben from the *Standard solution*
C_S = concentration of USP Propylparaben RS in the *Standard solution*
C_U = nominal concentration of propylparaben in the *Sample solution*

Ethylparaben and butylparaben may be determined in a similar manner using appropriate internal standard solutions. However, because the extraction recovery is matrix dependent, the user should verify the suitability of the procedure for their drug product and for different product formulations.

• **Thimerosal**

Solution A: Trifluoroacetic acid and water (0.5: 1000)
Mobile phase: Methanol and *Solution A* (60:40)
Standard solution: 25 µg/mL of USP Thimerosal RS in water
Chromatographic system
(See *Chromatography* ⟨621⟩, *System Suitability*.)
Mode: LC
Detector: UV 222 nm
Column: 2.1-mm × 10-cm; 2-µm packing L1
Autosampler temperature: 4°
Flow rate: 0.35 mL/min
Injection volume: 2.5 µL
System suitability
Sample: *Standard solution*
Tailing factor: NMT 1.5
Relative standard deviation: NMT 1.0%
Analysis
Samples: *Standard solution* and *Sample solution*
Calculate the percentage of the labeled amount of thimerosal ($C_9H_9HgNaO_2S$) in the portion of the sample taken:

$$\text{Result} = (r_U/r_S) \times (C_S/C_U) \times 100$$

r_U = peak response of thimerosal from the *Sample solution*
r_S = peak response of thimerosal from the *Standard solution*
C_S = concentration of USP Thimerosal RS in the *Standard solution*
C_U = nominal concentration of thimerosal in the *Sample solution*

POLAROGRAPHIC METHOD

• **Phenylmercuric Nitrate**

Standard stock solution: 0.1 mg/mL of phenylmercuric nitrate in sodium hydroxide solution (1 in 250). Warm, if necessary, to dissolve.
Standard solution: Pipet 10 mL of *Standard stock solution* into a 25-mL volumetric flask, and proceed as directed under *Sample solution* beginning with "add 2 mL of potassium nitrate solution (1 in 100)".
Sample solution: Pipet 10 mL of the specimen under test into a 25-mL volumetric flask, add 2 mL of potassium nitrate solution (1 in 100) and 10 mL of pH 9.2 alkaline borate buffer (see in *Buffer Solutions* in the section *Reagents, Indicators, and Solutions*), and adjust to a pH of 9.2, if necessary, by the addition of 2 N nitric acid. Add 1.5 mL of freshly prepared gelatin solution (1 in 1000), then add the pH 9.2 alkaline borate buffer to volume.
Analysis: Pipet a portion of the *Sample solution* into the polarographic cell, and deaerate by bubbling nitrogen through the solution for 15 min. Insert the dropping mercury electrode of a suitable polarograph (see *Polarography* ⟨801⟩), and record the polarogram from −0.6 to −1.5 volts versus the saturated calomel electrode.
Calculate the quantity, in µg/mL, of phenylmercuric nitrate ($C_6H_5HgNO_3$) in the portion of the sample taken:

$$\text{Result} = 2.5C[(i_d)_U/(i_d)_S]$$

C = concentration of phenylmercuric nitrate in the *Standard solution* (µg/mL)
$(i_d)_U$ = diffusion current of the *Sample solution*, as the difference between the residual current and the limiting current
$(i_d)_S$ = diffusion current of the *Standard solution*, as the difference between the residual current and the limiting current

• **USP Reference Standards ⟨11⟩**
USP Benzyl Alcohol RS
USP Butylparaben RS
USP Chlorobutanol RS
USP Ethylparaben RS
USP Methylparaben RS
USP Phenol RS
USP Propylparaben RS
USP Thimerosal RS

⟨345⟩ ASSAY FOR CITRIC ACID/CITRATE AND PHOSPHATE

INTRODUCTION

The following ion chromatographic general procedure is provided for the determination of citric acid/citrate and phosphate in compendial articles, when specified in the individual monographs. See *Ion Chromatography* ⟨1065⟩ for discussion of the theory and principles of measurements using ion chromatography.

ASSAY

• **Procedure**

Mobile phase: 20 mM sodium hydroxide or potassium hydroxide from an appropriate volume of carbonate-free sodium hydroxide or potassium hydroxide solution of known concentration and water (resistivity NLT 18 megohm-cm). Alternatively, *Mobile phase* can be generated electrolytically using an automatic eluent generator. Protect the *Mobile phase* from atmospheric carbon dioxide.

Standard solution 1 (for the assay of citric acid/citrate only): 20 µg/mL of citrate ($C_6H_5O_7$) in freshly prepared 1 mM sodium hydroxide from USP Citric Acid RS

Standard solution 2 (for the concomitant assay of citrate and phosphate): 20 µg/mL of citrate ($C_6H_5O_7$) and 12 µg/mL of phosphate (PO_4) in freshly prepared 1 mM sodium hydroxide from USP Citric Acid RS and monobasic sodium phosphate

Sample solution (for the assay of citric acid/citrate): Nominally 20 µg/mL of citrate in freshly prepared 1 mM sodium hydroxide, unless otherwise stated in the monograph

Sample solution (for the assay of phosphate): Nominally 12 µg/mL of phosphate in freshly prepared 1 mM sodium hydroxide, unless otherwise stated in the monograph

Chromatographic system

(See *Chromatography* ⟨621⟩, *System Suitability*.)

Mode: LC

Detector: Conductivity with suppression

Columns

Analytical: 4-mm × 25-cm; 13-µm packing L61

Guard: 4-mm × 5-cm; 13-µm packing L61

Temperatures

Column: 30°

Detector: 35°

Suppressor: 4-mm membrane anionic autosuppressor or a suitable chemical suppression system

Flow rate: 2 mL/min

Injection volume: 10 µL

System suitability

Samples: *Standard solution 1* and/or *Standard solution 2*, as appropriate

[Note—The relative retention times for phosphate and citrate are 0.57 and 1.0, respectively.]

Suitability requirements

Tailing factor: NMT 2.0 for the citrate and/or phosphate peaks, as appropriate

Relative standard deviation: NMT 1.5% for six replicate injections for the citrate and/or phosphate peaks, as appropriate

Analysis

Samples: *Standard solution 1* and/or *Standard solution 2*, and *Sample solution*

Unless otherwise stated in the monograph, calculate the concentration of citrate or phosphate in the portion of the *Sample solution* taken:

$$\mathrm{Result} = (r_U/r_S) \times C_S$$

r_U = peak response of the citrate or phosphate peak from the *Sample solution*

r_S = peak response of the citrate or phosphate peak from *Standard solution 1* or *Standard solution 2*

General Chapters

C_S = concentration of citrate or phosphate from *Standard solution 1* or *Standard solution 2* (µg/mL)

〈351〉 ASSAY FOR STEROIDS

The following procedure is applicable for determination of those Pharmacopeial steroids that possess reducing functional groups such as α-ketols.

STANDARD PREPARATION

Dissolve in alcohol a suitable quantity of the USP Reference Standard specified in the individual monograph, previously dried under the conditions specified in the individual monograph and accurately weighed, and dilute quantitatively and stepwise with alcohol to obtain a solution having a concentration of about 10 µg per mL. Pipet 20 mL of this solution into a glass-stoppered, 50-mL conical flask.

ASSAY PREPARATION

Prepare as directed in the individual monograph.

PROCEDURE

To each of the two flasks containing the *Assay Preparation* and the *Standard Preparation,* respectively, and to a similar flask containing 20.0 mL of alcohol to serve as the blank, add 2.0 mL of a solution prepared by dissolving 50 mg of blue tetrazolium in 10 mL of methanol, and mix. Then to each flask add 2.0 mL of a mixture of alcohol and tetramethylammonium hydroxide TS (9:1), mix, and allow to stand in the dark for 90 minutes. Without delay, concomitantly determine the absorbances of the solutions from the *Assay Preparation* and the *Standard Preparation* at about 525 nm, with a suitable spectrophotometer, against the blank. Calculate the result by the formula given in the individual monograph, in which C is the concentration, in µg per mL, of the Reference Standard in the *Standard Preparation;* and A_U and A_S are the absorbances of the solutions from the *Assay Preparation* and the *Standard Preparation,* respectively.

〈371〉 COBALAMIN RADIOTRACER ASSAY

All radioactive determinations required by this method should be made with a suitable counting assembly over a period of time optimal for the particular counting assembly used. All procedures should be performed in replicate to obtain the greatest accuracy.

USP REFERENCE STANDARD 〈11〉

USP Cyanocobalamin RS.

CYANOCOBALAMIN TRACER REAGENT

Dilute an accurately measured volume of a solution of radioactive cyanocobalamin* with water to yield a solution having a radioactivity between 500 and 5000 counts per minute per mL. Add 1 drop of cresol per L of solution prepared, and store in a refrigerator.

Standardization

Prepare a solution of a weighed quantity of USP Cyanocobalamin RS in water to contain 20 to 50 µg per mL. Perform the entire assay on a 10.0-mL portion of this solution, proceeding as directed under *Assay Preparation*, beginning with "Add water to make a measured volume."

* A solution of cyanocobalamin made radioactive by the incorporation of ^{60}Co is available from Merck and Co., Inc., Rahway, NJ 07065.

CRESOL–CARBON TETRACHLORIDE SOLUTION

Mix equal volumes of carbon tetrachloride and freshly distilled cresol.

PHOSPHATE–CYANIDE SOLUTION

Dissolve 100 mg of potassium cyanide in 1000 mL of a saturated solution of dibasic sodium phosphate, and mix.

BUTANOL-BENZALKONIUM CHLORIDE SOLUTION

Dilute benzalkonium chloride solution (17 in 100) with water (3:1), and mix with 36 volumes of butyl alcohol.

ALUMINA-RESIN COLUMN

Place a pledget of glass wool in the bottom of a constricted glass tube such as a 50-mL buret. With the tube held in an upright position, add a volume of a slurry of ion-exchange resin (see in the section *Reagents, Indicators, and Solutions*), in water, sufficient to give a column of settled resin 7 cm in height. When the solid has settled somewhat, allow the water to drain so that there is only 1 cm of liquid above the resin column, and tamp the resin lightly. Then add a volume of a slurry of anhydrous alumina (not acid-washed) in water sufficient to increase the height of the settled column to 10 cm, and allow the water to drain to about 1 cm from the top of the alumina. Add a pledget of glass wool, and wash the column, using a total of 50 mL of water, and again drain to within 1 cm of the top of the column. Prepare a fresh column for each determination.

ASSAY PREPARATION

Transfer to a beaker a weighed quantity or measured volume of the preparation to be assayed, equivalent in vitamin B_{12} activity to that of 200 to 500 µg of cyanocobalamin. Add water to make a measured volume of not less than 25 mL, then add 5.0 mL of *Cyanocobalamin Tracer Reagent*. Add, while working *under a hood*, 5 mg of sodium nitrite and 2 mg of potassium cyanide for each mL of the resulting solution. Adjust the solution with diluted hydrochloric acid to a pH of approximately 4, and heat on a steam bath for 15 minutes. Cool, and adjust the solution with 1 N sodium hydroxide to a pH between 7.6 and 8.0. Centrifuge or filter to remove any undissolved solids.

PROCEDURE

Transfer the *Assay Preparation* to a 250-mL centrifuge bottle, add 10 mL of *Cresol–Carbon Tetrachloride Solution*, suitably close the bottle with a glass, polyethylene, or foil-wrapped rubber stopper, shake vigorously for 2 to 5 minutes, and centrifuge. Remove and save the lower, solvent layer. Repeat the extraction using a 5-mL portion of *Cresol–Carbon Tetrachloride Solution*, and combine the lower, solvent-layer extracts in a centrifuge bottle or separator of 50- to 100-mL capacity.

Wash the combined extracts with successive 10-mL portions of 5 N sulfuric acid until the last washing is practically colorless (two washings usually suffice). During each washing, shake for 2 to 5 minutes, allow the layers to separate, centrifuge, if necessary, and discard the acid layer. Wash further with two successive 10-mL portions of *Phosphate–Cyanide Solution*. Finally, wash with 10 mL of water. Discard all of the washings.

To the washed extract add 30 mL of a mixture of *Butanol-Benzalkonium Chloride Solution* and carbon tetrachloride (2:1). Extract with two 5-mL portions of water, each time shaking vigorously for 1 minute, centrifuging, and removing and saving the upper, aqueous layer.

Pass the combined aqueous extracts through the *Alumina-Resin Column* at a rate of about 1 mL per minute, maintaining a 1-cm layer of liquid on the head of the column by adding water as needed. Discard as much of the forerun as is colorless (usually about 5 mL), and collect the colored eluate (usually about 10 mL) in a 50-mL centrifuge tube or separator containing 500 µL of diluted acetic acid. Extract the eluate by shaking for 2 to 5 minutes with 5 mL of *Cresol–Carbon Tetrachloride Solution*, and discard the upper, aqueous layer. To the extract add 5.0 mL of water, 5 mL of carbon tetrachloride, and 10 mL of butyl alcohol. Shake, allow to separate until the upper layer is clear, and remove the upper, aqueous layer.

Determine the absorbances of the aqueous extract, in a 1-cm cell, at 361 nm and 550 nm, with a suitable spectrophotometer, using a tungsten light source. Make the 361-nm reading using a filter capable of reducing stray light. Calculate the ratio A_{361}/A_{550}: the purity of the aqueous extract is acceptable if the ratio is between 3.10 and 3.40. If a ratio outside this range is observed, purify the aqueous extract by repeating the extraction cycle, proceeding as directed in the foregoing paragraph.

If an acceptable absorbance ratio is observed in the aqueous extract, determine the radioactivity, in counts per minute, using a suitable counter over a period optimal for the particular counting assembly used. Average the results, and correct the average for the observed background radioactivity determined over two or more 30-minute periods.

CALCULATION

Calculate the cobalamin content, expressed in µg of cyanocobalamin, of the portion taken for assay by the formula:

$$R(C_S/C_U)(A_U/A_S)$$

in which R is the quantity, in µg, of cyanocobalamin in the portion of the standard solution taken; C_S and C_U are the corrected average radioactivity values, expressed in counts per minute per mL, of the standard and assay solutions, respectively; and A_U and A_S are the absorbances determined at 361 nm of the assay and standard solutions, respectively.

⟨381⟩ ELASTOMERIC CLOSURES FOR INJECTIONS

INTRODUCTION

Elastomeric closures for containers used in the types of preparations defined in the general test chapter *Injections and Implanted Drug Products* ⟨1⟩ are made of materials obtained by vulcanization (cross-linking) polymerization, polyaddition, or polycondensation of macromolecular organic substances (elastomers). Closure formulations contain natural or synthetic elastomers and inorganic and organic additives to aid or control vulcanization, impart physical and chemical properties or color, or stabilize the closure formulation.

This chapter applies to closures used for long-term storage of preparations defined in the general test chapter *Packaging and Storage Requirements* ⟨659⟩, *Injection Packaging*. Such closures are typically used as part of a vial, bottle, or pre-fill syringe package system.

This chapter applies to closures formulated with natural or synthetic elastomeric substances. This chapter does not apply to closures made from silicone elastomer; however, it does apply to closures treated with silicone (e.g., Dimethicone, *NF*). When performing the tests in this chapter, it is not required that closures be treated with silicone, although there is no restriction prohibiting the use of siliconized closures.

This chapter also applies to closures coated with other lubricious materials (e.g., materials chemically or mechanically bonded to the closure) that are not intended to, and in fact do not provide, a barrier to the base elastomer. When performing the tests, closures with lubricious nonbarrier coatings are to be tested in their coated state.

The following comments relate solely to closures laminated or coated with materials intended to provide, or in fact function as, a barrier to the base elastomer (e.g., PTFE or lacquer coatings). It is not permissible to use a barrier material in an attempt to change a closure that does not meet compendial requirements to one that does conform. Therefore, all *Physicochemical Tests* apply to the base formula of such closures, as well as to the coated or laminated closure. To obtain *Physicochemical Tests* results, the tests are to be performed on uncoated or nonlaminated closures of the same elastomeric compound, as well as to the laminated or coated closure. The *Functionality Tests* apply to and are to be performed using the laminated or coated elastomeric closure. *Biological Tests* apply to the lamination or coating material, as well as to the base formula. *Biological Tests* may be performed on the laminated or coated closure, or they may be performed on the laminate/coating material and the uncoated or nonlaminated closures of the same elastomeric compound. In the latter case, the results are to be reported separately. The base formula used for physicochemical or biological tests intended to support the compendial compliance of a barrier-coated closure should be similar to the corresponding coated closure in configuration and size.

For all *Nephelometry, Turbidimetry, and Visual Comparison* ⟨855⟩ tests performed on any closure type, it is important to document the closure being tested, including a full description of the elastomer, and any lubrication, coating, laminations, or treatments applied.

This chapter states test limits for Type I and Type II elastomeric closures. Type I closures are typically used for aqueous preparations. Type II closures are typically intended for nonaqueous preparations and are those which, having properties optimized for special uses, may not meet all requirements listed for Type I closures because of physical configuration, material of construction, or both. If a closure fails to meet one or more of the Type I test requirements, but still meets the Type II requirements for the test(s), the closure is assigned a final classification of Type II. All elastomeric closures suitable for use with injectable preparations must comply with either Type I or Type II test limits. However, this specification is not intended to serve as the sole evaluation criteria for the selection of such closures.

It is appropriate to use this chapter when identifying elastomeric closures that might be acceptable for use with injectable preparations on the basis of their biological reactivity, their aqueous extract physicochemical properties, and their functionality.

The following closure evaluation requirements are beyond the scope of this chapter:

— The establishment of closure identification tests and specifications
— The verification of closure–product physicochemical compatibility
— The identification and safety determination of closure leachables found in the packaged product
— The verification of packaged product closure functionality under actual storage and use conditions

The manufacturer of the injectable product (the end user) must obtain from the closure supplier an assurance that the composition of the closure does not vary and that it is the same as that of the closure used during compatibility testing. When the supplier informs the end user of changes in the composition, compatibility testing must be repeated, totally or partly, depending on the nature of the changes. Closures must be properly stored, cleaned for removal of environmental contaminants and endotoxins, and, for aseptic processes, sterilized prior to use in packaging injectable products.

CHARACTERISTICS

Elastomeric closures are translucent or opaque and have no characteristic color, the latter depending on the additives used. They are homogeneous and practically free from flash and adventitious materials (e.g., fibers, foreign particles, and waste rubber.)

IDENTIFICATION

Closures are made of a wide variety of elastomeric materials and optional polymeric coatings. For this reason, it is beyond the scope of this chapter to specify identification tests that encompass all possible closure presentations. However, it is the responsibility of the closure supplier and the injectable product manufacturer (the end user) to verify the closure elastomeric formulation and any coating or laminate materials used according to suitable identification tests. Examples of some of the analytical test methodologies that may be used include specific gravity, percentage of ash analysis, sulfur content determination, FTIR-ATR test, thin-layer chromatography of an extract, UV absorption spectrophotometry of an extract, or IR absorption spectrophotometry of a pyrolysate.

TEST PROCEDURES

Elastomeric closures shall conform to biological, physicochemical, and functionality requirements both as they are shipped by the closure supplier to the injectable product manufacturer (the end user), and in their final ready-to-use state by the end user.

For those elastomeric closures processed by the supplier prior to distribution to the end user, the supplier shall demonstrate compendial conformance of closures exposed to such processing and/or sterilization steps. Similarly, if elastomeric closures received by the end user are subsequently processed or sterilized, the end user is responsible for demonstrating the continued conformance of closures to compendial requirements subsequent to such processing and/or sterilization conditions (i.e., in their ready-to-use state). This is especially important if closures shall be exposed to processes or conditions that may significantly impact the biological, physicochemical, or functionality characteristics of the closure (e.g., gamma irradiation).

For closures that are normally lubricated with silicone prior to use, it is permissible to perform physicochemical testing on nonlubricated closures, in order to avoid potential method interference and/or difficulties in interpreting test results. For closures supplied with other lubricious nonbarrier coatings, all tests are to be performed using the coated closure.

For closures coated or laminated with coatings intended to provide a barrier function (e.g., PTFE or lacquer coatings), physicochemical compendial tests apply to the uncoated base elastomer, as well as to the coated closure. In this case, suppliers are responsible for demonstrating physicochemical compendial compliance of the coated closure, as well as of the uncoated closure, processed or treated in a manner simulating conditions typically followed by the supplier for such coated closures prior to shipment to the end user. The uncoated closure subject to physicochemical tests should be similar to the corresponding coated closure in size and configuration. End users of coated closures are also responsible for demonstrating the continued physicochemical compendial conformance of the coated closure, processed or treated in a manner simulating conditions typically employed by the end user prior to use.

In all cases, it is appropriate to document all conditions of closure processing, pretreatment, sterilization, or lubrication when reporting test results.

Table 1 summarizes the testing requirements of closures, and the responsibilities of the supplier and the end user.

Table 1

Closure Types (As Supplied or Used)	Test Requirements		
	Physicochemical Tests	**Functionality Tests**	**Biological Tests**
Closure with or without Silicone Coating	• Tests are to be performed.	• Tests are to be performed.	• Tests are to be performed.
	• Silicone use is optional.	• Silicone use is optional.	• Silicone use is optional.
	• Responsibility: supplier and end user	• Responsibility: supplier and end user	• Responsibility: supplier and end user
Closures with Lubricious Coating (Nonbarrier Material; Not Silicone)	• Tests are to be performed on coated closures.	• Tests are to be performed on coated closures.	• Tests are to be performed on coated closures.
	• Responsibility: supplier and end user	• Responsibility: supplier and end user	• Responsibility: supplier and end user

Table 1 *(Continued)*

Closure Types (As Supplied or Used)	Test Requirements: Physicochemical Tests	Test Requirements: Functionality Tests	Test Requirements: Biological Tests
	• Tests are to be performed on coated closures.	• Tests are to be performed on coated closures.	• Tests are to be performed on coated closures.
	• Responsibility: supplier and end user		OR:
	AND: • Tests are to be performed on uncoated closures (base formula).	• Responsibility: supplier and end user	• Tests are to be performed on uncoated closures (base formula) and the laminate/coating material (report results separately).
Closures with Barrier Coating	• Responsibility: supplier		• Responsibility: supplier and end user

BIOLOGICAL TESTS

Two stages of testing are indicated. The first stage is the performance of an in vitro test procedure as described in general test chapter *Biological Reactivity Tests, In Vitro* 〈87〉. Materials that do not meet the requirements of the in vitro test are subjected to the second stage of testing, which is the performance of the in vivo tests, *Systemic Injection Test and Intracutaneous Test*, according to the procedures set forth in the general test chapter *Biological Reactivity Tests, In Vivo* 〈88〉. Materials that meet the requirements of the in vitro test are not required to undergo in vivo testing.

Type I and Type II closures must both conform to the requirements of either the in vitro or the in vivo biological reactivity tests. [NOTE—Also see the general information chapter *The Biocompatibility of Material Used in Drug Containers, Medical Devices, and Implants* 〈1031〉.]

PHYSICOCHEMICAL TESTS

Preparation of Solution S

Place whole, uncut closures corresponding to a surface area of 100 ± 10 cm² into a suitable glass container. Cover the closures with 200 mL of Purified Water or Water for Injection. If it is not possible to achieve the prescribed closure surface area (100 ± 10 cm²) using uncut closures, select the number of closures that will most closely approximate 100 cm², and adjust the volume of water used to the equivalent of 2 mL per each 1 cm² of actual closure surface area used. Boil for 5 minutes, and rinse five times with cold Purified Water or Water for Injection.

Place the washed closures into a Type I glass wide-necked flask (see *Containers—Glass* 〈660〉), add the same quantity of Purified Water or Water for Injection initially added to the closures, and weigh. Cover the mouth of the flask with a Type I glass beaker. Heat in an autoclave so that a temperature of 121 ± 2° is reached within 20 to 30 minutes, and maintain this temperature for 30 minutes. Cool to room temperature over a period of about 30 minutes. Add Purified Water or Water for Injection to bring it up to the original mass. Shake, and immediately decant and collect the solution. [NOTE—This solution must be shaken before being used in each of the tests.]

Preparation of Blank

Prepare a blank solution similarly, using 200 mL of Purified Water or Water for Injection omitting the closures.

APPEARANCE OF SOLUTION (TURBIDITY/OPALESCENCE AND COLOR)

Determination of Turbidity (Opalescence)

NOTE—The determination of turbidity may be performed by visual comparison (*Procedure A*), or instrumentally using a suitable ratio turbidimeter (*Procedure B*). For a discussion of turbidimetry, see *Nephelometry, Turbidimetry, and Visual Comparison* 〈855〉. Instrumental assessment of clarity provides a more discriminatory test that does not depend on the visual acuity of the analyst.

Hydrazine Sulfate Solution—Dissolve 1.0 g of hydrazine sulfate in water and dilute with water to 100.0 mL. Allow to stand for 4 to 6 hours.

Hexamethylenetetramine Solution—Dissolve 2.5 g of hexamethylenetetramine in 25.0 mL of water in a 100-mL glass-stoppered flask.

Opalescence Stock Suspension—Add 25.0 mL of *Hydrazine Sulfate Solution* to the *Hexamethylenetetramine Solution* in the flask. Mix, and allow to stand for 24 hours. This suspension is stable for 2 months, provided it is stored in a glass container free from surface defects. The suspension must not adhere to the glass and must be well mixed before use.

Opalescence Standard Suspension—Prepare a suspension by diluting 15.0 mL of the *Opalescence Stock Suspension* with water to 1000.0 mL. *Opalescence Standard Suspension* is stable for about 24 hours after preparation.

Reference Suspensions—Prepare according to *Table 2*. Mix and shake before use. [NOTE—Stabilized formazin suspensions that can be used to prepare stable, diluted turbidity standards are available commercially and may be used after comparison with the standards prepared as described.]

Table 2

	Reference Suspension A	Reference Suspension B	Reference Suspension C	Reference Suspension D
Standard of Opalescence	5.0 mL	10.0 mL	30.0 mL	50.0 mL
Water	95.0 mL	90.0 mL	70.0 mL	50.0 mL
Nephelometric Turbidity Units	3 NTU	6 NTU	18 NTU	30 NTU

Procedure A: Visual Comparison—Use identical test tubes made of colorless, transparent, neutral glass with a flat base and an internal diameter of 15 to 25 mm. Fill one tube to a depth of 40 mm with *Solution S,* one tube to the same depth with water, and four others to the same depth with *Reference Suspensions A, B, C,* and *D*. Compare the solutions in diffuse daylight 5 minutes after preparation of the *Reference Suspensions,* viewing vertically against a black background. The light conditions shall be such that *Reference Suspension A* can be readily distinguished from water and that *Reference Suspension B* can be readily distinguished from *Reference Suspension A*.

REQUIREMENT—*Solution S* is not more opalescent than *Reference Suspension B* for Type I closures, and not more opalescent than *Reference Suspension C* for Type II closures. *Solution S* is considered clear if its clarity is the same as that of water when examined as described above, or if its opalescence is not more pronounced than that of *Reference Suspension A* (refer to *Table 3*).

Procedure B: Instrumental Comparison—Measure the turbidity of the *Reference Suspensions* in a suitable calibrated turbidimeter (see ⟨855⟩). The blank should be run and the results corrected for the blank. *Reference Suspensions A, B, C,* and *D* represent 3, 6, 18, and 30 Nephelometric Turbidity Units (NTU), respectively. Measure the turbidity of *Solution S* using the calibrated turbidimeter.

REQUIREMENT—The turbidity of *Solution S* is not greater than that for *Reference Suspension B* (6 NTU FTU) for Type I closures, and is not greater than that for *Reference Suspension C* (18 NTU FTU) for Type II closures (refer to *Table 3*).

Table 3

Opalescence Requirements	Comparison Method Procedure A (Visual)	Procedure B (Instrumental)
Type I closures	No more opalescent than Suspension B	No more than 6 NTU
Type II closures	No more opalescent than Suspension C	No more than 18 NTU

Determination of Color

Color Standard—Prepare a solution by diluting 3.0 mL of *Matching Fluid O* (see *Color and Achromicity* ⟨631⟩) with 97.0 mL of diluted hydrochloric acid.

Procedure—Use identical tubes made of colorless, transparent, neutral glass with a flat base and an internal diameter of 15 to 25 mm. Fill one tube to a depth of 40 mm with *Solution S,* and the second with the *Color Standard*. Compare the liquids in diffuse daylight, viewing vertically against a white background.

Requirement—*Solution S* is not more intensely colored than the *Color Standard*.

Acidity or Alkalinity

Bromothymol Blue Solution—Dissolve 50 mg of bromothymol blue in a mixture of 4 mL of 0.02 M sodium hydroxide and 20 mL of alcohol. Dilute with water to 100 mL.

Procedure—To 20 mL of *Solution S* add 0.1 mL of *Bromothymol Blue Solution*. If the solution is yellow, titrate with 0.01 N sodium hydroxide until a blue endpoint is reached. If the solution is blue, titrate with 0.01 N hydrochloric acid until a yellow endpoint is reached. If the solution is green, it is neutral and no titration is required.

Blank Correction—Test 20 mL of *Blank* similarly. Correct the results obtained for *Solution S* by subtracting or adding the volume of titrant required for the *Blank,* as appropriate. (*Reference Titrimetry* ⟨541⟩.)

Requirement—Not more than 0.3 mL of 0.01 N sodium hydroxide produces a blue color, or not more than 0.8 mL of 0.01 N hydrochloric acid produces a yellow color, or no titration is required.

Absorbance

Procedure—[NOTE—Perform this test within 5 hours of preparing *Solution S*.] Pass *Solution S* through a 0.45-µm pore size filter, discarding the first few mL of filtrate. Measure the absorbance of the filtrate at wavelengths between 220 and 360 nm in

a 1-cm cell using the blank in a matched cell in the reference beam. If dilution of the filtrate is required before measurement of the absorbance, correct the test results for the dilution.

Requirement—The absorbances at these wavelengths do not exceed 0.2 for Type I closures or 4.0 for Type II closures.

Reducing Substances

Procedure— [NOTE—Perform this test within 4 hours of preparing *Solution S*.] To 20.0 mL of *Solution S* add 1 mL of diluted sulfuric acid and 20.0 mL of 0.002 M potassium permanganate. Boil for 3 minutes. Cool, add 1 g of potassium iodide, and titrate immediately with 0.01 M sodium thiosulfate, using 0.25 mL of starch solution TS as the indicator. Perform a titration using 20.0 mL of blank and note the difference in volume of 0.01 M sodium thiosulfate required.

Requirement—The difference between the titration volumes is not greater than 3.0 mL for Type I closures and not greater than 7.0 mL for Type II closures.

Heavy Metals

Procedure—Proceed as directed for *Method I* under *Heavy Metals* 〈231〉. Prepare the *Test Preparation* using 10.0 mL of *Solution S*.

Requirement—*Solution S* contains not more than 2 ppm of heavy metals as lead.

Extractable Zinc

Test Solution—Prepare a *Test Solution* by diluting 10.0 mL of *Solution S* to 100 mL with 0.1 N hydrochloric acid. Prepare a test blank similarly, using the *Blank* for *Solution S*.

Zinc Standard Solution—Prepare a solution (10 ppm Zn) by dissolving zinc sulfate in 0.1 N hydrochloric acid.

Reference Solutions—Prepare not fewer than three *Reference Solutions* by diluting the *Zinc Standard Solution* with 0.1 N hydrochloric acid. The concentrations of zinc in these *Reference Solutions* are to span the expected limit of the *Test Solution*.

Procedure—Use a suitable atomic absorption spectrophotometer (see *Atomic Absorption Spectroscopy* 〈852〉) equipped with a zinc hollow-cathode lamp and an air–acetylene flame. An alternative procedure such as an appropriately validated inductively coupled plasma analysis (ICP) may be used.

Test each of the *Reference Solutions* at the zinc emission line of 213.9 nm at least three times. Record the steady readings. Rinse the apparatus with the test blank solution each time, to ensure that the reading returns to initial blank value. Prepare a calibration curve from the mean of the readings obtained for each *Reference Solution*. Record the absorbance of the *Test Solution*. Determine the ppm zinc concentration of the *Test Solution* using the calibration curve.

Requirement—*Solution S* contains not more than 5 ppm of extractable zinc.

Ammonium

Alkaline Potassium Tetraiodomercurate Solution—Prepare a 100 mL solution containing 11 g of potassium iodide and 15 g of mercuric iodide in water. Immediately before use, mix 1 volume of this solution with an equal volume of a 250 g per L solution of sodium hydroxide.

Test Solution—Dilute 5 mL of *Solution S* to 14 mL with water. Make alkaline if necessary by adding 1 N sodium hydroxide, and dilute with water to 15 mL. Add 0.3 mL of *Alkaline Potassium Tetraiodomercurate Solution*, and close the container.

Ammonium Standard Solution—Prepare a solution of ammonium chloride in water (1 ppm NH_4). Mix 10 mL of the 1 ppm ammonium chloride solution with 5 mL water and 0.3 mL of *Alkaline Potassium Tetraiodomercurate Solution*. Close the container.

Requirement—After 5 minutes, any yellow color in the *Test Solution* is no darker than the *Ammonium Standard Solution* (no more than 2 ppm of NH_4 in *Solution S*).

Volatile Sulfides

Procedure—Place closures, cut if necessary, with a total surface area of 20 ± 2 cm² in a 100-mL flask, and add 50 mL of a 20 g per L citric acid solution. In the same manner and at the same time, prepare a control solution in a separate 100-mL flask by dissolving 0.154 mg of sodium sulfide in 50 mL of a 20 g per L citric acid solution. Place a piece of lead acetate paper over the mouth of each flask, and hold the paper in position by placing over it an inverted weighing bottle. Heat the flasks in an autoclave at 121 ± 2° for 30 minutes.

Requirement—Any black stain on the paper produced by the test solution is not more intense than that produced by the control substance.

FUNCTIONALITY TESTS

NOTE—Samples treated as described for preparation of *Solution S* and air dried should be used for *Functionality Tests* of *Penetrability, Fragmentation,* and *Self-Sealing Capacity. Functionality Tests* are performed on closures intended to be pierced by a hypodermic needle. The *Self-Sealing Capacity* test is required only for closures intended for multiple-dose containers. The needle specified for each test is a lubricated long bevel (bevel angle 12 ± 2°) hypodermic needle[1].

Penetrability

Procedure—Fill 10 suitable vials to the nominal volume with water, fit the closures to be examined, and secure with a cap. Using a new hypodermic needle as described above for each closure, pierce the closure with the needle perpendicular to the surface.

Requirement—The force for piercing is no greater than 10 N (1 kgf) for each closure, determined with an accuracy of ±0.25 N (25 gf).

Fragmentation

Closures for Liquid Preparations—Fill 12 clean vials with water to 4 mL less than the nominal capacity. Fit the closures to be examined, secure with a cap, and allow to stand for 16 hours.

Closures for Dry Preparations—Fit closures to be examined into 12 clean vials, and secure each with a cap.

Procedure—Using a hypodermic needle as described above fitted to a clean syringe, inject into each vial 1 mL of water while removing 1 mL of air. Repeat this procedure four times for each closure, piercing each time at a different site. Use a new needle for each closure, checking that it is not blunted during the test. Filter the total volume of liquid in all the vials through a single filter with a nominal pore size no greater than 0.5 µm. Count the rubber fragments on the surface of the filter visible to the naked eye.

Requirement—There are no more than five fragments visible. This limit is based on the assumption that fragments with a diameter >50 µm are visible to the naked eye. In case of doubt or dispute, the particles are examined microscopically to verify their nature and size.

Self-Sealing Capacity

Procedure—Fill 10 suitable vials with water to the nominal volume. Fit the closures that are to be examined, and cap. Using a new hypodermic needle as described above for each closure, pierce each closure 10 times, piercing each time at a different site. Immerse the 10 vials in a solution of 0.1% (1 g per L) methylene blue, and reduce the external pressure by 27 kPa for 10 minutes. Restore to atmospheric pressure, and leave the vials immersed for 30 minutes. Rinse the outside of the vials.

Requirement—None of the vials contain any trace of blue solution.

〈391〉 EPINEPHRINE ASSAY

ASSAY

Ferro-citrate solution: On the day needed, dissolve 1.5 g of ferrous sulfate in 200 mL of water to which have been added 1.0 mL of dilute hydrochloric acid (1 in 12) and 1.0 g of sodium bisulfite. Dissolve 500 mg of sodium citrate in 10 mL of this solution, and mix.

Buffer solution: In a 50-mL volumetric flask mix 4.2 g of sodium bicarbonate, 5.0 g of potassium bicarbonate, and 18 mL of water (not all of the solids will dissolve at this stage). To another 18 mL of water add 3.75 g of aminoacetic acid and 1.7 mL of 6 N ammonium hydroxide, mix to dissolve, and transfer this solution to the 50-mL volumetric flask containing the other mixture. Dilute with water to volume, and mix until solution is complete.

Standard preparation: Transfer about 18 mg of USP Epinephrine Bitartrate RS, accurately weighed, to a 100-mL volumetric flask with the aid of 20 mL of sodium bisulfite solution (1 in 50), dilute with water to volume, and mix. Transfer 5.0 mL of this solution to a 50-mL volumetric flask, dilute with sodium bisulfite solution (1 in 500) to volume, and mix. [NOTE—Make the final dilution when the assay is carried out.] The concentration of USP Epinephrine Bitartrate RS in the *Standard preparation* is about 18 µg per mL.

Assay preparation: Transfer to a 50-mL volumetric flask an accurately measured volume of the Injection under assay, equivalent to about 500 µg of epinephrine, dilute with sodium bisulfite solution (1 in 500) to volume, if necessary, and mix. [NOTE—The final concentration of sodium bisulfite is in the range of 1 to 3 mg per mL, any bisulfite present in the Injection under assay being taken into consideration.]

[1] Refer to ISO 7864, Sterile hypodermic needles for single use with an external diameter of 0.8 mm (21 Gauge).

General Chapters

Procedure: Into three 50-mL glass-stoppered conical flasks transfer, separately, 20.0-mL aliquots of the *Standard preparation*, the *Assay preparation*, and sodium bisulfite solution (1 in 500) to provide the blank. To each flask add 200 µL of *Ferrocitrate solution* and 2.0 mL of *Buffer solution*, mix, and allow the solutions to stand for 30 minutes. Determine the absorbances of the solutions in 5-cm cells at the wavelength of maximum absorbance at about 530 nm, with a suitable spectrophotometer, using the blank to set the instrument.

Calculate the quantity, in mg, of epinephrine ($C_9H_{13}NO_3$) in each mL of the Injection taken by the formula, in which 183.21 and 333.30 are the molecular weights of epinephrine and epinephrine bitartrate, respectively:

$$\text{Result} = (183.21/333.30)(0.05C/V)(A_U/A_S)$$

C = concentration of USP Epinephrine Bitartrate RS in the *Standard preparation* (µg/mL)
V = volume of Injection taken (mL)
A_U = absorbance of the *Assay preparation*
A_S = absorbance of the *Standard preparation*

ADDITIONAL REQUIREMENTS

- **USP Reference Standards 〈11〉**
  USP Epinephrine Bitartrate RS

〈401〉 FATS AND FIXED OILS

The following definitions and general procedures apply to fats, fixed oils, waxes, resins, balsalms, and similar substances.

Preparation of Specimen

If a specimen of oil shows turbidity owing to separated stearin, warm the container in a water bath at 50° until the oil is clear, or if the oil does not become clear on warming, pass it through dry filter paper in a funnel contained in a hot-water jacket. Mix thoroughly, and weigh at one time as many portions as are needed for the various determinations, preferably using a bottle that has a pipet dropper or a weighing buret. If the specimen is solid at room temperature, keep it melted until the desired portions of specimen are withdrawn.

PROCEDURES

- **Specific Gravity:** Determine the specific gravity of a fat or oil as directed in *Specific Gravity* 〈841〉.
- **Melting Temperature:** Determine the melting temperature as directed for *Class II* substances (see *Melting Range or Temperature* 〈741〉).
- **Acid Value (Free Fatty Acids)**

The acidity of fats and fixed oils in this pharmacopeia may be expressed as the number of mL of 0.1 N alkali required to neutralize the free acids in 10.0 g of substance. Acidity frequently is expressed as the Acid Value, which is the number of mg of potassium hydroxide required to neutralize the free acids in 1.0 g of the substance. Unless directed otherwise in the individual monograph, use *Method I*.

Method I

Procedure: Unless directed otherwise, dissolve about 10.0 g of the substance, accurately weighed, in 50 mL of a mixture of equal volumes of alcohol and ether (which has been neutralized to phenolphthalein with 0.1 N potassium hydroxide or 0.1 N sodium hydroxide, unless otherwise specified) contained in a flask. If the test specimen does not dissolve in the cold solvent, connect the flask with a suitable condenser and warm slowly, with frequent shaking, until the specimen dissolves. Add 1 mL of phenolphthalein TS, and titrate with 0.1 N potassium hydroxide VS or 0.1 N sodium hydroxide VS until the solution remains faintly pink after shaking for 30 s. Calculate either the Acid Value or the volume of 0.1 N alkali required to neutralize 10.0 g of specimen (free fatty acids), whichever is appropriate. Calculate the Acid Value:

$$\text{Result} = (M_r \times V) \times (N/W)$$

M_r = molecular weight of potassium hydroxide, 56.11
V = volume (mL)
N = normality of the potassium hydroxide solution or the sodium hydroxide solution
W = weight of the sample taken (g)

If the volume of 0.1 N potassium hydroxide VS or 0.1 N sodium hydroxide VS required for the titration is less than 2 mL, a more dilute titrant may be used, or the sample size may be adjusted accordingly. The results may be expressed in terms of the volume of titrant used or in terms of the equivalent volume of 0.1 N potassium hydroxide or 0.1 N sodium hydroxide.

If the oil has been saturated with carbon dioxide for the purpose of preservation, gently reflux the alcohol–ether solution for 10 min before titration. The oil may be freed from carbon dioxide also by exposing it in a shallow dish in a vacuum desiccator for 24 h before weighing the test specimens.

Method II

Procedure: Prepare 125 mL of a solvent mixture consisting of equal volumes of isopropyl alcohol and toluene. Before use, add 2 mL of a 1% solution of phenolphthalein in isopropyl alcohol to the 125-mL mixture, and neutralize with alkali to a faint but permanent pink color. Accurately weigh the appropriate amount of well-mixed liquid sample indicated in *Table 1*, and dissolve it in the neutralized solvent mixture. If the test specimen does not dissolve in the cold solvent, connect the flask with a suitable condenser and warm slowly, with frequent shaking, until the specimen dissolves. Shake vigorously while titrating with 0.1 N potassium hydroxide VS or 0.1 N sodium hydroxide VS to the first permanent pink of the same intensity as that of the neutralized solvent before mixing with the sample. Calculate the Acid Value as indicated in *Method I*.

Table 1

Acid Value	Sample Weight (g)
0–1	20
1–4	10
4–15	2.5
15–74.9	0.5
≥75.0	0.1

• **Ester Value**

The Ester Value is the number of mg of potassium hydroxide required to saponify the esters in 1.0 g of the substance. If the Saponification Value and the Acid Value have been determined, the difference between these two represents the Ester Value, i.e., Ester Value = Saponification Value − Acid Value.

Procedure: Place 1.5–2 g of the substance, accurately weighed, in a tared, 250-mL flask, add 20–30 mL of neutralized alcohol, and shake. Add 1 mL of phenolphthalein TS, and titrate with 0.5 N alcoholic potassium hydroxide VS until the free acid is neutralized. Add 25.0 mL of 0.5 N alcoholic potassium hydroxide VS, and proceed as directed in *Saponification Value*, beginning with "Heat the flask" and omitting the further addition of phenolphthalein TS. Calculate the Ester Value:

$$\mathrm{Result} = [M_r \times (V_B - V_T) \times N]/W$$

M_r = molecular weight of potassium hydroxide, 56.11
V_B = volume of 0.5 N hydrochloric acid consumed in the blank test (mL)
V_T = volume of 0.5 N hydrochloric acid consumed in the actual test (mL)
N = exact normality of the hydrochloric acid
W = weight of the substance taken for the test (g)

• **Hydroxyl Value**

The Hydroxyl Value is the number of mg of potassium hydroxide equivalent to the hydroxyl content of 1.0 g of the substance.

Pyridine–acetic anhydride reagent: Just before use, mix 3 volumes of freshly opened or freshly distilled pyridine with 1 volume of freshly opened or freshly distilled acetic anhydride.

Procedure: Transfer a quantity of the substance, determined by reference to *Table 2* and accurately weighed, to a glass-stoppered, 250-mL conical flask, and add 5.0 mL of *Pyridine–acetic anhydride reagent*. Transfer 5.0 mL of *Pyridine–acetic anhydride reagent* to a second glass-stoppered, 250-mL conical flask to provide the reagent blank. Fit both flasks with suitable glass-jointed reflux condensers, heat on a steam bath for 1 h, add 10 mL of water through each condenser, and heat on the steam bath for 10 min more. Cool, and to each add 25 mL of butyl alcohol, previously neutralized to phenolphthalein TS with 0.5 N alcoholic potassium hydroxide, by pouring 15 mL through each condenser and, after removing the condensers, washing the sides of both flasks with the remaining 10-mL portions. To each flask add 1 mL of phenolphthalein TS, and titrate with 0.5 N alcoholic potassium hydroxide VS, recording the volume, in mL, consumed by the residual acid in the test solution as *T* and that consumed by the blank as *B*. In a 125-mL conical flask, mix about 10 g of the substance, accurately weighed, with 10 mL of freshly distilled pyridine, previously neutralized to phenolphthalein TS, add 1 mL of phenolphthalein TS, and titrate with 0.5 N alcoholic potassium hydroxide VS, recording the volume, in mL, consumed by the free acid in the test specimen as *A*. Calculate the Hydroxyl Value:

$$\mathrm{Result} = [(M_r \times N)/W] \times \{B + [(W \times A)/C] - T\}$$

M_r = molecular weight of potassium hydroxide, 56.11
N = exact normality of the alcoholic potassium hydroxide
W = weight of the substances taken for the acetylation (g)
C = weight of the substances taken for the free acid determination (g)

If the Acid Value for the test substance is known, calculate the Hydroxyl Value:

$$\mathrm{Result} = [(M_r \times N)/W] \times (B - T) + \mathrm{Acid\ Value}$$

M_r = molecular weight of potassium hydroxide, 56.11

N = exact normality of the alcoholic potassium hydroxide
W = weight of the substance taken for the acetylation (g)

Table 2

Hydroxyl Value Range	Weight of Test Specimen (g)
0–20	10
20–50	5
50–100	3
100–150	2
150–200	1.5
200–250	1.25
250–300	1.0
300–350	0.75

• **Iodine Value**

The Iodine Value represents the number of g of iodine absorbed, under the prescribed conditions, by 100 g of the substance. Unless otherwise specified in the individual monograph, determine the Iodine Value by *Method I*.

Method I (Hanus method)

Procedure: Transfer an accurately weighed quantity of sample, as determined from *Table 3*, into a 250-mL iodine flask, dissolve it in 10 mL of chloroform, add 25.0 mL of iodobromide TS, insert the stopper in the vessel securely, and allow it to stand for 30 min protected from light, with occasional shaking. Then add, in the order named, 30 mL of potassium iodide TS and 100 mL of water, and titrate the liberated iodine with 0.1 N sodium thiosulfate VS, shaking thoroughly after each addition of thiosulfate. When the iodine color becomes quite pale, add 3 mL of starch TS, and continue the titration with 0.1 N sodium thiosulfate VS until the blue color is discharged. Perform a blank test at the same time with the same quantities of the same reagents and in the same manner (see *Titrimetry* ⟨541⟩, *Residual Titrations*). Calculate the Iodine Value:

$$\text{Result} = [A_r \times (V_B - V_S) \times N]/(10 \times W)$$

A_r = atomic weight of iodine, 126.90
V_B = volume of 0.1 N sodium thiosulfate VS consumed by the blank test (mL)
V_S = volume of 0.1 N sodium thiosulfate VS consumed by the actual test (mL)
N = exact normality of the sodium thiosulfate VS
W = weight of the substance taken for the test (g)

[Note—If more than half of the iodobromide TS is absorbed by the portion of the substance taken, repeat the determination, using a smaller portion of the substance under examination.]

Table 3. Sample Weights

Iodine Value Expected	Weight (g) ±0.1
<5	3.0
5–20	1.0
21–50	0.4
51–100	0.2
101–150	0.13
151–200	0.1

Method II

Potassium iodide solution: Dissolve 10.0 g of potassium iodide in water to make 100 mL. Store in light-resistant containers.

Starch indicator solution: Mix 1 g of soluble starch with sufficient cold water to make a thin paste. Add, while stirring, to 100 mL of boiling water. Mix, and cool. Use only the clear solution.

Procedure: Melt the sample, if it is not already liquid. [Note—The temperature during melting should exceed the melting point of the sample by NMT 10°.] Pass through two pieces of filter paper to remove any solid impurities and the last traces of moisture. The filtration may be performed in an air oven at 100° but should be completed within 5 min ± 30 s. The sample must be absolutely dry. All glassware must be absolutely clean and completely dry. After filtration, allow the filtered sample to achieve a temperature of 68°–71 ± 1° before weighing the sample. Once the sample has achieved a temperature of 68°–71 ± 1°, immediately weigh the sample into a 500-mL iodine flask, using the weights and weighing accuracy noted in the accompanying table. [Note—The weight of the substance must be such that there will be an excess of iodochloride TS of 50%–60% of the amount added, that is, 100%–150% of the amount absorbed.] Add 15 mL of a

General Chapters

fresh mixture of cyclohexane and glacial acetic acid (1:1), and swirl to dissolve the sample. Add 25.0 mL of iodochloride TS, insert the stopper securely in the flask, and swirl to mix. Allow it to stand at 25 ± 5°, protected from light, with occasional shaking, for 1.0 or 2.0 h, depending on the Iodine Value (IV) of the sample: IV < 150, 1.0 h; IV ≥ 150, 2.0 h. Then, within 3 min after the indicated reaction time, add, in the order named, 20 mL of *Potassium iodide solution* and 150 mL of recently boiled and cooled water, and mix. Within 30 min, titrate the liberated iodine with 0.1 N sodium thiosulfate VS, while stirring by mechanical means after each addition of thiosulfate. When the yellow iodine color has almost disappeared, add 1–2 mL of *Starch indicator solution*, and continue the titration with 0.1 N sodium thiosulfate VS until the blue color is discharged. Perform a blank test at the same time with the same quantities of the same reagents and in the same manner (see *Titrimetry* ⟨541⟩, *Residual Titrations*). Calculate the Iodine Value as indicated in *Method I*.

• **Peroxide Value**

The Peroxide Value is the number that expresses, in milliequivalents of active oxygen, the quantity of peroxide contained in 1000 g of the substance. [Note—This test must be performed promptly after sampling to avoid oxidation of the test specimen.]

Procedure: Unless otherwise directed, place about 5 g of the substance, accurately weighed, in a 250-mL conical flask fitted with a ground-glass stopper. Add 30 mL of a mixture of glacial acetic acid and chloroform (3:2), shake to dissolve, and add 0.5 mL of saturated potassium iodide solution. Shake for exactly 1 min, and add 30 mL of water. Titrate with 0.01 N sodium thiosulfate VS, adding the titrant slowly with continuous shaking, until the yellow color is almost discharged. Add 5 mL of starch TS, and continue the titration, shaking vigorously, until the blue color is discharged. Perform a blank determination under the same conditions. [Note—The volume of titrant used in the blank determination must not exceed 0.1 mL.] Calculate the Peroxide Value:

$$\text{Result} = [1000\ (V_T - V_B) \times N]/W$$

V_T = volume of 0.01 N sodium thiosulfate consumed in the actual test (mL)
V_B = volume of 0.01 N sodium thiosulfate consumed in the blank test (mL)
N = exact normality of the sodium thiosulfate solution
W = weight of the substance taken for the test (g)

• **Saponifcation Value**

The Saponification Value is the number of mg of potassium hydroxide required to neutralize the free acids and saponify the esters contained in 1.0 g of the substance.

Procedure: Place 1.5–2 g of the substance in a tared, 250-mL flask, weigh accurately, and add to it 25.0 mL of 0.5 N alcoholic potassium hydroxide. Heat the flask on a steam bath, under a suitable condenser to maintain reflux for 30 min, frequently rotating the contents. [Note—Reflux time can be up to 90 min to ensure complete saponification, depending on the type of ester to be tested.] Then add 1 mL of phenolphthalein TS, and titrate the excess potassium hydroxide with 0.5 N hydrochloric acid VS. Perform a blank determination under the same conditions (see *Titrimetry* ⟨541⟩, *Residual Titrations*). The titration also can be carried out potentiometrically. Calculate the Saponification Value:

$$\text{Result} = [M_r \times (V_B - V_T) \times N]/W$$

M_r = molecular weight of potassium hydroxide, 56.11
V_B = volume of 0.5 N hydrochloric acid consumed in the blank test (mL)
V_T = volume of 0.5 N hydrochloric acid consumed in the actual test (mL)
N = exact normality of the hydrochloric acid
W = weight of the substance taken for the test (g)

If the oil has been saturated with carbon dioxide for the purpose of preservation, expose it in a shallow dish in a vacuum desiccator for 24 h before weighing the test specimens.

• **Unsaponifiable Matter**

The term "unsaponifiable matter" in oils or fats refers to those substances that are not saponifiable by alkali hydroxides but are soluble in the ordinary fat solvents, and to products of saponification that are soluble in such solvents.

Procedure: Transfer about 5.0 g of the oil or fat, accurately weighed, to a 250-mL conical flask, add 50 mL of an alcoholic potassium hydroxide solution prepared by dissolving 12 g of potassium hydroxide in 10 mL of water and diluting this solution with alcohol to 100 mL, and heat the flask on a steam bath under a suitable condenser to maintain reflux for 1 h, swirling frequently. Cool to a temperature below 25°, and transfer the contents of the flask to a separator with a polytetrafluoroethylene stopcock, rinsing the flask with two 50-mL portions of water that are added to the separator (do not use grease on stopcock). Extract with three 100-mL portions of ether, combining the ether extracts in another separator containing 40 mL of water. Gently rotate or shake the separator for a few minutes. [Note—Violent agitation may result in the formation of a difficult-to-separate emulsion.] Allow the mixture to separate, and discard the lower aqueous phase. Wash the ether extract with two additional 40-mL portions of water, and discard the lower aqueous phase. Wash the ether extract successively with a 40-mL portion of potassium hydroxide solution (3 in 100) and a 40-mL portion of water. Repeat this potassium hydroxide solution–water wash sequence three times. Wash the ether extract with 40-mL portions of water until the last washing is not reddened by the addition of 2 drops of phenolphthalein TS. Transfer the ether extract to a tared flask, and rinse the separator with 10 mL of ether, adding the rinsings to the flask. Evaporate the ether on a steam

bath, and add 6 mL of acetone to the residue. Remove the acetone in a current of air, and dry the residue at 105° until successive weighings differ by NMT 1 mg. Calculate the percentage of unsaponifiable matter in the portion of oil or fat taken:

$$\text{Result} = 100 \times (W_R/W_S)$$

W_R = weight of the residue (g)
W_S = weight of the oil or fat taken for the test (g)

Dissolve the residue in 20 mL of alcohol, previously neutralized to the phenolphthalein endpoint, add phenolphthalein TS, and titrate with 0.1 N alcoholic sodium hydroxide VS to the first appearance of a faint pink color that persists for NLT 30 s. If the volume of 0.1 N alcoholic sodium hydroxide required is greater than 0.2 mL, the separation of the layers was incomplete; the residue weighed cannot be considered "unsaponifiable matter," and the test must be repeated.

- **Solidification Temperature of Fatty Acids**

Preparation of the fatty acids: Heat 75 mL of glycerin–potassium hydroxide solution (made by dissolving 25 g of potassium hydroxide in 100 mL of glycerin) in an 800-mL beaker to 150°, and add 50 mL of the clarified fat, melted if necessary. Heat the mixture for 15 min with frequent stirring, but do not allow the temperature to rise above 150°. Saponification is complete when the mixture is homogeneous and no particles cling to the beaker at the meniscus. Pour the contents of the beaker into 500 mL of nearly boiling water in an 800-mL beaker or casserole, add slowly 50 mL of dilute sulfuric acid [made by adding water and sulfuric acid (3:1)], and heat the solution, with frequent stirring, until the fatty acids separate cleanly as a transparent layer. Wash the acids with boiling water until free from sulfuric acid, collect them in a small beaker, place on a steam bath until the water has settled and the fatty acids are clear, filter into a dry beaker while hot, and dry at 105° for 20 min. Place the warm fatty acids in a suitable container, and cool in an ice bath until they congeal.

Test for complete saponification: Place 3 mL of the dry acids in a test tube, and add 15 mL of alcohol. Heat the solution to boiling, and add an equal volume of 6 N ammonium hydroxide. A clear solution results.

Procedure: Using an apparatus similar to the *Congealing Temperature Apparatus* specified therein, proceed as directed for *Procedure* in *Congealing Temperature* ⟨651⟩, reading "solidification temperature" for "congealing point" (the terms are synonymous). The average of NLT four consecutive readings of the highest point to which the temperature rises is the solidification temperature of the fatty acids.

- **Fatty Acid Composition**

Standard solution: Prepare an ester mixture of known composition containing the esters required in the individual monograph. This *Standard solution* may contain other components. [Note—Ester mixtures are available commercially from Nu-Chek-Prep, Inc., PO Box 295, Elysian, MN 56028. Typical Nu-Chek-Prep ester mixtures useful in this test include Nu-Chek 17A and Nu-Chek 19A.] Nu-Chek mixture 17A has the following composition:

Table 4

Percentage	Fatty Acid Ester	Carbon-Chain Length	Number of Double Bonds
1.0	Methyl myristate	14	0
4.0	Methyl palmitate	16	0
3.0	Methyl stearate	18	0
3.0	Methyl arachidate	20	0
3.0	Methyl behenate	22	0
3.0	Methyl lignocerate	24	0
45.0	Methyl oleate	18	1
15.0	Methyl linoleate	18	2
3.0	Methyl linolenate	18	3
20.0	Methyl erucate	22	1

Nu-Chek mixture 19A has the following composition:

Table 5

Percentage	Fatty Acid Ester	Carbon-Chain Length	Number of Double Bonds
7.0	Methyl caprylate	8	0
5.0	Methyl caprate	10	0
48.0	Methyl laurate	12	0
15.0	Methyl myristate	14	0
7.0	Methyl palmitate	16	0
3.0	Methyl stearate	18	0
12.0	Methyl oleate	18	1
3.0	Methyl linoleate	18	2

0.5 N Methanolic sodium hydroxide solution: Dissolve 2 g of sodium hydroxide in 100 mL of methanol.

Test solution: [NOTE—If fatty acids containing more than 2 double bonds are present in the test specimen, remove air from the flask by purging it with nitrogen for a few minutes.] Transfer about 100 mg of the test specimen to a 50-mL conical flask fitted with a suitable water-cooled reflux condenser and a magnetic stir bar. Add 4 mL of *0.5 N Methanolic sodium hydroxide solution,* and reflux until fat globules disappear (usually 5–10 min). Add 5 mL of a solution prepared by dissolving 14 g of boron trifluoride in methanol to make 100 mL, swirl to mix, and reflux for 2 min. Add 4 mL of chromatographic *n*-heptane through the condenser, and reflux for 1 min. Cool, remove the condenser, add about 15 mL of saturated sodium chloride solution, shake, and allow the layers to separate. Pass the *n*-heptane layer through 0.1 g of anhydrous sodium sulfate (previously washed with chromatographic *n*-heptane) into a suitable flask. Transfer 1.0 mL of this solution to a 10-mL volumetric flask, dilute with chromatographic *n*-heptane to volume, and mix.

System suitability solution: Transfer about 20 mg each of stearic acid, palmitic acid, and oleic acid to a 25-mL conical flask fitted with a suitable water-cooled reflux condenser and a magnetic stir bar, and proceed as directed for *Test solution* beginning with "Add 5.0 mL of a solution prepared by dissolving".

Chromatographic system

(See *Chromatography* ⟨621⟩.)

The gas chromatograph is equipped with a flame-ionization detector, maintained at a temperature of about 260°, a splitless injection system, and a 0.53-mm × 30-m fused-silica capillary column bonded with a 1.0-µm layer of phase G16. The chromatograph is programmed to maintain the column temperature at 70° for about 2 min after injection, then to increase the temperature at the rate of 5°/min to 240°, and finally to maintain this temperature for 5 min. The injection port temperature is maintained at about 220°. The carrier gas is helium with a linear velocity of about 50 cm/s.

Chromatograph the *System suitability solution,* and record the peak responses as directed for *Procedure:* the relative retention times are about 0.87 for methyl palmitate, 0.99 for methyl stearate, and 1.0 for methyl oleate; the resolution, *R,* between methyl stearate and methyl oleate is NLT 1.5; and the relative standard deviation of the peak area responses for the palmitate and stearate peaks for replicate injections is NMT 6.0%. The relative standard deviation of the peak area response ratio of the palmitate to stearate peaks from these replicate injections is NMT 1.0%.

Procedure: Separately inject equal volumes (about 1 µL) of the *Standard solution* and the *Test solution* into the chromatograph, record the chromatograms, identify the fatty acid ester peaks in the chromatogram of the *Test solution* by comparing the retention times of these peaks with those in the chromatogram of the *Standard solution,* and measure the peak areas for all of the fatty acid ester peaks in the chromatogram from the *Test solution.* Calculate the percentage of each fatty acid component in the test specimen:

$$\text{Result} = 100 \times (A/B)$$

A = area of the peak response obtained for each individual fatty acid ester component
B = sum of the peak areas of all of the peaks, excluding the solvent peak, in the chromatogram from the *Test solution*

• **OMEGA-3 FATTY ACIDS DETERMINATION AND PROFILE**

The following procedure may be used for the determination of eicosapentaenoic acid (EPA) (C20:5 n-3), docosahexaenoic acid (DHA) (C22:6 n-3), and total omega-3 acids obtained from fish, plant, or microbial sources in bulk oils and encapsulated oil, either as triglycerides or as ethyl esters. The term "triglyceride" is applicable to algal oils, fish oils, fish liver oils, and products containing omega-3-acids in triglycerides form. The results are expressed as free fatty acids or ethyl esters. Perform the tests as rapidly as possible. Protect the solutions from actinic light, oxidizing agents, oxidation catalysts, and air.

Content of EPA and DHA

Antioxidant solution: Dissolve an accurately weighed quantity of butylated hydroxytoluene in 2,2,4-trimethylpentane to obtain a solution with a concentration of 0.05 mg per mL.

Internal standard solution: Transfer an accurately weighed quantity of USP Methyl Tricosanoate RS to a volumetric flask. Dissolve in *Antioxidant solution,* and dilute with the same solvent to obtain a solution with a concentration of about 7.0 mg/mL. [NOTE—Guard the solution against evaporation during use.]

Test solution 1 (for triglycerides): In a 10-mL volumetric flask, dissolve the mass of sample to be examined, according to *Table 6,* in *Antioxidant solution,* and dilute with the same solution to volume. Transfer 2.0 mL of this solution to a glass tube, and evaporate the solvent with a gentle stream of nitrogen. Add 1.5 mL of a 2% (w/v) solution of sodium hydroxide in methanol, cap tightly with a polytetrafluoroethylene-lined cap, mix, and heat in a boiling water bath for 7 min. Cool, add 2 mL of boron trichloride–methanol solution (120 g in 1000 mL of methanol), cover with nitrogen, cap tightly, mix, and heat in a boiling water bath for 30 min. Cool to 40°–50°, add 1.0 mL of 2,2,4-trimethylpentane, cap, and mix on a vortex mixer or shake vigorously for at least 30 s. Immediately add 5 mL of saturated sodium chloride solution containing 1 volume of sodium chloride and 2 volumes of water. [NOTE—Shake from time to time. Before use, decant the solution from any undissolved substance, and filter if necessary.] Cover with nitrogen, cap, and mix on a vortex mixer or shake thoroughly for at least 15 s. Allow the upper layer to become clear, and transfer to a separate tube. Shake the methanol layer once more with 1.0 mL of 2,2,4-trimethylpentane, and combine the 2,2,4-trimethylpentane extracts. Wash the combined extracts with two quantities, 1 mL each, of water, and dry over anhydrous sodium sulfate.

Table 6

Approx. Sum EPA + DHA	Amount of Sample to Be Weighed (g)
30%–50%	0.4–0.5
50%–70%	0.3
>70%	0.25

Test solution 2 (for triglycerides): Transfer the equivalent amount of sample used to prepare *Test solution 1* to a 10-mL volumetric flask, and dissolve in and dilute with *Internal standard solution* to volume. Gentle heating (up to 60°) may be applied to obtain a clear solution. Then proceed as directed in *Test solution 1* starting with "Transfer 2.0 mL".

Test solution 3 (for ethyl esters): In a 10-mL volumetric flask, dissolve the mass of sample to be examined, according to *Table 6*, in the *Internal standard solution*, and dilute with the same solution to volume. Gentle heating (up to 60°) may be applied to obtain a clear solution.

Test solution 4 (for ethyl esters): Transfer the equivalent amount of sample used to prepare *Test solution 3* to a 10-mL volumetric flask, and dissolve in and dilute with *Antioxidant solution* to volume.

Standard solution 1a: Transfer 60 mg of USP Docosahexaenoic Acid Ethyl Esters RS, accurately weighed, to a 10-mL volumetric flask, and dissolve in and dilute with *Internal standard solution* to volume. Gentle heating (up to 60°) may be applied to obtain a clear solution.

Standard solution 1b: Transfer 90 mg of USP Eicosapentaenoic Acid Ethyl Esters RS, accurately weighed, to a 10-mL volumetric flask, and dissolve in and dilute with *Internal standard solution* to volume. Gentle heating (up to 60°) may be applied to obtain a clear solution.

Standard solution 1a and *Standard solution 1b* are ready for ethyl esters analysis. For triglycerides analysis, continue with *Standard solution 2a* and *Standard solution 2b*.

Standard solution 2a: Transfer 2.0 mL of *Standard solution 1a* to a glass tube, and evaporate the solvent with a gentle stream of nitrogen. Then proceed as directed for *Test solution 1* starting with, "Add 1.5 mL".

Standard solution 2b: Transfer 2.0 mL of *Standard solution 1b* to a glass tube, and evaporate the solvent with a gentle stream of nitrogen. Then proceed as directed for *Test solution 1* starting with, "Add 1.5 mL".

System suitability solution 1: Transfer 0.300 g of methyl palmitate, 0.300 g of methyl stearate, 0.300 g of methyl arachidate, and 0.300 g of methyl behenate, accurately weighed, to a 10-mL volumetric flask, and dissolve in and dilute with *Antioxidant solution* to volume.

System suitability solution 2: [NOTE—This solution must be prepared only for triglycerides and only if tetracos-15-enoic acid methyl ester is not clearly observed in the chromatogram obtained with *Test solution 2*.] Transfer 55.0 mg of docosahexaenoic acid methyl ester and about 5.0 mg of tetracos-15-enoic acid (nervonic acid) methyl ester, accurately weighed, to a 10-mL volumetric flask, and dissolve in and dilute with *Antioxidant solution* to volume.

Chromatographic system

(See *Chromatography* ⟨621⟩, *System Suitability*.)

Mode: GC

Detector: Flame ionization

Column: 0.25-mm × 25-m fused-silica capillary column bonded with a 0.20-µm film of phase G16

Temperatures

Injection port

Split injection: 250°

Splitless injection: 90°–250°

Detector: 270°

Column: See *Table 7a* or *Table 7b*.

Table 7a (Split Injection)

Initial Temperature (°)	Hold Time at 170° (min)	Temperature Ramp (°/min)	Final Temperature (°)	Hold Time at Final Temperature (min)
170	2	3	240	2.5

Table 7b (Splitless Injection)

Initial Temperature (°)	Hold Time at 90° (min)	Temperature Ramp Number 1 (°/min)	To Temperature (°)	Temperature Ramp Number 2 (°/min)	To Final Temperature (°)	Hold Time at Final Temperature (min)
90	2	30	170	3	240	2

Carrier gas: Helium
Flow rate: 1 mL/min
Split flow ratio: 200:1. [NOTE—If necessary, adjust the split ratio and/or sample dilution to obtain a tailing factor of 0.8–1.5 for the fatty acid methyl ester peaks in *System suitability solution 1*, the methyl or ethyl ester peaks of eicosapentaenoic acid and docosahexaenoic acid in *Test solution 1* and *Test solution 4*, at the same time observing that for *Test solution 1* or *Test solution 4* any peaks due to the corresponding esters of C18:3 n-3, C18:4 n-3, C20:4 n-3, C21:5 n-3, and C22:5 n-3 are clearly detectable. If splitless injection mode is used, solutions should be further diluted 1 in 200 with *Antioxidant solution*.]
Injection size: 1 µL

System suitability (for triglycerides)
Samples: *System suitability solution 1* and *Test solution 2* or *System suitability solution 2* (if applicable)

System suitability (for ethyl esters)
Sample: *System suitability solution 1*

System suitability requirements
Theoretical area percentages (System suitability solution 1): The area percentages, after adjusting for the actual weights, of the peaks of methyl palmitate, methyl stearate, methyl arachidate, and methyl behenate, each should be within ±1.0% (absolute) of theoretical values provided in *Table 8*.

Table 8

Fatty Acid Methyl Ester	Theoretical Area (%) in a Solution of Equal Weights of Methyl Palmitate, Methyl Stearate, Methyl Arachidate, and Methyl Behenate
Methyl palmitate	24.37
Methyl stearate	24.84
Methyl arachidate	25.23
Methyl behenate	25.56

[NOTE—The theoretical area (%) in a solution of equal weights (*Table 8*) is derived from the calculated theoretical response factors, which are 1.049, 1.029, 1.013, and 1.000 for methyl palmitate, methyl stearate, methyl arachidate, and methyl behenate, respectively.]

Resolution: For triglycerides (*Test solution 2* or *System suitability solution 2*): NLT 1.2 between the docosahexaenoic acid methyl ester and tetracos-15-enoic acid methyl ester peaks

Analysis (for triglycerides)
Samples: *Standard solution 2a, Standard solution 2b, Test solution 1*, and *Test solution 2*

Inject each sample in duplicate and measure the peak responses. Compare the chromatographic profile of *Test solution 2* with that of *Test solution 1* and identify the internal standard peak present in *Test solution 2*. Calculate the percentage of EPA or DHA in the triglycerides sample taken:

$$\text{Result} = (R_U/R_S) \times (W_S/W_U) \times F \times 100$$

R_U = ratio of peak response of either EPA or DHA to the corrected peak response of the internal standard in the chromatogram of *Test solution 2*, calculated:

$$\text{Result} = 1/[(r_{U2}/r_{T2}) - (r_{U1}/r_{T1})]$$

[NOTE—If $r_{U1} = 0$ due to no peak observed at the locus of the internal standard in the chromatogram of *Test solution 1*, then $R_U = r_{T2}/r_{U2}$.]

r_{U2} = peak response of the internal standard in the chromatogram of *Test solution 2*
r_{T2} = peak response of EPA or DHA in the chromatogram of *Test solution 2*
r_{U1} = peak response of any peak at the locus of the internal standard in the chromatogram of *Test solution 1*
r_{T1} = peak response of EPA or DHA in the chromatogram of *Test solution 1*
R_S = ratio of peak response of either DHA or EPA to the peak response of the internal standard in the chromatogram of *Standard solution 2a* or *Standard solution 2b*
W_S = weight of DHA taken for preparing *Standard solution 1a* or weight of EPA taken for preparing *Standard solution 1b* (mg)
W_U = weight of sample taken for preparing *Test solution 2* (mg)
F = factor to express content of DHA as free fatty acids, 0.921; and factor to express content of EPA as free fatty acids, 0.915

Analysis (for ethyl esters)
Samples: *Standard solution 1a, Standard solution 1b, Test solution 3*, and *Test solution 4*

Inject each sample in duplicate and measure the peak responses. Compare the chromatographic profile of *Test solution 3* with that of *Test solution 4* and identify the internal standard peak present in *Test solution 3*. Calculate the percentage of EPA or DHA in the ethyl esters sample taken:

General Chapters

$$\text{Result} = (R_U/R_S) \times (W_S/W_U) \times 100$$

R_U = ratio of peak response of either EPA or DHA to the corrected peak response of the internal standard in the chromatogram of *Test solution 3*, calculated as follows:

$$\text{Result} = 1/[(r_{U3}/r_{T3}) - (r_{U4}/r_{T4})]$$

[NOTE—If $r_{U4} = 0$ due to no peak observed at the locus of the internal standard in the chromatogram of *Test solution 4*, then $R_U = r_{T3}/r_{U3}$.]

r_{U3} = peak response of the internal standard in the chromatogram of *Test solution 3*
r_{T3} = peak response of EPA or DHA in the chromatogram of *Test solution 3*
r_{U4} = peak response of any peak at the locus of the internal standard in the chromatogram of *Test solution 4*
r_{T4} = peak response of EPA or DHA in the chromatogram of *Test solution 4*
R_S = ratio of peak response of either DHA or EPA to the peak response of the internal standard in the chromatogram of *Standard solution 1a* or *Standard solution 1b*
W_S = weight of DHA taken for preparing *Standard solution 1a* or weight of EPA taken for preparing *Standard solution 1b* (mg)
W_U = weight of sample taken for preparing *Test solution 3* (mg)

Content of total omega-3 acids (for triglycerides)

Calculate the percentage of the total omega-3 acids in the portion of triglycerides sample taken:

$$\text{Result} = \text{EPA} + \text{DHA} + [(A_{n-3} \times (\text{EPA} + \text{DHA})/(A_{EPA} + A_{DHA})]$$

EPA = content of EPA, from the test for *Content of EPA and DHA* (%)
DHA = content of DHA, from the test for *Content of EPA and DHA* (%)
A_{n-3} = sum of the areas of the peaks corresponding to C18:3 n-3, C18:4 n-3, C20:4 n-3, C21:5 n-3, and C22:5 n-3 methyl esters in the chromatogram obtained with *Test solution 1*
A_{EPA} = area of the peak corresponding to the EPA methyl ester in the chromatogram obtained with *Test solution 1*
A_{DHA} = area of the peak corresponding to the DHA methyl ester in the chromatogram obtained with *Test solution 1*

Content of total omega-3 acids (for ethyl esters)

Calculate the percentage of the total omega-3 acids in the portion of ethyl esters sample taken:

$$\text{Result} = \text{EPA} + \text{DHA} + [(A_{n-3} \times (\text{EPA} + \text{DHA})/(A_{EPA} + A_{DHA})]$$

EPA = content of EPA, from the test for *Content of EPA and DHA* (%)
DHA = content of DHA, from the test for *Content of EPA and DHA* (%)
A_{n-3} = sum of the areas of the peaks corresponding to C18:3 n-3, C18:4 n-3, C20:4 n-3, C21:5 n-3, and C22:5 n-3 ethyl esters in the chromatogram obtained with *Test solution 4*
A_{EPA} = area of the peak corresponding to the EPA ethyl ester in the chromatogram obtained with *Test solution 4*
A_{DHA} = area of the peak corresponding to the DHA ethyl ester in the chromatogram obtained with *Test solution 4*

• **WATER AND SEDIMENT IN FIXED OILS**

Apparatus: The preferred centrifuge has a diameter of swing (d = distance from tip to tip of whirling tubes) of 38–43 cm and is operated at a speed of about 1500 rpm. If a centrifuge of different dimensions is used, calculate the desired rate of revolution:

$$\text{rpm} = 1500\sqrt{40.6/d}$$

The centrifuge tubes are pear-shaped and are shaped to accept closures. The total capacity of each tube is about 125 mL. The graduations are clear and distinct, reading upward from the bottom of the tube according to the scale shown in *Table 9*.

Table 9

Volume (mL)	Scale Division (mL)
0–3	0.1
3–5	0.5
5–10	1.0
10–25	5.0
25–50	25.0
50–100	50.0

Procedure: Place 50.0 mL of benzene in each of two centrifuge tubes, and to each tube add 50.0 mL of the oil, warmed if necessary to re-incorporate separated stearin, and mixed thoroughly at 25°. Insert the stopper tightly into the tubes, shake them vigorously until the contents are mixed thoroughly, and then immerse the tubes in a water bath at 50° for 10 min. Centrifuge for 10 min. Read the combined volume of water and sediment at the bottom of each tube. Centrifuge repeat-

edly for 10-min periods until the combined volume of water and sediment remains constant for three consecutive readings. The sum of the volumes of combined water and sediment in the two tubes represents the percentage, by volume, of water and sediment in the oil.

- **ANISIDINE VALUE**

The Anisidine Value is defined as 100 times the optical density measured in a 1-cm cell of a solution containing 1 g of the substance to be examined in 100 mL of a mixture of solvents and reagents according to the following method described. [NOTE—Carry out the operations as rapidly as possible, avoiding exposure to actinic light.]

Test solution A: Dissolve 0.500 g of the substance to be examined in isooctane, and dilute with the same solvent to 25.0 mL.

Test solution B: To 5.0 mL of *Test solution A* add 1.0 mL of a 2.5-g/L solution of *p*-anisidine in glacial acetic acid, shake, and store protected from light.

Standard solution: To 5.0 mL of isooctane add 1.0 mL of a 2.5-g/L solution of *p*-anisidine in glacial acetic acid, shake, and store protected from light.

Procedure: Measure the absorbance of *Test solution A* at 350 nm using isooctane as the blank. Measure the absorbance of *Test solution B* at 350 nm exactly 10 min after its preparation, using the *Standard solution* as the compensation liquid. Calculate the Anisidine Value from the expression:

$$\text{Result} = [25 \times (1.2A_S - A_B)]/m$$

A_S = absorbance of *Test solution B* at 350 nm
A_B = absorbance of *Test solution A* at 350 nm
m = weight of the substance to be examined in *Test solution A* (g)

- **TOTAL OXIDATION VALUE (TOTOX)**

Total Oxidation Value is defined:

$$\text{Result} = 2PV + AV$$

PV = Peroxide Value
AV = Anisidine Value

- **TRACE METALS**

Apparatus

The apparatus typically consists of the following:

Digestion flasks: Use a polytetrafluoroethylene flask with a volume of about 120 mL, fitted with an airtight closure, a valve to adjust the pressure inside the container, and a polytetrafluoroethylene tube to allow the release of gas.

System: Make the flask airtight, using the same torsional force for each of them.

Microwave oven: It has a magnetron frequency of 2450 MHz with a selectable output from 0 to 630 ± 70 W in 1% increments, a programmable digital computer, a polytetrafluoroethylene-coated microwave cavity with a variable speed exhaust fan, a rotating turntable drive system, and exhaust tubing to vent fumes.

Atomic absorption spectrometer: It is equipped with a hollow-cathode lamp as the source of radiation and a deuterium lamp as a background corrector. The system is fitted with the following:

1. A graphite furnace as the atomization device for cadmium, copper, iron, lead, nickel, and zinc.
2. An automated continuous-flow hydride vapor generation system for arsenic and mercury.

General procedure

[**CAUTION**—When using closed high-pressure digestion vessels and microwave laboratory equipment, the safety precautions and operating instructions given by the manufacturer must be followed.]

[NOTE—If an alternative apparatus is used, adjustment of the instrument parameters may be necessary.]

Cleaning: Clean all the glassware and laboratory equipment with a 10-mg/mL solution of nitric acid before use.

Trace metal–free nitric acid: Nitric acid meets the requirements with the maximum values for arsenic (As), cadmium (Cd), copper (Cu), iron (Fe), mercury (Hg), lead (Pb), nickel (Ni), and zinc (Zn) equal to 0.005, 0.005, 0.001, 0.02, 0.002, 0.001, 0.005, and 0.01 ppm, respectively.

Trace metal–free hydrochloric acid: Hydrochloric acid meets the requirements with the maximum values for As, Cd, Cu, Fe, Hg, Pb, Ni, and Zn equal to 0.005, 0.003, 0.003, 0.05, 0.005, 0.001, 0.004, and 0.005 ppm, respectively.

Trace metal–free sulfuric acid: Sulfuric acid meets the requirements with the maximum values for As, Cd, Cu, Fe, Hg, Pb, Ni, and Zn equal to 0.005, 0.002, 0.001, 0.05, 0.005, 0.001, 0.002, and 0.005 ppm, respectively.

Test stock solution: In a digestion flask place about 0.5 g of fatty oil, accurately weighed, as indicated in each individual monograph. Add 6 mL of *Trace metal–free nitric acid* and 4 mL of *Trace metal–free hydrochloric acid*. Close the flask.

Blank stock solution: Mix 6 mL of *Trace metal–free nitric acid* and 4 mL of *Trace metal–free hydrochloric acid* in a digestion flask.

Test solution 1: Place the digestion flask containing the *Test stock solution* in the microwave oven. Carry out the digestion in three steps according to the following program: 80% power for 15 min, 100% power for 5 min, and 80% power for 20 min.

At the end of the cycle allow the flask to cool. Add 4 mL of *Trace metal–free sulfuric acid* to the flask. Repeat the digestion program. After completing the digestion, allow the flask to cool to room temperature. Open the digestion flask, and transfer the clear, colorless solution obtained into a 50-mL volumetric flask. Rinse the digestion flask with 2 quantities, 15 mL each, of water, and collect the rinsings in the volumetric flask. Add 1.0 mL of a 10-mg/mL solution of magnesium nitrate and 1.0 mL of a 100-mg/mL solution of ammonium dihydrogen phosphate to the volumetric flask. Dilute with water to volume, and mix. This solution is *Test solution 1*.

Blank solution 1: Place the digestion flask containing *Blank stock solution* in the microwave oven. Proceed as directed in *Test solution 1* beginning with "Carry out the digestion in three steps according to the following program".

Direct calibration: [NOTE—Concentrations of the standard solutions will depend on the metal contents of the test substance.] For routine measurements, 3 standard solutions, *Blank solution 1*, and *Test solution 1* are prepared and examined. Use *Test solution 1* and *Blank solution 1* as prepared previously or as indicated in the monograph. Prepare NLT 3 standard solutions containing all the metal elements to be tested. The expected absorbance value in *Test solution 1* for each metal element should be within its corresponding calibrated absorbance range, preferably in the middle of the calibrated absorbance range. Any reagents used in the preparation of *Test solution 1* are added at the same concentration to the standard solutions.

Introduce each of the solutions into the instrument using the same number of replicates for each of the solutions to obtain a steady reading.

Prepare a calibration curve from the mean of the readings obtained with the standard solutions by plotting the means as a function of concentration. Determine the concentration of the element in *Test solution 1* from the curve obtained.

Standard additions: Add to at least four identical volumetric flasks equal volumes of *Test solution 1* as prepared previously or as indicated in the monograph. Add to all but one of the flasks progressively larger volumes of a standard solution containing a known concentration of the test element to produce a series of solutions containing steadily increasing concentrations of that element known to give responses in the linear part of the curve. Dilute the contents of each flask with the solvent specified in the monograph to volume, and mix. The flask without an addition of standard solution is labeled as the test solution.

Introduce each of the solutions into the instrument, using the same number of replicates for each of the solutions, to obtain a steady reading.

Plot the absorbances of the standard solutions and the test solution versus the added quantity of test element. [NOTE—The test solution should be plotted as if it had a content of added test element equivalent to 0 mg or µg.] Extrapolate the line joining the points on the graph until it meets the concentration axis. The distance between this point and the intersection of the axes represents the concentration of test element in the test solution.

Specific Tests

Cadmium (cd), copper (cu), iron (fe), lead (pb), nickel (ni), and zinc (zn)

Standard stock solution: Prepare a solution containing known concentrations of 5 µg/mL for each test element.

Standard solutions: In three identical 10-mL volumetric flasks introduce 10, 20, and 40 µL of *Standard stock solution*, respectively. To each flask add 5.0 mL of *Test solution 1*, dilute with water to volume, and mix.

Test solution 2: In a 10-mL volumetric flask add 5.0 mL of *Test solution 1*, dilute with water to volume, and mix.

Blank solution 2: In a 10-mL volumetric flask add 5.0 mL of *Blank solution 1*, dilute with water to volume, and mix.

Procedure: Measure the content of Cd, Cu, Fe, Pb, Ni, and Zn using a suitable graphite furnace atomic absorption spectrophotometer. Concomitantly determine the absorbances of *Blank solution 2*, the *Standard solutions*, and *Test solution 2* at least three times each. The absorbance value of *Blank solution 2* is subtracted from the value obtained using the *Standard solutions* and *Test solution 2*. Proceed as directed in the *Standard additions* method in *General Procedure*. See *Table 10* for instrumental parameters that may be used.

Table 10

	Cd	Cu	Fe	Pb	Ni	Zn
Wavelength (nm)	228.8	324.8	248.3	283.5	232	213.9
Slit (nm)	0.5	0.5	0.2	0.5	0.2	0.5
Lamp current (mA)	6	7	5	5	10	7
Ignition temperature (°)	800	800	800	800	800	800
Atomization temperature (°)	1800	2300	2300	2200	2500	2000
Background corrector	On	Off	Off	Off	Off	Off
Nitrogen flow (L/min)	3	3	3	3	3	3

Arsenic and mercury

Measure the content of arsenic and mercury against their standard solutions at a known concentration using the *Direct calibration* method in *General Procedure*, with an automated continuous-flow hydride vapor generation system.

For the 1 ppm arsenic specification limit and 1 ppm mercury specification limit, prepare three working calibration solutions with known concentrations of 5, 10, and 20 ng/mL for each test element, respectively.

The absorbance value of the blank solution is automatically subtracted from the value obtained using the test solution.

Arsenic

Blank solution 3: Add 1.0 mL of a 200-mg/mL solution of potassium iodide to 19.0 mL of *Blank solution 1* prepared previously. Allow this solution to stand at room temperature for about 50 min or at 70° for about 4 min.

Test solution 3: Add 1.0 mL of a 200-mg/mL solution of potassium iodide to 19.0 mL of *Test solution 1* prepared previously. Allow this solution to stand at room temperature for about 50 min or at 70° for about 4 min.

Acid reagent 1: *Trace metal-free hydrochloric acid*

Reducing reagent 1: A 6-mg/mL solution of sodium tetrahydroborate in a 5-mg/mL solution of sodium hydroxide

The instrumental parameters in *Table 11* may be used.

Mercury

Blank solution 4: Proceed as directed in *Blank solution 3*.

Test solution 4: Proceed as directed in *Test solution 3*.

Acid reagent 2: A 515-mg/mL solution of *Trace metal–free hydrochloric acid*

Reducing reagent 2: A 10-mg/mL solution of stannous chloride in a 200-mg/mL solution of *Trace metal–free hydrochloric acid*

The instrumental parameters in *Table 11* may be used.

Table 11

	As	Hg
Wavelength (nm)	193.7	253.7
Slit width (nm)	0.2	0.5
Lamp current (mA)	10	4
Acid reagent flow rate (mL/min)	1.0	1.0
Reducing reagent flow rate (mL/min)	1.0	1.0
Flow rate for the blank, standard, test solutions (mL/min)	7.0	7.0
Absorption cell	Quartz (heated)	Quartz (unheated)
Background corrector	Off	Off
Nitrogen flow rate (L/min)	0.1	0.1

• **STEROL COMPOSITION**

Separation of the sterol fraction

Reference solution A: Dissolve an accurately weighed quantity of cholesterol in chloroform to obtain a solution of 5% (w/v).

Developing solvent system: A mixture of toluene and acetone (95:5) or a mixture of hexane and ether (65:35)

Test solution A: Accurately weigh 5 g of the test substance into a 250-mL flask. Add 50 mL of alcoholic potassium hydroxide TS 2 (2 N alcoholic potassium hydroxide), and heat to gentle boiling with continuous vigorous stirring until saponification takes place (the solution becomes clear). Continue heating for a further 20 min, and add 50 mL of water from the top of the condenser. Cool the flask to approximately 30°. Transfer the contents of the flask to a 500-mL separating funnel with several rinses of water, amounting in all to about 50 mL. Add approximately 80 mL of ether, shake vigorously for approximately 30 s, and allow to settle. [NOTE—Any emulsion can be destroyed by adding small quantities of ethyl or methyl alcohol by means of a spray.] Separate the lower aqueous phase, and collect it into a second separating funnel. Perform two further extractions on the water–alcohol phase in the same way, using 60–70 mL of ether on each occasion. Pool the ether extracts into a single separating funnel, and wash with water, 50 mL at a time, until the wash water is no longer alkaline to phenolphthalein. Dry the ether phase with anhydrous sodium sulfate, and filter on anhydrous sodium sulfate into a previously weighed 250-mL flask, washing the funnel and filter with small quantities of ether. Distill the ether down to a few mL, and bring to dryness under a slight vacuum or in a stream of nitrogen. Complete the drying at 100° for approximately 15 min, and then weigh after cooling in a desiccator. Dissolve the unsaponifiables so obtained in chloroform to obtain a solution with a concentration of approximately 5%.

Test solution B: Treat 5 g of canola oil in the same way as prescribed for the test substance in *Test solution A*, beginning with "Add 50 mL of alcoholic potassium hydroxide TS 2 (2 N alcoholic potassium hydroxide)".

Test solution C: Treat 5 g of sunflower oil in the same way as prescribed for the test substance in *Test solution A*, beginning with "Add 50 mL of alcoholic potassium hydroxide TS 2 (2 N alcoholic potassium hydroxide)".

Procedure: Immerse the thin-layer chromatographic plate (see ⟨621⟩), 20-cm × 20-cm silica gel on polyester with a layer thickness of 200 µm and particle size of 5–17 µm,[1] completely in the 0.2 N alcoholic potassium hydroxide for 10 s, allow to dry in a fume cupboard for 2 h, and finally place at 100° for 1 h. [NOTE—Remove from the validated heating device, and keep the plate in a desiccator until required for use. The plates must be used within 15 days. Thin-layer chromatographic plates that do not require the preconditioning also are commercially available.] Use a separate plate for each test solution.

[1] A commercial TLC plate may be obtained from Sigma-Aldrich, catalog #z122785.

General Chapters

Place a mixture of toluene and acetone (95:5) or a mixture of hexane and ether (65:35) in the chamber to a depth of approximately 1 cm. Close the chamber with the appropriate cover, and leave for at least 30 min. Strips of filter paper dipping into the eluant may be placed on the internal surfaces of the chamber. [NOTE—The developing mixture should be replaced for every test to ensure reproducible elution conditions.] Apply 0.3 mL of *Test solution A* approximately 2 cm from the lower edge in a streak that is as thin and as uniform as possible. In line with the streak, place 2–3 µL of *Reference solution A* at one end of the plate. Develop the chromatograms in an equilibrated chamber with the *Developing solvent system* until the solvent front reaches approximately 1 cm from the upper edge of the plate. Remove the plate from the developing chamber, and evaporate the solvent under a current of hot air [NOTE—avoid excessive heat] or by leaving the plate for a short while under a hood. Spray the plate with a 0.2% alcoholic solution of 2,7-dichlorofluorescein, and examine in UV light at 254 nm. [NOTE—The plates pretreated with UV indicator also are commercially available and are used equivalently.] In each of the plates, mark the limits of the sterol band identified by being aligned with the stain obtained from *Reference solution A* along the edges of the fluorescence, and additionally include the area of the zones 2–3 mm above and below the visible zones corresponding to *Reference solution A*. Remove the silica gel in the marked area into a filter funnel with a G3 porous septum.[2] Add 10 mL of hot chloroform, mix carefully with the metal spatula, filter under vacuum, and collect the filtrate in the conical flask attached to the filter funnel. Wash the residue in the funnel three times with ether, about 10 mL each time, and collect the filtrate in the same flask attached to the funnel. Evaporate the filtrate to a volume of 4–5 mL, transfer the residual solution to a previously weighed 10-mL test tube with a tapering bottom and a sealing stopper, and evaporate to dryness by mild heating in a gentle stream of nitrogen. Dissolve the residue in a few drops of acetone, and evaporate again to dryness. Place at 105° for approximately 10 min, allow to cool in a desiccator, and weigh.

Treat *Test solution B* and *Test solution C* the same way as directed for *Test solution A*.

Determination of the Sterols

Test solution D: To the test tube containing the sterol fraction separated from the test substance by thin-layer chromatography add a freshly prepared mixture of anhydrous pyridine, hexamethyldisilazane, and chlorotrimethylsilane (9:3:1) [NOTE—This reagent also is commercially available and is used equivalently.] in the ratio of 50 µL for every mg of sterols, avoiding any uptake of moisture. Insert the stopper into the test tube, and shake carefully until the sterols are completely dissolved. Allow it to stand for at least 15 min at ambient temperature, and centrifuge for a few minutes if necessary. Use the supernatant. [NOTE—The slight opalescence that may form is normal and does not cause an anomaly. However, the formation of a white floc or the appearance of a pink color is indicative of the presence of moisture or deterioration of the reagent. If these occur, the test must be repeated.]

Reference solution E: To 9 parts of the sterols separated from canola oil by thin-layer chromatography, add 1 part of cholesterol. Treat the mixture in the same way as directed in *Test solution D*.

Reference solution F: Treat the sterols separated from sunflower oil by thin-layer chromatography in the same way as directed in *Test solution D*.

Chromatographic system

(See *Chromatography* ⟨621⟩.)

The gas chromatograph is equipped with a flame-ionization detector and a glass or fused-silica capillary column 20–30 m in length, internal diameter 0.25–0.32 mm, entirely coated with a 0.10- to 0.30-µm layer of stationary phase G27 or G36. The injection port temperature is maintained at 280°, the detector temperature is maintained at 290°, and the column temperature is maintained at 260 ± 5°. The carrier gas is either helium with a linear velocity of 20–35 cm/s or hydrogen with a linear velocity of 30–50 cm/s. A split ratio of 1:50 to 1:100 is used. Chromatograph *Reference solution E* and *Reference solution F*, and record the peak responses as directed in *Procedure:* the retention time should be 20 ± 5 min for β-sitosterol, and all the sterols present must be separated. The chromatogram obtained with *Reference solution E* shows four principal peaks corresponding to cholesterol, brassicasterol, campesterol, and β-sitosterol; and the chromatogram obtained with *Reference solution F* shows four principal peaks corresponding to campesterol, stigmasterol, β-sitosterol, and Δ7-stigmastenol. The retention times of the sterols with reference to β-sitosterol are given in *Table 12*.

Table 12. Relative Retention Times of Sterols for Two Different Columns

Identification	G36 Column	G27 Column
Cholesterol	0.67	0.63
Brassicasterol	0.73	0.71
24-Methylene-cholesterol	0.82	0.80
Campesterol	0.83	0.81
Campestanol	0.85	0.82
Stigmasterol	0.88	0.87
Δ7-Campesterol	0.93	0.92
Δ5,23-Stigmastadienol	0.95	0.95
Clerosterol	0.96	0.96

[2] A commercial product may be obtained from Kimble/Kontes as a filter, buchner with fritted disc, Kimax 28400-152.

Table 12. Relative Retention Times of Sterols for Two Different Columns *(Continued)*

Identification	G36 Column	G27 Column
β-Sitosterol	1.00	1.00
Sitostanol	1.02	1.02
Δ5-Avenasterol	1.03	1.03
Δ5,24-Stigmastadienol	1.08	1.08
Δ7-Stigmastenol	1.12	1.12
Δ7-Avenasterol	1.16	1.16

Procedure: Separately inject equal volumes (about 1 µL) of *Test solution D, Reference solution E*, and *Reference solution F* into the chromatograph, record the chromatograms, and measure the peak areas for the sterols. Calculate the percentage of each individual sterol in the sterol fraction of the test substance taken:

$$\text{Result} = 100 \times (A/S)$$

A = area of the peak due to the sterol component to be determined
S = sum of the areas of the peaks due to the components indicated in *Table 12*

ADDITIONAL REQUIREMENTS

- **USP Reference Standards ⟨11⟩**
  USP Docosahexaenoic Acid Ethyl Ester RS
  USP Eicosapentaenoic Acid Ethyl Ester RS
  USP Methyl Tricosanoate RS

⟨411⟩ FOLIC ACID ASSAY

INTRODUCTION

The following liquid chromatographic procedures are provided for the determination of folic acid as an active pharmaceutical ingredient, a dietary supplement ingredient, or a component of dietary supplements or pharmaceutical dosage forms.

Throughout these procedures, protect solutions containing and derived from the test specimen and the Reference Standards from the atmosphere and light, preferably by using low-actinic glassware.

ASSAY

- **Procedure 1**

This procedure can be used to determine folic acid in the following:

- Oil- and Water-Soluble Vitamins with Minerals Tablets
- Oil- and Water-Soluble Vitamins with Minerals Capsules
- Oil- and Water-Soluble Vitamins Tablets
- Oil- and Water-Soluble Vitamins Capsules
- Water-Soluble Vitamins with Minerals Tablets
- Water-Soluble Vitamins with Minerals Capsules
- Water-Soluble Vitamins Tablets
- Water-Soluble Vitamins Capsules

This procedure involves the extraction of analytes from the formulation by using an *Internal standard solution* that contains methylparaben, tetrabutylammonium hydroxide, and pentetic acid in alcoholic phosphate buffer and by mechanically shaking to release the analytes from the matrices.

Unless specified in the individual monographs, the reagent solutions, *Internal standard solution, Standard solution*, and *Sample solutions* are prepared as follows.

Reagent A: 25% Solution of tetrabutylammonium hydroxide in methanol

Reagent B: Transfer 5.0 g of pentetic acid to a 50-mL volumetric flask. Using sonication if necessary, dissolve in and dilute with 1 N sodium hydroxide to volume.

Mobile phase: 2 g of monobasic potassium phosphate in 650 mL of water. Add 12.0 mL of *Reagent A*, 7.0 mL of 3 N phosphoric acid, and 240 mL of methanol. Cool to room temperature, adjust with phosphoric acid or ammonia TS to a pH of 7.0, dilute with water to 1000 mL, and filter. Recheck the pH before use by adding water or methanol to the prepared *Mobile phase* to obtain baseline separation of folic acid and the internal standard. The pH may be increased up to 7.15 to obtain better separation. [Note—The methanol and water content may be varied (1%–3%).]

Internal standard solution: Transfer 40 mg of methylparaben to a 1000-mL volumetric flask, and add 220 mL of methanol to dissolve. Dissolve 2.0 g of monobasic potassium phosphate in 300 mL of water in a separate beaker, quantitatively transfer this solution to the flask containing the methylparaben solution, and add an additional 300 mL of water. Add 19

General Chapters

mL of *Reagent A*, 7 mL of 3 N phosphoric acid, and 30 mL of *Reagent B*. Adjust with ammonia TS to a pH of 9.8, bubble nitrogen through the solution for 30 min, dilute with water to volume, and mix.

Standard solution: 0.016 mg/mL of USP Folic Acid RS in the *Internal standard solution*

Sample solution for Tablets: Crush NLT 30 Tablets until finely powdered. Transfer a portion of powder, equivalent to 0.4 mg of folic acid, to a 50-mL amber-colored centrifuge tube. Add 25.0 mL of the *Internal standard solution*, shake by mechanical means for 10 min, and centrifuge. Filter a portion of the clear supernatant, and use the filtrate.

Sample solution for Capsules: Weigh NLT 20 Capsules in a tared weighing bottle. Open the Capsules, without the loss of shell material, and transfer the contents to a 100-mL beaker. Remove any contents adhering to the empty shells by washing, if necessary, with several portions of ether. Discard the washings, and dry the Capsule shells with the aid of a current of dry air until the odor of ether is no longer perceptible. Weigh the empty Capsule shells in the tared weighing bottle, and calculate the average net weight per Capsule. Transfer an amount of the Capsule contents to a suitable centrifuge tube, and add a volume of *Internal standard solution* to obtain a concentration of 0.016 mg/mL of folic acid. Shake by mechanical means for 10 min, and centrifuge. Filter a portion of the clear supernatant, and use the filtrate.

Chromatographic system

(See *Chromatography* ⟨621⟩, *System Suitability*.)

Mode: LC

Detector: UV 280 nm

Column: 4.6-mm × 25-cm; packing L1

Flow rate: 1 mL/min

Injection volume: 15 µL

System suitability

Sample: *Standard solution*

[NOTE—The relative retention times for folic acid and methylparaben are about 0.8 and 1.0, respectively.]

Suitability requirements

Relative standard deviation: NMT 3.0%

Analysis

Samples: *Standard solution* and appropriate *Sample solution*

Calculate the percentage of the labeled amount of folic acid ($C_{19}H_{19}N_7O_6$) in the portion of the *Sample* taken:

$$\text{Result} = (R_U/R_S) \times (C_S/C_U) \times 100$$

R_U = internal standard ratio (peak response of folic acid/peak response of the internal standard) from the appropriate *Sample solution*

R_S = internal standard ratio (peak response of folic acid/peak response of the internal standard) from the *Standard solution*

C_S = concentration of USP Folic Acid RS in the *Standard solution* (µg/mL)

C_U = nominal concentration of folic acid in the appropriate *Sample solution* (µg/mL)

• **PROCEDURE 2**

This procedure can be used to determine folic acid in the following:

- Oil- and Water-Soluble Vitamins with Minerals Tablets
- Oil- and Water-Soluble Vitamins with Minerals Capsules
- Oil- and Water-Soluble Vitamins Tablets
- Oil- and Water-Soluble Vitamins Capsules
- Water-Soluble Vitamins with Minerals Tablets
- Water-Soluble Vitamins with Minerals Capsules
- Water-Soluble Vitamins Tablets
- Water-Soluble Vitamins Capsules

This procedure involves the extraction of analytes from the formulation by using an extracting solution that contains either a mixture of edetate disodium and ammonium hydroxide or a mixture of methanol, glacial acetic acid, and ethylene glycol, and by mechanically shaking to release the analytes from the matrices.

Unless specified in the individual monographs, the reagent solution, *Diluent*, *Standard stock solution*, *Standard solutions*, and *Sample solutions* are prepared as follows.

Reagent: Dissolve 7.5 g of edetate disodium, with stirring, in 500 mL of water containing 10 mL of ammonium hydroxide.

Diluent: 60 µg/mL of ammonium hydroxide

Mobile phase: Transfer 0.4 mL of triethylamine, 15 mL of glacial acetic acid, and 350 mL of methanol to a 2000-mL volumetric flask, and dilute with 0.008 M sodium 1-hexanesulfonate to volume.

Standard stock solution: 60 µg/mL of USP Folic Acid RS in *Diluent*. Prepare this solution fresh daily.

Standard solution for Tablets: Mix 5.0 mL of the *Standard stock solution* with 10.0 mL of methanol and 35.0 mL of *Reagent*. Shake for 15 min in a water bath maintained at 60°, and cool. Filter, discarding the first few mL of the filtrate.

Standard solution for Capsules: Mix 5.0 mL of the *Standard stock solution* with 10.0 mL of a mixture of methanol and glacial acetic acid (9:1) and 30.0 mL of a mixture of methanol and ethylene glycol (1:1). Shake for 15 min in a water bath maintained at 60°, and cool. Filter, discarding the first few mL of the filtrate.

Sample solution for Tablets: Transfer a portion of finely powdered Tablets, equivalent to 0.3 mg of folic acid, to a 125-mL stoppered flask. Add 10.0 mL of methanol and 35.0 mL of *Reagent*. Shake for 15 min in a water bath maintained at 60°, and cool. Filter, discarding the first few mL of the filtrate.

Sample solution for Capsules: Weigh NLT 20 Capsules in a tared weighing bottle. Open the Capsules, without the loss of shell material, and transfer the contents to a 100-mL beaker. Remove any contents adhering to the empty shells by washing, if necessary, with several portions of ether. Discard the washings, and dry the Capsule shells with the aid of a current of dry air until the odor of ether is no longer perceptible. Weigh the empty Capsule shells in the tared weighing bottle, and calculate the average net weight per Capsule. Transfer an amount of the Capsule contents, equivalent to 0.3 mg of folic acid, to a 125-mL stoppered flask. Add 10.0 mL of a mixture of methanol and glacial acetic acid (9:1) and 30.0 mL of a mixture of methanol and ethylene glycol (1:1). Shake for 15 min in a water bath maintained at 60°, and cool. Filter, discarding the first few mL of the filtrate.

Chromatographic system

(See *Chromatography* ⟨621⟩, *System Suitability*.)

Mode: LC

Detector: UV 270 nm

Column: 4.6-mm × 25-cm; packing L7

Column temperature: 50°

Flow rate: 2 mL/min

Injection volume: 5 µL

System suitability

Sample: *Standard solution*

Suitability requirements

Relative standard deviation: NMT 2.0%

Analysis

Samples: Appropriate *Standard solution* and appropriate *Sample solution*

Calculate the percentage of the labeled amount of folic acid ($C_{19}H_{19}N_7O_6$) in the portion of the *Sample* taken:

$$\text{Result} = (r_U/r_S) \times (C_S/C_U) \times 100$$

r_U = peak response of folic acid from the appropriate *Sample solution*

r_S = peak response of folic acid from the appropriate *Standard solution*

C_S = concentration of USP Folic Acid RS in the appropriate *Standard solution* (µg/mL)

C_U = nominal concentration of folic acid in the appropriate *Sample solution* (µg/mL)

• **PROCEDURE 3**

This procedure can be used to determine folic acid in the following:

- Active pharmaceutical ingredient
- Dietary ingredient

This procedure involves the dissolution of analytes and internal standard in *Mobile phase*.

Unless specified in the individual monographs, the reagent solutions, *Internal standard solution, Standard stock solution, Standard solution, Sample stock solution*, and *Sample solution* are prepared as follows.

3 N phosphoric acid: 98 g/L of phosphoric acid in water

6 N ammonium hydroxide: Dilute 40 mL of ammonium hydroxide with water to 100 mL.

Mobile phase: Transfer 2.0 g of monobasic potassium phosphate into a 1000-mL volumetric flask, and dissolve in 650 mL of water. Add 15.0 mL of a solution of 0.5 M tetrabutylammonium hydroxide in methanol, 7.0 mL of *3 N phosphoric acid*, and 270 mL of methanol. Cool to room temperature, adjust with *3 N phosphoric acid* or *6 N ammonium hydroxide* to a pH of 5.0, and dilute with water to volume. Recheck the pH before use.

Internal standard solution: 2 mg/mL of methylparaben in *Mobile phase*. Dissolve the methylparaben first with methanol (about 4% of the final volume), and dilute with *Mobile phase* to volume.

Standard stock solution: 1 mg/mL of USP Folic Acid RS in *Mobile phase*. Dissolve the folic acid with the aid of 10% ammonium hydroxide (about 1% of the final volume), and dilute with *Mobile phase* to volume.

Standard solution: Transfer 4.0 mL of *Standard stock solution* and 4.0 mL of *Internal standard solution* to a 50-mL volumetric flask, and dilute with *Mobile phase* to volume.

Sample stock solution: Transfer 100 mg of folic acid to a 100-mL volumetric flask, and dissolve in 40 mL of *Mobile phase* and 1 mL of 10% ammonium hydroxide. Dilute with *Mobile phase* to volume.

Sample solution: Transfer 4.0 mL of *Sample stock solution* and 4.0 mL of *Internal standard solution* to a 50-mL volumetric flask, and dilute with *Mobile phase* to volume.

Chromatographic system

(See *Chromatography* ⟨621⟩, *System Suitability*.)

Mode: LC

Detector: UV 280 nm

Column: 4.6-mm × 25-cm; packing L1

Flow rate: 1.2 mL/min

Injection volume: 10 µL
System suitability
Sample: *Standard solution*
Suitability requirements
Resolution: NLT 3.6 between methylparaben and folic acid
Relative standard deviation: NMT 2.0% for the ratios of the folic acid peak response to the internal standard peak response
Analysis
Samples: *Standard solution* and *Sample solution*
Calculate the percentage of folic acid ($C_{19}H_{19}N_7O_6$) in the portion of the *Sample* taken:

$$\text{Result} = (R_U/R_S) \times (C_S/C_U) \times 100$$

R_U = internal standard ratio (peak response of folic acid/peak response of the internal standard) from the *Sample solution*
R_S = internal standard ratio (peak response of folic acid/peak response of the internal standard) from the *Standard solution*
C_S = concentration of USP Folic Acid RS in the *Standard stock solution* (mg/mL)
C_U = concentration of folic acid in the *Sample stock solution* (mg/mL)

- **Procedure 4**

This procedure can be used to determine folic acid in the following:
- Folic Acid Tablets
- Folic Acid Injection

This procedure involves the dissolution of analytes in a *Diluent* that contains 2 mL of ammonium hydroxide and 1 g of sodium perchlorate per 100 mL of water.

Unless specified in the individual monographs, the *Diluent, System suitability solution, Standard solution,* and *Sample solutions* are prepared as follows.

Mobile phase: Transfer 35.1 g of sodium perchlorate and 1.40 g of monobasic potassium phosphate to a 1-L volumetric flask. Add 7.0 mL of 1 N potassium hydroxide and 40 mL of methanol, dilute with water to volume and mix. Adjust with 1 N potassium hydroxide or phosphoric acid to a pH of 7.2.
Diluent: Aqueous solution containing 2 mL of ammonium hydroxide and 1 g of sodium perchlorate per 100 mL
System suitability solution: 0.2 mg/mL each of USP Folic Acid RS and USP Folic Acid Related Compound A RS in *Diluent*. [Note—Before use, pass through a filter of 1-µm or finer pore size.]
Standard solution: 0.20 mg/mL of USP Folic Acid RS in *Diluent*
Sample solution for Tablets: Equivalent to 0.2 mg/mL of folic acid from NLT 20 powdered Tablets in *Diluent*. Shake gently to aid dissolution, and filter, discarding the first few mL of the filtrate.
Sample solution for Injection: Dilute with *Diluent* an accurately measured volume of Injection, quantitatively and stepwise, to obtain a solution having a concentration close to that of the *Standard solution* and between 0.20 and 0.80 mg/mL.
Chromatographic system
(See *Chromatography* 〈621〉, *System Suitability*.)
Mode: LC
Detector: UV 254 nm
Column: 4.6-mm × 25-cm; packing L1
Flow rate: 1 mL/min
Injection volume: 25 µL
System suitability
Samples: *System suitability solution* and *Standard solution*
Suitability requirements
Resolution: NLT 3.6 between folic acid related compound A and folic acid, *System suitability solution*
Relative standard deviation: NMT 2.0%, *Standard solution*
Analysis
Samples: *Standard solution* and appropriate *Sample solution*
Calculate the percentage of folic acid ($C_{19}H_{19}N_7O_6$) in the portion of Tablets taken:

$$\text{Result} = (r_U/r_S) \times (C_S/C_U) \times 100$$

r_U = peak response of folic acid from the *Sample solution for Tablets*
r_S = peak response of folic acid from the *Standard solution*
C_S = concentration of USP Folic Acid RS in the *Standard solution* (mg/mL)
C_U = nominal concentration of folic acid in the *Sample solution for Tablets* (mg/mL)

Calculate the quantity, in mg, of folic acid ($C_{19}H_{19}N_7O_6$) in each mL of Injection taken:

$$\text{Result} = (r_U/r_S) \times (C_S/V_U) \times V$$

General Chapters

r_U = peak response of folic acid from the *Sample solution for Injection*
r_S = peak response of folic acid from the *Standard solution*
C_S = concentration of USP Folic Acid RS in the *Standard solution* (mg/mL)
V_U = volume of Injection taken for preparation of the *Sample solution for Injection* (mL)
V = total volume used to dilute the Injection (mL)

ADDITIONAL REQUIREMENTS

- **USP Reference Standards ⟨11⟩**
  USP Folic Acid RS
  USP Folic Acid Related Compound A RS
  Calcium formyltetrahydrofolate.

⟨413⟩ IMPURITIES TESTING IN MEDICAL GASES

INTRODUCTION

This general test chapter defines the safe and proper means to sample high-pressure gas containers of different medical gas compositions using the detector tube manufacturer's suggested total gas volume for the purpose of conducting detector tube analysis to satisfy the *USP* monographs. See *Reagents* in the section *Reagents, Indicators, and Solutions* for information on each referenced detector tube.

There are two types of detector tubes currently manufactured: those to be used with a manual hand pump of fixed volume (e.g., 100 mL/pump stroke) and those used in a continuous flow system that can be set to pass a volume of gas through the detector tube at approximately 1 atmosphere. It is important to match the appropriate detector tube type to the mode of gas volume exchange.

To ensure that the required gas volume has passed through the detector tube, measure the gas volume at the time of the analysis either by using a hand pump or using a flowmeter that is calibrated to the subject gas or corrected via a calibration chart. Flowmeter manufacturers generally provide a chart of the gas volume flow of common gases for each of the flow tubes identified in this general chapter. [Note—See general chapter *Medical Gases Assay* ⟨415⟩ for sampling.]

CONTINUOUS FLOW SYSTEM

Identify the gas contained in the container, and select the appropriate gas regulator. Secure the regulator to the gas container. Do not apply lubricant or Teflon tape to the container-to-regulator connections. Purge the regulator with the gas under test. Select float setting to obtain the proper flow rate to achieve total gas volume as recommended by the manufacturer. Attach the detector tube, then adjust the flow rate to the required level as indicated by the charts that accompany the flowmeter and the detector tube. Time the gas flow to achieve the desired total gas volume ±10 s. At the allotted time close the regulator valve, then the main container valve. Observe the tube while it is still attached to determine the degree of color change, and record the result. Remove the tube, and disconnect the apparatus, vent the regulator gas pressure to atmosphere, and remove the regulator from the container. Dispose of the tube after use.

HAND PUMP—FIXED VOLUME

The alternative approach is to apply the gas detector hand pump. The system draws a consistent volume with each pump stroke. To ensure the accuracy of the total gas volume, the user must follow the pump manufacturer's suggested recommendation about how to pump.

⟨415⟩ MEDICAL GASES ASSAY

INTRODUCTION

The evaluation of the purity of a gas used for medical treatment or as a component of a pharmaceutical process is the purpose of a *USP* medical gas monograph. The purity generally is evaluated by an assay for the content of the article and by analyses for trace impurities. The application of gas chromatography, paramagnetic analysis, and detector tubes to medical gases is somewhat different from traditional procedures used for analytes in the liquid phase and therefore warrants a separate de-

scription. This general test chapter focuses on the assay for content tests. Sampling for impurities is addressed in general chapter *Impurities Testing in Medical Gases* ⟨413⟩.

This chapter includes sampling and qualification aspects of gas chromatographic and paramagnetic analyses of medical gases. In addition, it includes a description of the initial set-up, validation, and calibration of these instruments. The specific assay procedures are defined in the specific monograph for that gas.

The basic definitions of instrumental qualification and validation are included in general information chapters *Analytical Instrument Qualification* ⟨1058⟩ and *Validation of Compendial Procedures* ⟨1225⟩, respectively, and will not be repeated. However, when variations of the materials presented in these chapters are necessary due to the character of the analyte, this chapter will define those variations.

METHODS

Gas Chromatography (GC)

See *Chromatography* ⟨621⟩.

Detectors for Medical Gases Assay

The two most common detectors used in the analyses of medical gases are the thermal conductivity detector (TCD) and flame ionization detector (FID).

The TCD will detect any gas or vapor that has a thermal conductivity (TC) that differs significantly from the high TC of the reference gas, usually helium, therefore it is virtually universal. However, the generally accepted lower detection limit for the TCD is 50 ppm v/v. This represents a limitation for the evaluation of trace impurities in medical gases.

The FID is also used for the evaluation of trace impurities in medical gases, because it is more sensitive to organic compounds but does not produce a signal for most common medical gases.

QUALIFICATION

Installation Qualification (IQ)

The IQ requirements ensure the gas chromatograph hardware and software (or readout device) is installed safely and in accordance with the GC manufacturer's instructions.

Consideration should be given to the following as applicable:

- Suitability of the sample system (including connections);
- Leakage (should be leak free);
- Representative sampling;
- Sample flow rates;
- Response time;
- Correct output signals;
- Power supply (including voltage regulation); and
- Appropriate environmental conditions of the instrument and of the sample itself (e.g., temperature and pressure).

Operational Qualification (OQ)

OQ verifies that the GC performs as intended within its anticipated operating range. For medical gas final product testing, the GC is tested to ensure repeatability (verification that relative standard deviation is consistent with claims) for each analyte of interest. Due to the specific nature of medical gas testing and the limited number of analytes, routine calibration and periodic calibration verification of a GC instrument and the testing procedure may be used in place of initial or periodic OQ. When an instrument is used for a broader range of analytes, the replacement of OQ with calibration and periodic calibration verification is inappropriate.

Performance Qualification (PQ)

For medical gas final product testing, the GC is periodically checked at appropriate intervals during analytical runs with a calibration gas (i.e., verifying that the results are consistent with a named concentration within acceptable accuracy and precision ranges after a specific number of sample injections).

Paramagnetic Oxygen Measurement

THEORY

The paramagnetic analyzer measures the displacement of a diamagnetic gas (nitrogen) by a paramagnetic gas (oxygen), in a strong magnetic field. A measuring cell typically employs a glass dumbbell with nitrogen-filled spheres that is suspended on a torsion strip between magnets that concentrate the flux around the dumbbell. When oxygen molecules enter the measuring cell, the dumbbell is deflected by the force exerted by the oxygen molecules that are attracted to the strongest part of the magnetic field. By using optical sensors, a feedback coil, and suitable electronics, analysts measure an output that is directly proportional to the partial pressure of oxygen.

Oxygen is the only paramagnetic gas present above trace levels in the atmosphere. However, paramagnetic analyzers can be affected by the magnetic susceptibility of the background gas. Therefore changes to background gases in *USP* monographs should be avoided.

Design Considerations

The design considerations for the purchase of new instruments may include the following parameters.

DRIFT

A change of the output of the instrument for a given concentration over a stated period of time under constant conditions and without any adjustments being made to the instrument by external means. Drift is the summation of two components, zero drift and span drift. Drift determines the frequency of instrument calibration.

ZERO DRIFT

A change in the output when zero gas is being measured.

SPAN DRIFT

A change in the output at the level of oxygen concentration that is being measured.

OPERATING TEMPERATURE

The ambient temperature range for which the stated performance specification of the instrument will remain valid. A larger temperature coefficient will indicate that a smaller change in ambient temperature is permitted before re-calibration is required.

OPERATING PRESSURE

The instrument should operate at the inlet pressures of the samples to be tested.

Qualification Aspects

INSTALLATION QUALIFICATION (IQ)

The IQ requirements ensure the oxygen analyzer hardware and software (or readout device) is installed safely and in accordance with the oxygen analyzer manufacturer's instructions.

Consideration should be given to the following as applicable:

- Suitability of the sample system (including connections);
- Leakage (should be leak free);
- Representative sampling;
- Sample flow rates;
- Response time;
- Correct output signals;
- Power supply (including voltage regulation); and
- Appropriate environmental conditions of the instrument and of the sample itself (e.g., temperature and pressure).

OPERATIONAL QUALIFICATION (OQ)

The OQ requirements verify that the paramagnetic analyzer performs as intended within its anticipated operating range and is suitable for the actual conditions of use. Instruments and apparatus should be calibrated and used in accordance with the oxygen analyzer manufacturer's instructions. Because of the specific nature of the instrument, routine calibration may be used in place of initial or periodic OQ testing.

PERFORMANCE QUALIFICATION (PQ)

The PQ requirements verify that the paramagnetic analyzer performs as intended in its normal operating environment. For medical gas final product testing, the paramagnetic analyzer is initially calibrated (zeroed and spanned using a certified standard) in accordance with the oxygen analyzer manufacturer's instructions and is periodically recalibrated to ensure continued acceptable performance.

ZEROING THE INSTRUMENT (ESTABLISHING THE LOWER LIMIT)

Using the certified standard defined in the monograph, establish a zero setting on the analyzer by passing the zero gas into the analyzer at the oxygen analyzer manufacturer's suggested flow rate. Maintain the flow until a stable reading is observed on the instrument. As necessary, adjust the zero setting to a value of 0.0% according to the oxygen analyzer manufacturer's instructions. Confirm the reading is stable. [NOTE—Depending on the intended use of the instrument, zeroing to a setting other than 0.0% is an acceptable alternative to this procedure if it provides greater measurement precision.]

SPANNING THE RANGE OF USE

Establish the upper limit (span) with a span gas defined in the monograph and appropriate for the range of use. Pass the span gas through the instrument at the manufacturer's suggested flow rate. Confirm the reading is stable. Adjust the span setting to the certified value of the reference standard according to the oxygen analyzer manufacturer's instructions. Confirm the reading is stable.

General Chapters

VALIDATION

Validation of this instrument is generally completed during the (IQ/OQ) process. Routine verification is performed as described in the OQ/PQ sections of this chapter; and, therefore, specific information on instrument validation is unnecessary.

PROCEDURE

For Off-line Instrument

Before analysis, the instrument is calibrated by zeroing and spanning as described in the PQ section. [NOTE—The calibration need not be run concomitantly with the test samples.] Connect the sample gas to the instrument, and establish a constant flow into the analyzer at the analyzer manufacturer's suggested flow rate. Maintain the flow until a constant reading is observed on the instrument. The definition of a constant reading is included in the analyzer manufacturer's instructions or in the user's instrument qualification documentation.

For On-line Instrument

The calibration intervals are defined by the analyzer manufacturer, by past history, or by statistical means. Establish a constant flow into the analyzer at the manufacturer's suggested flow rate.

SAMPLING

Sampling from Liquid Phase

Cylinders containing a dip tube allow a liquid sample to be obtained from the valve outlet with the cylinder in the upright position. If a dip tube is not present, the cylinder should be placed in an inverted position with the cylinder and main valve safely supported (so the liquid phase is in contact with the valve).

Sampling of medical gases should always be conducted using the required regulator. Regulators should be purged with the gas that will be sampled. When necessary, the flow to the analyzer should be measured using a calibrated flow-measuring device.

Sampling from Gaseous Phase

Cylinders that do not contain a dip tube allow a gaseous sample to be obtained from the valve outlet with the cylinder in the upright position. If a dip tube is present, the cylinder should be in an inverted position with the cylinder and main valve safely supported (so the gaseous phase is in contact with the end of the dip tube). Sampling of medical gases should always be conducted using the required regulator.

CERTIFIED STANDARDS FOR MEDICAL GAS ANALYSIS

USP monographs for medical gases require tests that use certified standards for instrument calibration and analytical determinations. Such compendial testing may be conducted using reference materials that are traceable to the U.S. National Institute of Standards and Technology or other National standards-setting organizations, e.g., Institute for National Measurement Standards (Canada). The individual monographs and the reagents, indicators, and solutions section refer to the nominal percent of various certified standards required to perform medical gas analysis. The requirements for the actual certified concentrations in terms of variance from the nominal value are indicated in the *Reagents, Indicators, and Solutions* section for each respective certified standard.

⟨425⟩ IODOMETRIC ASSAY—ANTIBIOTICS

The following method is provided for the assay of most of the Pharmacopeial penicillin antibiotic drugs and their dosage forms, for which iodometric titration is particularly suitable.

ASSAY

Change to read:

Standard preparation: Dissolve in the solvent specified in the table of *Solvents and Final Concentrations* a suitable quantity of the USP Reference Standard specified in the individual monograph, previously dried under the conditions specified in the individual monograph and accurately weighed, and dilute quantitatively and stepwise with the same solvent to obtain a solution having a known concentration of about that specified in the table. Pipet 2.0 mL of this solution into each of two 125-mL glass-stoppered conical flasks.

Solvents and Final Concentrations

Antibiotic	Solvent*	Final Concentration
Amoxicillin	Water	1.0 mg/mL
Ampicillin	Water	1.25 mg/mL
Ampicillin Sodium	●*Buffer B.1*● (CN 1-May-2017)	1.25 mg/mL
Cloxacillin Sodium	Water	1.25 mg/mL
Cyclacillin	Water	1.0 mg/mL
Dicloxacillin Sodium	●*Buffer B.1*● (CN 1-May-2017)	1.25 mg/mL
Methicillin Sodium	●*Buffer B.1*● (CN 1-May-2017)	1.25 mg/mL
Nafcillin Sodium	●*Buffer B.1*● (CN 1-May-2017)	1.25 mg/mL
Oxacillin Sodium	●*Buffer B.1*● (CN 1-May-2017)	1.25 mg/mL
Penicillin G Potassium	●*Buffer B.1*● (CN 1-May-2017)	2,000 units/mL
Penicillin G Sodium	●*Buffer B.1*● (CN 1-May-2017)	2,000 units/mL
Penicillin V Potassium	●*Buffer B.1*● (CN 1-May-2017)	2,000 units/mL
Phenethicillin Potassium	●*Buffer B.1*● (CN 1-May-2017)	2,000 units/mL

* Unless otherwise noted, the *Buffers* are the potassium phosphate buffers defined in the section *Media and Diluents* under *Antibiotics—Microbial Assays* ⟨81⟩, except that sterilization is not required before use.

Assay preparation: Unless otherwise specified in the individual monograph, dissolve in the solvent specified in the table of *Solvents and Final Concentrations* a suitable quantity, accurately weighed, of the specimen under test, and dilute quantitatively with the same solvent to obtain a solution having a known final concentration of about that specified in the table. Pipet 2 mL of this solution into each of two 125-mL glass-stoppered conical flasks.

Procedure

Inactivation and titration: To 2.0 mL of the *Standard preparation* and of the *Assay preparation*, in respective flasks, add 2.0 mL of 1.0 N sodium hydroxide, mix by swirling, and allow to stand for 15 minutes. To each flask add 2.0 mL of 1.2 N

hydrochloric acid, add 10.0 mL of 0.01 N iodine VS, immediately insert the stopper, and allow to stand for 15 minutes. Titrate with 0.01 N sodium thiosulfate VS. As the endpoint is approached, add 1 drop of starch iodide paste TS, and continue the titration to the discharge of the blue color.

Blank determination: To a flask containing 2.0 mL of the *Standard preparation* add 10.0 mL of 0.01 N iodine VS. If the *Standard Preparation* contains amoxicillin or ampicillin, immediately add 0.1 mL of 1.2 N hydrochloric acid. Immediately titrate with 0.01 N sodium thiosulfate VS. As the endpoint is approached, add 1 drop of starch iodide paste TS, and continue the titration to the discharge of the blue color. Similarly treat a flask containing 2.0 mL of the *Assay preparation*.

Calculations

Calculate the microgram (or unit) equivalent (F) of each mL of 0.01 N sodium thiosulfate consumed by the *Standard preparation* by the formula:

$$\text{Result} = (2CP)/(B - I)$$

C = concentration of Reference Standard in the *Standard preparation* (mg/mL)
P = potency of the Reference Standard (µg/mg or units/mg)
B = volume of 0.01 N sodium thiosulfate consumed in the *Blank determination* (mL)
I = volume of 0.01 N sodium thiosulfate consumed in the *Inactivation and titration* (mL)

Calculate the potency of the specimen under test by the formula given in the individual monograph.

⟨429⟩ LIGHT DIFFRACTION MEASUREMENT OF PARTICLE SIZE

INTRODUCTION

The method is based on the ISO standards 13320-1(1999) and 9276-1(1998).

This general chapter has been harmonized with the corresponding texts of the *European Pharmacopoeia* and/or the *Japanese Pharmacopoeia.*

The laser light diffraction technique used for the determination of particle-size distribution is based on the analysis of the diffraction pattern produced when particles are exposed to a beam of monochromatic light. Historically, the early laser diffraction instruments only used scattering at small angles. However, the technique has since been broadened to include laser light scattering in a wider angular range and application of the Mie theory, in addition to the Fraunhofer approximation and anomalous diffraction.

The technique cannot distinguish between scattering by single particles and scattering by clusters of primary particles, i.e., by agglomerates or aggregates. As most particulate samples contain agglomerates or aggregates and as the focus of interest is generally on the size distribution of primary particles, the clusters are usually dispersed into primary particles before measurement.

For nonspherical particles, an equivalent sphere-size distribution is obtained because the technique assumes spherical particles in its optical model. The resulting particle-size distribution may differ from those obtained by methods based on other physical principles (e.g., sedimentation, sieving).

This chapter provides guidance for the measurement of size distributions of particles in different dispersed systems (e.g., powders, sprays, aerosols, suspensions, emulsions, and gas bubbles in liquids), through analysis of their angular light-scattering patterns. It does not address specific requirements of particle-size measurement of specific products.

PRINCIPLE

A representative sample, dispersed at an adequate concentration in a suitable liquid or gas, is passed through a beam of monochromatic light, usually a laser. The light scattered by the particles at various angles is measured by a multi-element detector. Numerical values representing the scattering pattern are then recorded for subsequent analysis. These scattering pattern values are then transformed, using an appropriate optical model and mathematical procedure, to yield the proportion of total volume to a discrete number of size classes, forming a volumetric particle-size distribution.

INSTRUMENT

The instrument is located in an environment where it is not affected by electrical noise, mechanical vibrations, temperature fluctuations, humidity, or direct bright light.

An example of a setup of a laser light diffraction instrument is given in *Figure 1*. Other equipment may be used.

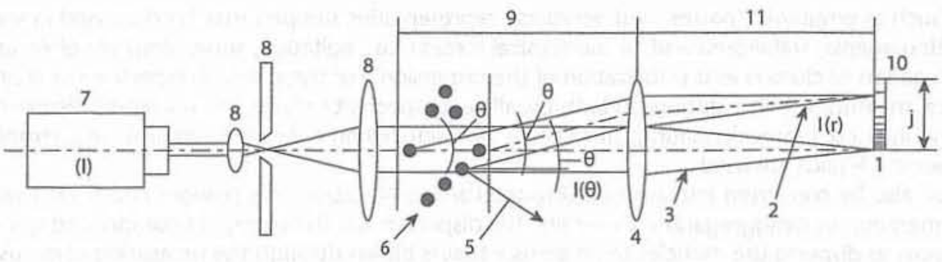

Figure 1. Example of a set-up of a laser light diffraction instrument.

The instrument comprises a laser light source, beam processing optics, a sample measurement region (or cell), a Fourier lens, and a multi-element detector for measuring the scattered light pattern. A data system is also required for deconvolution of the scattering data into a volumetric size distribution and associated data analysis and reporting.

The particles can enter the laser beam in two positions. In the conventional case the particles enter the parallel beam before the collecting lens and within its working distance. In so-called reversed Fourier optics the particles enter behind the collecting lens and thus in a converging beam. The advantage of the conventional setup is that a reasonable path length for the sample is allowed within the working distance of the lens. The second setup allows only small path lengths but enables measurement of scattered light at larger angles, which is useful when submicron particles are present.

The interaction of the incident light beam and the ensemble of dispersed particles results in a scattering pattern with different light intensities at various angles. The total angular intensity distribution, consisting of both direct and scattered light, is then focused onto a multi-element detector by a lens or a series of lenses. These lenses create a scattering pattern that, within limits, does not depend on the location of the particles in the light beam. Hence, the continuous angular intensity distribution is converted into a discrete spatial intensity distribution on a set of detector elements.

It is assumed that the measured scattering pattern of the particle ensemble is identical to the sum of the patterns from all individual single scattering particles presented in random relative positions. Note that only a limited angular range of scattered light is collected by the lens(es) and, therefore, by the detector.

DEVELOPMENT OF THE METHOD

The measurement of particle size by laser diffraction can give reproducible data, even in the submicron region, provided the instrument used and the sample tested are carefully controlled to limit variability of the test conditions (e.g., dispersion medium, method of preparation of the sample dispersion).

Traditionally, the measurement of particle size using laser diffraction has been limited to particles in the range of approximately 0.1 µm to 3 mm. Because of recent advances in lens and equipment design, newer instruments are routinely capable of exceeding this range. With the validation report, the user demonstrates the applicability of the method for its intended use.

Sampling

The sampling technique must be adequate to obtain a representative sample of a suitable volume for the particle-size measurement. Sample splitting techniques such as rotating riffler or the cone and quartering method may be applied.

Evaluation of the Dispersion Procedure

The sample to be analyzed is inspected, visually or with the aid of a microscope, to estimate its size range and particle shape. The dispersion procedure must be adjusted to the purpose of the measurement. The purpose may be such that it is preferable to deagglomerate clusters into primary particles as far as possible, or it may be desirable to retain clusters as intact as possible. In this sense, the particles of interest may be either primary particles or clusters.

For the development of a method, it is highly advisable to check that comminution of the particles does not occur and, conversely, that dispersion of particles or clusters is satisfactory. This can usually be done by changing the dispersing energy and monitoring the change of the particle-size distribution. The measured size distribution must not change significantly when the sample is well dispersed and the particles are neither fragile nor soluble. Moreover, if the manufacturing process (e.g., crystallization, milling) of the material has changed, the applicability of the method must be verified (e.g., by microscopic comparison).

Sprays, aerosols, and gas bubbles in a liquid should be measured directly, provided that their concentration is adequate, because sampling or dilution generally alters the particle-size distribution.

In other cases (such as emulsions, pastes, and powders), representative samples may be dispersed in suitable liquids. Dispersing aids (wetting agents, stabilizers) and/or mechanical forces (e.g., agitation, sonication) are often applied for deagglomeration or deaggregation of clusters and stabilization of the dispersion. For these liquid dispersions, a recirculating system consisting of an optical measuring cell, a dispersion bath usually equipped with stirrer and ultrasonic elements, a pump, and tubing is most commonly used. Nonrecirculating, stirred cells are useful when only small amounts of a sample are available or when special dispersion liquids are used.

Dry powders can also be converted into aerosols through the use of suitable dry powder dispersers that apply mechanical force for deagglomeration or deaggregation. Generally, the dispersers use the energy of compressed gas or the differential pressure of a vacuum to disperse the particles to an aerosol that is blown through the measuring zone, usually into the inlet of a vacuum unit that collects the particles. However, for free-flowing, coarser particles or granules, the effect of gravity may be sufficient to disperse the particles adequately.

If the maximum particle size of the sample exceeds the measuring range of the instrument, the material that is too coarse can be removed by sieving, and the mass and percentage of removed material are reported. However, after presieving, note that the sample is no longer representative, unless proven otherwise.

Optimization of the Liquid Dispersion

Liquids, surfactants, and dispersing aids used to disperse powders must
— be transparent at the laser wavelength and practically free from air bubbles or particles;
— have a refractive index that differs from that of the test material;
— be a nonsolvent of the test material (pure liquid or prefiltered, saturated solution);
— not alter the size of the test materials (e.g., by solubility, solubility enhancement, or recrystallization effects);
— favor easy formation and stability of the dispersion;
— be compatible with the materials used in the instrument (such as O-rings, gaskets, tubing, etc.); and
— possess a suitable viscosity to facilitate recirculation, stirring, and filtration.

Surfactants and/or dispersing aids are often used to wet the particles and to stabilize the dispersion. For weak acids and weak bases, buffering of the dispersing medium at low or high pH, respectively, can assist in identifying a suitable dispersant.

A preliminary check of the dispersion quality can be performed by visual or microscopic inspection. It is also possible to take fractional samples out of a well-mixed stock dispersion. Such stock dispersions are formed by adding a liquid to the sample while mixing it with, for example, a glass rod, a spatula or a vortex mixer. Care must be taken to ensure the transfer of a representative sample and that settling of larger particles does not occur. Therefore, a sample paste is prepared or sampling is carried out quickly from a suspension maintained under agitation.

Optimization of the Gas Dispersion

For sprays and dry powder dispersions, a compressed gas free from oil, water, and particles may be used. To remove such materials from the compressed gas, a dryer with a filter can be used. Any vacuum unit should be located away from the measurement zone, so that its output does not disturb the measurement.

Determination of the Concentration Range

In order to produce an acceptable signal-to-noise ratio in the detector, the particle concentration in the dispersion must exceed a minimum level. Likewise, it must be below a maximum level in order to avoid multiple scattering. The concentration range is influenced by the width of the laser beam, the path length of the measurement zone, the optical properties of the particles, and the sensitivity of the detector elements.

In view of the above, measurements must be performed at different particle concentrations to determine the appropriate concentration range for any typical sample of material. [NOTE—In different instruments, particle concentrations are usually represented by differently scaled and differently named numbers, e.g., obscuration, optical concentration, proportional number of total mass.]

Determination of the Measuring Time

The time of measurement, the reading time of the detector, and the acquisition frequency is determined experimentally in accordance with the required precision. Generally, the time for measurement permits a large number of detector scans or sweeps at short time intervals.

Selection of an Appropriate Optical Model

Most instruments use either the Fraunhofer or the Mie theory, though other approximation theories are sometimes applied for calculation of the scattering matrix. The choice of the theoretical model depends on the intended application and the dif-

ferent assumptions (size, absorbance, refractive index, roughness, crystal orientation, mixture, etc.) made for the test material. If the refractive index values (real and imaginary parts for the used wavelength) are not exactly known, then the Fraunhofer approximation or the Mie theory with a realistic estimate of the refractive index can be used. The former has the advantages that it is simple and it does not need refractive index values; the latter usually provides less-biased particle-size distributions for small particles. For instance, if the Fraunhofer model is used for samples containing an appreciable amount of small, transparent particles, a significantly larger amount of small particles may be calculated. In order to obtain traceable results, it is essential to document the refractive index values used, because small differences in the values assumed for the real and imaginary part of the complex refractive index may cause significant differences in the resulting particle-size distributions. Small values of the imaginary part of the refractive index (about 0.01–0.1 i) are often applied to allow the correction of the absorbance for the surface roughness of the particles. It should be noted, in general, that the optical properties of the substance to be tested, as well as the structure (e.g., shape, surface roughness, and porosity) bear upon the final result.

Validation

Typically, the validity of a procedure may be assessed by the evaluation of its specificity, linearity, range, accuracy, precision, and robustness. In particle-size analysis by laser light diffraction, specificity as defined by ICH is not applicable as it is not possible to discriminate different components into a sample, nor is it possible to discriminate between agglomerates from dispersed particles unless properly complemented by microscopic techniques. Exploring a linear relationship between concentration and response, or a mathematical model for interpolation, is not applicable to this procedure. Rather than evaluating linearity, this method requires the definition of a concentration range within which the result of the measurements does not vary significantly. Concentrations below that range produce an error due to a poor signal-to-noise ratio, while concentrations above that range produce an error due to multiple scattering. The range depends mostly on the instrument hardware. Accuracy should be confirmed through an appropriate instrument qualification and comparison with microscopy, while precision may be assessed by means of a repeatability determination.

The attainable repeatability of the method mainly depends on the characteristics of the material (milled/not milled, robust/fragile, width of its size distribution, etc.), whereas the required repeatability depends on the purpose of the measurement. Mandatory limits cannot be specified in this chapter, as repeatabilities (different sample preparations) may vary appreciably from one substance to another. However, it is good practice to aim at acceptance criteria for repeatability such as % RSD $\leq$ 10% [n = 6] for any central value of the distribution (e.g., for x_{50}). Values at the sides of the distribution (e.g., x_{10} and x_{90}) are oriented towards less stringent acceptance criteria such as % RSD $\leq$ 15% [n = 6]. Below 10 µm, these values must be doubled. Robustness may be tested during the selection and optimization of the dispersion media and forces. The change of the dispersing energy may be monitored by the change in the particle-size distribution.

MEASUREMENT

Precautions

The instructions given in the instrument manual are followed:
- never look into the direct path of the laser beam or its reflections;
- earth all instrument components to prevent ignition of solvents or dust explosions;
- check the instrument set-up (e.g., warm-up, required measuring range and lens, appropriate working distance, position of the detector, no direct bright daylight); and
- in the case of wet dispersions, avoid air bubbles, evaporation of liquid, schlieren or other inhomogeneities in the dispersion; similarly, avoid improper mass-flow from the disperser or turbulent airflow in the case of dry dispersions; such effects can cause erroneous particle-size distributions.

Measurement of the Light Scattering of Dispersed Sample(s)

After proper alignment of the optical part of the instrument, a blank measurement of the particle-free dispersion medium must be performed using the same method as that used for the measurement of the sample. The background signal must be below an appropriate threshold. The detector data are saved in order to subtract them later from the data obtained with the sample. The sample dispersion is measured according to the developed method.

For each detector element, an average signal is calculated, sometimes together with its standard deviation. The magnitude of the signal from each detector element depends upon the detection area, the light intensity, and the quantum efficiency. The coordinates (size and position) of the detector elements together with the focal distance of the lens determine the range of scattering angles for each element. Most instruments also measure the intensity of the central (unscattered) laser beam. The ratio of the intensity of a dispersed sample to that in its absence (the blank measurement) indicates the proportion of scattered light and hence the particle concentration.

Conversion of Scattering Pattern Into Particle-Size Distribution

This deconvolution step is the inverse of the calculation of a scattering pattern for a given particle-size distribution. The assumption of spherical particle shape is particularly important as most algorithms use the mathematical solution for scattering from spherical particles. Furthermore, the measured data always contain some random and systematic errors, which may vitiate the size distributions. Several mathematical procedures have been developed for use in the available instruments. They contain some weighting of deviations between measured and calculated scattering patterns (e.g., least squares), some constraints (e.g., non-negativity for amounts of particles), and/or some smoothing of the size distribution curve.

The algorithms used are specific to each make and model of equipment, and are proprietary. The differences in the algorithms between different instruments may give rise to differences in the calculated particle-size distributions.

Replicates

The number of replicate measurements (with individual sample preparations) to be performed, depends on the required measurement precision. It is recommended to set this number in a substance-specific method.

REPORTING RESULTS

The particle-size distribution data are usually reported as cumulative undersize distribution and/or as density distribution by volume. The symbol x is used to denote the particle size, which in turn is defined as the diameter of a volume-equivalent sphere. Q3(x) denotes the volume fraction undersize at the particle size x. In a graphical representation, x is plotted on the abscissa and the dependent variable Q3 on the ordinate. Most common characteristic values are calculated from the particle-size distribution by interpolation. The particle sizes at the undersize values of 10%, 50%, and 90% (denoted as x_{10}, x_{50}, and x_{90}, respectively) are frequently used. x_{50} is also known as the median particle size. It is recognized that the symbol d is also widely used to designate the particle size, thus the symbol x may be replaced by d.

Moreover, sufficient information must be documented about the sample, the sample preparation, the dispersion conditions, and the cell type. Because the results depend on the particular instrument, data analysis program, and optical model used, these details must also be documented.

General Chapters

CONTROL OF THE INSTRUMENT PERFORMANCE

Use the instrument according to the manufacturer's instructions and carry out the prescribed qualifications at an appropriate frequency, according to the use of the instrument and substances to be tested.

Calibration

Laser diffraction systems, although assuming idealized properties of the particles, are based on first principles of laser light scattering. Thus, calibration in the strict sense is not required. However, it is still necessary to confirm that the instrument is operating correctly. This can be undertaken using any certified reference material that is acceptable in industrial practice. The entire measurement procedure is examined, including sample collection, sample dispersion, sample transport through the measuring zone, measurement, and the deconvolution procedure. It is essential that the total operational procedure is fully described.

The preferred certified reference materials consist of spherical particles of a known distribution. They must be certified as to the mass-percentage size distribution by an absolute technique, if available, and used in conjunction with an agreed, detailed operation procedure. It is essential that the real and imaginary parts of the complex refractive index of the material are indicated if the Mie theory is applied in data analysis. The representation of the particle-size distribution by volume will equal that of the distribution by mass, provided that the density of the particles is the same for all size fractions.

The response of a laser diffraction instrument meets the requirements if the mean value of x_{50} from at least three independent measurements does not deviate by more than 3% from the certified range of values of the certified reference material. The mean values for x_{10} and x_{90} must not deviate by more than 5% from the certified range of values. Below 10 µm, these values must be doubled.

Although the use of materials consisting of spherical particles is preferable, nonspherical particles may also be employed. Preferably, these particles have certified or typical values from laser diffraction analysis performed according to an agreed, detailed operating procedure. The use of reference values from methods other than laser diffraction may cause a significant bias. The reason for this bias is that the different principles inherent in the various methods may lead to different sphere-equivalent diameters for the same nonspherical particle.

Although the use of certified reference materials is preferred, other well-defined reference materials may also be employed. They consist of substances of typical composition and particle-size distribution for a specified class of substances. Their particle-size distribution has proven to be stable over time. The results must comply with previously determined data, with the same precision and bias as for the certified reference material.

Qualification of the System

In addition to the calibration, the performance of the instrument must be qualified at regular time intervals or as frequently as appropriate. This can be undertaken using any suitable reference material as mentioned in the previous paragraph.

The qualification of the system is based on the concept that the equipment, electronics, software, and analytical operations constitute an integral system, which can be evaluated as an entity. Thus the entire measurement procedure is examined, including sample collection, sample dispersion, sample transport through the measuring zone, and the measurement and deconvolution procedure. It is essential that the total operational procedure is fully described.

In general, unless otherwise specified in the individual monograph, the response of a laser diffraction instrument is considered to meet the requirements if the x_{50} value does not deviate by more than 10% from the range of values of the reference material. If optionally the values at the sides of the distribution are evaluated (e.g., x_{10} and x_{90}), then these values must not deviate by more than 15% from the certified range of values. Below 10 µm, these values must be doubled.

NOTE—For calibration of the instrument, stricter requirements are laid down in the paragraph on *Calibration*.

⟨431⟩ METHOXY DETERMINATION

APPARATUS

The apparatus for methoxy determination is shown diagrammatically in the *accompanying figure*. The boiling flask, A, is fitted with a capillary side-arm for the introduction of carbon dioxide or nitrogen and is connected to a column, B, which serves to separate aqueous hydriodic acid from the more volatile methyl iodide. The methyl iodide passes through water in a scrubber trap, C, and is finally absorbed in the bromine–acetic acid solution in absorption tube D. The carbon dioxide or nitrogen is introduced through a pressure-regulating device and connected to the apparatus by a small capillary containing a small cotton pledget. [NOTE—Avoid the use of organic solvents in cleaning this apparatus, since traces remaining may interfere with the determination. This test is used also for ethoxy determination with an 80-minute reaction time and a titrant equivalent of 0.751 mg of (OC_2H_5).]

For greater convenience in use and cleaning, a ground-glass ball joint connects the two upright columns of the apparatus. The top of the scrubber C consists of a 35/20 ball joint, the upper half of which is connected to the side-arm leading into tube D. This permits taking the apparatus apart and facilitates adding the water to the trap. Also, it allows access to the loose inverted (10-mm) test tube that serves as the trap over the inner tube of the scrubber C.

General Chapters

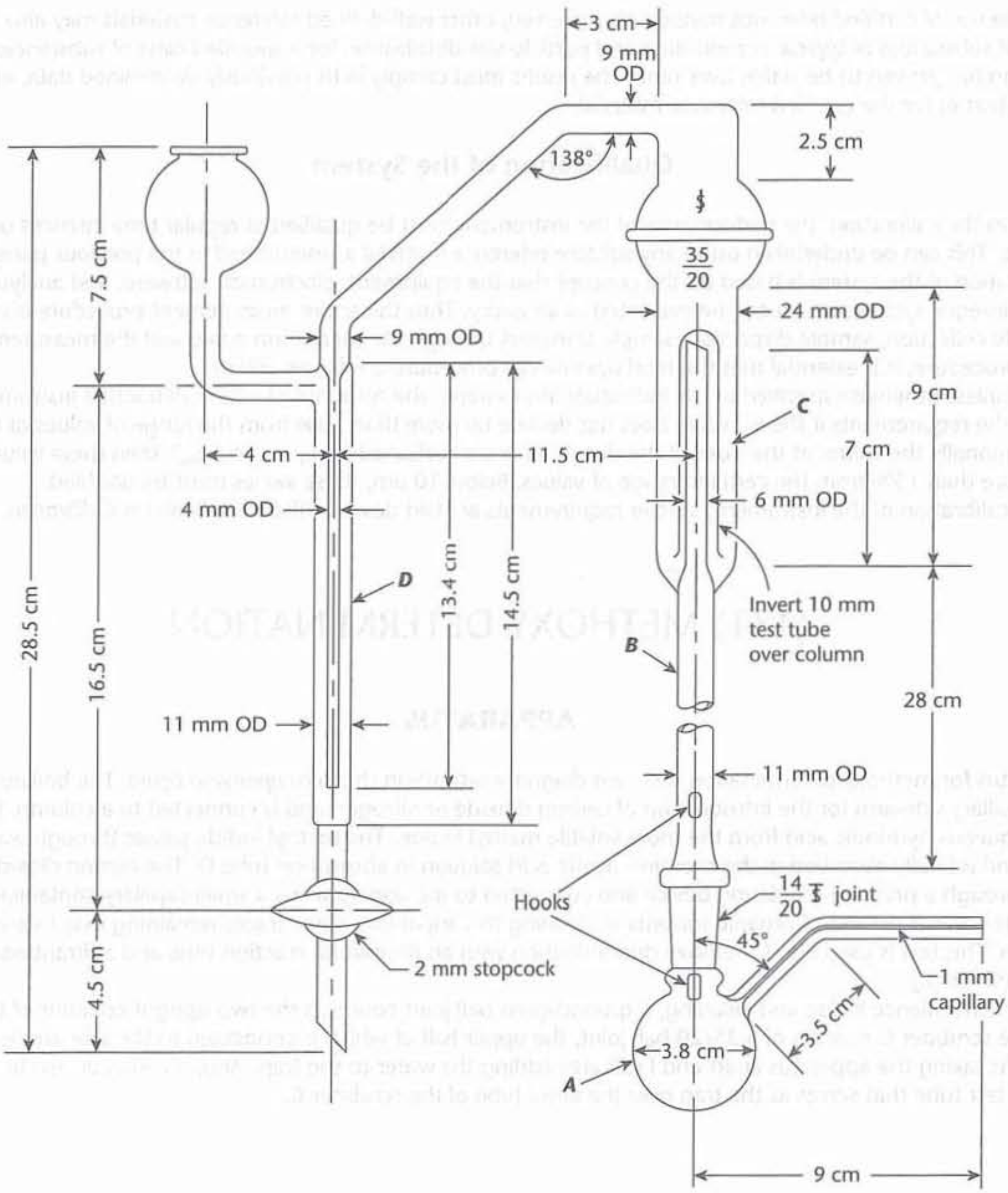

Apparatus for Methoxy Determination

REAGENTS

Bromine-Acetic Acid Solution

Dissolve 100 g of potassium acetate in 1000 mL of a solution consisting of 900 mL of glacial acetic acid and 100 mL of acetic anhydride. On the day of use, to 145 mL of this solution add 5 mL of bromine.

Hydriodic Acid

A colorless, or nearly colorless, constant-boiling reagent solution, prepared for this purpose, is available commercially. If not obtained commercially, it may be prepared by distilling hydriodic acid over red phosphorus, passing carbon dioxide or nitrogen through the apparatus during the distillation. Use the constant-boiling mixture (between 55% and 58% of HI) distilling between 126° and 127°, which is colorless or nearly colorless. [*Caution—Exercise safety precautions when distilling Hydriodic Acid.*] Place the acid in small, amber, glass-stoppered bottles previously flushed with carbon dioxide, or nitrogen, seal with paraffin, and store in a cool, dark place.

General Chapters

PROCEDURE

Prepare the apparatus by disconnecting the ball joint and pouring water into trap C until it is half-full. Connect the two parts, using a minimal amount of a suitable silicone grease to seal the ball joint. Add 7 mL of *Bromine-Acetic Acid Solution* to absorption tube D. Weigh the sample in a tared gelatin capsule, and add it to the boiling flask along with a few boiling chips or pieces of porous plate. Finally add 6 mL of *Hydriodic Acid* and attach the flask to the column, using a minimal amount of a suitable silicone grease to seal the junction. Bubble the carbon dioxide or nitrogen through the apparatus at the rate of 2 bubbles per second, place the boiling flask in an oil bath or heating mantle heated to 150°, and continue the reaction for 40 minutes for methoxy determination, or 80 minutes for ethoxy determination. Drain the contents of the absorption tube into a 500-mL conical flask containing 10 mL of sodium acetate solution (1 in 4). Rinse the tube with water, adding the rinsings to the flask, and finally dilute with water to about 125 mL. Add formic acid, dropwise, with swirling, until the reddish brown color of the bromine is discharged, then add 3 additional drops. A total of 12 to 15 drops usually is required. Allow to stand for 3 minutes, and add 15 mL of diluted sulfuric acid and 3 g of potassium iodide, and titrate immediately with 0.1 N sodium thiosulfate VS, using 3 mL of starch TS as the indicator. Perform a blank determination, including also a gelatin capsule, and make any necessary correction. Each mL of 0.1 N sodium thiosulfate is equivalent to 0.517 mg of (OCH_3).

⟨441⟩ NIACIN OR NIACINAMIDE ASSAY

ASSAY

Chemical Method

• **PROCEDURE**

The following photometric procedure involves the colorimetric reaction of niacin or niacinamide with cyanogen bromide in the presence of sulfanilic acid. It can be used for the determination of niacin or niacinamide in the monographs such as *Niacin Injection, Niacinamide Injection*, and *Niacinamide Tablets*.

[NOTE—Determine from the labeling if the vitamin in the assay specimen is niacin or niacinamide, and use the corresponding standard preparation (either *Standard niacin preparation* or *Standard niacinamide preparation*) as directed in the *Procedure*.]

Cyanogen bromide solution: Dissolve 5 g of cyanogen bromide in water to make 50 mL. [CAUTION—Prepare this solution under a hood, as cyanogen bromide volatilizes at room temperature, and the vapor is highly irritating and poisonous.]

Sulfanilic acid solution: To 2.5 g of sulfanilic acid add 15 mL of water and 3 mL of 6 N ammonium hydroxide. Mix, and add while stirring, more 6 N ammonium hydroxide, if necessary, until the acid dissolves. Adjust the solution with 3 N hydrochloric acid to a pH of about 4.5 using bromocresol green TS as an external indicator, and dilute with water to 25 mL.

Standard niacin stock solution: Transfer 25.0 mg of USP Niacin RS to a 500-mL volumetric flask, dissolve in alcohol solution (1 in 4), dilute with alcohol solution (1 in 4) to volume, and mix. Store in a refrigerator. Each mL of this solution contains 50 µg of USP Niacin RS.

Standard niacin preparation: Transfer 10.0 mL of *Standard niacin stock solution* to a 100-mL volumetric flask, dilute with water to volume, and mix. Each mL of this solution contains 5 µg of USP Niacin RS.

Standard niacinamide stock solution: Transfer 50.0 mg of USP Niacinamide RS to a 500-mL volumetric flask, dissolve in alcohol solution (1 in 4), dilute with alcohol solution (1 in 4) to volume, and mix. Store in a refrigerator. Each mL of this solution contains 100 µg of USP Niacinamide RS.

Standard niacinamide preparation: Transfer 10.0 mL of *Standard niacinamide stock solution* to a 100-mL volumetric flask, dilute with water to volume, and mix. Each mL of this solution contains 10 µg of USP Niacinamide RS.

Assay preparation: Prepare as directed in the individual monograph.

Procedure: Pipet into four marked tubes the quantities of the appropriate *Standard preparation, Assay preparation, Ammonia dilution*, and *Water* indicated in *Table 1*. Then add the other constituents, respectively, as listed in the table, according to the directions given herein.

Table 1. Reaction Mixtures for Niacin or Niacinamide Assay—Chemical Method

Constituent	Tube 1 (mL)	Tube 2 (mL)	Tube 3 (mL)	Tube 4 (mL)
Standard preparation	1.0	1.0	—	—
Assay preparation	—	—	1.0	1.0
Ammonia dilution (ammonium hydroxide, diluted to 1 in 50)	0.5	0.5	0.5	0.5
Water	6.5	1.5	6.5	1.5
Cyanogen bromide solution	—	5.0	—	5.0
Sulfanilic acid solution	2.0	2.0	2.0	2.0
Hydrochloric acid	1 drop	—	1 drop	—

To *Tube 1* add the *Sulfanilic acid solution*, shake well, and add the *Hydrochloric acid*. Mix, place in a suitable spectrophotometer, and adjust to zero absorbance at 450 nm. To *Tube 2* add the *Cyanogen bromide solution*, mix, and 30 s accurately timed after completion of the addition of the cyanogen bromide, add the *Sulfanilic acid solution*, with swirling. Close the tube, place it in the spectrophotometer, and after 2 min measure its absorbance at 450 nm against *Tube 1* as a blank, designating the absorbance as A_S. Repeat the procedure with *Tube 3* (as blank) and *Tube 4*, designating the absorbance of *Tube 4* as A_U. Calculate the quantity of niacin or niacinamide in the sample as directed in the individual monograph.

Chromatographic Methods

The following liquid chromatographic procedures are provided for the determination of niacin or niacinamide as an active pharmaceutical ingredient, a dietary supplement ingredient, or a component in the dietary supplements or pharmaceutical dosage forms.

Use the appropriate USP Reference Standard for the niacin or niacinamide present in the formulation.

Throughout these procedures, protect solutions containing and derived from the test specimen and the Reference Standards from the atmosphere and light, preferably by the use of low-actinic glassware.

• **Procedure 1**

- This procedure can be used to determine niacin or niacinamide in:
  - Oil- and water-soluble vitamins with minerals tablets
- This procedure involves the extraction of analytes from the formulation by hot water or mechanical shaking
- Unless specified in the individual monographs, the *Standard solution*, *Sample solution*, and reagent solutions are prepared as follows.

Diluent: Acetonitrile, glacial acetic acid, and water (5:1:94)

Mobile phase: A mixture of methanol, glacial acetic acid, and water (27:1:73) containing 140 mg of sodium 1-hexanesulfonate per 100 mL

Standard solution: Transfer 80 mg of either USP Niacin RS or USP Niacinamide RS to a 200-mL volumetric flask, and add 180 mL of *Diluent*. Immerse the flask in a hot water bath maintained at 65°–70° for 10 min with regular shaking or using a vortex mixer, until all the solid materials are dissolved. Chill rapidly in a cold water bath for 10 min to room temperature, and dilute with *Diluent* to volume.

Sample solution: For tablets, finely powder NLT 30 tablets. Transfer a portion of the powder, equivalent to 10 mg of niacinamide and 2.5 mg each of pyridoxine hydrochloride, riboflavin, and thiamine hydrochloride, to a 50-mL centrifuge tube. Add 25.0 mL of *Diluent*, and mix using a vortex mixer for 30 s to completely suspend the powder. Immerse the centrifuge tube in a hot water bath maintained at 65°–70°, heat for 5 min, and mix on a vortex mixer for 30 s. Return the tube to the hot water bath, heat for another 5 min, and mix on a vortex mixer for 30 s. Filter a portion of the solution, cool to room temperature, and use the clear filtrate. [Note—Use the filtrate within 3 h of filtration.]

Chromatographic system

(See *Chromatography* ⟨621⟩, *System Suitability*.)

Mode: LC

Detector: UV 280 nm

Column: 3.9-mm × 30-cm; packing L1

Flow rate: 1 mL/min

Injection volume: 10 µL

System suitability

Sample: *Standard solution*

Suitability requirements

Relative standard deviation: NMT 3.0%

Analysis

Samples: *Standard solution* and *Sample solution*

Measure the peak areas for niacin or niacinamide.

Calculate the percentage of the labeled amount of niacin ($C_6H_5NO_2$) or niacinamide ($C_6H_6N_2O$) in the portion of the *Sample* taken:

$$\text{Result} = (r_U/r_S) \times (C_S/C_U) \times 100$$

r_U = peak response of niacin or niacinamide from the *Sample solution*

r_S = peak response of niacin or niacinamide from the *Standard solution*

C_S = concentration of USP Niacin RS or USP Niacinamide RS in the *Standard solution* (mg/mL)

C_U = nominal concentration of niacin or niacinamide in the *Sample solution* (mg/mL)

• **Procedure 2**

- This procedure can be used to determine niacin or niacinamide in:
  - Oil- and water-soluble vitamins with minerals tablets
- This procedure involves the extraction of analytes from the formulation by the *Extraction solvent*, heat, and mechanical shaking

General Chapters

- Unless specified in the individual monographs, the *Standard solution*, *Sample solution*, and reagent solutions are prepared as follows.

Solution A: Transfer 1 mL of glacial acetic acid and 2.5 g of edetate disodium to a 100-mL volumetric flask. Dissolve in and dilute with water to volume.

Extraction solvent: *Solution A* and methanol (3:1)

Mobile phase: 0.1 M sodium acetate solution (13.6 mg/mL of sodium acetate in water). Adjust with acetic acid to a pH of 5.4. [NOTE—A small amount of methanol (up to 1%) may be added to the *Mobile phase* to improve resolution.]

Standard stock solution: 1 mg/mL of USP Niacin RS or USP Niacinamide RS in *Extraction solvent*

Standard solution: Transfer 5.0 mL of *Standard stock solution* to a 25-mL volumetric flask, and dilute with *Extraction solvent* to volume.

Sample solution: [NOTE—This preparation is suitable for the determination of niacin or niacinamide, pyridoxine, and riboflavin, when present in the formulation.] For tablets, finely powder NLT 20 tablets. Transfer a portion of the powder, equivalent to 2 mg of riboflavin, to a 200-mL volumetric flask. If riboflavin is not present in the formulation, transfer a portion of the powder, equivalent to 2 mg of pyridoxine. If pyridoxine is not present in the formulation, transfer a portion of the powder, equivalent to 20 mg of niacin or niacinamide. Add 100.0 mL of *Extraction solvent*, and mix for 20 min, using a wrist-action shaker. Immerse the flask in a water bath maintained at 70°–75°, and heat for 20 min. Mix on a vortex mixer for 30 s, cool to room temperature, and filter. Use the clear filtrate.

Chromatographic system

(See *Chromatography* ⟨621⟩, *System Suitability*.)

Mode: LC

Detector: UV 254 nm

Column: 4.6-mm × 25-cm; packing L1

Flow rate: 1 mL/min

Injection volume: 20 µL

System suitability

Sample: *Standard solution*

Suitability requirements

Relative standard deviation: NMT 3.0% [NOTE—If necessary, flush the column with methanol between injections.]

Analysis

Samples: *Standard solution* and *Sample solution*

Calculate the percentage of the labeled amount of niacin ($C_6H_5NO_2$) or niacinamide ($C_6H_6N_2O$) in the portion of the *Sample* taken:

$$\text{Result} = (r_U/r_S) \times (C_S/C_U) \times 100$$

r_U = peak response of niacin or niacinamide from the *Sample solution*
r_S = peak response of niacin or niacinamide from the *Standard solution*
C_S = concentration of USP Niacin RS or USP Niacinamide RS in the *Standard solution* (mg/mL)
C_U = nominal concentration of niacin or niacinamide in the *Sample solution* (mg/mL)

- **PROCEDURE 3**
  - This procedure can be used to determine niacin or niacinamide in:
    - Oil- and water-soluble vitamins with minerals tablets
  - This procedure involves the extraction of analytes from the formulation by mixtures of organic solvents, heat, and mechanical shaking
  - Unless specified in the individual monographs, the *Standard solution*, *Sample solution*, and reagent solutions are prepared as follows.

Reagent: 25 mg/mL of edetate disodium in water

Mobile phase: Transfer 0.4 mL of triethylamine, 15.0 mL of glacial acetic acid, and 350 mL of methanol to a 2000-mL volumetric flask. Dilute with 0.008 M sodium 1-hexanesulfonate to volume.

Standard stock solution: 1.5 mg/mL of USP Niacin RS or USP Niacinamide RS in the *Reagent*, with heating if necessary

Standard solution: Transfer 5.0 mL of *Standard stock solution* to a stoppered 125-mL flask. Add 10.0 mL of a mixture of methanol and glacial acetic acid (9:1) and 30.0 mL of a mixture of methanol and ethylene glycol (1:1). Insert the stopper, shake for 15 min in a water bath maintained at 60°, and cool. Filter, discarding the first few mL of the filtrate.

Sample solution: For tablets, weigh and finely powder NLT 20 tablets. Transfer a portion of the powder, equivalent to 7.5 mg of niacin or niacinamide, to a stoppered 125-mL flask. Add 10.0 mL of a mixture of methanol and glacial acetic acid (9:1) and 30.0 mL of a mixture of methanol and ethylene glycol (1:1). Insert the stopper, shake for 15 min in a water bath maintained at 60°, and cool. Filter, discarding the first few mL of the filtrate.

Chromatographic system

(See *Chromatography* ⟨621⟩, *System Suitability*.)

Mode: LC

Detector: UV 270 nm

Column: 4.6-mm × 25-cm; packing L7

Column temperature: 50°
Flow rate: 2 mL/min
Injection volume: 5 µL
System suitability
Sample: *Standard solution*
Suitability requirements
Relative standard deviation: NMT 2.0%
Analysis
Samples: *Standard solution* and *Sample solution*
Calculate the percentage of the labeled amount of niacin ($C_6H_5NO_2$) or niacinamide ($C_6H_6N_2O$) in the portion of the *Sample* taken:

$$\text{Result} = (r_U/r_S) \times (C_S/C_U) \times 100$$

r_U = peak response of niacin or niacinamide from the *Sample solution*
r_S = peak response of niacin or niacinamide from the *Standard solution*
C_S = concentration of USP Niacin RS or USP Niacinamide RS in the *Standard solution* (mg/mL)
C_U = nominal concentration of niacin or niacinamide in the *Sample solution* (mg/mL)

• **PROCEDURE 4**
- This procedure can be used to describe niacin as:
  - An active pharmaceutical ingredient
  - A dietary supplement ingredient
  - An ingredient in the niacin extended-release tablets
- This procedure involves either dissolving the analyte in the *Diluent*, a mixture of methanol and water (82:18), or extracting the analyte from the formulation with *Diluent* and mechanical shaking
- Unless specified in the individual monographs, the *System suitability solution, Standard solution A, Standard solution B, Sample solution A, Sample solution B*, and reagent solutions are prepared as follows.

Diluent: Methanol and water (82:18)
Mobile phase: Methanol and water (82:18), adjusted with glacial acetic acid to a pH of 3.15 ± 0.05
System suitability solution: 0.25 mg/mL of USP Niacin RS, 0.050 mg/mL of USP 6-Hydroxynicotinic Acid RS, and 0.10 mg/mL of pyridine in *Diluent*
Standard solution A: For active pharmaceutical ingredient or dietary supplement ingredient, use 0.25 mg/mL of USP Niacin RS in *Diluent*.
Standard solution B: For extended-release tablets, use 0.25 mg/mL of USP Niacin RS, 0.050 mg/mL of USP 6-Hydroxynicotinic Acid RS, and 0.0978 mg/mL of pyridine in *Diluent*.
Sample solution A: For active pharmaceutical ingredient or dietary supplement ingredient, use 0.25 mg/mL of Niacin in *Diluent*.
Sample solution B: For extended-release tablets, transfer a quantity of powder, equivalent to 50 mg of niacin from NLT 20 finely powdered tablets, to a suitable flask. Add *Diluent*, and stir for 2 h. Dilute with *Diluent* to a final concentration of 0.25 mg/mL of niacin.
Chromatographic system
(See *Chromatography* ⟨621⟩, *System Suitability*.)
Mode: LC
Detector: UV 260 nm
Column: 4.6-mm × 15-cm; 5-µm packing L8
Flow rate: 1 mL/min
Injection volume: 25 µL
System suitability
Samples: *System suitability solution* and *Standard solution A* or *Standard solution B*
[NOTE—The relative retention times for pyridine, 6-hydroxynicotinic acid, and niacin are 0.14, 0.64, and 1.0, respectively, *System suitability solution*.]
Suitability requirements
Resolution: NLT 1.5 between pyridine and 6-hydroxynicotinic acid, and NLT 1.5 between 6-hydroxynicotinic acid and niacin, *System suitability solution*
Relative standard deviation: NMT 2.0% for the niacin peak from replicate injections, *Standard solution A* or *Standard solution B*
Analysis
Samples: *Standard solution A* and *Sample solution A* or *Standard solution B* and *Sample solution B*
Calculate the percentage of niacin ($C_6H_5NO_2$) in the portion of the *Sample* taken:

$$\text{Result} = (r_U/r_S) \times (C_S/C_U) \times 100$$

r_U = peak response of niacin from *Sample solution A* or *Sample solution B*
r_S = peak response of niacin from *Standard solution A* or *Standard solution B*
C_S = concentration of USP Niacin RS in *Standard solution A* or *Standard solution B* (mg/mL)
C_U = concentration of Niacin in *Sample solution A* or nominal concentration of niacin in *Sample solution B* (mg/mL)

• **Procedure 5**

- This procedure can be used to determine niacinamide as:
  - An active pharmaceutical ingredient
  - A dietary supplement ingredient
- This procedure involves dissolving the niacinamide as the active pharmaceutical ingredient or a dietary supplement ingredient in the *Mobile phase*
- Unless specified in the individual monographs, the *System suitability solution, Standard solution, Niacin solution, Sample solution*, and reagent solutions are prepared as follows.

Mobile phase: Methanol and 0.005 M sodium 1-heptanesulfonate (30:70)

Standard solution: Transfer 50 mg of USP Niacinamide RS to a 100-mL volumetric flask. Add 3 mL of water to dissolve, and dilute with *Mobile phase* to volume. Dilute with *Mobile phase* to 0.04 mg/mL.

Niacin solution: Prepare as directed in the *Standard solution*, using USP Niacin RS instead of USP Niacinamide RS.

System suitability solution: Mix equal volumes of the *Standard solution* and *Niacin solution.*

Sample solution: Prepare as directed in the *Standard solution*, using Niacinamide instead of USP Niacinamide RS.

Chromatographic system

(See *Chromatography* 〈621〉, *System Suitability.*)

Mode: LC

Detector: UV 254 nm

Column: 3.9-mm × 30-cm; packing L1

Flow rate: 2 mL/min

Injection volume: 20 µL

System suitability

Samples: *System suitability solution* and *Standard solution*

Suitability requirements

Resolution: NLT 3.0 between niacin and niacinamide, *System suitability solution*

Relative standard deviation: NMT 2.0% for the niacinamide peak from replicate injections, *Standard solution*

Analysis

Samples: *Standard solution* and *Sample solution*

Calculate the percentage of niacinamide ($C_6H_6N_2O$) in the portion of the *Sample* taken:

$$\text{Result} = (r_U/r_S) \times (C_S/C_U) \times 100$$

r_U = peak response of niacinamide from the *Sample solution*
r_S = peak response of niacinamide from the *Standard solution*
C_S = concentration of USP Niacinamide RS in the *Standard solution* (mg/mL)
C_U = concentration of Niacinamide in the *Sample solution* (mg/mL)

• **Procedure 6**

- This procedure can be used to determine niacin as:
  - An active ingredient in niacin tablets
- This procedure involves the extraction of the niacin from the formulation by water, heat, and mechanical shaking
- Unless specified in the individual monographs, the *Standard solution, Sample solution*, and reagent solutions are prepared as follows.

Solution A: 5-mM solution of sodium 1-hexanesulfonate in water

Mobile phase: Methanol, acetonitrile, glacial acetic acid, and *Solution A* (14:7:1:78)

Standard solution: 0.050 mg/mL of USP Niacin RS in water. Dissolve with the aid of heat in a steam bath.

Sample solution: For tablets, transfer an equivalent to 500 mg of niacin from NLT 20 finely powdered tablets to a suitable flask. Add 50 mL of water, and heat on a steam bath for 30 min. Sonicate for 2 min, shake by mechanical means for 15 min, and cool to room temperature. Dilute with water to 0.050 mg/mL, and filter.

Chromatographic system

(See *Chromatography* 〈621〉, *System Suitability.*)

Mode: LC

Detector: UV 262 nm

Column: 3.9-mm × 30-cm; packing L1

Flow rate: 1.3 mL/min

Injection volume: 20 µL

System suitability

Sample: *Standard solution*

General Chapters

Suitability requirements

Column efficiency: NLT 1000 theoretical plates for the niacin peak

Tailing factor: NMT 2.0 for the niacin peak

Relative standard deviation: NMT 2.0% for the niacin peak from replicate injections, *Standard solution*

Analysis

Samples: *Standard solution* and *Sample solution*

Calculate the percentage of the labeled amount of niacin ($C_6H_5NO_2$) in the portion of the *Sample* taken:

$$\text{Result} = (r_U/r_S) \times (C_S/C_U) \times 100$$

r_U = peak response of niacin from the *Sample solution*
r_S = peak response of niacin from the *Standard solution*
C_S = concentration of USP Niacin RS in the *Standard solution* (mg/mL)
C_U = nominal concentration of niacin in the *Sample solution* (mg/mL)

ADDITIONAL REQUIREMENTS

- **USP Reference Standards 〈11〉**
  USP 6-Hydroxynicotinic Acid RS (see *Procedure 4*)
  USP Niacin RS
  USP Niacinamide RS

[NOTE—The previously dried Reference Standards may be stored in a desiccator over silica gel, protected from light.]

〈451〉 NITRITE TITRATION

The following general method is provided for the determination of most of the Pharmacopeial sulfonamide drugs and their dosage forms, as well as of other Pharmacopeial drugs for which nitrite titration is particularly suitable.

PROCEDURE

Accurately weigh about 500 mg in the case of a sulfonamide, or otherwise the quantity specified in the individual monograph, and transfer to a suitable open vessel. Add 20 mL of hydrochloric acid and 50 mL of water, stir until dissolved, cool to about 15°, and slowly titrate with 0.1 M sodium nitrite VS that previously has been standardized against USP Sulfanilamide RS.

Determine the endpoint electrometrically, using suitable electrodes (platinum-calomel or platinum-platinum). Place the buret tip below the surface of the solution to eliminate air oxidation of the sodium nitrite, and stir the solution gently, using a magnetic stirrer, without pulling a vortex of air under the surface, maintaining the temperature at about 15°. The titration may be carried out manually, or by means of an automatic titrator. In performing it manually, add the titrant until the titration is within 1 mL of the endpoint, and then add it in 0.1-mL portions, allowing not less than 1 minute between additions. (The instrument needle deflects and then returns to approximately its original position until the endpoint is reached.)

The weight, in mg, of the substance to which each mL of 0.1 M sodium nitrite VS is equivalent is as stated in the individual monograph.

For the assay of Tablets of the sulfonamides or other drugs, reduce not less than 20 tablets to a fine powder, weigh accurately a portion of the powder, equivalent to about 500 mg if a sulfonamide, or the quantity of drug specified in the individual monograph, and proceed as directed in the foregoing, beginning with "transfer to a suitable open vessel."

For the assay of Injections and other liquid forms where the nitrite titration is specified, pipet a portion, equivalent to about 500 mg if a sulfonamide, or the quantity of drug specified in the individual monograph, into a suitable open vessel, and proceed as directed in the foregoing, beginning with "Add 20 mL of hydrochloric acid."

ADDITIONAL REQUIREMENTS

- **USP Reference Standards 〈11〉**
  USP Sulfanilamide RS

〈461〉 NITROGEN DETERMINATION

Some alkaloids and other nitrogen-containing organic compounds fail to yield all of their nitrogen upon digestion with sulfuric acid; therefore these methods cannot be used for the determination of nitrogen in all organic compounds.

METHOD I

Nitrates and Nitrites Absent

Place about 1 g of the substance, accurately weighed, in a 500-mL Kjeldahl flask of hard borosilicate glass. The material to be tested, if solid or semisolid, may be wrapped in a sheet of nitrogen-free filter paper for convenience in transferring it to the flask. Add 10 g of powdered potassium sulfate or anhydrous sodium sulfate, 500 mg of powdered cupric sulfate, and 20 mL of sulfuric acid. Incline the flask at an angle of about 45°, and gently heat the mixture, keeping the temperature below the boiling point until frothing has ceased. Increase the heat until the acid boils briskly, and continue the heating until the solution has been clear green in color or almost colorless for 30 minutes. Allow to cool, add 150 mL of water, mix the contents of the flask, and again cool. Add cautiously 100 mL of sodium hydroxide solution (2 in 5), in such manner as to cause the solution to flow down the inner side of the flask to form a layer under the acid solution. Immediately add a few pieces of granulated zinc, and without delay connect the flask to a Kjeldahl connecting bulb (trap), previously attached to a condenser, the delivery tube from which dips beneath the surface of 100 mL of boric acid solution (1 in 25) contained in a conical flask or a wide-mouth bottle of about 500-mL capacity. Mix the contents of the Kjeldahl flask by gentle rotation, and distill until about four-fifths of the contents of the flask has distilled over. Titrate with 0.5 N sulfuric acid VS, determining the endpoint potentiometrically. Perform a blank determination, and make any necessary correction. Each mL of 0.5 N sulfuric acid VS is equivalent to 7.003 mg of nitrogen.

When the nitrogen content of the substance is known to be low, the 0.5 N sulfuric acid VS may be replaced by 0.1 N sulfuric acid VS. Each mL of 0.1 N sulfuric acid VS is equivalent to 1.401 mg of nitrogen.

Nitrates and Nitrites Present

Place a quantity of the substance, accurately weighed, corresponding to about 150 mg of nitrogen, in a 500-mL Kjeldahl flask of hard borosilicate glass, and add 25 mL of sulfuric acid in which 1 g of salicylic acid previously has been dissolved. Mix the contents of the flask, and allow the mixture to stand for 30 minutes with frequent shaking. To the mixture add 5 g of powdered sodium thiosulfate, again mix, then add 500 mg of powdered cupric sulfate, and proceed as directed under *Nitrates and Nitrites Absent*, beginning with "Incline the flask at an angle of about 45°."

When the nitrogen content of the substance is known to exceed 10%, 500 mg to 1 g of benzoic acid may be added, prior to digestion, to facilitate the decomposition of the substance.

METHOD II

Apparatus

Select an appropriate 300-mL Kjeldahl flask, from which the nitrogen is first liberated by acid digestion and then transferred quantitatively to the titration vessel by steam distillation.

Procedure

Place an accurately weighed or measured quantity of the material, equivalent to 2 to 3 mg of nitrogen, in the digestion flask of the apparatus. Add 1 g of a powdered mixture of potassium sulfate and cupric sulfate (10:1), and wash down any adhering material from the neck of the flask with a fine jet of water. Add 7 mL of sulfuric acid, allowing it to rinse down the wall of the flask, then, while swirling the flask, add 1 mL of 30 percent hydrogen peroxide cautiously down the side of the flask. (Do not add hydrogen peroxide during the digestion.)

Heat the flask over a free flame or an electric heater until the solution has a clear blue color and the sides of the flask are free from carbonaceous material. Cautiously add to the digestion mixture 70 mL of water, cool the solution, and arrange for steam distillation. Add through a funnel 30 mL of sodium hydroxide solution (2 in 5) in such manner as to cause the solution to flow down the inner side of the flask to form a layer under the acid solution, rinse the funnel with 10 mL of water, tightly close the apparatus, and begin the distillation with steam immediately. Receive the distillate in 15 mL of boric acid solution (1 in 25), to which has been added 3 drops of methyl red-methylene blue TS and sufficient water to cover the end of the condensing tube. Continue the distillation until the distillate measures 80 to 100 mL. Remove the absorption flask, rinse the end of the condensing tube with a small quantity of water, and titrate the distillate with 0.01 N sulfuric acid VS. Perform a blank determination, and make any necessary correction. Each mL of 0.01 N sulfuric acid VS is equivalent to 140.1 µg of nitrogen.

When a quantity of material containing more than 2 to 3 mg of nitrogen is taken, 0.02 N or 0.1 N sulfuric acid may be employed, provided that at least 15 mL is required for the titration. If the total dry weight of material taken is greater than 100 mg, increase proportionately the quantities of sulfuric acid and sodium hydroxide.

⟨466⟩ ORDINARY IMPURITIES

This test, where called for in the individual monograph, is provided to evaluate the presence of ordinary impurities in official articles. Ordinary impurities are defined as those species in drug substances and/or drug products that have no significant, undesirable biological activity in the amounts present. These impurities may arise out of the synthesis, preparation, or degradation of compendial articles. In certain instances, impurities that pose a potential health risk may be detected. Because these impurities would not be individually identified by the strict use of this General Chapter, a separate evaluation may be necessary to ensure that the detected impurities fit the requirements set forth in the definition of Ordinary Impurities. Selections of tests and assays allow for anticipated amounts of impurities that are unobjectionable for the customary use of the article.

REPORTING AND SPECIFICATIONS

The value of 2.0%, unless otherwise specified in the individual monograph, was selected as the general limit for the total amount of ordinary impurities in monographs where documentation did not support adoption of other values.

Where a monograph sets limits on concomitant components and/or specified impurities/degradation products, these species are not to be included in the estimation of ordinary impurities unless so stated in the individual monograph. Concomitant components are defined as species characteristic of many drug substances that are not considered to be impurities in the Pharmacopeial sense. Examples of concomitant components are geometric and optical isomers (or racemates) and antibiotics that are mixtures. Any component that can be considered a toxic impurity because of significant undesirable biological effect is not considered to be a concomitant component.

METHODOLOGY

Unless otherwise specified in an individual monograph, estimation of the amount and number of ordinary impurities is made by relative methods rather than by strict comparison to individual Reference Standards. Nonspecific detection of ordinary impurities is also consistent with this classification.

Typical evaluation methods used for ordinary impurities are thin-layer chromatographic (TLC) techniques. See *Chromatography* ⟨621⟩ for a general discussion of the thin-layer chromatographic technique. Tests for related substances or chromatographic purity may also be used to evaluate the presence of ordinary impurities. Other methods (e.g., HPLC, HPTLC, etc.) may also be used with adequate justification as an alternate method. Unless otherwise specified in the individual monograph, use the following method.

Test Solution

Prepare, in the solvent specified in the monograph, a solution of the substance under test having an accurately known final concentration of about 10 mg per mL. [NOTE—Heat or sonication may be used to dissolve the drug substance where use of such does not adversely affect the compound.]

Standard Solutions

Prepare, in the solvent specified in the monograph, solutions of the USP Reference Standard or designated substance having accurately known concentrations of 0.01 mg per mL, 0.05 mg per mL, 0.1 mg per mL, and 0.2 mg per mL. [NOTE—Heat or sonication may be used to dissolve the drug substance where use of such does not adversely affect the compound.]

Procedure

Use a thin-layer chromatographic plate coated with a 0.25-mm layer of chromatographic silica gel mixture, and the *Eluant* specified in the monograph. Apply equal volumes (20 µL) of the *Test Solution* and *Standard Solutions* to the plate, using a stream of nitrogen to dry the spots.

Allow the chromatogram to develop in a pre-equilibrated chamber until the solvent front has moved about three-fourths of the length of the plate. Remove the plate from the chamber, and air-dry. View the plate using the visualization technique(s) specified. Locate any spots other than the principal spot in the chromatogram of the *Test Solution,* and determine their relative intensities by comparison with the chromatograms of the appropriate *Standard Solutions.* See discussion above with regard to reporting and specifying total ordinary impurities.

KEY FOR VISUALIZATION TECHNIQUES

1. Use UV light at 254 nm and at about 366 nm.

2. Use Iodoplatinate TS.
3. *Solution A*—Mix 850 mg of bismuth subnitrate with 40 mL of water and 10 mL of glacial acetic acid.
   Solution B—Dissolve 8 g of potassium iodide in 20 mL of water. Mix A and B together to obtain a Stock Solution which can be stored for several months in a dark bottle. Mix 10 mL of the Stock Solution with 20 mL of glacial acetic acid, and dilute with water to make 100 mL, to prepare the spray reagent.
4. *Ninhydrin Spray*—Dissolve 200 mg of ninhydrin in 100 mL of alcohol. Heat the plate after spraying.
5. *Acid Spray*—In an ice bath, add slowly and cautiously, with stirring, 10 mL of sulfuric acid to 90 mL of alcohol. Spray the plate, and heat until charred.
6. *Acid–Dichromate Spray*—Add sufficient potassium dichromate to 100 mL of sulfuric acid to make a saturated solution. Spray the plate, and heat until charred.
7. *Vanillin*—Dissolve 1 g of vanillin in 100 mL of sulfuric acid.
8. *Chloramine T–Trichloroacetic Acid*—Mix 10 mL of a 3% aqueous solution of chloramine T with 40 mL of a 25% alcoholic solution of trichloroacetic acid. Prepare immediately before use.
9. *Folin-C*—Add 10 g of sodium tungstate and 2.5 g of sodium molybdate to 70 mL of water, add 5 mL of 85% phosphoric acid and 10 mL of 36% hydrochloric acid, and reflux this solution for 10 hours.
10. *$KMnO_4$*—Dissolve 100 mg of Potassium Permanganate in 100 mL of water.
11. *DAB*—Mix 1 g of *p*-dimethylaminobenzaldehyde in 100 mL of 0.6 N hydrochloric acid.
12. *DAC*—Mix 100 mg of *p*-dimethylaminocinnamaldehyde in 100 mL of 1 N hydrochloric acid.
13. *Ferricyanide*—Mix equal volumes of a 1% ferric chloride solution and a 1% potassium ferricyanide solution. Use immediately.
14. *Fast Blue B*—Reagent A—Dissolve 500 mg of Fast Blue B Salt in 100 mL of water.
    Reagent B—0.1 N sodium hydroxide.
    Spray first with A, then with B.
15. *Alkaline Ferric Cyanide*—Dilute 1.5 mL of a 1% potassium ferricyanide solution with water to 20 mL, and add 10 mL of 15% sodium hydroxide solution.
16. *Iodine Spray*—Prepare a 0.5% solution of iodine in chloroform.
17. Expose the plate for 10 minutes to iodine vapors in a pre-equilibrated closed chamber, on the bottom of which there are iodine crystals.
18. *Solution A*—Dissolve 0.5 g of potassium iodide in 50 mL of water.
    Solution B—Prepare a solution of 0.5 g of soluble starch in 50 mL of hot water.
    Just prior to use, mix equal volumes of *Solution A* and *Solution B*.
19. *PTSS*—Dissolve 20 g of *p*-toluenesulfonic acid in 100 mL of alcohol, spray the plate, dry for 15 minutes at 110°, and view under UV light at 366 nm.
20. *o-Tolidine Spray*—Dissolve 160 mg of *o*-tolidine in 30 mL of glacial acetic acid, dilute with water to make 500 mL, add 1 g of potassium iodide, and mix until the potassium iodide has dissolved.
21. Mix 3 mL of chloroplatinic acid solution (1 in 10) with 97 mL of water, followed by the addition of 100 mL of potassium iodide solution (6 in 100) to prepare the spray reagent.
22. *Iodine–Methanol Spray*—Prepare a mixture of iodine TS and methanol (1:1).

⟨467⟩ RESIDUAL SOLVENTS

INTRODUCTION

This general chapter applies to existing drug substances, excipients, and products. All substances and products are subject to relevant control of solvents likely to be present in a substance or product.

Where the limits to be applied comply with those given below, tests for residual solvents are not generally mentioned in specific monographs, because the solvents employed may vary from one manufacturer to another.

The objective of this general chapter is to provide acceptable amounts of residual solvents in pharmaceuticals for the safety of the patient. The chapter recommends the use of less toxic solvents and describes levels considered to be toxicologically acceptable for some residual solvents.

For pharmacopeial purposes, residual solvents in pharmaceuticals are defined as organic volatile chemicals that are used or produced in the manufacture of drug substances or excipients, or in the preparation of drug products. The residual solvents are not completely removed by practical manufacturing techniques. Appropriate selection of the solvent for the synthesis of a drug substance or an excipient may enhance the yield, or determine characteristics such as crystal form, purity, and solubility. Therefore, the solvent may sometimes be a critical element in the synthetic process. This general chapter does not address solvents deliberately used as excipients, nor does it address solvates. However, the content of solvents in such products should be evaluated and justified.

Because residual solvents do not provide therapeutic benefit, they should be removed, to the extent possible, to meet ingredient and product specifications, good manufacturing practices, or other quality-based requirements. Drug products should contain no higher levels of residual solvents than can be supported by safety data. Solvents that are known to cause unacceptable toxicities (Class 1, *Table 1*) should be avoided in the production of drug substances, excipients, or drug products unless their use can be strongly justified in a risk-benefit assessment. Solvents associated with less severe toxicity (Class 2, *Table 2*) should be limited in order to protect patients from potential adverse effects. Ideally, less toxic solvents (Class 3, *Table 3*) should be used where practical. The complete list of solvents included in this general chapter is given in *Appendix 1*. These tables and the list are not exhaustive. For the purposes of this Pharmacopeia, when a manufacturer has received approval from a competent regulatory authority for the use of a new solvent not currently listed in this general chapter, it is the responsibility of that manufacturer to notify the USP regarding the identity of this solvent, the approved residual solvent limit in the article, and the appropriate test procedure for this residual solvent in the article. The USP will then address this topic in the individual monograph. When a new solvent has been approved through the ICH process, it will be added to the appropriate list in this general chapter. At that time, consideration will be given for removal of the specific solvent test requirement in the individual monograph.

Testing of drug substances, excipients, and drug products for residual solvents should be performed when production or purification processes are known to result in the presence of such residual solvents. It is only necessary to test for residual solvents that are used or produced in the manufacture or purification of drug substances, excipients, or products.

Although manufacturers may choose to test the drug product, a cumulative procedure may be used to calculate the residual solvent levels in the drug product from the levels in the ingredients used to produce the drug product. If the calculation results in a level equal to or below that provided in this general chapter, no testing of the drug product for residual solvents need be considered. If, however, the calculated level is above the recommended level, the drug product should be tested to ascertain whether the formulation process has reduced the relevant solvent level to within the acceptable amount. A drug product should also be tested if a residual solvent is used during its manufacture.

For the purposes of this Pharmacopeia, when a manufacturer has received approval from a competent regulatory authority for a higher level of residual solvent, it is the responsibility of that manufacturer to notify the USP regarding the identity of this solvent and the approved residual solvent limit in the article. The USP will then address this topic in the individual monograph.

See *Appendix 2* for additional background information related to residual solvents.

CLASSIFICATION OF RESIDUAL SOLVENTS BY RISK ASSESSMENT

The term *tolerable daily intake* (TDI) is used by the International Program on Chemical Safety (IPCS) to describe exposure limits of toxic chemicals, and the term *acceptable daily intake* (ADI) is used by the World Health Organization (WHO) and other national and international health authorities and institutes. The term *permitted daily exposure* (PDE) is defined as a pharmaceutically acceptable intake of residual solvents to avoid confusion of differing values for ADIs of the same substance.

Residual solvents assessed in this general chapter are listed in *Appendix 1* by common names and structures. They were evaluated for their possible risk to human health and placed into one of three classes as follows:

Residual Solvent Class	Assessment
Class 1	Solvents to be avoided Known human carcinogens Strongly suspected human carcinogens Environmental hazards
Class 2	Solvents to be limited Nongenotoxic animal carcinogens or possible causative agents of other irreversible toxicity, such as neurotoxicity or teratogenicity Solvents suspected of other significant but reversible toxicities
Class 3	Solvents with low toxic potential Solvents with low toxic potential to humans; no health-based exposure limit is needed [NOTE—Class 3 residual solvents have PDEs of 50 mg or more per day.*]

* For residual solvents with PDEs of more than 50 mg per day, see the discussion in the section *Class 3* under *Limits of Residual Solvents*.

METHODS FOR ESTABLISHING EXPOSURE LIMITS

The method used to establish PDEs for residual solvents is presented in *Appendix 3*.

For articles that are designated "for veterinary use only", higher levels for the PDE and concentration limit may be justified in exceptional cases based upon the actual daily dose, actual target species, and relevant toxicological data and considering consumer safety impact. For the purpose of this Pharmacopeia, when a manufacturer has received approval from a competent regulatory authority for a higher limit, it is the responsibility of that manufacturer to notify the USP regarding the approved residual solvent limit in the article and the justification. The USP will then address this topic in the individual monograph.

OPTIONS FOR DESCRIBING LIMITS OF CLASS 2 RESIDUAL SOLVENTS

Two options are available when setting limits for Class 2 residual solvents.

Option 1

The concentration limits in ppm stated in *Table 2* are used. They were calculated using the equation below by assuming a product weight of 10 g administered daily.

$$\text{Concentration (ppm)} = (1000\ \mu\text{g/mg} \times \text{PDE})/\text{dose}$$

Here, PDE is given in terms of mg per day, and dose is given in g per day.

These limits are considered acceptable for all drug substances, excipients, and drug products. Therefore, this option may be applied if the daily dose is not known or fixed. If all drug substances and excipients in a formulation meet the limits given in *Option 1*, these components may be used in any proportion. No further calculation is necessary, provided that the daily dose does not exceed 10 g. Products that are administered in doses greater than 10 g per day are to be considered under *Option 2*.

Option 2

It is not necessary for each component of the drug product to comply with the limits given in *Option 1*. The PDE in terms of mg per day as stated in *Table 2* can be used with the known maximum daily dose and the equation above to determine the concentration of residual solvent allowed in a drug product. Such limits are considered acceptable, provided that it has been demonstrated that the residual solvent has been reduced to the practical minimum. The limits should be realistic in relation to analytical precision, manufacturing capability, and reasonable variation in the manufacturing process. The limits should also reflect contemporary manufacturing standards.

Option 2 may be applied by adding the amounts of a residual solvent present in each of the components of the drug product. The sum of the amounts of solvent per day should be less than that given by the PDE.

Consider an example of the application of *Option 1* and *Option 2* to acetonitrile concentration in a drug product. The permitted daily exposure to acetonitrile is 4.1 mg per day; thus, the *Option 1* limit is 410 ppm. The maximum administered daily weight of a drug product is 5.0 g, and the drug product contains two excipients. The composition of the drug product and the calculated maximum content of residual acetonitrile are given in the following table.

Component	Amount in Formulation (g)	Acetonitrile Content (ppm)	Daily Exposure (mg)
Drug substance	0.3	800	0.24
Excipient 1	0.9	400	0.36
Excipient 2	3.8	800	3.04
Drug product	5.0	728	3.64

Excipient 1 meets the *Option 1* limit, but the drug substance, excipient 2, and drug product do not meet the *Option 1* limit. Nevertheless, the drug product meets the *Option 2* limit of 4.1 mg per day and thus conforms to the acceptance criteria in this general chapter.

Consider another example, using acetonitrile as the residual solvent. The maximum administered daily weight of a drug product is 5.0 g, and the drug product contains two excipients. The composition of the drug product and the calculated maximum content of residual acetonitrile are given in the following table.

Component	Amount in Formulation (g)	Acetonitrile Content (ppm)	Daily Exposure (mg)
Drug substance	0.3	800	0.24
Excipient 1	0.9	2000	1.80
Excipient 2	3.8	800	3.04
Drug product	5.0	1016	5.08

In this example, the drug product meets neither the *Option 1* nor the *Option 2* limit according to this summation. The manufacturer could test the drug product to determine whether the formulation process reduced the level of acetonitrile. If the level of acetonitrile was not reduced to the allowed limit during formulation, the product fails to meet the solvent limits as described in this chapter, and the manufacturer of the drug product should take other steps to reduce the amount of acetonitrile in the drug product. In some instances, the manufacturer may have received approval from a competent regulatory authority for such a higher level of residual solvent. If this is the case, it is the responsibility of that manufacturer to notify the USP regarding the identity of this solvent and the approved residual solvent limit in the article. The USP will then address this topic in the individual monograph.

ANALYTICAL PROCEDURES

Residual solvents are typically determined using chromatographic techniques such as gas chromatography. Compendial methods for testing for residual solvent content are described under the section *Identification, Control, and Quantification of Residual Solvents* in this general chapter. The *General Notices* discuss the use of other methods in special circumstances (see 6.30. *Alternative and Harmonized Methods and Procedures*). If Class 3 solvents are present, a nonspecific method such as loss on drying may be used.

REPORTING LEVELS OF RESIDUAL SOLVENTS

Manufacturers of pharmaceutical products need certain information about the content of residual solvents in drug substances or excipients in order to meet the criteria of this general chapter. The following statements are given as acceptable examples of the information that could be provided from a supplier of drug substances or excipients to a pharmaceutical manufacturer. The supplier might choose one of the following as appropriate:

- Only Class 3 solvents are likely to be present. Loss on drying is less than 0.5%.
- Only Class 2 solvents X, Y,... are likely to be present. All are below the *Option 1* limit. (Here the supplier would name the Class 2 solvents represented by X, Y,...)
- Only Class 2 solvents X, Y,... and Class 3 solvents are likely to be present. Residual Class 2 solvents are below the *Option 1* limit, and residual Class 3 solvents are below 0.5%.

The phrase "likely to be present", as used in the above examples, refers to the solvent used or produced in the final manufacturing step and to solvents that are used or produced in earlier manufacturing steps and not removed consistently by a validated process.

If Class 1 solvents are likely to be present, they should be identified and quantified. If solvents of Class 2 or 3 are present at greater than their *Option 1* limits or 0.5%, respectively, they should be identified and quantified.

LIMITS OF RESIDUAL SOLVENTS

Class 1 (solvents to be avoided)

Class 1 residual solvents *(Table 1)* should not be employed in the manufacture of drug substances, excipients, and drug products because of the unacceptable toxicities or deleterious environmental effects of these residual solvents. However, if their use in order to produce a medicinal product with a significant therapeutic advance is unavoidable, their levels should be restricted as shown in *Table 1*, unless otherwise stated in the individual monograph. The solvent 1,1,1-trichloroethane is included in *Table 1* because it is an environmental hazard. The stated limit of 1500 ppm is based on a review of safety data.

When Class 1 residual solvents are used or produced in the manufacture or purification of a drug substance, excipient, or drug product and are not removed by the process, these solvents should be identified and quantified. The procedures described in the section *Identification, Control, and Quantification of Residual Solvents* in this general chapter are to be applied wherever possible. Otherwise, an appropriate validated procedure is to be employed.

Table 1. Class 1 Residual Solvents
(Solvents that should be avoided)

Solvent	Concentration Limit (ppm)	Concern
Benzene	2	Carcinogen
Carbon tetrachloride	4	Toxic and environmental hazard
1,2-Dichloroethane	5	Toxic
1,1-Dichloroethene	8	Toxic
1,1,1-Trichloroethane	1500	Environmental hazard

Class 2

Class 2 residual solvents *(Table 2)* should be limited in drug substances, excipients, and drug products because of the inherent toxicities of the residual solvents. PDEs are given to the nearest 0.1 mg per day, and concentrations are given to the nearest 10 ppm. The stated values do not reflect the necessary analytical precision of the determination procedure. Precision should be determined as part of the procedure validation.

If Class 2 residual solvents are present at greater than their *Option 1* limits, they should be identified and quantified. The procedures described in the section *Identification, Control, and Quantification of Residual Solvents* in this general chapter are to be applied wherever possible. Otherwise an appropriate validated procedure is to be employed. [NOTE—The following Class 2 residual solvents are not readily detected by the headspace injection conditions described in the section *Identification, Control, and Quantification of Residual Solvents* in this general chapter: formamide, 2-ethoxyethanol, 2-methoxyethanol, ethylene gly-

col, *N*-methylpyrrolidone, and sulfolane. Other appropriate validated procedures are to be employed for the quantification of these residual solvents. Such procedures shall be submitted to the USP for review and possible inclusion in the relevant individual monograph. In addition, USP Residual Solvent Class 2—Mixture C RS can be used to develop an alternative procedure.]

Table 2. Class 2 Residual Solvents

Solvent	PDE (mg/day)	Concentration Limit (ppm)
Acetonitrile	4.1	410
Chlorobenzene	3.6	360
Chloroform	0.6	60
Cumene	0.7	70
Cyclohexane	38.8	3880
1,2-Dichloroethene	18.7	1870
1,2-Dimethoxyethane	1.0	100
N,N-Dimethylacetamide	10.9	1090
N,N-Dimethylformamide	8.8	880
1,4-Dioxane	3.8	380
2-Ethoxyethanol	1.6	160
Ethylene glycol	6.2	620
Formamide	2.2	220
Hexane	2.9	290
Methanol	30.0	3000
2-Methoxyethanol	0.5	50
Methylbutylketone	0.5	50
Methylcyclohexane	11.8	1180
Methylene chloride	6.0	600
N-Methylpyrrolidone	5.3	530
Nitromethane	0.5	50
Pyridine	2.0	200
Sulfolane	1.6	160
Tetrahydrofuran	7.2	720
Tetralin	1.0	100
Toluene	8.9	890
Trichloroethylene	0.8	80
Xylene*	21.7	2170

* Usually 60% *m*-xylene, 14% *p*-xylene, 9% *o*-xylene with 17% ethyl benzene.

Class 3

Class 3 residual solvents *(Table 3)* may be regarded as less toxic and of lower risk to human health than Class 1 and Class 2 residual solvents. Class 3 includes no solvent known as a human health hazard at levels normally accepted in pharmaceuticals. However, there are no long-term toxicity or carcinogenicity studies for many of the residual solvents in Class 3. Available data indicate that they are less toxic in acute or short-term studies and negative in genotoxicity studies.

It is considered that amounts of these residual solvents of 50 mg per day or less (corresponding to 5000 ppm or 0.5% under *Option 1*) would be acceptable without justification. Higher amounts may also be acceptable, provided that they are realistic in relation to manufacturing capability and good manufacturing practice. For the purposes of this Pharmacopeia, when a manufacturer has received approval from a competent regulatory authority for such a higher level of residual solvent, it is the responsibility of that manufacturer to notify the USP regarding the identity of this solvent and the approved residual solvent limit in the article. The USP will then address this topic in the individual monograph. If a Class 3 solvent limit in an individual monograph is greater than 50 mg per day, that residual solvent should be identified and quantified. The procedures described in the section *Identification, Control, and Quantification of Residual Solvents* in this general chapter, with appropriate modifications to the standard solutions, are to be applied wherever possible. Otherwise, an appropriate validated procedure is to be employed.

Table 3. Class 3 Residual Solvents

(Limited by GMP or other quality-based requirements in drug substances, excipients, and drug products)

Acetic acid	Heptane
Acetone	Isobutyl acetate
Anisole	Isopropyl acetate

Table 3. Class 3 Residual Solvents
(Limited by GMP or other quality-based requirements in drug substances, excipients, and drug products) *(Continued)*

1-Butanol	Methyl acetate
2-Butanol	3-Methyl-1-butanol
Butyl acetate	Methylethylketone
tert-Butylmethyl ether	Methylisobutylketone
	2-Methyl-1-propanol
Dimethyl sulfoxide	Pentane
Ethanol	1-Pentanol
Ethyl acetate	1-Propanol
Ethyl ether	2-Propanol
Ethyl formate	Propyl acetate
Formic acid	

Other Residual Solvents

The residual solvents listed in *Table 4* may also be of interest to manufacturers of drug substances, excipients, or drug products. However, no adequate toxicological data on which to base a PDE was found.

Table 4. Other Residual Solvents
(For which no adequate toxicological data was found)

1,1-Diethoxypropane	Methyl isopropyl ketone
1,1-Dimethoxymethane	Methyltetrahydrofuran
2,2-Dimethoxypropane	Solvent hexane
Isooctane	Trichloroacetic acid
Isopropyl ether	Trifluoroacetic acid

IDENTIFICATION, CONTROL, AND QUANTIFICATION OF RESIDUAL SOLVENTS

Whenever possible, the substance under test needs to be dissolved to release the residual solvent. Because the USP deals with drug products, as well as active ingredients and excipients, it may be acceptable that in some cases, some of the components of the formulation will not dissolve completely. In those cases, the drug product may first need to be pulverized into a fine powder so that any residual solvent that may be present can be released. This operation should be performed as fast as possible to prevent the loss of volatile solvents during the procedure.

[NOTE—The organic-free water specified in the following procedures produces no significantly interfering peaks when chromatographed.]

Class 1 and Class 2 Residual Solvents

The following procedures are useful to identify and quantify residual solvents when the information regarding which solvents are likely to be present in the material is not available. When the information about the presence of specific residual solvents is available, only *Procedure C* is needed to quantify the amount of residual solvents present. A flow diagram for the application of the residual solvent limit tests is shown in *Figure 1*.

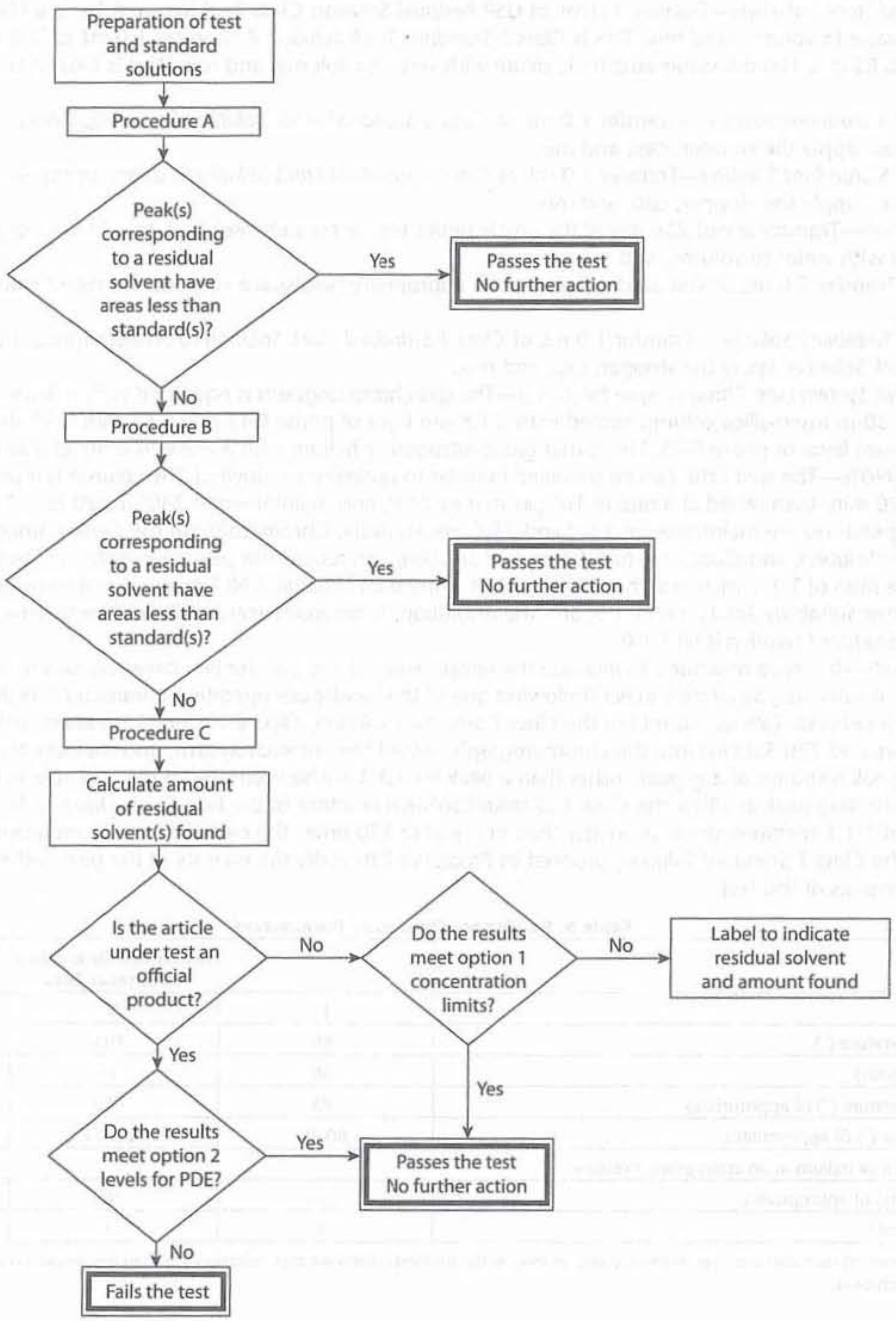

Figure 1. Diagram relating to the identification of residual solvents and the application of limit tests.

WATER-SOLUBLE ARTICLES

Procedure A

Class 1 Standard Stock Solution—[NOTE—When transferring solutions, place the tip of the pipet just below the surface of the liquid, and mix.] Transfer 1.0 mL of USP Class 1 Residual Solvents Mixture RS to a 100-mL volumetric flask, previously filled with about 9 mL of dimethyl sulfoxide, dilute with water to volume, and mix. Transfer 1.0 mL of this solution to a 100-mL volumetric flask, previously filled with about 50 mL of water, dilute with water to volume, and mix. Transfer 10 mL of this solution to a 100-mL volumetric flask, previously filled with about 50 mL of water, dilute with water to volume, and mix.

Class 1 Standard Solution—Transfer 1.0 mL of *Class 1 Standard Stock Solution* to an appropriate headspace vial containing 5.0 mL of water (place the tip of the pipet just below the surface of the liquid for dispensing), apply the stopper, cap, and mix.

General Chapters

Class 2 Standard Stock Solutions—Transfer 1.0 mL of USP Residual Solvents Class 2—Mixture A RS to a 100-mL volumetric flask, dilute with water to volume, and mix. This is *Class 2 Standard Stock Solution A*. Transfer 1.0 mL of USP Residual Solvents Class 2—Mixture B RS to a 100-mL volumetric flask, dilute with water to volume, and mix. This is *Class 2 Standard Stock Solution B*.

Class 2 Mixture A Standard Solution—Transfer 1.0 mL of *Class 2 Standard Stock Solution A* to an appropriate headspace vial, add 5.0 mL of water, apply the stopper, cap, and mix.

Class 2 Mixture B Standard Solution—Transfer 5.0 mL of *Class 2 Standard Stock Solution B* to an appropriate headspace vial, add 1.0 mL of water, apply the stopper, cap, and mix.

Test Stock Solution—Transfer about 250 mg of the article under test, accurately weighed, to a 25-mL volumetric flask, dissolve in and dilute with water to volume, and mix.

Test Solution—Transfer 5.0 mL of *Test Stock Solution* to an appropriate headspace vial, add 1.0 mL of water, apply the stopper, cap, and mix.

Class 1 System Suitability Solution—Transfer 1.0 mL of *Class 1 Standard Stock Solution* to an appropriate headspace vial, add 5.0 mL of *Test Stock Solution*, apply the stopper, cap, and mix.

Chromatographic System (see *Chromatography* ⟨621⟩)—The gas chromatograph is equipped with a flame-ionization detector and a 0.32-mm × 30-m fused-silica column coated with a 1.8-µm layer of phase G43 or a 0.53-mm × 30-m wide-bore column coated with a 3.0-µm layer of phase G43. The carrier gas is nitrogen or helium with a linear velocity of about 35 cm/s, and a split ratio of 1:5. [NOTE—The split ratio can be modified in order to optimize sensitivity.] The column temperature is maintained at 40° for 20 min, then raised at a rate of 10° per min to 240°, and maintained at 240° for 20 min. The injection port and detector temperatures are maintained at 140° and 250°, respectively. Chromatograph the *Class 1 Standard Solution, Class 1 System Suitability Solution*, and *Class 2 Mixture A Standard Solution*, and record the peak responses as directed for *Procedure*: the signal-to-noise ratio of 1,1,1-trichloroethane in the *Class 1 Standard Solution* is NLT 5; the signal-to-noise ratio of each peak in the *Class 1 System Suitability Solution* is NLT 3; and the resolution, *R*, between acetonitrile and methylene chloride in the *Class 2 Mixture A Standard Solution* is NLT 1.0.

Procedure—[NOTE—It is recommended to increase the temperature of the transfer line between runs to eliminate any potential condensation of solvents.] Separately inject (following one of the headspace operating parameter sets described in *Table 5*) equal volumes of headspace (about 1.0 mL) of the *Class 1 Standard Solution, Class 2 Mixture A Standard Solution, Class 2 Mixture B Standard Solution*, and *Test Solution* into the chromatograph, record the chromatograms, and measure the responses for the major peaks. If a peak response of any peak, other than a peak for 1,1,1-trichloroethane, in the *Test Solution* is greater than or equal to a corresponding peak in either the *Class 1 Standard Solution* or either of the two *Class 2 Mixture Standard Solutions*, or a peak response of 1,1,1-trichloroethane is greater than or equal to 150 times the peak response corresponding to 1,1,1-trichloroethane in the *Class 1 Standard Solution*, proceed to *Procedure B* to verify the identity of the peak; otherwise the article meets the requirements of this test.

Table 5. Headspace Operating Parameters

	Headspace Operating Parameter Sets		
	1	**2**	**3**
Equilibration temperature (°)	80	105	80
Equilibration time (min)	60	45	45
Transfer-line temperature (°) (if appropriate)	85	110	105
Syringe temperature (°) (if appropriate)	80–90	105–115	80–90
Carrier gas: nitrogen or helium at an appropriate pressure			
Pressurization time(s) (if appropriate)	≥60	≥60	≥60
Injection volume (mL)*	1	1	1

* Or follow the instrument manufacturer's recommendations, as long as the method criteria are met. Injecting less than this amount is allowed as long as adequate sensitivity is achieved.

Procedure B

Class 1 Standard Stock Solution, Class 1 Standard Solution, Class 2 Standard Stock Solutions, Class 2 Mixture A Standard Solution, Class 2 Mixture B Standard Solution, Test Stock Solution, Test Solution, and *Class 1 System Suitability Solution*—Prepare as directed for *Procedure A*.

Chromatographic System (see *Chromatography* ⟨621⟩)—The gas chromatograph is equipped with a flame-ionization detector and a 0.32-mm × 30-m fused-silica column coated with a 0.25-µm layer of phase G16 or a 0.53-mm × 30-m wide-bore column coated with a 0.25-µm layer of phase G16. The carrier gas is nitrogen or helium with a linear velocity of about 35 cm/s and a split ratio of 1:5. [NOTE—The split ratio can be modified in order to optimize sensitivity.] The column temperature is maintained at 50° for 20 min, then raised at a rate of 6° per min to 165°, and maintained at 165° for 20 min. The injection port and detector temperatures are maintained at 140° and 250°, respectively. Chromatograph the *Class 1 Standard Solution* and the *Class 1 System Suitability Solution*, and record the peak responses as directed for *Procedure*: the signal-to-noise ratio of benzene in the *Class 1 Standard Solution* is NLT 5; the signal-to-noise ratio of each peak in the *Class 1 System Suitability Solution*

is NLT 3; and the resolution, *R*, between acetonitrile and *cis*-dichloroethene in the *Class 2 Mixture A Standard Solution* is NLT 1.0.

Procedure—[NOTE—It is recommended to increase the temperature of the transfer line between runs to eliminate any potential condensation of solvents.] Separately inject (following one of the headspace operating parameter sets described in *Table 5*) equal volumes of headspace (about 1.0 mL) of the *Class 1 Standard Solution, Class 2 Mixture A Standard Solution, Class 2 Mixture B Standard Solution*, and the *Test Solution* into the chromatograph, record the chromatograms, and measure the responses for the major peaks. If the peak response(s) in the *Test Solution* of the peak(s) identified in *Procedure A* is/are greater than or equal to a corresponding peak(s) in either the *Class 1 Standard Solution* or either of the two *Class 2 Mixture Standard Solutions*, proceed to *Procedure C* to quantify the peak(s); otherwise the article meets the requirements of this test.

Procedure C

Class 1 Standard Stock Solution, Class 1 Standard Solution, Class 2 Standard Stock Solution A, Class 2 Mixture A Standard Solution, Test Stock Solution, Test Solution, and *Class 1 System Suitability Solution*—Prepare as directed for *Procedure A*.

Standard Stock Solution—[NOTE—Prepare a separate *Standard Stock Solution* for each peak identified and verified by *Procedures A* and *B*. For the Class 1 solvents other than 1,1,1-trichloroethane, prepare the first dilution as directed for the first dilution under *Class 1 Standard Stock Solution* in *Procedure A*.] Transfer an accurately measured volume of each individual USP Reference Standard corresponding to each residual solvent peak identified and verified by *Procedures A* and *B* to a suitable container, and dilute quantitatively, and stepwise if necessary, with water to obtain a solution having a final concentration of 1/20 of the value stated in *Table 1* or *Table 2* (under *Concentration Limit*).

Standard Solution—Transfer 1.0 mL of this solution to an appropriate headspace vial, add 5.0 mL of water, apply the stopper, cap, and mix.

Spiked Test Solution—[NOTE—Prepare a separate *Spiked Test Solution* for each peak identified and verified by *Procedures A* and *B*.] Transfer 5.0 mL of *Test Stock Solution* to an appropriate headspace vial, add 1.0 mL of the *Standard Stock Solution*, apply the stopper, cap, and mix.

Chromatographic System (see *Chromatography* ⟨621⟩)—[NOTE—If the results of the chromatography from *Procedure A* are found to be inferior to those found with *Procedure B*, the *Chromatographic System* from *Procedure B* may be substituted.] The gas chromatograph is equipped with a flame-ionization detector and a 0.32-mm × 30-m fused-silica column coated with a 1.8-µm layer of phase G43 or a 0.53-mm × 30-m wide-bore column coated with a 3.0-µm layer of phase G43. The carrier gas is nitrogen or helium with a linear velocity of about 35 cm/s, and a split ratio of 1:5. [NOTE—The split ratio can be modified in order to optimize sensitivity.] The column temperature is maintained at 40° for 20 min, then raised at a rate of 10° per min to 240°, and maintained at 240° for 20 min. The injection port and detector temperatures are maintained at 140° and 250°, respectively. Chromatograph the *Class 1 Standard Solution*, the *Class 1 System Suitability Solution*, and the *Class 2 Mixture A Standard Solution*, and record the peak responses as directed for *Procedure*: the signal-to-noise ratio of 1,1,1-trichloroethane in the *Class 1 Standard Solution* is NLT 5; the signal-to-noise ratio of each peak in the *Class 1 System Suitability Solution* is NLT 3; and the resolution, *R*, between acetonitrile and methylene chloride in the *Class 2 Mixture A Standard Solution* is NLT 1.0.

Procedure—[NOTE—It is recommended to increase the temperature of the transfer line between runs to eliminate any potential condensation of solvents.] Separately inject (following one of the headspace operating parameters described in *Table 5*) equal volumes of headspace (about 1.0 mL) of the *Standard Solution, Test Solution*, and the *Spiked Test Solution* into the chromatograph, record the chromatograms, and measure the responses for the major peaks. Calculate the amount, in ppm, of each residual solvent found in the article under test by the formula:

$$5(C/W)[r_U/(r_{ST} - r_U)]$$

in which C is the concentration, in µg per mL, of the appropriate USP Reference Standard in the *Standard Stock Solution*; *W* is the weight, in g, of the article under test taken to prepare the *Test Stock Solution*; and r_U and r_{ST} are the peak responses of each residual solvent obtained from the *Test Solution* and the *Spiked Test Solution*, respectively.

WATER-INSOLUBLE ARTICLES

Procedure A—[NOTE—Dimethyl sulfoxide may be substituted as an alternative solvent to dimethylformamide.]

Class 1 Standard Stock Solution—Transfer 1.0 mL of USP Class 1 Residual Solvents Mixture RS to a 100-mL volumetric flask previously filled with about 80 mL of dimethylformamide, dilute with dimethylformamide to volume, and mix. Transfer 1.0 mL of this solution to a 100-mL volumetric flask, previously filled with about 80 mL of dimethylformamide, dilute with dimethylformamide to volume, and mix (reserve a portion of this solution for the *Class 1 System Suitability Solution*). Transfer 1.0 mL of this solution to a 10-mL volumetric flask, dilute with dimethylformamide to volume, and mix.

Class 1 Standard Solution—Transfer 1.0 mL of *Class 1 Standard Stock Solution* to an appropriate headspace vial, containing 5.0 mL of water, apply the stopper, cap, and mix.

Class 2 Standard Stock Solutions—Transfer 1.0 mL of USP Residual Solvents Class 2—Mixture A RS to a 100-mL volumetric flask, previously filled with about 80 mL of dimethylformamide, dilute with dimethylformamide to volume, and mix. This is *Class 2 Standard Stock Solution A*. Transfer 0.5 mL of USP Residual Solvents Class 2—Mixture B RS to a 10-mL volumetric flask, dilute with dimethylformamide to volume, and mix. This is *Class 2 Standard Stock Solution B*.

Class 2 Mixture A Standard Solution—Transfer 1.0 mL of *Class 2 Standard Stock Solution A* to an appropriate headspace vial containing 5.0 mL of water, apply the stopper, cap, and mix.

Class 2 Mixture B Standard Solution—Transfer 1.0 mL of *Class 2 Standard Stock Solution B* to an appropriate headspace vial containing 5.0 mL of water, apply the stopper, cap, and mix.

Test Stock Solution—Transfer about 500 mg of the article under test, accurately weighed, to a 10-mL volumetric flask, dissolve in and dilute with dimethylformamide to volume, and mix.

Test Solution—Transfer 1.0 mL of *Test Stock Solution* to an appropriate headspace vial, containing 5.0 mL of water, apply the stopper, cap, and mix.

Class 1 System Suitability Solution—Mix 5 mL of *Test Stock Solution* with 0.5 mL of the intermediate dilution reserved from *Class 1 Standard Stock Solution*. Transfer 1.0 mL of this solution to an appropriate headspace vial, containing 5.0 mL of water, apply the stopper, cap, and mix.

Chromatographic System (see *Chromatography* ⟨621⟩)—The gas chromatograph is equipped with a flame-ionization detector and a 0.53-mm × 30-m wide-bore column coated with a 3.0-µm layer of phase G43. The carrier gas is helium with a linear velocity of about 35 cm/s and a split ratio of 1:3. [Note—The split ratio can be modified in order to optimize sensitivity.] The column temperature is maintained at 40° for 20 min, then raised at a rate of 10° per min to 240°, and maintained at 240° for 20 min. The injection port and detector temperatures are maintained at 140° and 250°, respectively. Chromatograph the *Class 1 Standard Solution, Class 1 System Suitability Solution,* and *Class 2 Mixture A Standard Solution*, and record the peak responses as directed for *Procedure*: the signal-to-noise ratio of 1,1,1-trichloroethane in the *Class 1 Standard Solution* is NLT 5; the signal-to-noise ratio of each peak in the *Class 1 System Suitability Solution* is NLT 3; and the resolution, *R*, between acetonitrile and methylene chloride in the *Class 2 Mixture A Standard Solution* is NLT 1.0.

Procedure—[Note—It is recommended to increase the temperature of the transfer line between runs to eliminate any potential condensation of solvents.] Separately inject (use headspace operating parameters in column 3 of *Table 5* with a vial pressure of 10 psi) equal volumes of headspace (about 1.0 mL) of the *Class 1 Standard Solution, Class 2 Mixture A Standard Solution, Class 2 Mixture B Standard Solution,* and *Test Solution* into the chromatograph, record the chromatograms, and measure the responses for the major peaks. If a peak response of any peak, other than a peak for 1,1,1-trichloroethane, in the *Test Solution* is greater than or equal to a corresponding peak in either the *Class 1 Standard Solution* or either of the two *Class 2 Mixture Standard Solutions,* or a peak response of 1,1,1-trichloroethane is greater than or equal to 150 times the peak response corresponding to 1,1,1-trichloroethane in the *Class 1 Standard Solution,* proceed to *Procedure B* to verify the identity of the peak; otherwise, the article meets the requirements of this test.

General Chapters

Procedure B

Class 1 Standard Stock Solution, Class 1 Standard Solution, Class 1 System Suitability Solution, Class 2 Standard Stock Solutions, Class 2 Mixture A Standard Solution, and *Class 2 Mixture B Standard Solution, Test Stock Solution,* and *Test Solution*—Proceed as directed for *Procedure A.*

Chromatographic System—Proceed as directed for *Procedure B* under *Water-Soluble Articles* with a split ratio of 1:3. [Note—The split ratio can be modified in order to optimize sensitivity.]

Procedure—[Note—It is recommended to increase the temperature of the transfer line between runs to eliminate any potential condensation of solvents.] Separately inject (use headspace operating parameters in column 3 of *Table 5* with a vial pressure of 10 psi) equal volumes of headspace (about 1.0 mL) of the *Class 1 Standard Solution, Class 2 Mixture A Standard Solution, Class 2 Mixture B Standard Solution,* and *Test Solution* into the chromatograph, record the chromatograms, and measure the responses for the major peaks. If the peak response(s) in *Test Solution* of the peak(s) identified in *Procedure A* is/are greater than or equal to a corresponding peak(s) in either the *Class 1 Standard Solution* or any of the two *Class 2 Mixture Standard Solutions,* proceed to *Procedure C* to quantify the peak(s); otherwise, the article meets the requirements of this test.

Procedure C

Class 1 Standard Stock Solution, Class 1 Standard Solution, Class 1 System Suitability Solution, Class 2 Standard Stock Solution A, and *Class 2 Mixture A Standard Solution*—Proceed as directed for *Procedure A.*

Standard Stock Solution—[Note—Prepare a separate *Standard Stock Solution* for each peak identified and verified by *Procedures A* and *B*. For the Class 1 solvents other than 1,1,1-trichloroethane, prepare the first dilution as directed for the first dilution under *Class 1 Standard Stock Solution* in *Procedure A*.] Transfer an accurately measured volume of each individual USP Reference Standard corresponding to each residual solvent peak identified and verified by *Procedures A* and *B* to a suitable container, and dilute quantitatively, and stepwise if necessary, with water to obtain a solution having a final concentration of 1/20 of the value stated in *Table 1* or *Table 2* (under *Concentration Limit*).

Standard Solution—Transfer 1.0 mL of the *Standard Stock Solution* to an appropriate headspace vial, containing 5.0 mL of water, apply the stopper, cap, and mix.

Test Stock Solution—Proceed as directed for *Procedure A.*

Test Solution—Transfer 1.0 mL of the *Test Stock Solution* to an appropriate headspace vial, containing 5.0 mL of water, apply the stopper, cap, and mix.

Spiked Test Solution—[Note—Prepare a separate *Spiked Test Solution* for each peak identified and verified by *Procedures A* and *B*.] Transfer 1.0 mL of *Test Stock Solution* to an appropriate headspace vial, add 1 mL of *Standard Stock Solution* and 4.0 mL of water, apply the stopper, cap, and mix.

Chromatographic System—Proceed as directed for *Procedure C* under *Water-Soluble Articles.*

Procedure—[Note—It is recommended to increase the temperature of the transfer line between runs to eliminate any potential condensation of solvents.] Separately inject (use headspace operating parameters in column 3 of *Table 5* with a vial pressure of 10 psi) equal volumes of headspace (about 1.0 mL) of the *Standard Solution, Test Solution,* and *Spiked Test Solution* into

the chromatograph, record the chromatograms, and measure the responses for the major peaks. Calculate the amount, in ppm, of each residual solvent found in the article under test by the formula:

$$10 \times (C/W)[r_U/(r_{ST} - r_U)]$$

in which C is the concentration, in µg per mL, of the appropriate USP Reference Standard in the *Standard Stock Solution*; W is the weight, in g, of the article under test taken to prepare the *Test Stock Solution*; and r_U and r_{ST} are the peak responses of each residual solvent obtained from *Test Solution* and *Spiked Test Solution*, respectively.

Class 3 Residual Solvents

If Class 3 solvents are present, the level of residual solvents may be determined as directed under *Loss on Drying* ⟨731⟩ when the monograph for the article under test contains a loss on drying procedure specifying an upper limit of no more than 0.5% (per *Option 1* in this general chapter), or a specific determination of the solvent may be made. If there is no loss on drying procedure in the monograph for the article under test or if a Class 3 solvent limit in an individual monograph is greater than 50 mg per day (corresponding to 5000 ppm or 0.5% under *Option 1*), the individual Class 3 residual solvent or solvents present in the article under test should be identified and quantified, and the procedures as described above, with appropriate modifications to the standard solutions, are to be applied wherever possible. Otherwise, an appropriate validated procedure is to be employed. USP Reference Standards, where available, should be used in these procedures.

GLOSSARY

Acceptable daily intake (ADI): The maximum acceptable intake of toxic chemicals per day. This term is used by the World Health Organization (WHO).
Genotoxic carcinogens: Carcinogens that produce cancer by affecting genes or chromosomes.
Lowest-observed-effect level (LOEL): The lowest dose of a substance in a study or group of studies that produces biologically significant increases in frequency or severity of any effects in exposed humans or animals.
Modifying factor: A factor determined by professional judgment of a toxicologist and applied to bioassay data so that the data can be safely related to humans.
Neurotoxicity: The ability of a substance to cause adverse effects on the nervous system.
No-observed-effect level (NOEL): The highest dose of a substance at which there are no biologically significant increases in frequency or severity of any effects in exposed humans or animals.
Permitted daily exposure (PDE): The maximum acceptable intake per day of a residual solvent in pharmaceutical products.
Reversible toxicity: The occurrence of harmful effects that are caused by a substance and that disappear after exposure to the substance ends.
Strongly suspected human carcinogen: A substance for which there is no epidemiological evidence of carcinogenesis but for which there are positive genotoxicity data and clear evidence of carcinogenesis in rodents.
Teratogenicity: The occurrence of structural malformations in a developing fetus when a substance is administered during pregnancy.
Tolerable daily intake (TDI): Tolerable daily exposure to toxic chemicals. Term used by the International Program on Chemical Safety (IPCS).

APPENDICES

Appendix 1: List

See the table *Appendix 1. List of Residual Solvents Included in This General Chapter.*

APPENDIX 1. LIST OF RESIDUAL SOLVENTS INCLUDED IN THIS GENERAL CHAPTER

Solvent	Other Names	Structure	Class
Acetic acid	Ethanoic acid	CH_3COOH	Class 3
Acetone	2-Propanone Propan-2-one	CH_3COCH_3	Class 3
Acetonitrile		CH_3CN	Class 2
Anisole	Methoxybenzene	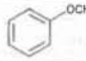	Class 3
Benzene	Benzol		Class 1

* Usually 60% *m*-xylene, 14% *p*-xylene, 9% *o*-xylene with 17% ethyl benzene.

APPENDIX 1. LIST OF RESIDUAL SOLVENTS INCLUDED IN THIS GENERAL CHAPTER *(Continued)*

Solvent	Other Names	Structure	Class
1-Butanol	*n*-Butyl alcohol Butan-1-ol	$CH_3(CH_2)_3OH$	Class 3
2-Butanol	*sec*-Butyl alcohol Butan-2-ol	$CH_3CH_2CH(OH)CH_3$	Class 3
Butyl acetate	Acetic acid butyl ester	$CH_3COO(CH_2)_3CH_3$	Class 3
tert-Butylmethyl ether	2-Methoxy-2-methylpropane	$(CH_3)_3COCH_3$	Class 3
Carbon tetrachloride	Tetrachloromethane	CCl_4	Class 1
Chlorobenzene		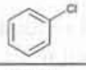	Class 2
Chloroform	Trichloromethane	$CHCl_3$	Class 2
Cumene	Isopropylbenzene (1-Methylethyl)benzene	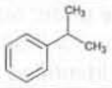	Class 2
Cyclohexane	Hexamethylene		Class 2
1,2-Dichloroethane	*sym*-Dichloroethane Ethylene dichloride Ethylene chloride	CH_2ClCH_2Cl	Class 1
1,1-Dichloroethene	1,1-Dichloroethylene Vinylidene chloride	$H_2C{=}CCl_2$	Class 1
1,2-Dichloroethene	1,2-Dichloroethylene Acetylene dichloride	$ClHC{=}CHCl$	Class 2
1,2-Dimethoxyethane	Ethyleneglycol dimethyl ether Monoglyme Dimethyl cellosolve	$H_3COCH_2CH_2OCH_3$	Class 2
N,N-Dimethylacetamide	DMA	$CH_3CON(CH_3)_2$	Class 2
N,N-Dimethylformamide	DMF	$HCON(CH_3)_2$	Class 2
Dimethyl sulfoxide	Methylsulfinylmethane Methyl sulfoxide DMSO	$(CH_3)_2SO$	Class 3
1,4-Dioxane	*p*-Dioxane [1,4]Dioxane		Class 2
Ethanol	Ethyl alcohol	CH_3CH_2OH	Class 3
2-Ethoxyethanol	Cellosolve	$CH_3CH_2OCH_2CH_2OH$	Class 2
Ethyl acetate	Acetic acid ethyl ester	$CH_3COOCH_2CH_3$	Class 3
Ethylene glycol	1,2-Dihydroxyethane 1,2-Ethanediol	$HOCH_2CH_2OH$	Class 2
Ethyl ether	Diethyl ether Ethoxyethane 1,1′-Oxybisethane	$CH_3CH_2OCH_2CH_3$	Class 3
Ethyl formate	Formic acid ethyl ester	$HCOOCH_2CH_3$	Class 3
Formamide	Methanamide	$HCONH_2$	Class 2
Formic acid		$HCOOH$	Class 3
Heptane	*n*-Heptane	$CH_3(CH_2)_5CH_3$	Class 3
Hexane	*n*-Hexane	$CH_3(CH_2)_4CH_3$	Class 2
Isobutyl acetate	Acetic acid isobutyl ester	$CH_3COOCH_2CH(CH_3)_2$	Class 3
Isopropyl acetate	Acetic acid isopropyl ester	$CH_3COOCH(CH_3)_2$	Class 3
Methanol	Methyl alcohol	CH_3OH	Class 2
2-Methoxyethanol	Methyl cellosolve	$CH_3OCH_2CH_2OH$	Class 2
Methyl acetate	Acetic acid methyl ester	CH_3COOCH_3	Class 3
3-Methyl-1-butanol	Isoamyl alcohol Isopentyl alcohol 3-Methylbutan-1-ol	$(CH_3)_2CHCH_2CH_2OH$	Class 3

* Usually 60% *m*-xylene, 14% *p*-xylene, 9% *o*-xylene with 17% ethyl benzene.

APPENDIX 1. LIST OF RESIDUAL SOLVENTS INCLUDED IN THIS GENERAL CHAPTER *(Continued)*

Solvent	Other Names	Structure	Class
Methylbutylketone	2-Hexanone Hexan-2-one	$CH_3(CH_2)_3COCH_3$	Class 2
Methylcyclohexane	Cyclohexylmethane	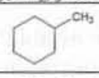	Class 2
Methylene chloride	Dichloromethane	CH_2Cl_2	Class 2
Methylethylketone	2-Butanone MEK Butan-2-one	$CH_3CH_2COCH_3$	Class 3
Methyl isobutyl ketone	4-Methylpentan-2-one 4-Methyl-2-pentanone MIBK	$CH_3COCH_2CH(CH_3)_2$	Class 3
2-Methyl-1-propanol	Isobutyl alcohol 2-Methylpropan-1-ol	$(CH_3)_2CHCH_2OH$	Class 3
N-Methylpyrrolidone	1-Methylpyrrolidin-2-one 1-Methyl-2-pyrrolidinone	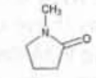	Class 2
Nitromethane		CH_3NO_2	Class 2
Pentane	*n*-Pentane	$CH_3(CH_2)_3CH_3$	Class 3
1-Pentanol	Amyl alcohol Pentan-1-ol Pentyl alcohol	$CH_3(CH_2)_3CH_2OH$	Class 3
1-Propanol	Propan-1-ol Propyl alcohol	$CH_3CH_2CH_2OH$	Class 3
2-Propanol	Propan-2-ol Isopropyl alcohol	$(CH_3)_2CHOH$	Class 3
Propyl acetate	Acetic acid propyl ester	$CH_3COOCH_2CH_2CH_3$	Class 3
Pyridine			Class 2
Sulfolane	Tetrahydrothiophene 1,1-dioxide		Class 2
Tetrahydrofuran	Tetramethylene oxide Oxacyclopentane		Class 2
Tetralin	1,2,3,4-Tetrahydronaphthalene	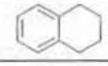	Class 2
Toluene	Methylbenzene	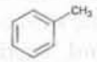	Class 2
1,1,1-Trichloroethane	Methylchloroform	CH_3CCl_3	Class 1
Trichloroethylene	1,1,2-Trichloroethene	$HClC{=}CCl_2$	Class 2
Xylene*	Dimethylbenzene Xylol	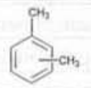	Class 2

* Usually 60% *m*-xylene, 14% *p*-xylene, 9% *o*-xylene with 17% ethyl benzene.

Appendix 2: Additional Background

ENVIRONMENTAL REGULATION OF ORGANIC VOLATILE SOLVENTS

Several of the residual solvents frequently used in the production of pharmaceuticals are listed as toxic chemicals in *Environmental Health Criteria* (EHC) monographs and in the Integrated Risk Information System (IRIS). The objectives of such groups as the International Programme on Chemical Safety (IPCS), the United States Environmental Protection Agency (EPA), and the United States Food and Drug Administration (FDA) include the determination of acceptable exposure levels. The goal is maintenance of environmental integrity and protection of human health against the possible deleterious effects of chemicals resulting from long-term environmental exposure. The procedures involved in the estimation of maximum safe exposure limits are usually based on long-term studies. When long-term study data are unavailable, shorter-term study data can be used with modification of the approach, such as use of larger safety factors. The approach described therein relates primarily to long-

term or lifetime exposure of the general population in the ambient environment (i.e., ambient air, food, drinking water, and other media).

RESIDUAL SOLVENTS IN PHARMACEUTICALS

Exposure limits in this general chapter are established by referring to methodologies and toxicity data described in EHC and IRIS monographs. However, the following specific assumptions about residual solvents to be used in the synthesis and formulation of pharmaceutical products should be taken into account in establishing exposure limits.

1. Patients (not the general population) use pharmaceuticals to treat their diseases or for prophylaxis to prevent infection or disease.
2. The assumption of lifetime patient exposure is not necessary for most pharmaceutical products but may be appropriate as a working hypothesis to reduce risk to human health.
3. Residual solvents are unavoidable components in pharmaceutical production and will often be a part of medicinal products.
4. Residual solvents should not exceed recommended levels except in exceptional circumstances.
5. Data from toxicological studies that are used to determine acceptable levels for residual solvents should have been generated using appropriate protocols such as those described, for example, by the Organization for Economic Cooperation and Development (OECD), EPA, and the FDA *Red Book*.

Appendix 3: Procedures for Establishing Exposure Limits

The Gaylor-Kodell method of risk assessment (Gaylor, D.W., and Kodell, R.L. Linear Interpolation Algorithm for Low Dose Assessment of Toxic Substance. *Journal of Environmental Pathology and Toxicology*, 4:305, 1980) is appropriate for Class 1 carcinogenic solvents. Only in cases where reliable carcinogenicity data are available should extrapolation by the use of mathematical models be applied to setting exposure limits. Exposure limits for Class 1 residual solvents could be determined with the use of a large safety factor (i.e., 10,000 to 100,000) with respect to the no-observed-effect level (NOEL). Detection and quantification of these residual solvents should be performed by state-of-the-art analytical techniques.

Acceptable exposure levels in this general chapter for Class 2 residual solvents were established by calculation of PDE values according to the procedures for setting exposure limits in pharmaceuticals (page 5748 of *PF* 15(6) [Nov.–Dec. 1989]), and the method adopted by IPCS for Assessing Human Health Risk of Chemicals (*Environmental Health Criteria 170*, WHO, 1994). These procedures are similar to those used by the U.S. EPA (IRIS) and the U.S. FDA *(Red Book)* and others. The method is outlined here to give a better understanding of the origin of the PDE values. It is not necessary to perform these calculations in order to use the PDE values presented in *Table 2* of this document.

PDE is derived from the no-observed-effect level (NOEL), or the lowest-observed effect level (LOEL), in the most relevant animal study as follows:

$$\text{PDE} = (\text{NOEL} \times \text{Weight Adjustment})/(\text{F1} \times \text{F2} \times \text{F3} \times \text{F4} \times \text{F5}) \qquad (1)$$

The PDE is derived preferably from a NOEL. If no NOEL is obtained, the LOEL may be used. Modifying factors proposed here, for relating the data to humans, are the same kind of "uncertainty factors" used in *Environmental Health Criteria* (*Environmental Health Criteria 170*, WHO, Geneva, 1994) and "modifying factors" or "safety factors" in *Pharmacopeial Forum*. The assumption of 100 percent systemic exposure is used in all calculations regardless of route of administration.

The modifying factors are as follows:

F1 =	A factor to account for extrapolation between species	
	F1 =	2 for extrapolation from dogs to humans
	F1 =	2.5 for extrapolation from rabbits to humans
	F1 =	3 for extrapolation from monkeys to humans
	F1 =	5 for extrapolation from rats to humans
	F1 =	10 for extrapolation from other animals to humans
	F1 =	12 for extrapolation from mice to humans

F1 takes into account the comparative surface area to body weight ratios for the species concerned and for man. Surface area (*S*) is calculated as:

$$S = kM^{0.67} \qquad (2)$$

in which *M* = body weight, and the constant k has been taken to be 10. The body weights used in the equation are those shown below in *Table A3.1*.

F2 =	A factor of 10 to account for variability between individuals. A factor of 10 is generally given for all organic solvents, and 10 is used consistently in this general chapter.

F3 =	A variable factor to account for toxicity studies of short-term exposure	
	F3 =	1 for studies that last at least one half-lifetime (1 year for rodents or rabbits; 7 years for cats, dogs, and monkeys)
	F3 =	1 for reproductive studies in which the whole period of organogenesis is covered
	F3 =	2 for a 6-month study in rodents, or a 3.5-year study in nonrodents
	F3 =	5 for a 3-month study in rodents, or a 2-year study in nonrodents
	F3 =	10 for studies of a shorter duration

In all cases, the higher factor has been used for study durations between the time points (e.g., a factor of 2 for a 9-month rodent study).

F4 =	A factor that may be applied in cases of severe toxicity, e.g., nongenotoxic carcinogenicity, neurotoxicity, or teratogenicity. In studies of reproductive toxicity, the following factors are used:	
	F4 =	1 for fetal toxicity associated with maternal toxicity
	F4 =	5 for fetal toxicity without maternal toxicity
	F4 =	5 for a teratogenic effect with maternal toxicity
	F4 =	10 for a teratogenic effect without maternal toxicity

F5 =	A variable factor that may be applied if the no-effect level was not established

When only a LOEL is available, a factor of up to 10 can be used, depending on the severity of the toxicity. The weight adjustment assumes an arbitrary adult human body weight for either sex of 50 kilograms (kg). This relatively low weight provides an additional safety factor against the standard weights of 60 kg or 70 kg that are often used in this type of calculation. It is recognized that some adult patients weigh less than 50 kg; these patients are considered to be accommodated by the built-in safety factors used to determine a PDE. If the solvent was present in a formulation specifically intended for pediatric use, an adjustment for a lower body weight would be appropriate.

As an example of the application of this equation, consider a toxicity study of acetonitrile in mice that is summarized in *Pharmeuropa*, Vol. 9, No. 1, Supplement, April 1997, page S24. The NOEL is calculated to be 50.7 mg kg^{-1} day^{-1}. The PDE for acetonitrile in this study is calculated as follows:

$$PDE = (50.7\ mg\ kg^{-1}\ day^{-1} \times 50\ kg)/(12 \times 10 \times 5 \times 1 \times 1) = 4.22\ mg\ day^{-1}$$

In this example,

F1 =	12 to account for the extrapolation from mice to humans
F2 =	10 to account for differences between individual humans
F3 =	5 because the duration of the study was only 13 weeks
F4 =	1 because no severe toxicity was encountered
F5 =	1 because the no-effect level was determined

Values Used in the Calculations in This Document

Rat body weight	425 g
Pregnant rat body weight	330 g
Mouse body weight	28 g
Pregnant mouse body weight	30 g
Guinea-pig body weight	500 g
Rhesus monkey body weight	2.5 kg
Rabbit body weight (pregnant or not)	4 kg
Beagle dog body weight	11.5 kg
Rat respiratory volume	290 L/day
Mouse respiratory volume	43 L/day
Rabbit respiratory volume	1440 L/day
Guinea-pig respiratory volume	430 L/day
Human respiratory volume	28,800 L/day
Dog respiratory volume	9000 L/day
Monkey respiratory volume	1150 L/day
Mouse water consumption	5 mL/day
Rat water consumption	30 mL/day
Rat food consumption	30 g/day

The equation for an ideal gas, PV = nRT, is used to convert concentrations of gases used in inhalation studies from units of ppm to units of mg/L or mg/m³. Consider as an example the rat reproductive toxicity study by inhalation of carbon tetrachloride (molecular weight 153.84) summarized in *Pharmeuropa*, Vol. 9, No. 1, Supplement, April 1997, page S9.

$$\frac{n}{V} = \frac{P}{RT} = \frac{300 \times 10^{-6}\text{atm} \times 153\,840\ \text{mg mol}^{-1}}{0.082\ \text{L at mK}^{-1}\ \text{mol}^{-1} \times 298\text{K}} = \frac{46.15\ \text{mg}}{24.45\ \text{L}} = 1.89\ \text{mg/L}$$

The relationship 1000 L = 1 m³ is used to convert to mg/ m³.

〈469〉 ETHYLENE GLYCOL, DIETHYLENE GLYCOL, AND TRIETHYLENE GLYCOL IN ETHOXYLATED SUBSTANCES

The following procedure is used to determine the concentration of residual ethylene glycol, diethylene glycol, and triethylene glycol in ethoxylated products. Ethoxylated products may contain residual ethylene glycol, diethylene glycol, and triethylene glycol as a result of the manufacturing process. The procedure is suitable for the following substances:

1. Polyethylene glycol 200
2. Polyethylene glycol 300
3. Polyethylene glycol 400
4. Polyethylene glycol 600
5. Polyethylene glycol 1000
6. Polysorbate 20
7. Polysorbate 40
8. Polysorbate 60
9. Polysorbate 80
10. Polyethylene glycol monomethyl ether 350
11. Polyethylene glycol monomethyl ether 550
12. Polyoxyl 35 castor oil
13. Polyoxyl 15 hydroxystearate
14. Polyoxyl 20 cetostearyl ether
15. Polyoxyl 8 stearate
16. Octoxynol 9
17. Nonoxynol 9

IMPURITIES

• Procedure

Diluent: Acetone

Standard solution: 25 µg/mL of USP Ethylene Glycol RS, 40 µg/mL of USP Diethylene Glycol RS, 40 µg/mL of USP Triethylene Glycol RS, and 40 µg/mL of USP Butane-1,3-diol RS (internal standard) in *Diluent*

Sample solution: 40 mg/mL of the test substance and 40 µg/mL of USP Butane-1,3-diol RS (internal standard) in *Diluent*

Chromatographic system

(See *Chromatography* 〈621〉, *System Suitability*.)

Mode: GC

Detector: Flame ionization

Column: 0.53-mm × 30-m capillary column bonded with a 1.0-µm layer of phase G3

Temperatures

Detector: 290°

Injection port: 270°

Column: See *Table 1*.

Table 1

Initial Temperature (°)	Temperature Ramp (°/min)	Final Temperature (°)	Hold Time at Final Temperature (min)
40	10	60	5
60	10	170	0
170	15	280	0, 60[a]

[a] Hold time was 0 min for the *Standard solution* and 60 min for the *Sample solution* and *Diluent*.

Carrier gas: Helium

Flow rate: 5.0 mL/min

Injection volume: 1.0 µL
Injection type: Split injection, split ratio is 2:1
Liner: General-purpose split/splitless, tapered, glass wool, deactivated
Run time: 26 min for the *Standard solution*; 86 min for the *Sample solution* and *Diluent*

System suitability

Sample: *Standard solution*

[NOTE—See *Table 2* for the relative retention times.]

Table 2

Name	Relative Retention Time
Ethylene glycol	0.45
Butane-1,3-diol (internal standard)	1.00
Diethylene glycol	1.25
Triethylene glycol	1.70

System suitability requirements

Resolution: NLT 20 between ethylene glycol and butane-1,3-diol; NLT 20 between butane-1,3-diol and diethylene glycol; NLT 20 between diethylene glycol and triethylene glycol

Tailing factor: 0.8–1.8 for each of the four peaks assigned to ethylene glycol, butane-1,3-diol, diethylene glycol, and triethylene glycol

Relative standard deviation: NMT 5.0% for the peak response ratio of the respective glycol (ethylene glycol, diethylene glycol, or triethylene glycol) to the internal standard

Analysis

Samples: *Standard solution* and *Sample solution*

Identify the ethylene glycol, diethylene glycol, and triethylene glycol peaks in the *Sample solution* by comparison with those in the *Standard solution.*

Calculate the content of ethylene glycol, diethylene glycol, or triethylene glycol, in µg/g, in the portion of test substance taken:

$$\text{Result} = (R_U/R_S) \times (C_S/C_U) \times F$$

R_U = peak response ratio of the respective glycol to the internal standard (peak response of the respective glycol/peak response of the internal standard) from the *Sample solution*
R_S = peak response ratio of the respective glycol to the internal standard (peak response of the respective glycol/peak response of the internal standard) from the *Standard solution*
C_S = concentration of the respective glycol (ethylene glycol, diethylene glycol, or triethylene glycol) in the *Standard solution* (µg/mL)
C_U = concentration of the test substance in the *Sample solution* (mg/mL)
F = conversion factor (1000 mg/g)

ADDITIONAL REQUIREMENTS

- **USP REFERENCE STANDARDS ⟨11⟩**
  USP Butane-1,3-diol RS
  USP Diethylene Glycol RS
  USP Ethylene Glycol RS
  USP Triethylene Glycol RS

⟨471⟩ OXYGEN FLASK COMBUSTION

The oxygen flask combustion procedure is provided as the preparatory step in the determination of bromine, chlorine, iodine, selenium, and sulfur in some Pharmacopeial articles. Combustion of the material under test (usually organic) yields water-soluble inorganic products, which are analyzed for specific elements as directed in the individual monograph or general chapter.

The caution statement given for *Procedure* covers minimum safety precautions only, and serves to emphasize the need for exceptional care throughout.

APPARATUS

The apparatus[1] consists of a heavy-walled conical, deeply lipped or cupped 500-mL flask (unless a larger flask is specified), fitted with a ground-glass stopper to which is fused a test specimen carrier consisting of heavy-gauge platinum wire and a piece of welded platinum gauze measuring about 1.5 × 2 cm.

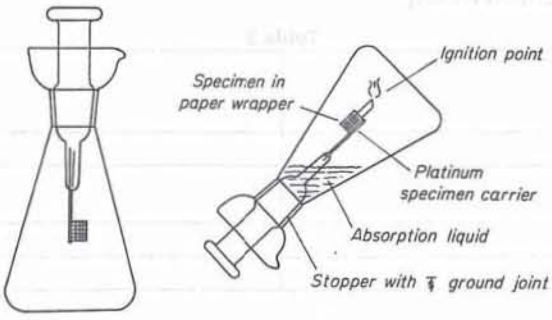

Apparatus for Oxygen Flask Combustion

PROCEDURE

[*Caution—Wear safety glasses and use a suitable safety shield between yourself and the apparatus. Exercise care to ensure that the flask is scrupulously clean and free from even traces of organic solvents.*]

Weigh the substance, if a solid, on a piece of halide-free filter paper measuring about 4 cm square, and fold the paper to enclose it. Liquid substances are weighed in tared capsules, polycarbonate capsules[1] being used for liquids in volumes not exceeding 200 µL, and gelatin capsules being satisfactory for use for larger volumes. [Note—Gelatin capsules may contain significant amounts of combined halide or sulfur. If such capsules are used, perform a blank determination, and make any necessary correction.] Place the specimen, together with a filter paper fuse-strip, in the platinum gauze specimen holder. Place the absorbing liquid specified in the individual monograph or general chapter in the flask, moisten the joint of the stopper with water, and flush the air from the flask with a stream of rapidly flowing oxygen, swirling the liquid to favor its taking up oxygen. [Note—Saturation of the liquid with oxygen is essential for the successful performance of the combustion procedure.] Ignite the fuse-strip by suitable means. If the strip is ignited outside the flask, immediately plunge the specimen holder into the flask, invert the flask so that the absorption solution makes a seal around the stopper, and hold the stopper firmly in place. If the ignition is carried out in a closed system, the inversion of the flask may be omitted. After combustion is complete, shake the flask vigorously, and allow to stand for not less than 10 minutes with intermittent shaking. Then proceed as directed in the individual monograph or general chapter.

⟨481⟩ RIBOFLAVIN ASSAY

ASSAY

Change to read:

- ▲**Chemical Methods, Procedure 1**▲USP40

The following procedure is suitable for preparations in which riboflavin is a constituent of a mixture of several ingredients. In using the procedure, keep the pH of solutions below 7.0, and protect the solutions from direct sunlight at all stages.

Standard riboflavin stock solution: To 50.0 mg of USP Riboflavin RS, previously dried and stored protected from light in a desiccator over phosphorus pentoxide, add about 300 mL of 0.02 N acetic acid, and heat the mixture on a steam bath with frequent agitation until the riboflavin has dissolved, then cool. To this solution add 0.02 N acetic acid to make 500 mL; then mix. Store the solution under toluene in a refrigerator.

Dilute an accurately measured portion of this solution by using 0.02 N acetic acid to a concentration of 10.0 µg/mL of the dried USP Riboflavin RS to obtain the *Standard riboflavin stock solution.* Store the solution under toluene in a refrigerator.

Standard solution: Dilute with water 10.0 mL of *Standard riboflavin stock solution* in a 100-mL volumetric flask to volume, and mix. Each mL represents 1.0 µg of USP Riboflavin RS. Prepare a fresh *Standard solution* for each assay.

[1] A suitable apparatus [Catalog Nos. 6513-C20 (500-ml capacity) and 6513-C30 (1000-ml capacity)] and suitable capsules [Catalog No. 6513-84 (1000 capsules)] are obtainable from Thomas Scientific, 99 High Hill Road, Swedesboro, NJ 08085.

Sample solution: Place an amount of the material to be assayed in a flask of suitable size, and add a volume of 0.1 N hydrochloric acid equal in mL to NLT 10 times the dry weight of the material in grams, but the resulting solution will contain NMT 100 µg/mL of riboflavin. If the material is not readily soluble, comminute the material so that it may be evenly dispersed in the liquid. Agitate vigorously, and wash down the sides of the flask with 0.1 N hydrochloric acid.

Heat the mixture in an autoclave at 121°–123° for 30 min, and cool. If clumping occurs, agitate the mixture until the particles are evenly dispersed. Adjust the mixture, with vigorous agitation, with sodium hydroxide solution[1] to a pH of 6.0–6.5, then add hydrochloric acid solution[1] immediately until no further precipitation occurs (usually at a pH of approximately 4.5, which is the isoelectric point of many of the proteins present). Dilute the mixture with water to make a measured volume that contains about 0.11 µg of riboflavin in each mL, and filter through paper known not to adsorb riboflavin. To an aliquot of the filtrate add, with vigorous agitation, sodium hydroxide solution[1] to produce a pH of 6.6–6.8, dilute the solution with water to make a final measured volume that contains approximately 0.1 µg of riboflavin in each mL, and if cloudiness occurs, filter again.

Instrumental conditions

(See *Fluorescence Spectroscopy* ⟨853⟩.)

Mode: Fluorescence

Excitation wavelength: 444 nm

Emission wavelength: 530 nm

Analysis

Samples: *Standard solution*, *Sample solution*, and *Blank*

To each of four or more tubes (or reaction vessels) add 10.0 mL of the *Sample solution*. To each of two or more of these tubes add 1.0 mL of the *Standard solution*, and mix; to each of two or more of the remaining tubes add 1.0 mL of water, and mix. To each tube add 1.0 mL of glacial acetic acid, mix, then add, with mixing, 0.50 mL of potassium permanganate solution (1 in 25), and allow to stand for 2 min. To each tube add, with mixing, 0.50 mL of hydrogen peroxide solution, whereupon the permanganate color is destroyed within 10 s. Shake the tubes vigorously until excess oxygen is expelled. Remove any gas bubbles remaining on the sides of the tubes after foaming has ceased by tipping the tubes so that the solution flows slowly from end to end.

Measure the fluorescence of all tubes, designating the average reading from the tubes containing only the *Sample solution* as I_U, and designating the average from the tubes containing both the *Sample solution* and the *Standard solution* as I_S. Then to each of one or more tubes of each kind add, with mixing, 20 mg of sodium hydrosulfite, and within 5 s again measure the fluorescence, designating the average reading as I_B.

Calculate the quantity, in mg, of riboflavin ($C_{17}H_{20}N_4O_6$) in each mL of the *Sample solution* taken:

$$\text{Result} = [0.0001 \times (I_U - I_B)]/(I_S - I_U)$$

I_U = average reading of the tubes containing only the *Sample solution*
I_B = average reading of fluorescence of the tubes after adding 20 mg of sodium hydrofluorite
I_S = average reading of the tubes containing both the *Sample solution* and *Standard solution*

Calculate the quantity, in mg, of riboflavin ($C_{17}H_{20}N_4O_6$) in each capsule or tablet.

Add the following:

- ▲**Chemical Methods, Procedure 2**

This procedure is suitable for the determination of riboflavin as a dietary ingredient or active pharmaceutical ingredient. [Note—Conduct the entire *Analysis* without exposure to direct sunlight.]

Standard solution: Transfer 50 mg of USP Riboflavin RS to a 1000-mL volumetric flask containing 50 mL of water. Add 5 mL of acetic acid and sufficient water to make 800 mL. Heat on a steam bath, protected from light, with frequent agitation until dissolved. Cool to 25°, and dilute with water to volume. Dilute this solution with water to bring it within the operating sensitivity of the fluorometer used.

Sample solution: Transfer 50 mg of Riboflavin to a 1000-mL volumetric flask containing 50 mL of water. Add 5 mL of acetic acid and sufficient water to make 800 mL. Heat on a steam bath, protected from light, with frequent agitation until dissolved. Cool to 25°, and dilute with water to volume. Dilute this solution with water to bring it to the same concentration as that of the *Standard solution*.

Blank: Prepare as directed for the *Sample solution*, except omit the test specimen.

Instrumental conditions

(See *Fluorescence Spectroscopy* ⟨853⟩.)

Mode: Fluorescence

Excitation wavelength: 444 nm

Emission wavelength: 530 nm

Analysis

Samples: *Standard solution*, *Sample solution*, and *Blank*

[1] The concentrations of the hydrochloric acid and sodium hydroxide solutions used are not stated in each instance, because these concentrations may be varied depending upon the amount of material taken for assay, volume of test solution, and buffering effect of material.

Measure the fluorescence intensity of the *Standard solution*. Immediately after the reading, add to the solution 10 mg of sodium hydrosulfite, stirring with a glass rod until dissolved, and at once measure the fluorescence again. [NOTE—Depending on the final concentration of riboflavin in the solution, it may be necessary to increase the amount of sodium hydrosulfite to suppress the fluorescence activity completely.] The difference between the two readings represents the fluorescence intensity (I_S) due to the *Standard solution*. Similarly, measure the fluorescence intensity (I_U) due to the *Sample solution*. Perform the blank determination, and make any necessary correction.

Calculate the percentage of riboflavin ($C_{17}H_{20}N_4O_6$) in the portion of Riboflavin taken:

$$\text{Result} = (I_U/I_S) \times (C_S/C_U) \times 100$$

I_U = fluorescence of the *Sample solution*
I_S = fluorescence of the *Standard solution*
C_S = concentration of USP Riboflavin RS in the *Standard solution* (µg/mL)
C_U = concentration of riboflavin the *Sample solution* (µg/mL)▲USP40

Add the following:

▲The following liquid chromatographic procedures are provided for the determination of riboflavin as an active pharmaceutical ingredient, a dietary supplement ingredient, or a component in the dietary supplements or pharmaceutical dosage forms. Use the appropriate USP Reference Standards.

Throughout these procedures, protect solutions containing and derived from the test specimen and the Reference Standards from the atmosphere and light, preferably by the use of low-actinic glassware.▲USP40

Add the following:

- ▲**CHROMATOGRAPHIC METHODS, PROCEDURE 1**

This procedure can be used to determine riboflavin in:

- *Oil- and Water-Soluble Vitamins Capsules*
- *Oil- and Water-Soluble Vitamins Tablets*
- *Oil- and Water-Soluble Vitamins with Minerals Capsules*
- *Oil- and Water-Soluble Vitamins with Minerals Tablets*
- *Water-Soluble Vitamins Capsules*
- *Water-Soluble Vitamins Tablets*
- *Water-Soluble Vitamins with Minerals Capsules*
- *Water-Soluble Vitamins with Minerals Tablets*

This is the procedure that involves the extraction of riboflavin from the formulation by the *Diluent*, heat, and mechanical shaking.

Unless specified in the individual monographs, the *Standard solution*, *Sample solutions*, and reagent solutions are prepared as follows.

Diluent: Acetonitrile, glacial acetic acid, and water (5:1:94)

Mobile phase: A mixture of methanol, glacial acetic acid, and water (27:1:73) containing 140 mg of sodium 1-hexanesulfonate per 100 mL

Standard solution: Transfer 20 mg of USP Riboflavin RS to a 200-mL volumetric flask, and add 180 mL of *Diluent*. Immerse the flask in a hot water bath maintained at 65°–70° for 10 min with regular shaking, or using a vortex mixer, until all of the solid materials are dissolved. Chill rapidly in a cold water bath for 10 min to room temperature, and dilute with *Diluent* to volume.

Sample solution for capsules: Weigh NLT 20 capsules in a tared weighing bottle. Open the capsules, without loss of shell material, and transfer the contents to a 100-mL beaker. Remove any contents adhering to the shells by washing with several portions of ether. Discard the washings, and dry the capsule shells with the aid of a current of dry air until the odor of ether is no longer perceptible. Weigh the empty capsule shells in the tared weighing bottle, and calculate the average net weight per capsule. Transfer a portion of the capsule contents, equivalent to 2.5 mg of riboflavin, to a 50-mL centrifuge tube. Add 25.0 mL of *Diluent*, and mix using a vortex mixer for 30 s to completely suspend the powder. Immerse the centrifuge tube in a hot water bath maintained at 65°–70°, heat for 5 min, and mix on a vortex mixer for 30 s. Return the tube to the hot water bath, heat for another 5 min, and mix on a vortex mixer for 30 s. Filter a portion of the solution, cool to room temperature, and use the clear filtrate. [NOTE—Use the filtrate within 3 h of filtration.]

Sample solution for tablets: Finely powder NLT 30 tablets. Transfer a portion of the powder, equivalent to 2.5 mg of riboflavin, to a 50-mL centrifuge tube. Add 25.0 mL of *Diluent*, and mix using a vortex mixer for 30 s to completely suspend the powder. Immerse the centrifuge tube in a hot water bath maintained at 65°–70°, heat for 5 min, and mix on a vortex mixer for 30 s. Return the tube to the hot water bath, heat for another 5 min, and mix on a vortex mixer for 30 s. Filter a portion of the solution, cool to room temperature, and use the clear filtrate. [NOTE—Use the filtrate within 3 h of filtration.]

Chromatographic system

(See *Chromatography* ⟨621⟩, *System Suitability*.)

Mode: LC

Detector: UV 280 nm
Column: 4.6-mm × 25-cm; packing L1
Flow rate: 1 mL/min
Injection volume: 10 µL

System suitability
Sample: *Standard solution*
Suitability requirements
Relative standard deviation: NMT 3.0%

Analysis
Samples: *Standard solution* and appropriate *Sample solution*
Calculate the percentage of the labeled amount of riboflavin ($C_{17}H_{20}N_4O_6$) in the portion of sample taken:

$$\text{Result} = (r_U/r_S) \times (C_S/C_U) \times 100$$

r_U	= peak response of riboflavin from the appropriate *Sample solution*
r_S	= peak response of riboflavin from the *Standard solution*
C_S	= concentration of USP Riboflavin RS in the *Standard solution* (mg/mL)
C_U	= nominal concentration of riboflavin in the appropriate *Sample solution* (mg/mL)▲USP40

Add the following:

• ▲**Chromatographic Methods, Procedure 2**

This procedure can be used to determine riboflavin in:
- *Oil- and Water-Soluble Vitamins Capsules*
- *Oil- and Water-Soluble Vitamins Tablets*
- *Oil- and Water-Soluble Vitamins with Minerals Capsules*
- *Oil- and Water-Soluble Vitamins with Minerals Tablets*
- *Water-Soluble Vitamins Capsules*
- *Water-Soluble Vitamins Tablets*
- *Water-Soluble Vitamins with Minerals Capsules*
- *Water-Soluble Vitamins with Minerals Tablets*

This is the procedure that involves the extraction of riboflavin from the formulation by the *Extraction solvent*, heat, and mechanical shaking.

Unless specified in the individual monographs, the *Standard solution*, *Sample solutions*, and reagent solutions are prepared as follows.

Extraction solvent: Transfer 1 mL of glacial acetic acid and 2.5 g of edetate disodium to a 100-mL volumetric flask. Dissolve in and dilute with water to volume. Mix the resulting solution with methanol (3:1).

Solution A: 6.8 g of sodium acetate per 1000 mL of water

Mobile phase: Prepare a mixture of *Solution A* and methanol (13:7). Add 2 mL of triethylamine per L of the mixture, and adjust with glacial acetic acid to a pH of 5.2.

Standard stock solution: Transfer 20 mg of USP Riboflavin RS to a 200-mL volumetric flask, and add 180 mL of *Extraction solvent*. Immerse the flask for 5 min in a water bath maintained at 65°–75°. Mix well, and repeat if necessary until dissolved. Chill rapidly in a cold water bath to room temperature, and dilute with *Extraction solvent* to volume.

Standard solution: Dilute 5.0 mL of the *Standard stock solution* with *Extraction solvent* to 25.0 mL.

Sample solution for capsules: Weigh NLT 20 capsules in a tared weighing bottle. Open the capsules, without loss of shell material, and transfer the contents to a beaker. Remove any contents adhering to the shells by washing with several portions of ether. Discard the washings, and dry the capsule shells with the aid of a current of dry air. Weigh the empty capsule shells in the tared weighing bottle, and calculate the net weight of the capsule contents. Transfer a portion of the capsule contents, equivalent to 2 mg of riboflavin, to a 200-mL volumetric flask. Add 100.0 mL of *Extraction solvent*, and mix for 20 min using a wrist-action shaker. Immerse the flask in a water bath maintained at 70°–75°, and heat for 20 min. Mix on a vortex mixer for 30 s, cool to room temperature, and filter. Use the clear filtrate.

Sample solution for tablets: Finely powder NLT 20 tablets. Transfer a portion of the powder, equivalent to 2 mg of riboflavin, to a 200-mL volumetric flask. Add 100.0 mL of *Extraction solvent*, and mix for 20 min using a wrist-action shaker. Immerse the flask in a water bath maintained at 70°–75°, and heat for 20 min. Mix on a vortex mixer for 30 s, cool to room temperature, and filter. Use the clear filtrate.

Chromatographic system
(See *Chromatography* ⟨621⟩, *System Suitability*.)
Mode: LC
Detector: UV 254 nm
Column: 4.6-mm × 25-cm; packing L1
Flow rate: 1 mL/min
Injection volume: 20 µL

System suitability
Sample: *Standard solution*
Suitability requirements
Relative standard deviation: NMT 3.0%
Analysis
Samples: *Standard solution* and appropriate *Sample solution*
Calculate the percentage of the labeled amount of riboflavin ($C_{17}H_{20}N_4O_6$) in the portion of sample taken:

$$\text{Result} = (r_U/r_S) \times (C_S/C_U) \times 100$$

r_U = peak response of riboflavin from the appropriate *Sample solution*
r_S = peak response of riboflavin from the *Standard solution*
C_S = concentration of USP Riboflavin RS in the *Standard solution* (mg/mL)
C_U = nominal concentration of riboflavin in the appropriate *Sample solution* (mg/mL)▲USP40

Add the following:

• **▲CHROMATOGRAPHIC METHODS, PROCEDURE 3**
This procedure can be used to determine riboflavin in:
- *Oil- and Water-Soluble Vitamins Capsules*
- *Oil- and Water-Soluble Vitamins Tablets*
- *Oil- and Water-Soluble Vitamins with Minerals Capsules*
- *Oil- and Water-Soluble Vitamins with Minerals Tablets*
- *Water-Soluble Vitamins Capsules*
- *Water-Soluble Vitamins Tablets*
- *Water-Soluble Vitamins with Minerals Capsules*
- *Water-Soluble Vitamins with Minerals Tablets*

This is the procedure that involves the extraction of riboflavin from the formulation by mixtures of organic solvents, heat, and mechanical shaking.
Unless specified in the individual monographs, the *Standard solutions*, *Sample solutions*, and reagent solutions are prepared as follows.
Diluent: 25 mg/mL of edetate disodium in water
Mobile phase: Transfer 0.4 mL of triethylamine, 15.0 mL of glacial acetic acid, and 350 mL of methanol to a 2000-mL volumetric flask. Dilute with 0.008 M sodium 1-hexanesulfonate to volume.
Standard stock solution: 0.08 mg/mL of USP Riboflavin RS in *Diluent*, with heating if necessary
Standard solution for capsules/tablets: Transfer 5.0 mL of *Standard stock solution* to a stoppered 125-mL flask. Add 10.0 mL of a mixture of methanol and glacial acetic acid (9:1) and 30.0 mL of a mixture of methanol and ethylene glycol (1:1). Insert the stopper, shake for 15 min in a water bath maintained at 60°, and cool. Filter, discarding the first few mL of the filtrate.
Standard solution for oral solution: 8 µg/mL of USP Riboflavin RS in *Diluent*, diluted from the *Standard stock solution*
Sample solution for capsules: Weigh NLT 20 capsules in a tared weighing bottle. Open the capsules, without the loss of shell material, and transfer the contents to a 100-mL beaker. Remove any contents adhering to the empty shells by washing, if necessary, with several portions of ether. Discard the washings, and dry the capsule shells with the aid of a current of dry air until the odor of ether is no longer perceptible. Weigh the empty capsule shells in the tared weighing bottle, and calculate the average net weight per capsule. Transfer a portion of the capsule contents, equivalent to 0.4 mg of riboflavin, to a stoppered 125-mL flask. Add 10.0 mL of a mixture of methanol and glacial acetic acid (9:1) and 30.0 mL of a mixture of methanol and ethylene glycol (1:1). Insert the stopper, shake for 15 min in a water bath maintained at 60°, and cool. Filter, discarding the first few mL of the filtrate.
Sample solution for oral solution: Equivalent to 8 µg/mL of riboflavin from oral solution in the *Diluent*
Sample solution for tablets: Weigh and finely powder NLT 20 tablets. Transfer a portion of the powder, equivalent to 0.4 mg of riboflavin, to a stoppered 125-mL flask. Add 10.0 mL of a mixture of methanol and glacial acetic acid (9:1) and 30.0 mL of a mixture of methanol and ethylene glycol (1:1). Insert the stopper, shake for 15 min in a water bath maintained at 60°, and cool. Filter, discarding the first few mL of the filtrate.
Chromatographic system
(See *Chromatography* 〈621〉, *System Suitability*.)
Mode: LC
Detector: UV 270 nm
Column: 4.6-mm × 25-cm; packing L7
Column temperature: 50°
Flow rate: 2 mL/min
Injection volume: 5 µL

System suitability
Sample: *Standard solution*
Suitability requirements
Relative standard deviation: NMT 2.0%
Analysis
Samples: Appropriate *Standard solution* and appropriate *Sample solution*
For capsules and tablets, calculate the percentage of the labeled amount of riboflavin ($C_{17}H_{20}N_4O_6$) in the portion of sample taken:

$$\text{Result} = (r_U/r_S) \times (C_S/C_U) \times 100$$

r_U = peak response of riboflavin from the appropriate *Sample solution*
r_S = peak response of riboflavin from the *Standard solution for capsules/tablets*
C_S = concentration of USP Riboflavin RS in the *Standard solution for capsules/tablets* (mg/mL)
C_U = nominal concentration of riboflavin in the appropriate *Sample solution* (mg/mL)

For oral solution, calculate the percentage of the labeled amount of riboflavin ($C_{17}H_{20}N_4O_6$) in the portion of sample taken:

$$\text{Result} = (r_U/r_S) \times (C_S/C_U) \times 100$$

r_U = peak response of riboflavin from the *Sample solution for oral solution*
r_S = peak response of riboflavin from the *Standard solution for oral solution*
C_S = concentration of USP Riboflavin RS in the *Standard solution for oral solution* (mg/mL)
C_U = nominal concentration of riboflavin in the *Sample solution for oral solution* (mg/mL)▲USP40

Add the following:

• ▲**CHROMATOGRAPHIC METHODS, PROCEDURE 4**

This procedure can be used to determine riboflavin in:

- *Oil- and Water-Soluble Vitamins Capsules*
- *Oil- and Water-Soluble Vitamins Tablets*
- *Oil- and Water-Soluble Vitamins with Minerals Capsules*
- *Oil- and Water-Soluble Vitamins with Minerals Tablets*
- *Water-Soluble Vitamins Capsules*
- *Water-Soluble Vitamins Tablets*
- *Water-Soluble Vitamins with Minerals Capsules*
- *Water-Soluble Vitamins with Minerals Tablets*

This is a newly added procedure as part of the USP monograph modernization efforts. The procedure uses hydrophilic interaction liquid chromatography (HILIC), and the sample preparation involves the extraction of riboflavin from the formulation by the *Diluent*, heat, and mechanical shaking.

Unless specified in the individual monographs, the *Standard solution, Sample solutions,* and reagent solutions are prepared as follows.

Diluent: Methanol, glacial acetic acid, and water (50:1:49)
Solution A: 50 mM ammonium formate; adjust with ammonium hydroxide to a pH of 9.0.
Solution B: Acetonitrile
Mobile phase: Gradient elution. See *Table 1*.

Table 1

Time (min)	Solution A (%)	Solution B (%)
0	11	89
8	17	83
15	23	77
20	30	70
21	50	50
24	50	50
25	11	89
30	11	89

Standard solution: Transfer 20 mg of USP Riboflavin RS to a 200-mL volumetric flask, and add 160 mL of *Diluent*. Immerse the flask in a hot water bath maintained at 65°–70° for 10 min with regular shaking or using a vortex mixer, until all of the solid materials are dissolved. Chill rapidly in a cold water bath for 10 min to room temperature, and dilute with *Diluent* to volume.

Sample solution for capsules: Weigh NLT 20 capsules in a tared weighing bottle. Open the capsules, without the loss of shell material, and transfer the contents to a 100-mL beaker. Remove any contents adhering to the empty shells by washing, if necessary, with several portions of ether. Discard the washings, and dry the capsule shells with the aid of a current of dry air until the odor of ether is no longer perceptible. Weigh the empty capsule shells in the tared weighing bottle, and calculate the average net weight per capsule. Transfer a portion of the capsule contents, equivalent to 2.5 mg of riboflavin, to a 50-mL centrifuge tube. Add 25.0 mL of *Diluent*, and mix using a vortex mixer for 30 s to completely suspend the powder. Immerse the centrifuge tube in a hot water bath maintained at 68°, heat for 10 min, and mix on a vortex mixer for 30 s. Return the tube to the hot water bath, heat for another 10 min, and mix on a vortex mixer for 30 s. Filter a portion of the solution, cool to room temperature, and use the clear filtrate.

Sample solution for tablets: Finely powder NLT 30 tablets. Transfer a portion of the powder, equivalent to 2.5 mg of riboflavin, to a 50-mL centrifuge tube. Add 25.0 mL of *Diluent*, and mix using a vortex mixer for 30 s to completely suspend the powder. Immerse the centrifuge tube in a hot water bath maintained at 65°–70°, heat for 10 min, and mix on a vortex mixer for 30 s. Return the tube to the hot water bath, heat for another 10 min, and mix on a vortex mixer for 30 s. Filter a portion of the solution, cool to room temperature, and use the clear filtrate. [NOTE—Use the filtrate within 3 h of filtration.]

Chromatographic system

(See *Chromatography* ⟨621⟩, *System Suitability*.)

Mode: LC

Detector: UV 267 nm

Column: 4.6-mm × 15-cm; 3.5-µm packing L68

Flow rate: 1.2 mL/min

Injection volume: 10 µL

System suitability

Sample: *Standard solution*

Suitability requirements

Relative standard deviation: NMT 2.0%

Analysis

Samples: *Standard solution* and appropriate *Sample solution*

Calculate the percentage of the labeled amount of riboflavin ($C_{17}H_{20}N_4O_6$) in the portion of sample taken:

$$\text{Result} = (r_U/r_S) \times (C_S/C_U) \times 100$$

r_U = peak response of riboflavin from the appropriate *Sample solution*

r_S = peak response of riboflavin from the *Standard solution*

C_S = concentration of USP Riboflavin RS in the *Standard solution* (mg/mL)

C_U = nominal concentration of riboflavin in the appropriate *Sample solution* (mg/mL)▲USP40

ADDITIONAL REQUIREMENTS

• **USP REFERENCE STANDARDS ⟨11⟩**

USP Riboflavin RS

⟨501⟩ SALTS OF ORGANIC NITROGENOUS BASES

STANDARD PREPARATION

Unless otherwise directed, prepare a solution in dilute sulfuric acid (1 in 70) containing, in each mL, about 500 µg of the specified USP Reference Standard, calculated on the anhydrous basis, and accurately weighed.

ASSAY PREPARATION

If the dosage form is a tablet, weigh and finely powder not less than 20 tablets, weigh accurately a portion of the powder, equivalent to about 25 mg of the active ingredient, and transfer to a 125-mL separator; or, if the dosage form is a liquid, transfer a volume of it, equivalent to about 25 mg of the active ingredient and accurately measured, to a 125-mL separator. Then to the separator add 20 mL of dilute sulfuric acid (1 in 350), and shake vigorously for 5 minutes. Add 20 mL of ether, shake carefully, and filter the acid phase into a second 125-mL separator. Shake the ether phase with two 10-mL portions of dilute sulfuric acid (1 in 350), filter each portion of acid into the second separator, and discard the ether. To the acid extract add 10 mL of sodium hydroxide TS and 50 mL of ether, shake carefully, and transfer the aqueous phase to a third 125-mL separator containing 50 mL of ether. Shake the third separator carefully, and discard the aqueous phase. Wash the two ether solutions, in succession, with a single 20-mL portion of water, and discard the water. Extract each of the two ether solutions with 20-,

20-, and 5-mL portions of dilute sulfuric acid (1 in 70), in the order listed, but each time extract first the ether solution in the third separator and then that in the second separator. Combine the acid extracts in a 50-mL volumetric flask, dilute with the acid to volume, and mix.

NOTE—Hexane or heptane may be substituted for ether if the distribution ratio of the nitrogenous base between water and hexane, or between water and heptane, favors complete extraction by the organic phase.

PROCEDURE

Unless otherwise directed, dilute 5.0 mL each of the *Standard Preparation* and the *Assay Preparation* with dilute sulfuric acid (1 in 70) to 100.0 mL, and determine the absorbance of each solution at the specified wavelength, using dilute sulfuric acid (1 in 70) as the blank. Designate the absorbance of the solution from the *Standard Preparation* as A_S and that from the *Assay Preparation* as A_U, and calculate the result of the assay as directed in the individual monograph.

⟨503⟩ ACETIC ACID IN PEPTIDES

INTRODUCTION

This chapter provides procedures to be used to determine the amount of acetic acid in peptides. Acetic acid/acetate is a common counter ion in peptide preparations.

- **METHOD 1**

Strong sodium hydroxide solution: Dissolve 42 g of sodium hydroxide in water, and dilute with water to 100 mL.

Solution A: Add 0.7 mL of phosphoric acid to 1000 mL of water, and adjust with *Strong sodium hydroxide solution* to a pH of 3.0.

Solution B: Methanol

Mobile phase: See *Table 1*.

Table 1

Time (min)	Solution A (%)	Solution B (%)
0	95	5
5	95	5
10	50	50
20	50	50
22	95	5

Diluent: Prepare a mixture of *Solution A* and *Solution B* (95:5).

Standard solution: Dissolve an accurately weighed quantity of USP Glacial Acetic Acid RS in *Diluent* to obtain a solution having a known concentration of about 0.1 mg/mL. [NOTE—The concentration can be adjusted, depending on the amount of acetate or acetic acid expected to be present in the test material.]

Sample solution: Prepare as directed in the individual monograph. The amount of material used can be adapted, depending on the amount of acetic acid expected.

Chromatographic system

(See *Chromatography* ⟨621⟩, *System Suitability.*)

Mode: LC

Detector: UV 210 nm

Column: 4.6-mm × 25-cm; 5-µm packing L1

Flow rate: 1.2 mL/min

Injection volume: 10 µL

System suitability

Sample: *Standard solution*

Suitability requirements

Relative standard deviation: NMT 5%

Retention time of acetic acid: 3–4 min

Analysis

Samples: *Standard solution* and *Sample solution*

Calculate the percentage of acetic acid in the portion of test material taken:

$$\text{Result} = (r_U/r_S) \times (C_S/C_U) \times 100$$

r_U = peak response from the *Sample solution*

r_S = peak response from the *Standard solution*

General Chapters

C_S = concentration of USP Glacial Acetic Acid RS in the *Standard solution* (mg/mL)
C_U = concentration of the *Sample solution* (mg/mL)

- **Method 2**

Solution A, Solution B, Mobile phase, Diluent, and **Chromatographic system:** See *Trifluoroacetic Acid (TFA) in Peptides* ⟨503.1⟩.

Standard solution: 0.7 mg/mL of USP Sodium Acetate Trihydrate RS in *Diluent*

Calculate the concentration of acetic acid in the *Standard solution* (C_S), in mg/mL, taken:

$$C_S = 0.441 \times C$$

0.441 = molecular weight conversion factor (60.05/136.08)
C = concentration of USP Sodium Acetate Trihydrate RS in the *Standard solution* (mg/mL)

Sample solution: About 4 mg/mL of test sample in *Diluent*. [Note—The sample concentration can be adapted, depending on the amount of acetic acid expected.]

[Note—Alternatively, *Standard solution* and *Sample solution* can be prepared as described in *Method 1*.]

System suitability

Sample: *Standard solution*

Suitability requirements

Relative standard deviation: NMT 5%

Analysis: Proceed as described in *Method 1*.

ADDITIONAL REQUIREMENTS

- **USP Reference Standards ⟨11⟩**

USP Glacial Acetic Acid RS
USP Sodium Acetate Trihydrate RS

⟨503.1⟩ TRIFLUOROACETIC ACID (TFA) IN PEPTIDES

INTRODUCTION

The following procedures are to be used to determine the amount of trifluoroacetic acid (TFA) in peptides. TFA/Trifluoroacetate is a common residual process impurity in the preparation of peptides or a counter ion in active pharmaceutical ingredients (API).

- **Procedure**

Solution A: Add 7.0 mL of phosphoric acid and 5.0 mL of ammonium hydroxide to 900 mL of water. Mix and dilute with water to 1000 mL. [Note—The pH of the solution is approximately 2.5.] Pass through a 0.45-µm filter and degas. Add 20 mL of methanol, mix, and degas for an additional 2 min.

Solution B: Acetonitrile and water (50:50). Mix and degas.

Mobile phase: See *Table 1*.

Table 1

Time (min)	Solution A (%)	Solution B (%)
0	100	0
5	100	0
6	0	100
14	0	100
15	100	0
25	100	0

Diluent: 0.5% Phosphoric acid in water (v/v)

TFA stock solution (option 1): 12 mg/mL of USP Sodium Trifluoroacetate RS in water

Calculate the concentration (C_S), in mg/mL, of TFA in the *TFA stock solution* taken:

$$C_S = 0.838 \times C$$

0.838 = molecular weight conversion factor (114.02/136.01)
C = concentration of USP Sodium Trifluoroacetate RS in the *TFA stock solution* (mg/mL)

TFA stock solution (option 2): 10 mg/mL of TFA in water prepared as follows. Add about 50 mL of water to a 100-mL volumetric flask with a stopper. Tare the stoppered flask on an analytical balance until there is no further significant drift in the reading. Transfer 670 µL of TFA to the flask, stopper immediately, and weigh. Dilute with water to volume.

System suitability solution: 0.025 mg/mL of TFA in *Diluent* prepared from the *TFA stock solution*
Standard solution (when TFA content is tested as process impurity): 0.01 mg/mL of TFA in *Diluent* prepared from the *TFA stock solution*
Standard solution (when TFA content is tested as counter ion in API): 0.25 mg/mL of TFA in *Diluent* prepared from the *TFA stock solution.* [NOTE—The concentration can be adjusted depending on the amount of TFA expected to be present in the test material.]
Sample solution: NLT 4 mg/mL of test sample in *Diluent.* [NOTE—The sample concentration can be adapted depending on the amount of TFA expected.]
Chromatographic system
(See *Chromatography* ⟨621⟩, *System Suitability.*)
Mode: LC
Detector: UV 210 nm
Column: 4.6-mm × 25-cm; 5-µm packing L1. [NOTE—A guard column of 4-mm × 2-cm; 5-µm packing L1 can be used.]
Flow rate: 1.5 mL/min
Injection volume: 20 µL
System suitability
Sample: *System suitability solution*
[NOTE—The retention time is about 3 min for TFA.]
Suitability requirements
Relative standard deviation: NMT 5%
Analysis
Samples: *Standard solution* and *Sample solution*
Calculate the percentage of TFA in the portion of sample taken:

$$\text{Result} = (r_U/r_S) \times (C_S/C_U) \times 100$$

r_U = TFA peak responses from the *Sample solution*
r_S = TFA peak responses from the *Standard solution*
C_S = concentration of TFA in the *Standard solution* (mg/mL)
C_U = concentration of the *Sample solution* (mg/mL)

ADDITIONAL REQUIREMENTS

- **USP REFERENCE STANDARDS ⟨11⟩**
USP Sodium Trifluoroacetate RS

⟨507⟩ PROTEIN DETERMINATION PROCEDURES

INTRODUCTION

Several procedures exist to determine the total protein in pharmaceutical drug substances and products. Procedures may differ based on the physical characteristic of the protein, which serves as the basis of the measurement principle (e.g., absorbance of ultraviolet light by aromatic amino acid residues or by dye binding). Understanding the protein structure and sample matrix is important when selecting a total protein quantitation procedure. Users must verify that the chosen validated method below is suitable for their specific purposes (see *Verification of Compendial Procedures* ⟨1226⟩).

PROCEDURE

Two options for Method I are presented: *Method IA,* using denaturing conditions; and *Method IB,* using native conditions. Depending on the protein structure and the nature of the protein sample (e.g., denaturing conditions may be more suitable for a strong coiled structure with most aromatic amino acids in the interior of the protein), one method may prove superior to the other, and users should select which is the most suitable method based on their protein and verify, as appropriate. At a minimum, both methods are dependent on the following conditions being met: 1) the amino acid sequence and molecular weight of the protein must be known; and 2) the protein must contain tyrosines or tryptophans, and no other chromophores (other than cystines) that absorb near 280 nm (including nucleic acids and diluent components) should be present.

- **METHOD IA. ULTRAVIOLET LIGHT ABSORBANCE UNDER DENATURING CONDITIONS**
Sample buffer A: Prepare 20 mM sodium phosphate, pH 6.5 by dissolving 0.24 g of sodium dihydrogen phosphate in about 80 mL of water. Adjust the pH with sodium hydroxide solution (10% w/w), and fill with water to 100 mL. Filter.
Sample buffer B: Prepare 7 M guanidine hydrochloride and 20 mM sodium phosphate, pH 6.5 by dissolving 0.24 g of sodium dihydrogen phosphate and 66.87 g of guanidine hydrochloride in about 50 mL of water. Adjust with sodium hydroxide solution (10% w/w), and fill with water to 100 mL. Filter.
Reference solution: Prepare 6 M guanidine hydrochloride in *Sample buffer A* by mixing 330 µL of *Sample buffer A* and 2000 µL of *Sample buffer B.*

General Chapters

Sample preparation A: Dilute the test sample by adding *Sample buffer A* and *Sample buffer B* to achieve a final concentration of 6 M guanidine hydrochloride and an absorbance of about 0.4–0.6. [NOTE—Gravimetric dilutions can be used and sometimes improve accuracy.] Prepare at least three replicates per test sample.

Analysis

Samples: *Sample buffer A, Sample buffer B, Reference solution,* and *Sample preparation A*

Determination of the protein concentration in denaturing buffer: Using a suitable spectrophotometer (see *Ultraviolet-Visible Spectroscopy* ⟨857⟩), measure the absorbance of *Sample preparation A* in 1-cm cuvettes at an optical density of 280 nm against the *Reference solution*, and subtract the absorbance value at 330 nm to obtain $A_{corrected}$.

Calculate the protein concentration (c) in the test sample:

$$c = A_{corrected} \times DF \times MW/(\varepsilon_{280\ nm} \times 1\ cm)$$

$A_{corrected}$ = absorbance at 280 nm minus the absorbance at 330 nm
DF = dilution factor
MW = calculated molecular weight of the protein
$\varepsilon_{280\ nm}$ = extinction coefficient of the test sample at 280 nm

$$\varepsilon_{280\ nm} = (n_{Trp} \times 5690 + n_{Tyr} \times 1280 + n_{Cys} \times 120)\ M^{-1} \times cm^{-1}$$

n_{Trp} = number of tryptophans
n_{Tyr} = number of tyrosines
n_{Cys} = number of cystines

System suitability

The test sample UV spectra must show a maximum between 270 and 285 nm and must show a minimum between 243 and 257 nm. The measured absorbance at 280 nm must be NLT 0.4 and NMT 0.6. The relative standard deviation (RSD) of the calculated concentration of all replicates must be NMT 3.0%.

• **METHOD IB. ULTRAVIOLET LIGHT ABSORBANCE UNDER NATIVE CONDITIONS**

Sample buffer A: Prepare 20 mM sodium phosphate, pH 6.5 by dissolving 0.24 g of sodium dihydrogen phosphate in about 80 mL of water. Adjust the pH with sodium hydroxide solution (10% w/w), and fill with water to 100 mL. Filter.

Sample preparation A: Dilute the test sample by adding *Sample buffer A* to achieve an absorbance of about 0.4–0.6. [NOTE—Gravimetric dilutions can be used and sometimes improve accuracy.] Prepare at least three replicates per test sample.

Analysis

Samples: *Sample buffer A* and *Sample preparation A*

Determination of the protein concentration in native buffer: Using a suitable spectrophotometer (see ⟨857⟩), measure the absorbance of *Sample preparation A* in 1-cm cuvettes at 280 nm against *Sample buffer A* and subtract the absorbance value at 330 nm to obtain $A_{corrected}$.

Calculate the protein concentration (c) of the test sample:

$$c = A_{corrected} \times DF \times MW/(\varepsilon_{280\ nm\text{-}native2} \times 1\ cm)$$

$A_{corrected}$ = absorbance at 280 nm minus the absorbance at 330 nm
DF = dilution factor
MW = calculated molecular weight of the protein
$\varepsilon_{280\ nm\text{-}native2}$ = extinction coefficient of the test sample at 280 nm
where the extinction coefficient $\varepsilon_{280\ nm\text{-}native2}$ is calculated as:

$$\varepsilon_{280\ nm\text{-}native2} = (n_{Trp} \times 5500 + n_{Tyr} \times 1490 + n_{Cys} \times 125)\ M^{-1} \times cm^{-1}$$

n_{Trp} = number of tryptophans
n_{Tyr} = number of tyrosines
n_{Cys} = number of cystines

System suitability

The test sample UV spectra must show a maximum between 270 and 285 nm and must show a minimum between 243 and 257 nm. The measured absorbance at 280 nm must be NLT 0.4 and NMT 0.6. The RSD of the calculated concentration of all replicates must be NMT 3.0%.

• **METHOD II. BICINCHONINIC ACID METHOD**

BCA reagent solution:[1] Prepare a solution of 10 g/L of bicinchoninic acid (BCA), 20 g/L of sodium carbonate monohydrate, 1.6 g/L of sodium tartrate, 4 g/L of sodium hydroxide, and 9.5 g/L of sodium bicarbonate in water to a pH of 11.25.

Copper sulfate reagent solution: Prepare a solution of 40 g/L of cupric sulfate pentahydrate in water.

BCA working reagent solution: Mix 50 volumes of *BCA reagent solution* with 1 volume of *Copper sulfate reagent solution.* Mix until the green solution is clear.

[1] Suitable BCA reagents are available from Thermo Scientific catalog #23225 or equivalent.

Sample dilution buffer: Water or another suitable, non-interfering buffer

Standard solutions: Ideally, use the USP Reference Standard for the protein under test. If the protein of interest is unknown, is a mixture, or is a specific USP Reference Standard that is unavailable, use USP BSA for Protein Quantitation RS. Dilute portions of this solution with the *Sample dilution buffer* to obtain NLT five evenly spaced *Standard solutions* in triplicate. The selected *Standard solution* concentrations should result in a linear curve, typically in the range of 25–1000 µg/mL of protein.

Suitability standard solution: Prepare an independent dilution of the same protein used to make the *Standard solutions* above using *Sample dilution buffer* to obtain a *Suitability standard solution* with a concentration near the midpoint of the standard curve. Prepare the *Suitability standard solution* in triplicate.

Sample solution: Prepare a *Sample solution* with an expected concentration within the standard curve by diluting with the *Sample dilution buffer*. Prepare triplicate samples.

Analysis

Samples: *Sample dilution buffer, Standard solutions, Suitability standard solution,* and *Sample solution*

Accurately transfer 100 µL of *Sample dilution buffer, Standard solutions, Suitability standard solution,* and *Sample solution* to individual test tubes. [NOTE—96-well, plate-based, and automated methods can also be used with suitable volume adjustments to the procedure below.] Add 2.0 mL of *BCA working reagent solution* to each tube, and mix well.

Cover and incubate the solutions at 37 ± 2° for 30 ± 1 min, then allow the samples to cool to room temperature for NLT 5 min and NMT 60 min. Determine the absorbances of the solutions at 562 nm with a suitable spectrophotometer (see ⟨857⟩). Autozero the instrument with the *Sample dilution buffer* sample.

Measure the absorbance of all *Sample dilution buffer, Standard solutions, Suitability standard solution,* and *Sample solution* samples within 10 min.

Calculations: Plot the absorbances of the *Standard solutions* versus the protein concentrations of the *Standard solutions*, and prepare a standard curve using the linear regression method. Use this standard curve and the absorbance of the *Sample solution* to determine the concentration of protein in each *Suitability standard solution* and *Sample solution*.

System suitability

Samples: *Standard solutions* and *Suitability standard solution*

Suitability requirements

Linearity: The coefficient of determination (r^2) for a linear fit of all *Standard solutions* is NLT 0.99.

Relative standard deviation: NMT 5% for triplicate results of the *Suitability standard solution*

Accuracy: The calculated concentration of the *Suitability standard solution* must be within 90%–110% of the theoretical concentration.

Acceptance criteria

Relative standard deviation: NMT 5% for triplicate *Sample solution* results

• **METHOD III. BRADFORD METHOD**

Sample dilution buffer: Water or another suitable, non-interfering buffer

Standard solutions: Use the USP Reference Standard for the protein under test or USP BSA for Protein Quantitation RS if the protein of interest is unknown, is a mixture, or is a specific USP Reference Standard that is unavailable. Dilute portions of this solution with the *Sample dilution buffer* to obtain NLT five evenly spaced *Standard solutions* in triplicate. Two standard curve ranges are provided for use: either 0.1–1.0 mg/mL of protein (see *Analysis* procedure *A*, below) or 5–25 µg/mL of protein (see *Analysis* procedure *B*, below).

Suitability standard solution: Dilute the USP Reference Standard for the protein under test or USP BSA for Protein Quantitation RS with *Sample dilution buffer* to obtain a *Suitability standard solution* having a concentration near the midpoint of the standard curve. Prepare the *Suitability standard solution* in triplicate.

Sample solution: Prepare a *Sample solution* with an expected concentration within one of the two concentration ranges in options *A* or *B* below by diluting with the *Sample dilution buffer*. Prepare triplicate samples.

Coomassie reagent solution: Dissolve 100 mg of brilliant blue G[2] in 50 mL of alcohol. Add 100 mL of phosphoric acid, dilute with water to 1 L, and mix. Pass the solution through filter paper (Whatman No. 1 or equivalent), and store the filtered reagent in an amber bottle at room temperature. [NOTE—Slow precipitation of the dye will occur during storage of the reagent. Filter the reagent before use.]

Analysis: Select one of the two concentration ranges listed below that is suitable for the expected concentrations of the *Sample solutions*.

A. Protein concentration range: 0.1–1.0 mg/mL

Samples: *Sample dilution buffer, Standard solutions,* and *Sample solution*

Add 1 mL of the *Coomassie reagent solution* to 20 µL of each *Sample dilution buffer, Standard solution,* and *Sample solution* sample. Mix by inversion, avoiding foaming. Incubate 10–30 min. By using a suitable spectrophotometer (see ⟨857⟩) [NOTE—Do not use quartz (silica) cuvettes.], use the *Sample dilution buffer* to set the instrument to zero at 595 nm. Autozero the instrument with the *Sample dilution buffer* sample.

Measure the absorbance of all *Sample dilution buffer, Standard solutions, Suitability standard solution,* and *Sample solution* samples within 60 min.

[2] Suitable brilliant blue G dye is available from Sigma–Aldrich, catalog #B0770.

General Chapters

B. Protein concentration range: 5–25 µg/mL

Samples: *Sample dilution buffer, Standard solutions,* and *Sample solution*

Add 0.5 mL of the *Coomassie reagent solution* to 0.5 mL each of *Sample dilution buffer, Standard solution,* and *Sample solution* sample. Mix by inversion, avoiding foaming. Incubate 10–30 min. By using a suitable spectrophotometer (see ⟨857⟩) [NOTE—Do not use quart (silica) cuvettes.], use the *Sample dilution buffer* to set the instrument to zero at 595 nm. Autozero the instrument with the *Sample dilution buffer* sample. Measure the absorbance of all *Sample dilution buffer, Standard solutions, Suitability standard solution,* and *Sample solution* samples within 60 min.

Calculations: [NOTE—The relationship of absorbance to protein concentration is nonlinear; however, if the standard curve concentration range is sufficiently small, it will approach linearity.] Plot the absorbances of the *Standard solutions* versus the protein concentrations, and determine the standard curve best fitting the plotted points. From this standard curve and the absorbance of the *Sample solution,* determine the concentration of protein in the *Sample solution.*

System suitability

Samples: *Standard solutions* and *Suitability standard solutions*

Suitability requirements

Linearity: r^2 for a fit of all *Standard solutions* is NLT 0.99.

Relative standard deviation: NMT 15% for triplicate results of the *Suitability standard solution*

Recovery: The calculated concentration of the *Suitability standard solution* must be within 90%–110% of the theoretical concentration.

Acceptance criteria: %CV of triplicates of the *Sample solution* is NMT 15%.

• **METHOD IV. LOWRY METHOD**

SDS solution: If required, prepare a solution of 50 g/L of sodium dodecyl sulfate (SDS).

Lowry reagent A: Prepare a solution of 10 g/L of sodium hydroxide in water, and prepare a solution of 50 g/L of sodium carbonate anhydrous in water. Mix equal volumes (2 volumes and 2 volumes) of each solution, and dilute with water or *SDS solution,* if required, to 5 volumes. [NOTE—SDS may be added to *Lowry reagent A* when the test protein contains detergents or lipids or is poorly soluble after treatment for interfering substances.]

Lowry reagent B: Prepare a fresh solution of 29.8 g/L of disodium tartrate dihydrate in water. Prepare a solution of 12.5 g/L of cupric sulfate pentahydrate in water. Mix equal volumes (2 volumes and 2 volumes) of each solution, and dilute with water to 5 volumes.

Lowry reagent C: Mix 50 volumes of *Lowry reagent A* with 1 volume of *Lowry reagent B.* [NOTE—Prepare fresh and protect from light.]

Sample dilution buffer: Purified water or other non-interfering buffer

Standard solutions: Use the USP Reference Standard for the protein under test or USP BSA for Protein Quantitation RS if the protein of interest is unknown, is a mixture, or is a specific USP Reference Standard that is unavailable. Dilute portions of this solution with the *Sample dilution buffer* to obtain NLT five evenly spaced *Standard solutions.* The standard concentrations should be selected to result in a linear curve, typically in the range of 10–200 µg/mL of protein.

Suitability standard solution: Dilute the USP Reference Standard for the protein under test or USP BSA for Protein Quantitation RS with *Sample dilution buffer* to obtain a *Suitability standard solution* having a concentration near the midpoint of the standard curve. Prepare and analyze the *Suitability standard solution* in triplicate.

Sample solution: Prepare a *Sample solution* with an expected concentration within the standard curve by diluting with the *Sample dilution buffer.* Prepare and analyze samples in triplicate.

Diluted Folin–Ciocalteu's phenol reagent: Dilute Folin–Ciocalteu's phenol reagent with water (1:1). Alternative dilutions may be used provided that the pH of the samples (i.e., *Standard solutions* and *Sample solutions* after addition of *Lowry reagent C* and the *Diluted Folin–Ciocalteu's phenol reagent*) is 10.0–10.6.

Analysis

Samples: *Sample dilution buffer, Standard solutions, Suitability standard solution,* and *Sample solution*

Accurately transfer 1.0 mL of *Sample dilution buffer, Standard solutions, Suitability standard solution,* and *Sample solution* samples to individual test tubes. To each test tube add 5.0 mL of *Lowry reagent C.* Allow to stand at room temperature for 10 min. Add 0.5 mL of *Diluted Folin–Ciocalteu's phenol reagent* to each test tube, mix immediately, and incubate at room temperature for 30 min. Determine the absorbance of each solution at 750 nm with a suitable spectrophotometer (see ⟨857⟩). Autozero the instrument with the *Sample dilution buffer.*

Calculations: Plot the absorbances of the *Standard solutions* versus the protein concentrations of the *Standard solutions,* and prepare a standard curve using the linear regression method. Use this standard curve and the absorbances of the *Sample solutions* to determine the concentration of protein in each of the *Sample solution* samples and *Suitability standard solution.*

System suitability

Sample: *Suitability standard solution*

Suitability requirements

Linearity: r^2 for a linear fit of all standards is NLT 0.995.

Relative standard deviation: NMT 5% for triplicate results of the *Suitability standard solution*

Recovery: The calculated concentration of the *Suitability standard solution* must be within 90%–110% of the theoretical concentration.

Acceptance criteria

Relative standard deviation: NMT 5% for triplicate sample results

- **METHOD V. AMINO ACID ANALYSIS**

Separation and determination of hydrolyzed amino acids by ion-exchange chromatography, followed by postcolumn ninhydrin derivatization, is described for protein samples containing a protein of known molecular weight and amino acid composition. [NOTE—For additional information, see *Biotechnology-Derived Articles—Amino Acid Analysis* ⟨1052⟩, which may be a helpful but not mandatory resource.]

Hydrolysis solution: 6 N hydrochloric acid

Sample hydrolysate preparations: Prepare a protein sample such that the content of amino acids is within the established linear working range of the procedure. [NOTE—Glassware used for hydrolysis must be clean.] Place suitable volumes of the sample and *Hydrolysis solution* in a hydrolysis tube. [NOTE—Common volumes range from 100 to 500 µL for the sample and from 1 to 2 mL for the *Hydrolysis solution* such that complete protein digestion is demonstrated within the hydrolysis incubation time.] Cool the mixture until solidification, and evacuate until the pressure is <0.2 bar. Flame-seal the hydrolysis tube in vacuum by melting the neck of the tube. [NOTE—Alternative commercially available hydrolysis vials also can be used.] Hydrolyze at 110° for 22 h. Allow the tube to cool, and remove the solvent by centrifugal vacuum concentrator.

Chromatography

Solution A: Sodium citrate buffer (0.2 N in sodium), containing 2.0% trisodium citrate dihydrate, 0.1% phenol, 0.2% thiodiglycol, and 2.0% propan-2-ol. Adjust with concentrated hydrochloric acid to a pH of 3.2.

Solution B: Sodium citrate buffer (0.2 N in sodium), containing 2.0% trisodium citrate dihydrate and 0.1% phenol. Adjust with concentrated hydrochloric acid to a pH of 4.25.

Solution C: Sodium citrate buffer (1.2 N in sodium), containing 2.0% trisodium citrate dihydrate, 0.1% phenol, and 5.8% sodium chloride. Adjust with concentrated hydrochloric acid to a pH of 6.45.

Solution D: 0.4 M sodium hydroxide containing 0.1% ethylenediaminetetraacetic acid

Mobile phase: See *Table 1*. Equilibrate the system before each run.

Table 1

Time (min)	Solution (100%)	Column Temperature	Flow, Mobile Phase (mL/h)	Flow, Postcolumn Reagent (mL/h)
0	A	49°	35	25
8.5	A	49°	35	25
8.51	B	51°	35	25
23.0	B	51°	35	25
23.01	C	51°	35	25
24.0	C	51°	35	25
24.01	C	95°	35	25
41.5	C	95°	35	25
41.51	D	95°	35	25
45.5	D	95°	35	25
45.51	A	49°	35	25
49.0	A	49°	35	25
49.01	50% Isopropanol	49°	0	0
51.0	50% Isopropanol	49°	0	0
51.01	A	49°	44	0
62.0	A	49°	44	0
62.01	A	49°	35	25
64.0	A	49°	35	25

Loading buffer: Sodium citrate buffer (0.2 N in sodium), containing 2.0% trisodium citrate dihydrate, 0.1% phenol, and 2.0% thiodiglycol. Adjust with concentrated hydrochloric acid to a pH of 2.2.

Postcolumn reagent

Solution 1: Solution containing 7.6% acetic acid, 47.7% ethylene glycol, 28.7% water, and 16.0% potassium acetate

Solution 2: Solution containing 9% methanol, 8% ninhydrin, 46.4% diethylene glycolmethyl ether, 36% ethylene glycol, and 0.6% hydrindantin. Prepare *Postcolumn reagent* by mixing 1.75 L of *Solution 1* and 0.25 L of *Solution 2*. Use nitrogen sparging during preparation and mixing. Keep the solution under nitrogen pressure.

Standard solution: Prepare a solution having known equimolar amounts of L-alanine, L-arginine, L-aspartic acid, L-glutamic acid, glycine, L-histidine, L-isoleucine, L-leucine, L-lysine, L-methionine, L-phenylalanine, L-proline, L-serine, L-threonine, L-tyrosine, and L-valine with half the equimolar amount of L-cystine. [NOTE—Suitable concentrations are 250 and 125 nmol/mL, respectively.]

General Chapters

Sample solution: Reconstitute the *Sample hydrolysate preparations* in a suitable volume of *Loading buffer.*
Blank: *Hydrolysis solution* that has been taken through analytical steps including hydrolysis
Chromatographic system
(See *Chromatography* ⟨621⟩, *System Suitability.*)
Mode: LC
Detector: 440 and 570 nm
Columns
Prewash: 4.6-mm × 10-cm; 20-µm sodium form, packing L58
Analytical: 4.6-mm × 20-cm; 8-µm sodium form, packing L58
Injection volume: 40 µL, at 1 min with baseline reset
Postcolumn reaction: As the amino acids are eluted from the column, *Postcolumn reagent* is added at a rate of 25 mL/h. After mixing, the column effluent and the *Postcolumn reagent* are passed through a reaction coil of approximately 10-m × 0.3-mm PTFE tubing at a temperature of approximately 135°, where a purple color is developed.
Reaction coil temperature: 135°
System suitability
Sample: *Standard solution*
Suitability requirements: All 17 amino acid peaks must be visible in the *Standard solution.*
Resolution: NLT 1.2 between the pairs of L-threonine and L-serine, L-cystine and L-valine, and L-isoleucine and L-leucine
Tailing factor: 0.8–1.5 for the peak of L-aspartic acid
Relative standard deviation: NMT 2.0% determined from the L-aspartic acid peak
Analysis
Samples: *Blank, Standard solution,* and *Sample solution*
Record and measure the responses for each amino acid peak in the *Standard solution* and *Sample solution.* Use the responses obtained from the *Standard solution* to calculate the content of each amino acid in the sample. Analyze the *Blank* to confirm purity of the reagent and diluent.
Calculations: Use well-recovered amino acids to quantify the protein. [NOTE—For additional information, see *Biotechnology-Derived Articles—Amino Acid Analysis* ⟨1052⟩, *Protein Hydrolysis,* which may be a helpful but not mandatory resource.] Divide the quantity, in nmol, of each of the well-recovered amino acids by the expected number of residues for that amino acid to obtain the protein content based on each well-recovered amino acid. Average the protein content results calculated. Discard protein content values that deviate >5% from the mean. Recalculate the mean protein content from the remaining values to obtain the protein content of the sample.

- **USP REFERENCE STANDARDS ⟨11⟩**
USP BSA for Protein Quantitation RS

⟨511⟩ SINGLE-STEROID ASSAY

In the following procedure, the steroid to be assayed is separated from related foreign steroids and excipients by thin-layer chromatography and determined following recovery from the chromatogram.

PREPARATION OF THE PLATE

Prepare a slurry from 30 g of chromatographic silica gel with a suitable fluorescing substance by the gradual addition, with mixing, of about 65 mL of a mixture of water and alcohol (5:2). Transfer the slurry to a clean, 20- × 20-cm plate, spread to make a uniform layer 250 µm thick, and allow to dry at room temperature for 15 minutes. Heat the plate at 105° for 1 hour, and store in a desiccator.

SOLVENT A

Mix methylene chloride with methanol (180:16).

SOLVENT B

Mix chloroform with acetone (4:1).

STANDARD PREPARATION

Dissolve in a mixture of equal volumes of chloroform and alcohol a suitable quantity of the USP Reference Standard specified in the individual monograph, previously dried as directed (see *USP Reference Standards* ⟨11⟩) and accurately weighed, to obtain a solution having a known concentration of about 2 mg per mL.

ASSAY PREPARATION

Prepare as directed in the individual monograph.

PROCEDURE

Divide the area of the chromatographic plate into three equal sections, the left and right sections to be used for the *Assay Preparation* and the *Standard Preparation*, respectively, and the center section for the blank. Apply 200 µL each of the *Assay Preparation* and the *Standard Preparation* as streaks 2.5 cm from the bottom of the appropriate section of the plate. Dry the solution as it is being applied, with the aid of a stream of air. Using the *Solvent* specified in the individual monograph, develop the chromatogram in a suitable chamber, previously equilibrated and lined with absorbent paper, until the solvent front has moved 15 cm above the initial streaks.

Remove the plate, evaporate the solvent, and locate the principal band occupied by the *Standard Preparation* by viewing under UV light. Mark this band, as well as corresponding bands in the *Assay Preparation* and blank sections of the plate. Remove the silica gel from each band separately, either by scraping onto glazed weighing papers or by using a suitable vacuum collecting device, and transfer it to a glass-stoppered, 50-mL centrifuge tube. To each tube add 25.0 mL of alcohol, and shake for not less than 2 minutes. Centrifuge the tubes for 5 minutes, pipet 20 mL of the supernatant from each tube into a glass-stoppered, 50-mL conical flask, add 2.0 mL of a solution prepared by dissolving 50 mg of blue tetrazolium in 10 mL of methanol, and mix. Proceed as directed for *Procedure* under *Assay for Steroids* ⟨351⟩, beginning with "Then to each flask."

⟨525⟩ SULFUR DIOXIDE

The following methods are provided for the determination of sulfur dioxide in pharmaceutical excipients.

METHOD I

Procedure

Mix 20 g of the test specimen, accurately weighed, with 200 mL of an appropriate solvent as indicated in each individual monograph, and stir until a smooth suspension is obtained. Allow the test specimen mixture to remain undisturbed until most of the test specimen has settled, and filter the aqueous portion through paper (Whatman No. 1 or equivalent). To 100 mL of the clear filtrate add an additional solvent as indicated in each individual monograph, add 3 mL of starch TS, and titrate with 0.01 N iodine solution VS to the first permanent blue or purple color. Each 1.0 mL of 0.01 N iodine solution VS consumed corresponds to 0.003% of sulfur dioxide found.

METHOD II

Procedure

Transfer about 50 to 100 g of the substance to be tested, accurately weighed, to a 250-mL conical flask, add 100 to 150 mL of water, and mix. Cool to between 5° and 10°. While stirring with a magnetic stirrer, add 10 mL of cold 1.5 N sodium hydroxide (at a temperature between 5° and 10°). Stir for an additional 20 seconds, and add 10 mL of starch indicator solution, prepared as follows: mix 10 g of soluble starch with 50 mL of cold water, transfer to 1000 mL of boiling water, stir until completely dissolved, cool, and add 1 g of salicylic acid preservative. [NOTE—Discard the solution after 1 month.] Add 10 mL of 2.0 N sulfuric acid (at a temperature between 5° and 10°), and titrate immediately with 0.005 N iodine VS until a light blue color persists for 1 minute (see *Titrimetry* ⟨541⟩). Perform a blank determination, using 200 mL of water treated similarly to the solution under test, and make any necessary correction. Each mL of 0.005 N iodine is equivalent to 0.16 mg of SO_2.

METHOD III

Procedure

Dissolve 20.0 g of the test specimen in 150 mL of hot water in a flask having a round bottom and a long neck, add 5 mL of phosphoric acid and 1 g of sodium bicarbonate, and at once connect the flask to a condenser. [NOTE—Excessive foaming can be alleviated by the addition of a few drops of a suitable antifoaming agent.] Distill 50 mL, receiving the distillate under the surface of 50 mL of 0.1 N iodine. Acidify the distillate with a few drops of hydrochloric acid, add 2 mL of barium chloride TS, and heat on a steam bath until the liquid is nearly colorless. The precipitate of barium sulfate, if any, when filtered, washed, and ignited, weighs not more than 3 mg, corresponding to not more than 0.004% of sulfur dioxide, correction being made for any sulfate that may be present in 50 mL of the 0.1 N iodine.

METHOD IV

In this test, sulfur dioxide is released from the test specimen in a boiling acid medium and is removed by a stream of carbon dioxide. The separated gas is collected in a dilute hydrogen peroxide solution, in which the sulfur dioxide is oxidized to sulfuric acid and titrated with standard alkali, using a pH meter to control the pH value and titration. This test is performed under conditions such that the requirements specified in the system suitability test are met.

Special Reagents

CARBON DIOXIDE

Use carbon dioxide with a flow regulator that will maintain a flow of 100 ± 10 mL per minute.

HYDROGEN PEROXIDE SOLUTION

Dilute 30% hydrogen peroxide with water to obtain a 3% solution. Neutralize the 3% hydrogen peroxide solution with 0.01 N sodium hydroxide to a pH of 4.1 determined potentiometrically.

POTASSIUM METABISULFITE SOLUTION

Transfer 0.87 g of potassium metabisulfite ($K_2S_2O_5$) and 0.2 g of edetate disodium to a 1000-mL volumetric flask. Dilute with water to volume before mixing. [NOTE—Edetate disodium is used to protect sulfite ion from oxidation.]

Apparatus

A suitable apparatus for sulfur dioxide determination is shown in the accompanying diagram (*Figure 1*).

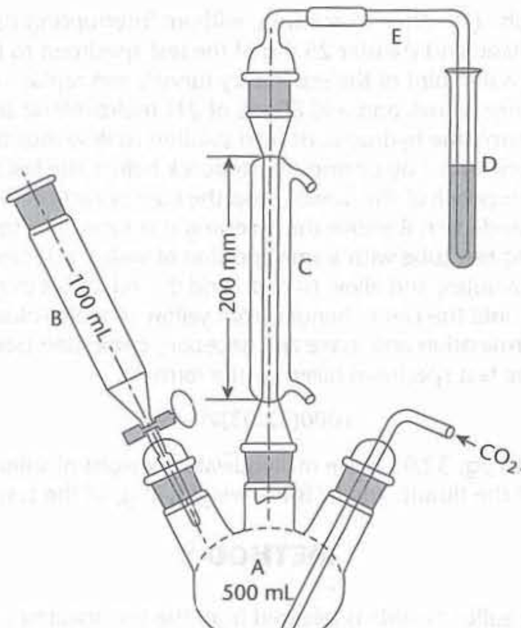

Figure 1. Apparatus for Method IV.

The apparatus consists of a 500-mL three-neck, round-bottom boiling flask, *A;* a separatory funnel, *B,* having a capacity of 100 mL or greater; a gas inlet tube of sufficient length to permit introduction of the carbon dioxide within 2.5 cm of the bottom of the boiling flask; a reflux condenser, *C,* having a jacket length of 200 mm; and a delivery tube, *E,* connecting the upper end of the reflux condenser to the bottom of a receiving test tube, *D.* Apply a thin film of stopcock grease to the sealing surfaces of all joints except the joint between the separatory funnel and the boiling flask, and clamp the joints to ensure tightness.

System Suitability Test

TEST A

Using the *Potassium Metabisulfite Solution* as the standard, proceed as directed for *Procedure,* except replace the 25.0 g of test substance with 20 mL of *Potassium Metabisulfite Solution.* Calculate the content, in µg per mL, of sulfur dioxide in the *Potassium Metabisulfite Solution* taken by the formula:

$$1000(32.03)VN/V_P$$

in which the factor 1000 converts mg to µg; 32.03 is the milliequivalent weight of sulfur dioxide; V is the volume, in mL, of titrant consumed; N is the normality of the titrant; and V_P is the volume, in mL, of the *Potassium Metabisulfite Solution* taken for the test.

TEST B

In a 100-mL conical flask, add 20 mL of 0.02 N iodine solution and 5 mL of 2 N hydrochloric acid. Add 1 mL of starch TS, and titrate with the *Potassium Metabisulfite Solution* until the first discoloration is observed. Calculate the content, in µg per mL, of sulfur dioxide in the *Potassium Metabisulfite Solution* by the formula:

$$1000(32.03)V_IN_I/V_P$$

in which 1000 and 32.03 are defined above; V_I is the volume, in mL, of the iodine solution used in the test; N_I is the normality of the iodine solution; and V_P is the volume, in mL, of the *Potassium Metabisulfite Solution* consumed.

The difference between the sulfur dioxide contents obtained from *Test A* and *Test B* is not more than 5% of their mean value. *Test B* shall be performed within 15 minutes after completion of *Test A.* [NOTE—This avoids a potential variation of the sulfur dioxide content in the *Potassium Metabisulfite Solution* when stored at room temperature.]

Procedure

Add 150 mL of water to the boiling flask (*A*). Close the stopcock of the separatory funnel, and begin the flow of carbon dioxide at a rate of 100 ± 5 mL per minute through the apparatus. Start the condenser coolant flow. Place 10 mL of *Hydrogen*

Peroxide Solution in the receiving test tube (*D*). After 15 minutes, without interrupting the flow of carbon dioxide, remove the separatory funnel (*B*) from the boiling flask, and transfer 25.0 g of the test specimen to the boiling flask with the aid of 100 mL of water. Apply stopcock grease to the outer joint of the separatory funnel, and replace the separatory funnel in the boiling flask. Close the stopcock of the separatory funnel, and add 80 mL of 2 N hydrochloric acid to the separatory funnel. Open the stopcock of the separatory funnel to permit the hydrochloric acid solution to flow into the boiling flask, guarding against escape of sulfur dioxide into the separatory funnel by closing the stopcock before the last few mL of hydrochloric acid drain out. Boil the mixture for 1 hour. Open the stopcock of the funnel, stop the flow of carbon dioxide, discontinue heating the flask, and turn off the cooling water in the condenser. Remove the receiving test tube, and transfer its contents to a 200-mL wide-necked, conical flask. Rinse the receiving test tube with a small portion of water, add the rinsing to the 200-mL conical flask, and mix. Heat on a water bath for 15 minutes, and allow to cool. Add 0.1 mL of bromophenol blue TS, and titrate the contents with 0.1 N sodium hydroxide VS until the color changes from yellow to violet-blue, with the color change lasting for at least 20 seconds. Perform a blank determination and make any necessary correction (see *Titrimetry* 〈541〉). Calculate the content, in µg per g, of sulfur dioxide in the test specimen taken by the formula:

$$1000(32.03)VN/W$$

in which the factor 1000 converts mg to µg; 32.03 is the milliequivalent weight of sulfur dioxide; V is the volume, in mL, of titrant consumed; N is the normality of the titrant; and W is the weight, in g, of the test specimen taken.

METHOD V

In this method, similar to *Method IV*, sulfur dioxide is released from the test specimen in a boiling acid medium and is removed by a stream of nitrogen. The separated gas is collected in a dilute hydrogen peroxide solution, in which the sulfur dioxide is oxidized to sulfuric acid and titrated with standard alkali, using methyl red as an indicator. This test is performed under conditions such that the requirements specified in the system suitability test are met.

Special Reagents

HYDROGEN PEROXIDE SOLUTION

Dilute a portion of 30 percent hydrogen peroxide with water to obtain a 3% solution. Just before use, add 3 drops of methyl red TS, and neutralize to a yellow endpoint with 0.01 N sodium hydroxide. Do not exceed the endpoint.

NITROGEN

Use high-purity nitrogen with a flow regulator that will maintain a flow of 200 ± 10 mL per minute. Guard against the presence of oxygen by passing the nitrogen through a scrubber, such as alkaline pyrogallol, prepared as follows: add 4.5 g of pyrogallol to a gas-washing bottle, purge the bottle with nitrogen for 3 minutes, and add a solution containing 85 mL of water and 65 g of potassium hydroxide while maintaining an atmosphere of nitrogen in the bottle.

POTASSIUM METABISULFITE SOLUTION

Transfer 0.87 g of potassium metabisulfite ($K_2S_2O_5$) and 0.2 g of edetate disodium to a 1000-mL volumetric flask. Dilute with water to volume before mixing. [NOTE—Edetate disodium is used to protect sulfite ion from oxidation.]

Apparatus

The apparatus (see *Figure 2*) is designed to effect the selective transfer of sulfur dioxide from the specimen in boiling aqueous hydrochloric acid to the *Hydrogen Peroxide Solution* in vessel *G*. The backpressure is limited to the unavoidable pressure due to the height of the *Hydrogen Peroxide Solution* above the tip of the bubbler, *F*. Keeping the backpressure as low as possible reduces the likelihood that sulfur dioxide will be lost through leaks. Preboil vinyl and silicone tubing. Apply a thin film of stopcock grease to the sealing surfaces of all joints, except the joint between the separatory funnel and the flask, and clamp the joints to ensure tightness. The separatory funnel, *B*, has a capacity of 100 mL or greater. The inlet adapter, *A*, with a hose connector, provides a means of applying headpressure over the solution. [NOTE—A pressure-equalizing dropping funnel is not recommended because condensate, which may contain sulfur dioxide, is deposited in the funnel and the side arm.]

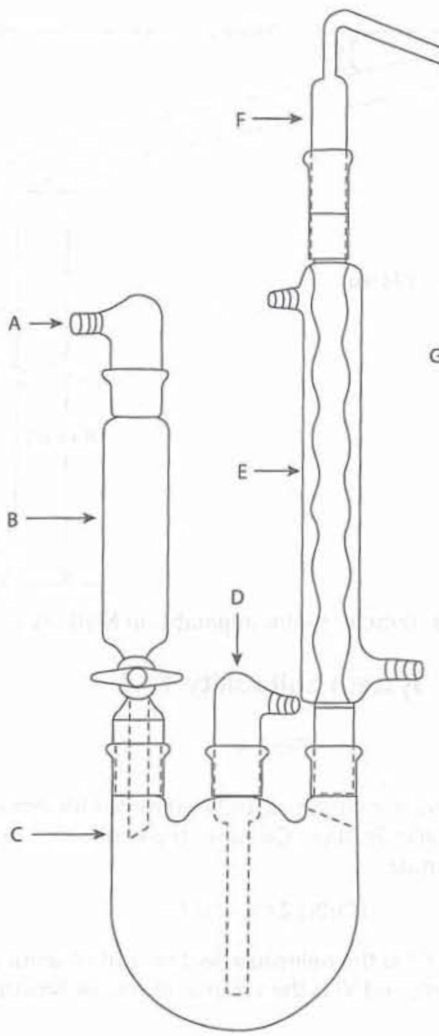

Figure 2. Apparatus for Method V.

The round-bottom flask, *C,* is a 1000-mL flask with three 24/40 tapered joints. The gas inlet tube, *D,* is long enough to permit introduction of the nitrogen to within 2.5 cm of the bottom of the flask. The Allihn condenser, *E,* has a jacket length of 300 mm. The bubbler, *F* (see *Figure 3*), is fabricated from glass according to the dimensions given in *Figure 3*. The *Hydrogen Peroxide Solution* is contained in the vessel, *G,* having an inside diameter of about 2.5 cm and a depth of about 18 cm. Circulate coolant, such as a mixture of water and methanol (4:1) maintained at 5°, to chill the condenser.

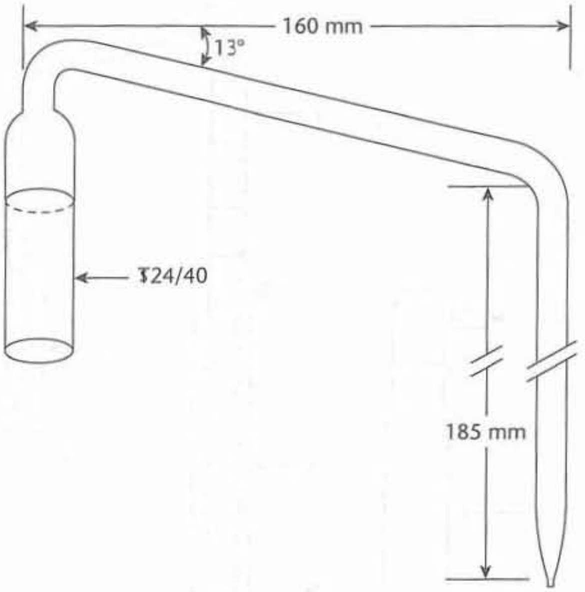

Figure 3. Bubbler (F) for apparatus in Method V.

System Suitability Test

TEST A

Using the *Potassium Metabisulfite Solution* as the standard, proceed as directed for *Procedure*, except replace the 50.0 g of test substance with 20 mL of *Potassium Metabisulfite Solution*. Calculate the content, in µg per mL, of sulfur dioxide in the *Potassium Metabisulfite Solution* taken by the formula:

$$1000(32.03)VN/V_P$$

in which the factor 1000 converts mg to µg; 32.03 is the milliequivalent weight of sulfur dioxide; V is the volume, in mL, of titrant consumed; N is the normality of the titrant; and V_P is the volume, in mL, of *Potassium Metabisulfite Solution* taken for the test.

TEST B

In a 100-mL conical flask, add 20 mL of 0.02 N iodine solution and 5 mL of 2 N hydrochloric acid. Add 1 mL of starch TS, and titrate with the *Potassium Metabisulfite Solution* until the first discoloration is observed. Calculate the content, in µg per mL, of sulfur dioxide in the *Potassium Metabisulfite Solution* by the formula:

$$1000(32.03)V_IN_I/V_P$$

in which 1000 and 32.03 are defined above; V_I is the volume, in mL, of iodine solution used in the test; N_I is the normality of the iodine solution; and V_P is the volume, in mL, of *Potassium Metabisulfite Solution* consumed.

The difference between the sulfur dioxide contents obtained from *Test A* and *Test B* is not more than 5% of their mean value. *Test B* shall be performed within 15 minutes after completion of *Test A*. [NOTE—This avoids a potential variation of the sulfur dioxide content in the *Potassium Metabisulfite Solution* when stored at room temperature.]

Procedure

Position the apparatus in a heating mantle controlled by a power-regulating device. Add 400 mL of water to the flask. Close the stopcock of the separatory funnel, and add 90 mL of 4 N hydrochloric acid to the separatory funnel. Begin the flow of nitrogen at a rate of 200 ± 10 mL per minute. Start the condenser coolant flow. Add 30 mL of *Hydrogen Peroxide Solution* to the vessel *(G)*. After 15 minutes, remove the separatory funnel, and transfer a mixture of 50.0 g of the test specimen, accurately weighed, and 100 mL of alcohol solution (5 in 100) to the flask. Apply stopcock grease to the outer joint of the separatory funnel, return the separatory funnel to the tapered joint flask, and concomitantly resume the nitrogen flow. Apply headpressure above the hydrochloric acid solution in the separatory funnel with a rubber bulb equipped with a valve. Open the stopcock of the separatory funnel to permit the hydrochloric acid solution to flow into the flask. Continue to maintain sufficient pressure above the hydrochloric acid solution to force it into the flask. [NOTE—The stopcock may be temporarily closed, if necessary, to increase the pressure.] To guard against escape of sulfur dioxide into the separatory funnel, close the stopcock be-

fore the last few mL of hydrochloric acid drain out. Apply power to the heating mantle sufficient to cause about 85 drops of reflux per minute. After refluxing for 1.75 hours, remove the vessel *(G),* add 3 drops of methyl red TS, and titrate the contents with 0.01 N sodium hydroxide VS, using a 10-mL buret with an overflow tube and a hose connection to a carbon dioxide-absorbing tube, to a yellow endpoint that persists for at least 20 seconds. Perform a blank determination, and make any necessary correction (see *Titrimetry* ⟨541⟩). Calculate the quantity, in µg, of SO_2 in each g of the test specimen taken by the formula:

$$1000(32.03)VN/W$$

in which the factor 1000 converts mg to µg; 32.03 is the milliequivalent weight of sulfur dioxide; V is the volume, in mL, of titrant consumed; N is the normality of the titrant; and W is the weight, in g, of the test specimen taken.

⟨531⟩ THIAMINE ASSAY

ASSAY

Change to read:

- **Chemical Methods, Procedure 1**

▲The following procedure is provided for the determination of thiamine as an ingredient of pharmacopeial preparations containing other active constituents. The procedure involves thiamine reacting with potassium ferricyanide and subsequently being determined by fluorescence detection. Throughout the procedure, protect solutions containing and derived from the test specimen and the Reference Standard from the atmosphere and light, preferably by the use of low-actinic glassware.▲USP40

Potassium ferricyanide solution: Dissolve 1.0 g of potassium ferricyanide in water to make 100 mL. Prepare fresh on the day of use.

Oxidizing reagent: Mix 4.0 mL of *Potassium ferricyanide solution* with a sufficient amount of 3.5 N sodium hydroxide to make 100 mL. Use this solution within 4 h.

Quinine sulfate stock solution: Dissolve 10 mg of quinine sulfate in 0.1 N sulfuric acid to make 1000 mL. Preserve this solution, protected from light, in a refrigerator.

Quinine sulfate standard solution: Dilute 0.1 N sulfuric acid with *Quinine sulfate stock solution* (39:1). This solution fluoresces to approximately the same degree as the thiochrome obtained from 1 µg of thiamine hydrochloride and is used to correct the fluorometer at frequent intervals for variation in sensitivity from reading to reading within an assay. Prepare this solution fresh on the day of use.

Standard thiamine hydrochloride stock solution: Transfer about 25 mg of USP Thiamine Hydrochloride RS, accurately weighed, to a 1000-mL volumetric flask. Dissolve the weighed Standard in about 300 mL of dilute alcohol solution (1 in 5) adjusted with 3 N hydrochloric acid to a pH of 4.0, and add the acidified, dilute alcohol to volume. Store in a refrigerator in a light-resistant container. Prepare this stock solution fresh each month.

Standard solution: Dilute a portion of *Standard thiamine hydrochloride stock solution* quantitatively and stepwise with 0.2 N hydrochloric acid to obtain the *Standard solution,* each mL of which represents 0.2 µg of USP Thiamine Hydrochloride RS.

Sample solution: Place in a suitable volumetric flask a sufficient amount of the material to be assayed, accurately weighed or measured by volume as directed, such that when diluted with 0.2 N hydrochloric acid to volume, the resulting solution will contain about 100 µg of thiamine hydrochloride (or mononitrate) per mL. If the sample is difficult to dissolve, the solution may be heated on a steam bath, and then cooled and diluted with the acid to volume. Dilute 5 mL of this solution, quantitatively and stepwise, using 0.2 N hydrochloric acid, to an estimated concentration of 0.2 µg of thiamine hydrochloride (or mononitrate) per mL.

Instrumental conditions

(See *Fluorescence Spectroscopy* ⟨853⟩.)

Mode: Fluorescence

Excitation wavelength: 365 nm

Emission wavelength: 435 nm

Analysis: To each of three or more tubes (or other suitable vessels) of about 40-mL capacity, pipet 5 mL of *Standard solution.* To each of two of these tubes, add rapidly (within 1 to 2 s), with mixing, 3.0 mL of *Oxidizing reagent,* and within 30 s add 20.0 mL of isobutyl alcohol, then mix vigorously for 90 s by shaking the capped tubes manually, or by bubbling a stream of air through the mixture. Prepare a blank in the remaining tube of the standard by substituting for the *Oxidizing reagent* with an equal volume of 3.5 N sodium hydroxide and proceed in the same manner. Into each of three or more similar tubes, pipet 5 mL of the *Sample solution.* Treat these tubes in the same manner as directed for the tubes containing the *Standard solution.* Into each of the six tubes, pipet 2 mL of dehydrated alcohol, swirl for a few seconds, allow the phases to separate, and decant or draw off about 10 mL of the clear, supernatant isobutyl alcohol solution into the standar-

General Chapters

dized cells; then measure the fluorescence in a suitable fluorometer, having an input filter of narrow transmittance range with a maximum at about 365 nm and an output filter of narrow transmittance range with a maximum at about 435 nm. Calculate the quantity, in µg, of thiamine hydrochloride ($C_{12}H_{17}ClN_4OS \cdot HCl$) in each 5 mL of the *Sample solution*:

$$Result = (A - b)/(S - d)$$

A = average fluorometer readings of the portions of the *Sample solution* treated with the *Oxidizing reagent*
b = reading for the blank of the *Sample solution*
S = average fluorometer readings of the portions of the *Standard solution* treated with the *Oxidizing reagent*
d = reading for the blank of the *Standard solution*

Calculate the quantity, in mg, of thiamine hydrochloride ($C_{12}H_{17}ClN_4OS \cdot HCl$) in the assay material on the basis of the aliquots taken. Where indicated, the quantity, in mg, of thiamine mononitrate ($C_{12}H_{17}N_5O_4S$) may be calculated by multiplying the quantity of thiamine hydrochloride ($C_{12}H_{17}ClN_4OS \cdot HCl$) found by 0.9706.

Add the following:

▲The following liquid chromatographic procedures are provided for the determination of thiamine as an active pharmaceutical ingredient, a dietary supplement ingredient, or a component in dietary supplements or pharmaceutical dosage forms. Throughout these procedures, protect solutions containing and derived from the test specimen and the Reference Standards from the atmosphere and light, preferably by the use of low-actinic glassware.▲USP40

Add the following:

• ▲**CHROMATOGRAPHIC METHODS, PROCEDURE 1**

This procedure can be used to determine thiamine in:

- *Oil- and Water-Soluble Vitamins Capsules*
- *Oil- and Water-Soluble Vitamins Tablets*
- *Oil- and Water-Soluble Vitamins with Minerals Capsules*
- *Oil- and Water-Soluble Vitamins with Minerals Tablets*
- *Water-Soluble Vitamins Capsules*
- *Water-Soluble Vitamins Tablets*
- *Water-Soluble Vitamins with Minerals Capsules*
- *Water-Soluble Vitamins with Minerals Tablets*

This is the procedure that involves the extraction of thiamine from the formulation by the *Diluent*, heat, and mechanical shaking.

Unless specified in the individual monographs, the *Standard solution*, *Sample solutions*, and reagent solutions are prepared as follows.

Diluent: Acetonitrile, glacial acetic acid, and water (5:1:94)

Mobile phase: A mixture of methanol, glacial acetic acid, and water (27:1:73) containing 140 mg of sodium 1-hexanesulfonate per 100 mL

Standard solution: Transfer 20 mg of USP Thiamine Hydrochloride RS to a 200-mL volumetric flask, and add 180 mL of *Diluent*. Immerse the flask in a hot water bath maintained at 65°–70° for 10 min with regular shaking or using a vortex mixer until all of the solid materials are dissolved. Chill rapidly in a cold water bath for 10 min to room temperature, and dilute with *Diluent* to volume.

Sample solution for capsules: Weigh NLT 20 capsules in a tared weighing bottle. Open the capsules, without loss of shell material, and transfer the contents to a 100-mL beaker. Remove any contents adhering to the shells by washing with several portions of ether. Discard the washings, and dry the capsule shells with the aid of a current of dry air until the odor of ether is no longer perceptible. Weigh the empty capsule shells in the tared weighing bottle, and calculate the average net weight per capsule. Transfer a portion of the capsule contents, equivalent to 2.5 mg of thiamine hydrochloride, to a 50-mL centrifuge tube. Add 25.0 mL of *Diluent*, and mix using a vortex mixer for 30 s to completely suspend the powder. Immerse the centrifuge tube in a hot water bath maintained at 65°–70°, heat for 5 min, and mix on a vortex mixer for 30 s. Return the tube to the hot water bath, heat for another 5 min, and mix on a vortex mixer for 30 s. Filter a portion of the solution, cool to room temperature, and use the clear filtrate. [NOTE—Use the filtrate within 3 h of filtration.]

Sample solution for tablets: Finely powder NLT 30 tablets. Transfer a portion of the powder, equivalent to 2.5 mg of thiamine hydrochloride, to a 50-mL centrifuge tube. Add 25.0 mL of *Diluent*, and mix using a vortex mixer for 30 s to completely suspend the powder. Immerse the centrifuge tube in a hot water bath maintained at 65°–70°, heat for 5 min, and mix on a vortex mixer for 30 s. Return the tube to the hot water bath, heat for another 5 min, and mix on a vortex mixer for 30 s. Filter a portion of the solution, cool to room temperature, and use the clear filtrate. [NOTE—Use the filtrate within 3 h of filtration.]

Chromatographic system

(See *Chromatography* ⟨621⟩, *System Suitability*.)

Mode: LC

Detector: UV 280 nm

Column: 4.6-mm × 25-cm; packing L1
Flow rate: 1 mL/min
Injection volume: 10 µL
System suitability
Sample: *Standard solution*
Suitability requirements
Relative standard deviation: NMT 3.0%
Analysis
Samples: *Standard solution* and appropriate *Sample solution*
For products containing thiamine hydrochloride, calculate the percentage of the labeled amount of thiamine hydrochloride ($C_{12}H_{17}ClN_4OS \cdot HCl$) in the portion of sample taken:

$$\text{Result} = (r_U/r_S) \times (C_S/C_U) \times 100$$

r_U = peak response of thiamine from the appropriate *Sample solution*
r_S = peak response of thiamine from the *Standard solution*
C_S = concentration of USP Thiamine Hydrochloride RS in the *Standard solution* (mg/mL)
C_U = nominal concentration of thiamine hydrochloride in the appropriate *Sample solution* (mg/mL)

For products containing thiamine mononitrate, calculate the percentage of the labeled amount of thiamine mononitrate ($C_{12}H_{17}N_5O_4S$) in the portion of sample taken:

$$\text{Result} = (r_U/r_S) \times (C_S/C_U) \times (M_{r1}/M_{r2}) \times 100$$

r_U = peak response of thiamine from the appropriate *Sample solution*
r_S = peak response of thiamine from the *Standard solution*
C_S = concentration of USP Thiamine Hydrochloride RS in the *Standard solution* (mg/mL)
C_U = nominal concentration of thiamine mononitrate in the appropriate *Sample solution* (mg/mL)
M_{r1} = molecular weight of thiamine mononitrate, 327.36
M_{r2} = molecular weight of thiamine hydrochloride, 337.27▲USP40

Add the following:

- ▲**Chromatographic Methods, Procedure 2**

This procedure can be used to determine thiamine in:
- *Oil- and Water-Soluble Vitamins Capsules*
- *Oil- and Water-Soluble Vitamins Tablets*
- *Oil- and Water-Soluble Vitamins with Minerals Capsules*
- *Oil- and Water-Soluble Vitamins with Minerals Tablets*
- *Water-Soluble Vitamins Capsules*
- *Water-Soluble Vitamins Tablets*
- *Water-Soluble Vitamins with Minerals Capsules*
- *Water-Soluble Vitamins with Minerals Tablets*

This is the procedure that involves the extraction of thiamine from the formulation by dilute hydrochloric acid, heat, and mechanical shaking.
Unless specified in the individual monographs, the *Standard solution, Sample solutions,* and reagent solutions are prepared as follows.
Solution A: 1.88 g/L of sodium 1-hexanesulfonate in 0.1% phosphoric acid
Mobile phase: *Solution A* and acetonitrile (46:9)
Standard stock solution: 0.1 mg/mL of USP Thiamine Hydrochloride RS in 0.2 N hydrochloric acid
Standard solution: 0.02 mg/mL of USP Thiamine Hydrochloride RS from *Standard stock solution* diluted with 0.2 N hydrochloric acid
Sample solution for capsules: Weigh NLT 20 capsules in a tared weighing bottle. Open the capsules, without the loss of shell material, and transfer the contents to a 100-mL beaker. Remove any contents adhering to the empty shells by washing, if necessary, with several portions of ether. Discard the washings, and dry the capsule shells with the aid of a current of dry air until the odor of ether is no longer perceptible. Weigh the empty capsule shells in the tared weighing bottle, and calculate the average net weight per capsule. Mix a portion of the capsule contents with a volume of 0.2 N hydrochloric acid to obtain a concentration of 0.02 mg/mL of thiamine. Shake the solution for 15 min with a wrist-action shaker, and heat to boiling for 30 min. Cool to room temperature, and filter. Use the clear filtrate.
Sample solution for tablets: Weigh and finely powder NLT 20 tablets. Mix a portion of the powder with a volume of 0.2 N hydrochloric acid to obtain a concentration of 0.02 mg/mL of thiamine. Shake for 15 min with a wrist-action shaker, and heat to boiling for 30 min. Cool to room temperature, and filter. Use the clear filtrate.
Chromatographic system
(See *Chromatography* ⟨621⟩, *System Suitability.*)

General Chapters

Mode: LC
Detector: UV 254 nm
Column: 4.6-mm × 25-cm; packing L1
Flow rate: 2 mL/min
Injection volume: 20 µL

System suitability

Sample: *Standard solution*

Suitability requirements

Relative standard deviation: NMT 3.0%

Analysis

Samples: *Standard solution* and appropriate *Sample solution*

For products containing thiamine hydrochloride, calculate the percentage of the labeled amount of thiamine hydrochloride ($C_{12}H_{17}ClN_4OS \cdot HCl$) in the portion of sample taken:

$$\text{Result} = (r_U/r_S) \times (C_S/C_U) \times 100$$

r_U = peak response of thiamine from the appropriate *Sample solution*
r_S = peak response of thiamine from the *Standard solution*
C_S = concentration of USP Thiamine Hydrochloride RS in the *Standard solution* (mg/mL)
C_U = nominal concentration of thiamine hydrochloride in the appropriate *Sample solution* (mg/mL)

For products containing thiamine mononitrate, calculate the percentage of the labeled amount of thiamine mononitrate ($C_{12}H_{17}N_5O_4S$) in the portion of sample taken:

$$\text{Result} = (r_U/r_S) \times (C_S/C_U) \times (M_{r1}/M_{r2}) \times 100$$

r_U = peak response of thiamine from the appropriate *Sample solution*
r_S = peak response of thiamine from the *Standard solution*
C_S = concentration of USP Thiamine Hydrochloride RS in the *Standard solution* (mg/mL)
C_U = nominal concentration of thiamine mononitrate in the appropriate *Sample solution* (mg/mL)
M_{r1} = molecular weight of thiamine mononitrate, 327.36
M_{r2} = molecular weight of thiamine hydrochloride, 337.27▲USP40

Add the following:

- ▲**CHROMATOGRAPHIC METHODS, PROCEDURE 3**

This procedure can be used to determine thiamine in:

- *Oil- and Water-Soluble Vitamins Capsules*
- *Oil- and Water-Soluble Vitamins Oral Solution*
- *Oil- and Water-Soluble Vitamins Tablets*
- *Oil- and Water-Soluble Vitamins with Minerals Capsules*
- *Oil- and Water-Soluble Vitamins with Minerals Oral Solution*
- *Oil- and Water-Soluble Vitamins with Minerals Tablets*
- *Water-Soluble Vitamins Capsules*
- *Water-Soluble Vitamins Tablets*
- *Water-Soluble Vitamins with Minerals Capsules*
- *Water-Soluble Vitamins with Minerals Oral Solution*
- *Water-Soluble Vitamins with Minerals Tablets*

This is the procedure that involves the extraction of thiamine from the formulation by mixtures of organic solvents, heat, and mechanical shaking.

Unless specified in the individual monographs, the *Standard solutions, Sample solutions,* and reagent solutions are prepared as follows.

Diluent: 25 mg/mL of edetate disodium in water

Mobile phase: Transfer 0.4 mL of triethylamine, 15.0 mL of glacial acetic acid, and 350 mL of methanol to a 2000-mL volumetric flask. Dilute with 0.008 M sodium 1-hexanesulfonate to volume.

Standard stock solution: 0.24 mg/mL of USP Thiamine Hydrochloride RS in *Diluent*, with heating if necessary

Standard solution for capsules/tablets: Transfer 5.0 mL of *Standard stock solution* to a stoppered 125-mL flask. Add 10.0 mL of a mixture of methanol and glacial acetic acid (9:1) and 30.0 mL of a mixture of methanol and ethylene glycol (1:1). Insert the stopper, shake for 15 min in a water bath maintained at 60°, and cool. Filter, and discard the first few mL of the filtrate.

Standard solution for oral solution: 24 µg/mL of USP Thiamine Hydrochloride RS, diluted from the *Standard stock solution* with *Diluent*

Sample solution for capsules: Weigh NLT 20 capsules in a tared weighing bottle. Open the capsules, without the loss of shell material, and transfer the contents to a 100-mL beaker. Remove any contents adhering to the empty shells by wash-

General Chapters

ing, if necessary, with several portions of ether. Discard the washings, and dry the capsule shells with the aid of a current of dry air until the odor of ether is no longer perceptible. Weigh the empty capsule shells in the tared weighing bottle, and calculate the average net weight per capsule. Transfer a portion of the capsule contents, equivalent to 1.2 mg of thiamine hydrochloride, to a stoppered 125-mL flask. Add 10.0 mL of a mixture of methanol and glacial acetic acid (9:1) and 30.0 mL of a mixture of methanol and ethylene glycol (1:1). Insert the stopper, shake for 15 min in a water bath maintained at 60°, and cool. Filter, and discard the first few mL of the filtrate.

Sample solution for oral solution: Equivalent to 24 µg/mL of thiamine hydrochloride or thiamine mononitrate from oral solution in *Diluent*

Sample solution for tablets: Weigh and finely powder NLT 20 tablets. Transfer a portion of the powder, equivalent to 1.2 mg of thiamine, to a stoppered 125-mL flask. Add 10.0 mL of a mixture of methanol and glacial acetic acid (9:1) and 30.0 mL of a mixture of methanol and ethylene glycol (1:1). Insert the stopper, shake for 15 min in a water bath maintained at 60°, and cool. Filter, and discard the first few mL of the filtrate.

Chromatographic system

(See *Chromatography* ⟨621⟩, *System Suitability*.)

Mode: LC

Detector: UV 270 nm

Column: 4.6-mm × 25-cm; packing L7

Column temperature: 50°

Flow rate: 2 mL/min

Injection volume: 5 µL

System suitability

Sample: *Standard solution*

Suitability requirements

Relative standard deviation: NMT 2.0%

Analysis

Samples: Appropriate *Standard solution* and appropriate *Sample solution*

For products containing thiamine hydrochloride, calculate the percentage of the labeled amount of thiamine hydrochloride ($C_{12}H_{17}ClN_4OS \cdot HCl$) in the portion of sample taken:

$$\text{Result} = (r_U/r_S) \times (C_S/C_U) \times 100$$

r_U = peak response of thiamine from the appropriate *Sample solution*
r_S = peak response of thiamine from the appropriate *Standard solution*
C_S = concentration of USP Thiamine Hydrochloride RS in the appropriate *Standard solution* (mg/mL)
C_U = nominal concentration of thiamine in the appropriate *Sample solution* (mg/mL)

For products containing thiamine mononitrate, calculate the percentage of the labeled amount of thiamine mononitrate ($C_{12}H_{17}N_5O_4S$) in the portion of sample taken:

$$\text{Result} = (r_U/r_S) \times (C_S/C_U) \times (M_{r1}/M_{r2}) \times 100$$

r_U = peak response of thiamine from the appropriate *Sample solution*
r_S = peak response of thiamine from the appropriate *Standard solution*
C_S = concentration of USP Thiamine Hydrochloride RS in the appropriate *Standard solution* (mg/mL)
C_U = nominal concentration of thiamine mononitrate in the appropriate *Sample solution* (mg/mL)
M_{r1} = molecular weight of thiamine mononitrate, 327.36
M_{r2} = molecular weight of thiamine hydrochloride, 337.27▲USP40

Add the following:

• ▲**CHROMATOGRAPHIC METHODS, PROCEDURE 4**

This procedure can be used to determine thiamine in:

- An active pharmaceutical ingredient
- A dietary ingredient

This is the procedure that involves the dissolution of the sample directly into the *Mobile phase*. The procedure is applicable for the determination of thiamine hydrochloride or thiamine mononitrate as active pharmaceutical or dietary supplement ingredients.

Unless specified in the individual monographs, the *Standard solution, Sample solution,* and reagent solutions are prepared as follows.

Solution A: 0.005 M sodium 1-octanesulfonate in dilute glacial acetic acid (1 in 100)

Solution B: Methanol and acetonitrile (3:2)

Mobile phase: *Solution A* and *Solution B* (60:40)

Internal standard solution: 2% (v/v) of methylbenzoate in methanol

Standard solution: Prepare a 1-mg/mL solution of USP Thiamine Hydrochloride RS in *Mobile phase*. Transfer 20.0 mL of this solution and 5.0 mL of *Internal standard solution* to a 50-mL volumetric flask, and dilute with *Mobile phase* to volume. The *Standard solution* contains 400 µg/mL of thiamine hydrochloride.

Sample solution: Prepare a 2-mg/mL solution of thiamine hydrochloride or thiamine mononitrate in *Mobile phase*. Transfer 10.0 mL of this solution and 5.0 mL of *Internal standard solution* to a 50-mL volumetric flask, and dilute with *Mobile phase* to volume.

Chromatographic system

(See *Chromatography* ⟨621⟩, *System Suitability*.)

Mode: LC

Detector: UV 254 nm

Column: 4.6-mm × 25-cm; packing L1

Flow rate: 1 mL/min. [NOTE—The flow rate may be adjusted to obtain a retention time of about 12 min for thiamine.]

Injection volume: 10 µL

System suitability

Sample: *Standard solution*

Suitability requirements

Resolution: NLT 4.0 between the thiamine and methylbenzoate peaks

Tailing factor: NMT 2.0 for the thiamine peak

Column efficiency: NLT 1500 theoretical plates for thiamine

Relative standard deviation: NMT 2.0% for the ratios of thiamine peak response to the internal standard peak response

Analysis

Samples: *Standard solution* and *Sample solution*

Calculate the percentage of thiamine hydrochloride ($C_{12}H_{17}ClN_4OS \cdot HCl$) in the portion of sample taken:

$$\text{Result} = (R_U/R_S) \times (C_S/C_U) \times 100$$

R_U = peak response ratio of thiamine to methylbenzoate from the *Sample solution*
R_S = peak response ratio of thiamine to methylbenzoate from the *Standard solution*
C_S = concentration of USP Thiamine Hydrochloride RS in the *Standard solution* (mg/mL)
C_U = concentration of thiamine hydrochloride in the *Sample solution* (mg/mL)

If the active pharmaceutical or dietary supplement ingredient is thiamine mononitrate, calculate the percentage of thiamine mononitrate ($C_{12}H_{17}N_5O_4S$) in the portion of sample taken:

$$\text{Result} = (R_U/R_S) \times (C_S/C_U) \times (M_{r1}/M_{r2}) \times 100$$

R_U = peak response ratio of thiamine to methylbenzoate from the *Sample solution*
R_S = peak response ratio of thiamine to methylbenzoate from the *Standard solution*
C_S = concentration of USP Thiamine Hydrochloride RS in the *Standard solution* (mg/mL)
C_U = concentration of thiamine mononitrate in the *Sample solution* (mg/mL)
M_{r1} = molecular weight of thiamine mononitrate, 327.36
M_{r2} = molecular weight of thiamine hydrochloride, 337.27 ▲USP40

Add the following:

• ▲**CHROMATOGRAPHIC METHODS, PROCEDURE 5**

This procedure can be used to determine thiamine in:

- *Thiamine Hydrochloride Injection*
- *Thiamine Hydrochloride Oral Solution*
- *Thiamine Mononitrate Oral Solution*

This is the procedure that involves the dissolution of the sample directly into the *Mobile phase*. The procedure is applicable for the determination of thiamine hydrochloride or thiamine mononitrate as an active ingredient in the formulations such as those used in *Thiamine Hydrochloride Injection, Thiamine Hydrochloride Oral Solution*, and *Thiamine Mononitrate Oral Solution*.

Unless specified in the individual monographs, the *Standard solution, Internal standard solution*, and *Sample solution* are prepared as follows.

Mobile phase: Methanol and 0.04 M aqueous monobasic potassium phosphate (45:55)

Internal standard solution: 100 µg/mL of methylparaben in *Mobile phase*

Standard stock solution: 500 µg/mL of USP Thiamine Hydrochloride RS in *Mobile phase*

Standard solution: Dilute a mixture of equal volumes of the *Standard stock solution* and *Internal standard solution* with *Mobile phase* to obtain a concentration of USP Thiamine Hydrochloride RS of about 50 µg/mL.

Sample stock solution: Equivalent to 500 µg/mL of thiamine hydrochloride or thiamine mononitrate in *Mobile phase* from an accurately measured volume of oral solution or injection

Sample solution: Dilute a mixture of equal volumes of the *Internal standard solution* and *Sample stock solution* with *Mobile phase* to obtain a concentration of thiamine hydrochloride or thiamine mononitrate of about 50 µg/mL.

Chromatographic system

(See *Chromatography* ⟨621⟩, *System Suitability*.)

Mode: LC

Detector: UV 254 nm

Column: 4.6-mm × 25-cm; packing L1

Flow rate: 1 mL/min

Injection volume: 25 µL

System suitability

Sample: *Standard solution*

[NOTE—The relative retention times for thiamine and methylparaben are about 0.35 and 1.0, respectively.]

Suitability requirements

Resolution: NLT 6.0 between thiamine and methylparaben

Column efficiency: NLT 1500 theoretical plates for thiamine

Relative standard deviation: NMT 2.0% for the ratios of thiamine peak response to the methylparaben peak response

Analysis

Samples: *Standard solution* and *Sample solution*

Calculate the percentage of the labeled amount of thiamine hydrochloride ($C_{12}H_{17}ClN_4OS \cdot HCl$) in the portion of sample taken:

$$\text{Result} = (R_U/R_S) \times (C_S/C_U) \times 100$$

R_U = peak response ratio of thiamine to methylparaben from the *Sample solution*
R_S = peak response ratio of thiamine to methylparaben from the *Standard solution*
C_S = concentration of USP Thiamine Hydrochloride RS in the *Standard solution* (mg/mL)
C_U = nominal concentration of thiamine hydrochloride in the *Sample solution* (mg/mL)

If the products contain thiamine mononitrate, calculate the percentage of the labeled amount of thiamine mononitrate ($C_{12}H_{17}N_5O_4S$) in the portion of sample taken:

$$\text{Result} = (R_U/R_S) \times (C_S/C_U) \times (M_{r1}/M_{r2}) \times 100$$

R_U = peak response ratio of thiamine to methylparaben from the *Sample solution*
R_S = peak response ratio of thiamine to methylparaben from the *Standard solution*
C_S = concentration of USP Thiamine Hydrochloride RS in the *Standard solution* (mg/mL)
C_U = concentration of thiamine mononitrate in the *Sample solution* (mg/mL)
M_{r1} = molecular weight of thiamine mononitrate, 327.36
M_{r2} = molecular weight of thiamine hydrochloride, 337.27▲USP40

Add the following:

• ▲**CHROMATOGRAPHIC METHODS, PROCEDURE 6**

This procedure can be used to determine thiamine in the following:

- *Thiamine Hydrochloride Tablets*

This is the procedure that involves the dissolution of the sample directly into water. The procedure is applicable to the performance (dissolution) test for *Thiamine Hydrochloride Tablets*.

Unless specified in the individual monographs, the *Standard solution* and *Sample solution* are prepared as follows.

Medium: Water, 900 mL

Apparatus 2: 50 rpm

Time: 45 min

Mobile phase: A mixture of methanol, glacial acetic acid, and water (27:1:73) containing 140 mg of sodium 1-hexanesulfonate per 100 mL

Standard solution: A known concentration of USP Thiamine Hydrochloride RS in *Medium* (water)

Sample solution: Filtered portion of the solution under test, suitably diluted with *Medium* (water) if necessary

Chromatographic system

(See *Chromatography* ⟨621⟩, *System Suitability*.)

Mode: LC

Detector: UV 280 nm

Column: 4.6-mm × 25-cm; packing L1

Flow rate: 1 mL/min

Injection volume: 10 µL

System suitability

Sample: *Standard solution*

General Chapters

Suitability requirements

Relative standard deviation: NMT 3.0%

Analysis

Samples: *Standard solution* and *Sample solution*

Calculate the percentage of the labeled amount of thiamine hydrochloride ($C_{12}H_{17}ClN_4OS \cdot HCl$) in the portion of sample taken:

$$\text{Result} = (r_U/r_S) \times (C_S \times D \times V/L) \times 100$$

r_U = peak response of thiamine from the *Sample solution*
r_S = peak response of thiamine from the *Standard solution*
C_S = concentration of USP Thiamine Hydrochloride RS in the *Standard solution* (mg/mL)
D = dilution factor for the *Sample solution*
V = volume of *Medium*, 900 mL
L = labeled amount of thiamine hydrochloride (mg/Tablet)▲USP40

Add the following:

• ▲**Chromatographic Methods, Procedure 7**

This procedure can be used to determine thiamine in:

- *Oil- and Water-Soluble Vitamins Capsules*
- *Oil- and Water-Soluble Vitamins Oral Solution*
- *Oil- and Water-Soluble Vitamins Tablets*
- *Oil- and Water-Soluble Vitamins with Minerals Capsules*
- *Oil- and Water-Soluble Vitamins with Minerals Oral Solution*
- *Oil- and Water-Soluble Vitamins with Minerals Tablets*
- *Water-Soluble Vitamins Capsules*
- *Water-Soluble Vitamins Tablets*
- *Water-Soluble Vitamins with Minerals Capsules*
- *Water-Soluble Vitamins with Minerals Oral Solution*
- *Water-Soluble Vitamins with Minerals Tablets*

This is a newly added procedure as part of the USP monograph modernization efforts. The procedure uses hydrophilic interaction liquid chromatography (HILIC), and the sample preparation involves the extraction of thiamine from the formulation by the *Diluent*, heat, and mechanical shaking.

Unless specified in the individual monographs, the *Standard solution, Sample solutions,* and reagent solutions are prepared as follows.

Diluent: Methanol, glacial acetic acid, and water (50:1:49)

Solution A: 50 mM ammonium formate. Adjust with ammonium hydroxide to a pH of 9.0.

Solution B: Acetonitrile

Mobile phase: Gradient elution. See *Table 1*.

Table 1

Time (min)	Solution A (%)	Solution B (%)
0	11	89
8	17	83
15	23	77
20	30	70
21	50	50
24	50	50
25	11	89
30	11	89

Standard solution: Transfer 20 mg of USP Thiamine Hydrochloride RS to a 200-mL volumetric flask, and add 160 mL of *Diluent*. Immerse the flask in a hot water bath maintained at 65°–70° for 10 min with regular shaking or using a vortex mixer, until all of the solid materials are dissolved. Chill rapidly in a cold water bath for 10 min to room temperature, and dilute with *Diluent* to volume.

Sample solution for capsules: Weigh NLT 20 capsules in a tared weighing bottle. Open the capsules, without the loss of shell material, and transfer the contents to a 100-mL beaker. Remove any contents adhering to the empty shells by washing, if necessary, with several portions of ether. Discard the washings, and dry the capsule shells with the aid of a current of dry air until the odor of ether is no longer perceptible. Weigh the empty capsule shells in the tared weighing bottle, and calculate the average net weight per capsule. Transfer a portion of the capsule contents, equivalent to 2.5 mg of thiamine

General Chapters

hydrochloride, to a 50-mL centrifuge tube. Add 25.0 mL of *Diluent*, and mix using a vortex mixer for 30 s to completely suspend the powder. Immerse the centrifuge tube in a hot water bath maintained at 68°, heat for 10 min, and mix on a vortex mixer for 30 s. Return the tube to the hot water bath, heat for another 10 min, and mix on a vortex mixer for 30 s. Filter a portion of the solution, cool to room temperature, and use the clear filtrate.

Sample solution for oral solution: Equivalent to 0.1 mg/mL of thiamine hydrochloride in *Diluent*, from an accurately measured volume of oral solution. In an appropriate volumetric flask, dissolve the sample with *Diluent* to about 80% of the total volume, immerse the flask in a water bath maintained at 68° for 10 min, chill rapidly in a cold water bath to room temperature, and dilute with *Diluent*. Mix well, and filter a portion of the solution; finally, use the clear filtrate.

Sample solution for tablets: Finely powder NLT 30 tablets. Transfer a portion of the powder, equivalent to 2.5 mg of thiamine hydrochloride, to a 50-mL centrifuge tube. Add 25.0 mL of *Diluent*, and mix using a vortex mixer for 30 s to completely suspend the powder. Immerse the centrifuge tube in a hot water bath maintained at 65°–70°, heat for 10 min, and mix on a vortex mixer for 30 s. Return the tube to the hot water bath, heat for another 10 min, and mix on a vortex mixer for 30 s. Filter a portion of the solution, cool to room temperature, and use the clear filtrate. [NOTE—Use the filtrate within 3 h of filtration.]

Chromatographic system

(See *Chromatography* ⟨621⟩, *System Suitability*.)

Mode: LC

Detector: UV 267 nm

Column: 4.6-mm × 15-cm; 3.5-µm packing L68

Column temperature: 40°

Flow rate: 1.2 mL/min

Injection volume: 10 µL

System suitability

Sample: *Standard solution*

Suitability requirements

Relative standard deviation: NMT 2.0%

Analysis

Samples: *Standard solution* and appropriate *Sample solution*

For products containing thiamine hydrochloride, calculate the percentage of the labeled amount of thiamine hydrochloride ($C_{12}H_{17}ClN_4OS \cdot HCl$) in the portion of sample taken:

$$\text{Result} = (r_U/r_S) \times (C_S/C_U) \times 100$$

r_U = peak response of thiamine from the appropriate *Sample solution*
r_S = peak response of thiamine from the *Standard solution*
C_S = concentration of USP Thiamine Hydrochloride RS in the *Standard solution* (mg/mL)
C_U = nominal concentration of thiamine in the appropriate *Sample solution* (mg/mL)

For products containing thiamine mononitrate, calculate the percentage of the labeled amount of thiamine mononitrate ($C_{12}H_{17}N_5O_4S$) in the portion of sample taken:

$$\text{Result} = (r_U/r_S) \times (C_S/C_U) \times (M_{r1}/M_{r2}) \times 100$$

r_U = peak response of thiamine from the appropriate *Sample solution*
r_S = peak response of thiamine from the *Standard solution*
C_S = concentration of USP Thiamine Hydrochloride RS in the *Standard solution* (mg/mL)
C_U = nominal concentration of thiamine mononitrate in the appropriate *Sample solution* (mg/mL)
M_{r1} = molecular weight of thiamine mononitrate, 327.36
M_{r2} = molecular weight of thiamine hydrochloride, 337.27 ▲USP40

ADDITIONAL REQUIREMENTS

- **USP REFERENCE STANDARDS ⟨11⟩**

USP Thiamine Hydrochloride RS

General Chapters

〈541〉 TITRIMETRY

DIRECT TITRATIONS

Direct titration is the treatment of a soluble substance, contained in solution in a suitable vessel (the titrate), with an appropriate standardized solution (the titrant), the endpoint being determined instrumentally or visually with the aid of a suitable indicator.

The titrant is added from a suitable buret and is so chosen, with respect to its strength (normality), that the volume added is between 30% and 100% of the rated capacity of the buret. [NOTE—Where less than 10 mL of titrant is required, a suitable microburet is to be used.] The endpoint is approached directly but cautiously, and finally the titrant is added dropwise from the buret in order that the final drop added will not overrun the endpoint. The quantity of the substance being titrated may be calculated from the volume and the normality or molarity factor of the titrant and the equivalence factor for the substance given in the individual monograph.

RESIDUAL TITRATIONS

Some Pharmacopeial assays require the addition of a measured volume of a volumetric solution, in excess of the amount actually needed to react with the substance being assayed, the excess of this solution then being titrated with a second volumetric solution. This constitutes a residual titration and is known also as a "back titration." The quantity of the substance being titrated may be calculated from the difference between the volume of the volumetric solution originally added, corrected by means of a blank titration, and that consumed by the titrant in the back titration, due allowance being made for the respective normality or molarity factors of the two solutions, and the equivalence factor for the substance given in the individual monograph.

COMPLEXOMETRIC TITRATIONS

Successful complexometric titrations depend on several factors. The equilibrium constant for formation of the titrant-analyte complex must be sufficiently large that, at the endpoint, very close to 100% of the analyte has been complexed. The final complex must be formed rapidly enough that the analysis time is practical. When the analytical reaction is not rapid, a residual titration may sometimes be successful.

In general, complexometric indicators are themselves complexing agents. The reaction between metal ion and indicator must be rapid and reversible. The equilibrium constant for formation of the metal-indicator complex should be large enough to produce a sharp color change but must be less than that for the metal-titrant complex. Indicator choice is also restricted by the pH range within which the complexation reaction must be carried out and by interference of other ions arising from the sample or the buffer. Interfering ions may often be masked or "screened" via addition of another complexing agent. (The masking technique is also applicable to redox titrations.)

OXIDATION-REDUCTION (REDOX) TITRATIONS

Determinations may often be carried out conveniently by the use of a reagent that brings about oxidation or reduction of the analyte. Many redox titration curves are not symmetric about the equivalence point, and thus graphical determination of the endpoint is not possible; but indicators are available for many determinations, and a redox reagent can often serve as its own indicator. As in any type of titration, the ideal indicator changes color at an endpoint that is as close as possible to the equivalence point. Accordingly, when the titrant serves as its own indicator, the difference between the endpoint and the equivalence point is determined only by the analyst's ability to detect the color change. A common example is the use of permanganate ion as an oxidizing titrant since a slight excess can easily be detected by its pink color. Other titrants that may serve as their own indicators are iodine, cerium (IV) salts, and potassium dichromate. In most cases, however, the use of an appropriate redox indicator will yield a much sharper endpoint.

It may be necessary to adjust the oxidation state of the analyte prior to titration through use of an appropriate oxidizing or reducing agent; the excess reagent must then be removed, e.g., through precipitation. This is nearly always the practice in the determination of oxidizing agents since most volumetric solutions of reducing agents are slowly oxidized by atmospheric oxygen.

TITRATIONS IN NONAQUEOUS SOLVENTS

Acids and bases have long been defined as substances that furnish, when dissolved in water, hydrogen and hydroxyl ions, respectively. This definition, introduced by Arrhenius, fails to recognize the fact that properties characteristic of acids or bases may be developed also in other solvents. A more generalized definition is that of Brönsted, who defined an acid as a substance that furnishes protons, and a base as a substance that combines with protons. Even broader is the definition of Lewis, who

defined an acid as any material that will accept an electron pair, a base as any material that will donate an electron pair, and neutralization as the formation of a coordination bond between an acid and a base.

The apparent strength of an acid or a base is determined by the extent of its reaction with a solvent. In water solution all strong acids appear equally strong because they react with the solvent to undergo almost complete conversion to oxonium ion and the acid anion (leveling effect). In a weakly protophilic solvent such as acetic acid the extent of formation of the acetate acidium ion shows that the order of decreasing strength for acids is perchloric, hydrobromic, sulfuric, hydrochloric, and nitric (differentiating effect).

Acetic acid reacts incompletely with water to form oxonium ion and is, therefore, a weak acid. In contrast, it dissolves in a base such as ethylenediamine, and reacts so completely with the solvent that it behaves as a strong acid. The same holds for perchloric acid.

This leveling effect is observed also for bases. In sulfuric acid almost all bases appear to be of the same strength. As the acid properties of the solvent decrease in the series sulfuric acid, acetic acid, phenol, water, pyridine, and butylamine, the bases become progressively weaker until all but the strongest have lost their basic properties. In order of decreasing strength, the strong bases are sodium 2-aminoethoxide, potassium methoxide, sodium methoxide, and lithium methoxide.

Many water-insoluble compounds acquire enhanced acidic or basic properties when dissolved in organic solvents. Thus the choice of the appropriate solvent permits the determination of a variety of such materials by nonaqueous titration. Furthermore, depending upon which part of a compound is the physiologically active moiety, it is often possible to titrate that part by proper selection of solvent and titrant. Pure compounds can be titrated directly, but it is often necessary to isolate the active ingredient in pharmaceutical preparations from interfering excipients and carriers.

The types of compounds that may be titrated as acids include acid halides, acid anhydrides, carboxylic acids, amino acids, enols such as barbiturates and xanthines, imides, phenols, pyrroles, and sulfonamides. The types of compounds that may be titrated as bases include amines, nitrogen-containing heterocyclic compounds, oxazolines, quaternary ammonium compounds, alkali salts of organic acids, alkali salts of weak inorganic acids, and some salts of amines. Many salts of halogen acids may be titrated in acetic acid or acetic anhydride after the addition of mercuric acetate, which removes halide ion as the unionized mercuric halide complex and introduces the acetate ion.

For the titration of a basic compound, a volumetric solution of perchloric acid in glacial acetic acid is preferred, although perchloric acid in dioxane is used in special cases. The calomel-glass electrode system is useful in this case. In acetic acid solvent, this electrode system functions as predicted by theory.

For the titration of an acidic compound, two classes of titrant are available: the alkali metal alkoxides and the tetraalkylammonium hydroxides. A volumetric solution of sodium methoxide in a mixture of methanol and toluene is used frequently, although lithium methoxide in methanol-benzene solvent is used for those compounds yielding a gelatinous precipitate on titration with sodium methoxide.

The alkali error limits the use of the glass electrode as an indicating electrode in conjunction with alkali metal alkoxide titrants, particularly in basic solvents. Thus, the antimony-indicating electrode, though somewhat erratic, is used in such titrations. The use of quaternary ammonium hydroxide compounds, e.g., tetra-*n*-butylammonium hydroxide and trimethylhexadecylammonium hydroxide (in benzene-methanol or isopropyl alcohol), has two advantages over the other titrants in that (a) the tetraalkylammonium salt of the titrated acid is soluble in the titration medium, and (b) the convenient and well-behaved calomel-glass electrode pair may be used to conduct potentiometric titrations.

Because of interference by carbon dioxide, solvents for acidic compounds need to be protected from excessive exposure to the atmosphere by a suitable cover or by an inert atmosphere during the titration. Absorption of carbon dioxide may be determined by performing a blank titration. The blank should not exceed 0.01 mL of 0.1 N sodium methoxide VS per mL of solvent.

The endpoint may be determined visually by color change, or potentiometrically, as indicated in the individual monograph. If the calomel reference electrode is used, it is advantageous to replace the aqueous potassium chloride salt bridge with 0.1 N lithium perchlorate in glacial acetic acid for titrations in acidic solvents or potassium chloride in methanol for titrations in basic solvents.

Where these or other mixtures are specified in individual monographs, the calomel reference electrode is modified by first removing the aqueous potassium chloride solution and residual potassium chloride, if any, by rinsing with water, then eliminating residual water by rinsing with the required nonaqueous solvent, and finally filling the electrode with the designated nonaqueous mixture.

In nearly all cases, except those where silver ion might interfere, a silver-silver chloride reference electrode may be substituted for the calomel electrode. The silver-silver chloride electrode is more rugged, and its use helps to eliminate toxic mercury salts from the laboratory. Generally, a salt bridge may be used to circumvent interference by silver ion.

The more useful systems for titration in nonaqueous solvents are listed in *Table 1*.

Table 1. Systems for Nonaqueous Titrations

Type of	Acidic (for titration of bases and their salts)	Relatively Neutral (for differential titration of bases)	Basic (for titration of acids)	Relatively Neutral (for differential titration of acids)
Solvent[1]	Glacial Acetic Acid	Acetonitrile	Dimethylformamide	Acetone
	Acetic Anhydride	Alcohols	*n*-Butylamine	Acetonitrile
	Formic Acid	Chloroform	Pyridine	Methyl Ethyl Ketone
	Propionic Acid	Benzene	Ethylenediamine	Methyl Isobutyl Ketone
	Sulfuryl Chloride	Toluene	Morpholine	*tert*-Butyl Alcohol
		Chlorobenzene		
		Ethyl Acetate		
		Dioxane		
Indicator	Crystal Violet	Methyl Red	Thymol Blue	Azo Violet
	Quinaldine Red	Methyl Orange	Thymolphthalein	Bromothymol Blue
	p-Naphtholbenzein	*p*-Naphtholbenzein	Azo Violet	*p*-Hydroxyazobenzene
	Alphezurine 2-G		*o*-Nitroaniline	Thymol Blue
	Malachite Green		*p*-Hydroxyazobenzene	
Electrodes	Glass–calomel	Glass–calomel	Antimony–calomel	Antimony–calomel
	Glass–silver–silver chloride	Calomel–silver–silver chloride	Antimony–glass	Glass–calomel
	Mercury–mercuric acetate		Antimony–antimony[2]	Glass–platinum[2]
			Platinum–calomel	
			Glass–calomel	

[1] Relatively neutral solvents of low dielectric constant such as benzene, toluene, chloroform, or dioxane may be used in conjunction with any acidic or basic solvent in order to increase the sensitivity of the titration end-points.
[2] In titrant.

INDICATOR AND POTENTIOMETRIC ENDPOINT DETECTION

The simplest and most convenient method by which the equivalence point, i.e., the point at which the stoichiometric analytical reaction is complete, may be determined is with the use of indicators. These chemical substances, usually colored, respond to changes in solution conditions before and after the equivalence point by exhibiting color changes that may be taken visually as the endpoint, a reliable estimate of the equivalence point.

A useful method of endpoint determination results from the use of electrochemical measurements. If an indicator electrode, sensitive to the concentration of the species undergoing titrimetric reaction, and a reference electrode, whose potential is insensitive to any dissolved species, are immersed in the titrate to form a galvanic cell, the potential difference between the electrodes may be sensed by a pH meter and used to follow the course of the reaction. Where such a series of measurements is plotted correctly (i.e., for an acid-base titration, pH versus mL of titrant added; for a precipitimetric, complexometric, or oxidation-reduction titration, mV versus mL of titrant added), a sigmoid curve results with a rapidly changing portion (the "break") in the vicinity of the equivalence point. The midpoint of this linear vertical portion or the inflection point may be taken as the endpoint. The equivalence point may also be determined mathematically without plotting a curve. However, it should be noted that in asymmetrical reactions, which are reactions in which the number of anions reacting is not the same as the number of cations reacting, the endpoint as defined by the inflection of the titration curve does not occur exactly at the stoichiometric equivalence point. Thus, potentiometric endpoint detection by this method is not suitable in the case of asymmetric reactions, examples of which are the precipitation reaction,

$$2Ag^{+} + CrO_4^{-2}$$

and the oxidation-reduction reaction,

$$5Fe^{+2} + MnO_4^{-}.$$

All acid-base reactions, however, are symmetrical. Thus, potentiometric endpoint detection may be employed in acid-base titrations and in other titrations involving symmetrical reversible reactions where an indicator is specified, unless otherwise directed in the individual monograph.

Two types of automatic electrometric titrators are available. The first is one that carries out titrant addition automatically and records the electrode potential differences during the course of titration as the expected sigmoid curve. In the second type, titrant addition is performed automatically until a preset potential or pH, representing the endpoint, is reached, at which point the titrant addition ceases.

Several acceptable electrode systems for potentiometric titrations are summarized in *Table 2*.

Table 2. Potentiometric Titration Electrode Systems

Titration	Indicating Electrode	Equation[1]	Reference Electrode	Applicability[2]
Acid-base	Glass	$E = k + 0.0591\ pH$	Calomel or silver–silver chloride	Titration of acids and bases
Precipitimetric (silver)	Silver	$E = E^\circ + 0.0591 \log [Ag^+]$	Calomel (with potassium nitrate salt bridge)	Titration with or of silver involving halides or thiocyanate
Complexometric	Mercury–mercury(II)	$E = E^\circ + 0.0296(\log k' - pM)$	Calomel	Titration of various metals (M), e.g., Mg^{+2}, Ca^{+2} Al^{+3}, Bi^{+3}, with EDTA
Oxidation–reduction	Platinum	$E = E^\circ + (0.0591/n) \times \log [ox]/[red]$	Calomel or silver–silver chloride	Titrations with arsenite, bromine, cerate, dichromate, exacyonoferrate(III), iodate, nitrite, permanganate, thiosulfate

[1] Appropriate form of Nernst equation describing the indicating electrode system: k = glass electrode constant; k′ = constant derived from Hg–Hg(II)–EDTA equilibrium; M = any metal undergoing EDTA titration; [ox] and [red] from the equation, $ox + ne \leftrightarrows red$.
[2] Listing is representative but not exhaustive.

BLANK CORRECTIONS

As previously noted, the endpoint determined in a titrimetric assay is an estimate of the reaction equivalence point. The validity of this estimate depends upon, among other factors, the nature of the titrate constituents and the concentration of the titrant. An appropriate *blank correction* is employed in titrimetric assays to enhance the reliability of the endpoint determination. Such a blank correction is usually obtained by means of a *residual blank titration*, wherein the required procedure is repeated in every detail except that the substance being assayed is omitted. In such instances, the actual volume of titrant equivalent to the substance being assayed is the difference between the volume consumed in the residual blank titration and that consumed in the titration with the substance present. The corrected volume so obtained is used in calculating the quantity of the substance being titrated, in the same manner as prescribed under *Residual Titrations*. Where potentiometric endpoint detection is employed, the blank correction is usually negligible.

⟨551⟩ VITAMIN E ASSAY

INTRODUCTION

The following liquid chromatographic procedures are provided for the determination of vitamin E as an active pharmaceutical ingredient, as a dietary supplement ingredient, or as a component in compendial dosage forms in the forms of alpha tocopherol ($C_{29}H_{50}O_2$), alpha tocopheryl acetate ($C_{31}H_{52}O_3$), or alpha tocopheryl acid succinate ($C_{33}H_{54}O_5$).

Throughout this assay, protect solutions containing, and derived from, the test specimen and the Reference Standard from the atmosphere and light, preferably by the use of a blanket of inert gas and low-actinic glassware.

Where vitamin E (alpha tocopherol, alpha tocopheryl acetate, or alpha tocopheryl acid succinate) is specified in the following procedure, use the chemical form present in the formulation and the relevant USP Reference Standard.

ASSAY

- **Procedure 1**
  - This procedure can be used to determine vitamin E in:
    - Oil-Soluble Vitamins Tablets
    - Oil-Soluble Vitamins Capsules
    - Oil-Soluble Vitamins with Minerals Tablets
    - Oil-Soluble Vitamins with Minerals Capsules
    - Oil- and Water-Soluble Vitamins Tablets
    - Oil- and Water-Soluble Vitamins Capsules
    - Oil- and Water-Soluble Vitamins with Minerals Tablets
    - Oil- and Water-Soluble Vitamins with Minerals Capsules
  - This is a neutral procedure that involves the use of dimethyl sulfoxide to dissolve the excipients in the sample, followed by a liquid–liquid extraction of vitamin E with hexane. The hexane extract is then evaporated in vacuum to dryness, and the residue is reconstituted in methanol prior injection into the chromatograph.
  - Unless specified in the individual monographs, the *System suitability solution*, *Standard solution*, *Sample solutions*, and reagent solutions are prepared as follows.

Solution A: Phosphoric acid solution (1 in 100) in water
Mobile phase: Methanol and *Solution A* (19:1)

System suitability solution: Prepare a 0.65-mg/mL solution of USP Ergocalciferol RS in methanol. Transfer 1.0 mL of this solution to a 100-mL volumetric flask containing 100 mg of USP Alpha Tocopheryl Acetate RS. Dissolve in 30 mL of methanol, with the aid of sonication if necessary, and dilute with methanol to volume. Store this solution in a refrigerator.

Standard solution: 2 mg/mL of USP Alpha Tocopherol RS, USP Alpha Tocopheryl Acetate RS, or USP Alpha Tocopheryl Acid Succinate RS in methanol

Sample solution for Tablets: Finely powder NLT 20 Tablets. Transfer a portion of the powder typically equivalent to 20 mg of the vitamin E form under testing but not exceeding 7.5 g of the powder, to a centrifuge tube having a polytef-lined screw cap. Add about 2 mL of dimethyl sulfoxide per each g of powdered Tablets, and about 3 mL of *n*-hexane each per g of powdered Tablets, and shake for 45 min on a shaker in a water bath maintained at 60°. [NOTE—Set up the shaker to ensure that the contents of the container are mixed vigorously and thoroughly.] Centrifuge at 3000 rpm for 10 min, and transfer the hexane layer by means of a pipet to a volumetric flask. [NOTE—Volumetric flask size: NLT 20 mL.] Add 3 mL of *n*-hexane per each g of powdered Tablets to the dimethyl sulfoxide layer, shake thoroughly for 5 min, and transfer the hexane layer by means of a pipet to the same volumetric flask. Repeat this extraction with three additional portions of *n*-hexane. Dilute the extracts in the volumetric flask with *n*-hexane to volume. Transfer NLT 20 mL of this solution to a suitable container, and evaporate in vacuum at room temperature to dryness. Transfer the residue with the aid of methanol to a suitable volumetric flask, and dilute with methanol to volume to obtain a concentration of 2 mg/mL of alpha tocopherol, alpha tocopheryl acetate, or alpha tocopheryl acid succinate.

Sample solution for Capsules: Transfer the contents of NLT 20 Capsules to a suitable container, mix, and weigh. Transfer a portion of the mixture, typically equivalent to 20 mg of the vitamin E form under testing but not exceeding 7.5 g of the mixture, to a centrifuge tube having a polytef-lined screw cap. [NOTE—For hard gelatin Capsules, remove, as completely as possible, the contents of NLT 20 Capsules by cutting open the Capsule shells, transferring the shells and their contents to a suitable container, and triturating to a homogeneous mass. Transfer a portion of the mass, typically equivalent to 20 mg of the vitamin E form under testing but not exceeding 7.5 g of the mixture to a centrifuge tube having a polytef-lined screw cap.] Add about 2 mL of dimethyl sulfoxide per each g of Capsule contents, and about 3 mL of *n*-hexane per each g of Capsule contents, and shake for 45 min on a shaker in a water bath maintained at 60°. [NOTE—Set up the shaker to ensure that the contents of the container are mixed vigorously and thoroughly.] Centrifuge at 3000 rpm for 10 min, and transfer the hexane layer by means of a pipet to a volumetric flask. [NOTE—Volumetric flask size: NLT 20 mL.] Add 3 mL of *n*-hexane per each g of Capsule contents to the dimethyl sulfoxide layer, shake thoroughly for 5 min, and transfer the hexane layer by means of a pipet to the same volumetric flask. Repeat this extraction with three additional portions of *n*-hexane. Dilute the extracts in the volumetric flask with *n*-hexane to volume. Transfer NLT 20 mL of this solution to a suitable container, and evaporate in vacuum at room temperature to dryness. Transfer the residue with the aid of methanol to a suitable volumetric flask, and dilute with methanol to volume to obtain a concentration of 2 mg/mL of alpha tocopherol, alpha tocopheryl acetate, or alpha tocopheryl acid succinate.

Chromatographic system

(See *Chromatography* ⟨621⟩, *System Suitability.*)

Mode: LC

Detector: UV 254 nm

Column: 8-mm × 10-cm; 5-µm packing L1

Flow rate: 2 mL/min

Injection volume: 100 µL

System suitability

Samples: *System suitability solution* and *Standard solution*

[NOTE—The relative retention times for ergocalciferol and alpha tocopheryl acetate are about 0.5 and 1.0, respectively.]

Suitability requirements

Resolution: NLT 12 between ergocalciferol and alpha tocopheryl acetate, *System suitability solution*

Tailing factor: 0.8–1.2, *System suitability solution*

Relative standard deviation: NMT 3.0%, *Standard solution*

Analysis

Samples: *Standard solution* and *Sample solution*

Calculate the percentage of the labeled amount of alpha tocopherol, alpha tocopheryl acetate, or alpha tocopheryl acid succinate in the portion of the sample taken:

$$\text{Result} = (r_U/r_S) \times (C_S/C_U) \times 100$$

r_U = peak response of the relevant vitamin E form from the *Sample solution*

r_S = peak response of the relevant vitamin E form from the *Standard solution*

C_S = concentration of the relevant vitamin E form of the corresponding USP Reference Standard in the *Standard solution* (mg/mL)

C_U = nominal concentration of the corresponding form of vitamin E in the *Sample solution* (mg/mL)

- **PROCEDURE 2**
  - This procedure can be used for the formulations containing vitamins A, D, and E. Application includes:
    - Oil-Soluble Vitamins Tablets

- Oil-Soluble Vitamins Capsules
- Oil-Soluble Vitamins with Minerals Tablets
- Oil-Soluble Vitamins with Minerals Capsules
- Oil- and Water-Soluble Vitamins Tablets
- Oil- and Water-Soluble Vitamins Capsules
- Oil- and Water-Soluble Vitamins with Minerals Tablets
- Oil- and Water-Soluble Vitamins with Minerals Capsules

- It involves the treatment of sample with methanolic sulfuric acid, followed by extraction with 2,2,4-trimethylpentane.
- Unless specified in the individual monographs, the *System suitability solution, Standard solution, Sample solutions,* and reagent solutions are prepared as follows.

Mobile phase: Mix 240 mL of methanol with 10 mL of water, followed by 0.5 mL of 50% phosphoric acid, and dilute with acetonitrile to 1000 mL.

3 N methanolic sulfuric acid solution: Cautiously add 9 mL of sulfuric acid to 80 mL of methanol in a 100-mL volumetric flask. Cool, and dilute with methanol to volume.

Sodium ascorbate–pyrogallol solution: Transfer 10 g of sodium ascorbate and 5 g of pyrogallol to a 100-mL volumetric flask, and add sufficient water to dissolve. Add 1.7 mL of sulfuric acid, and dilute with water to volume.

Lecithin solution: 5 mg/mL of lecithin in 2,2,4-trimethylpentane

System suitability solution: 2 mg/mL each of USP Alpha Tocopherol RS, USP Alpha Tocopheryl Acetate RS, and USP Alpha Tocopheryl Acid Succinate RS in methanol

Standard solution: 2 mg/mL of USP Alpha Tocopherol RS, USP Alpha Tocopheryl Acetate RS, or USP Alpha Tocopheryl Acid Succinate RS in methanol

Sample solution for Tablets: [NOTE—This preparation is suitable for the determination of vitamin A, vitamin D, and vitamin E when present in the formulation. The sample amount may be adjusted depending on the presence or absence of the appropriate vitamins.] Finely powder NLT 20 Tablets. Use a portion of the powder nominally equivalent to an amount 90 mg of alpha tocopherol, alpha tocopheryl acetate, or alpha tocopheryl acid succinate. Add 0.5 g of sodium bicarbonate, 1.5 mL of *Lecithin solution,* and 12.5 mL of 2,2,4-trimethylpentane, and disperse on a vortex mixer. Add 6 mL of *Sodium ascorbate–pyrogallol solution,* shake slowly, and allow the solution to degas. Continue shaking until the evolution of gas has ceased, and then shake for an additional 12 min. Add 6 mL of dimethyl sulfoxide, mix on a vortex mixer to form a suspension, and shake for 12 min. Add 6 mL of *3 N methanolic sulfuric acid solution,* mix on a vortex mixer to form a suspension, and shake for 12 min. Add 12.5 mL of 2,2,4-trimethylpentane, mix on a vortex mixer to form a suspension, and shake for 10 min. Centrifuge for 10 min to break up the emulsion and to clarify the supernatant. Transfer a volume of the supernatant 2,2,4-trimethylpentane layer to a suitable volumetric flask, the volume of the specimen withdrawn from the 2,2,4-trimethylpentane layer and the size of the volumetric flask being such that the final concentration of the *Sample solution* is equivalent to that of the *Standard solution.* Evaporate nearly to dryness, add several mL of methanol, and evaporate the remaining 2,2,4-trimethylpentane. Dilute with methanol to volume.

Sample solution for Capsules: [NOTE—This preparation is suitable for the determination of vitamin A, vitamin D, and vitamin E when present in the formulation. The sample amount may be adjusted depending on the presence or absence of the appropriate vitamins.] Weigh NLT 20 Capsules in a tared weighing bottle. Using a sharp blade if necessary, carefully open the Capsules, without loss of shell material, and transfer the contents to a 100-mL beaker. Remove any contents adhering to the empty shells by washing with several portions of ether. Discard the washings, and dry the Capsule shells with the aid of a current of dry air. Weigh the empty Capsule shells in the tared weighing bottle, and calculate the net weight of the Capsule contents. Transfer a portion of the Capsule contents, equivalent to 55 mg of vitamin E, to a container having a polytef-lined screw cap. Add 0.5 g of sodium bicarbonate, 1.5 mL of *Lecithin solution,* and 12.5 mL of 2,2,4-trimethylpentane, and disperse on a vortex mixer. Add 6 mL of *Sodium ascorbate–pyrogallol solution,* shake slowly, and allow the solution to degas. Continue shaking until the evolution of gas has ceased, and then shake for an additional 12 min. Add 6 mL of dimethyl sulfoxide, mix on a vortex mixer to form a suspension, and shake for 12 min. Add 6 mL of *3 N methanolic sulfuric acid solution,* mix on a vortex mixer to form a suspension, and shake for 12 min. Add 12.5 mL of 2,2,4-trimethylpentane, mix on a vortex mixer to form a suspension, and shake for 10 min. Centrifuge for 10 min to break up the emulsion and to clarify the supernatant layer. Transfer a volume of the supernatant 2,2,4-trimethylpentane layer to a suitable volumetric flask, the volume of the specimen withdrawn from the 2,2,4-trimethylpentane layer and the size of the volumetric flask being such that the final concentration of the *Sample solution* is equivalent to that of the *Standard solution.* Evaporate nearly to dryness, add several mL of methanol, and evaporate the remaining 2,2,4-trimethylpentane. Dilute with methanol to volume.

Chromatographic system

(See *Chromatography* ⟨621⟩, *System Suitability.*)

Mode: LC

Detector: UV 280 nm

Column: 4.6-mm × 25-cm; 5-µm packing L1

Flow rate: 1.5 mL/min

Injection volume: 25 µL

General Chapters

System suitability

Samples: *System suitability solution* and *Standard solution*

[NOTE—The relative retention times for alpha tocopheryl acid succinate, alpha tocopherol, and alpha tocopheryl acetate are about 0.6, 0.8, and 1.0, respectively]

Suitability requirements

Resolution: NLT 4.0 between alpha tocopheryl acid succinate and alpha tocopherol; NLT 3.0 between alpha tocopherol and alpha tocopheryl acetate, *System suitability solution*

Relative standard deviation: NMT 3.0%, *Standard solution*

Analysis

Samples: *Standard solution* and *Sample solution*

Calculate the percentage of the labeled amount of alpha tocopherol, alpha tocopheryl acetate, alpha tocopheryl acid succinate in the portion of the sample taken:

$$\text{Result} = (r_U/r_S) \times (C_S/C_U) \times 100$$

r_U = peak response of the relevant vitamin E form from the *Sample solution*

r_S = peak response of the relevant vitamin E form from the *Standard solution*

C_S = concentration of the relevant vitamin E form of the corresponding USP Reference Standard in the *Standard solution* (mg/mL)

C_U = nominal concentration of the corresponding form of vitamin E in the *Sample solution* (mg/mL)

[NOTE—Account for the initial extraction volume of 26.5 mL of 2,2,4-trimethylpentane and the dilution factor to exchange the solvent from 2,2,4-trimethylpentane to methanol to calculate the nominal concentration.]

- **PROCEDURE 3**
  - This procedure can be used for the determination of vitamin E in:
    - Oil-Soluble Vitamins Tablets
    - Oil-Soluble Vitamins Capsules
    - Oil-Soluble Vitamins with Minerals Tablets
    - Oil-Soluble Vitamins with Minerals Capsules
    - Oil- and Water-Soluble Vitamins Tablets
    - Oil- and Water-Soluble Vitamins Capsules
    - Oil- and Water-Soluble Vitamins with Minerals Tablets
    - Oil- and Water-Soluble Vitamins with Minerals Capsules
    - Oil- and Water-Soluble Vitamins Oral Solution
    - Oil- and Water-Soluble Vitamins with Minerals Oral Solution
  - It involves the saponification of the sample, followed by a liquid–liquid extraction of vitamin E from the sample with *n*-hexane. Evaporate the hexane extract to dryness, and reconstitute the residue in a mixture of acetonitrile and ethyl acetate (1:1).
  - Unless specified in the individual monographs, the *Standard solution*, *Sample solutions*, and reagent solutions are prepared as follows.

Mobile phase: Methanol, acetonitrile, and *n*-hexane (46.5: 46.5: 7.0)

Diluent: Acetonitrile and ethyl acetate (1:1)

Potassium hydroxide solution: [NOTE—Used for the Oral Solution sample.] Transfer 90 g of potassium hydroxide pellets to a 100-mL volumetric flask containing 60 mL of water. Mix to dissolve, cool, and dilute with water to volume.

Standard solution: 0.3 mg/mL of USP Alpha Tocopherol RS in *Diluent*

Sample solution for Tablets: Finely powder NLT 20 Tablets. Transfer a portion of the powder, equivalent to 8 mg of alpha tocopherol, to a 125-mL flask fitted with a ground-glass joint. Add 25.0 mL of water, 25.0 mL of dehydrated alcohol, and 3.5 g of potassium hydroxide pellets. Shake for 1 h in a water bath maintained at 55°. Cool, and transfer with the aid of a minimum volume of water to a 125-mL separatory funnel. Rinse the flask with 50 mL of *n*-hexane, and add the rinsing to the separatory funnel. Insert the stopper, shake vigorously for 60 s, and allow the layers to separate. Drain the aqueous layer into a second 250-mL separatory funnel, and repeat the extraction with 50 mL of *n*-hexane. Discard the aqueous layer, and combine the hexane extracts. Wash the combined extracts with 25 mL of water, allow the layers to separate, and discard the aqueous layer. Add 3 drops of glacial acetic acid, and repeat the washing procedure two more times. Filter the washed hexane layer through anhydrous sodium sulfate into a 250-mL round-bottom flask. Rinse the funnel and sodium sulfate with a few mL of *n*-hexane, and add the rinsing to the hexane solution in the flask. Place the flask in a water bath maintained at 50°, and evaporate the hexane solution with the aid of a rotary evaporator to dryness. Immediately add 25.0 mL of *Diluent*, and swirl to dissolve the residue.

Sample solution for Capsules: Weigh NLT 20 Capsules in a tared weighing bottle. Open the Capsules, without loss of shell material, and transfer the contents to a 100-mL beaker. Remove any contents adhering to the empty shells by washing with several portions of ether. Discard the washings, and dry the Capsule shells with the aid of a current of dry air. Weigh the empty Capsule shells in the tared weighing bottle, and calculate the net weight of the Capsule contents. Transfer a portion of the Capsule contents, equivalent to an amount of 8.0 mg of alpha tocopherol, to a glass-stoppered conical flask. Add 25.0 mL of water, 25.0 mL of dehydrated alcohol, and 3.5 g of potassium hydroxide pellets. Shake for 1 h in a

water bath maintained at 55°. Cool, and transfer with the aid of a minimum volume of water to a 125-mL separatory funnel. Rinse the flask with 50 mL of *n*-hexane, and add the rinsing to the separatory funnel. Insert the stopper, shake vigorously for 60 s, and allow the layers to separate. Drain the aqueous layer into a second 250-mL separatory funnel, and repeat the extraction with 50 mL of *n*-hexane. Discard the aqueous layer, and combine the hexane extracts. Wash the combined extracts with 25 mL of water, allow the layers to separate, and discard the aqueous layer. Add 3 drops of glacial acetic acid, and repeat the washing procedure two more times. Filter the washed hexane layer through anhydrous sodium sulfate into a 250-mL round-bottom flask. Rinse the funnel and sodium sulfate with a few mL of *n*-hexane, and add the rinsing to the hexane solution in the flask. Place the flask in a water bath maintained at 50°, and evaporate the hexane solution with the aid of a rotary evaporator to dryness. Immediately add 25.0 mL of *Diluent*, and swirl to dissolve the residue.

Sample solution for Oral Solution: Transfer an amount of Oral Solution equivalent to 1.5 mg of alpha tocopherol to a 125-mL conical flask fitted with a ground-glass joint, and add 25.0 mL of dehydrated alcohol. Attach a reflux condenser, and reflux in a boiling water bath for 1 min. Cautiously add 3 mL of *Potassium hydroxide solution* through the condenser, and continue to reflux for 30 min. Remove the flask from the bath, and rinse the condenser with about 15 mL of water. Cool, and transfer with a minimum volume of water to a 250-mL separatory funnel. Rinse the flask with 50 mL of *n*-hexane, and add the rinsings to the separatory funnel. Insert the stopper, shake vigorously for 1 min, and allow the layers to separate. Drain the aqueous layer into a second 250-mL separatory funnel, and repeat the extraction with 50 mL of *n*-hexane. Discard the aqueous layer, and combine the hexane extracts. Wash the combined extracts with 25 mL of water, allow the layers to separate, and discard the aqueous layer. Add 3 drops of glacial acetic acid, and repeat the washing procedure two more times. Filter the washed hexane layer through anhydrous sodium sulfate into a 250-mL round-bottom flask. Rinse the funnel and sodium sulfate with *n*-hexane, and add the rinsing to the hexane solution in the flask. Evaporate the hexane solution to dryness with the aid of a rotary evaporator over a water bath maintained at about 50°. Immediately add 5.0 mL of *Diluent*, and swirl to dissolve the residue.

Chromatographic system

(See *Chromatography* ⟨621⟩, *System Suitability*.)

Mode: LC

Detector: UV 291 nm

Column: 4.6-mm × 25-cm; packing L1

Column temperature: 40°

Flow rate: 3 mL/min

Injection volume: 20 µL

System suitability

Sample: *Standard solution*

Suitability requirements

Relative standard deviation: NMT 0.5%

Analysis

Samples: *Standard solution* and *Sample solution*

Calculate the percentage of the labeled amount of vitamin E, as alpha tocopherol, in the portion of the sample taken:

$$\text{Result} = (r_U/r_S) \times (C_S/C_U) \times 100$$

r_U = peak response of alpha tocopherol from the *Sample solution*

r_S = peak response of alpha tocopherol from the *Standard solution*

C_S = concentration of USP Alpha Tocopherol RS in the *Standard solution* (mg/mL)

C_U = nominal concentration of vitamin E, as alpha tocopherol, in the *Sample solution* (mg/mL)

[NOTE—Calculate the alpha tocopherol equivalent of alpha tocopheryl acetate, or alpha tocopheryl acid succinate by multiplying their contents by the factors 0.91 or 0.81, respectively.]

- **PROCEDURE 4**
  - This gas chromatographic procedure is provided for the determination of vitamin E as an active pharmaceutical ingredient, as a dietary supplement ingredient, or as a component in compendial dosage forms. It can be used for:
    - Vitamin E
    - Vitamin E Capsules
    - Vitamin E Preparation
  - Unless specified in the individual monographs, the *Standard solutions*, *Sample solutions*, and reagent solutions are prepared and used appropriately as follows.

Internal standard solution: 10 mg/mL of squalane in cyclohexane

System suitability solution: 0.1 mg/mL each of USP Alpha Tocopherol RS and USP Alpha Tocopheryl Acetate RS in cyclohexane

Standard solution 1: 10 mg/mL of USP Alpha Tocopherol RS in *Internal standard solution*

Standard solution 2: 10 mg/mL of USP Alpha Tocopheryl Acetate RS in *Internal standard solution*

Standard solution 3: Transfer 30.0 mg of USP Alpha Tocopheryl Acid Succinate RS into a 20-mL vial. Add 2.0 mL of methanol, 1.0 mL of 2,2-dimethoxypropane, and 0.1 mL of hydrochloric acid to the vial. Cap tightly, and sonicate. Allow to

stand in the dark for 1 h ± 5 min. Remove from the dark, uncap, and evaporate just to dryness on a steam bath with the aid of a stream of nitrogen. Add 3.0 mL of *Internal standard solution*, and mix on a vortex mixer to dissolve.

Sample solutions for Active Pharmaceutical Ingredient

Sample solution 1 (vitamin E as alpha tocopherol or alpha tocopheryl acetate): 10 mg/mL of Vitamin E (*d*- or *dl*-alpha tocopherol or *d*- or *dl*-alpha tocopheryl acetate) in *Internal standard solution*

Sample solution 2 (vitamin E as alpha tocopheryl acid succinate): Transfer 30.0 mg of Vitamin E (*d*- or *dl*-alpha tocopheryl acid succinate) into a 20-mL vial. Add 2.0 mL of methanol, 1.0 mL of 2,2-dimethoxypropane, and 0.1 mL of hydrochloric acid to the vial. Cap tightly, and sonicate. Allow to stand in the dark for 1 h ± 5 min. Remove from the dark, uncap, and evaporate just to dryness on a steam bath with the aid of a stream of nitrogen. Add 3.0 mL of *Internal standard solution*, and mix on a vortex mixer to dissolve.

Sample solutions for Vitamin E Preparation

Sample solution 1 (vitamin E as alpha tocopherol or alpha tocopheryl acetate in liquid form): Dissolve a portion of Preparation in *Internal standard solution* to prepare a Vitamin E (*d*- or *dl*-alpha tocopherol or *d*- or *dl*-alpha tocopheryl acetate) solution with nominal concentration of 10 mg/mL.

Sample solution 2 (vitamin E as alpha tocopheryl acid succinate in liquid form): Transfer a portion of Preparation, equivalent to 30.0 mg of Vitamin E (*d*- or *dl*-alpha tocopheryl acid succinate), into a 20-mL vial. Add 2.0 mL of methanol, 1.0 mL of 2,2-dimethoxypropane, and 0.1 mL of hydrochloric acid to the vial. Cap tightly, and sonicate. Allow to stand in the dark for 1 h ± 5 min. Remove from the dark, uncap, and evaporate just to dryness on a steam bath with the aid of a stream of nitrogen. Add 3.0 mL of *Internal standard solution*, and mix on a vortex mixer to dissolve.

Sample solution 3 (vitamin E as alpha tocopherol or alpha tocopheryl acetate in solid form): Transfer a portion of Preparation, equivalent to 50 mg of alpha tocopherol or alpha tocopheryl acetate, into a flask suitable for refluxing. Add 5 mL of water, and heat on a water bath at 60° for 10 min. Add 25 mL of alcohol, and reflux for 30 min. Cool, and transfer to a separator with the aid of 50 mL of water and 50 mL of ether. Shake vigorously, allow the layers to separate, and collect each layer in individual separators. Extract the aqueous layer with two 25-mL portions of ether, combining the extracts with the original ether layer. Wash the combined extract with one 25-mL portion of water, filter the ether solutions through 1 g of anhydrous sodium sulfate, and with the aid of a stream of nitrogen evaporate the ether solution on a water bath, controlled at a temperature that will not cause the ether solution to boil over. Remove the container from the water bath when 5 mL remains, and complete the evaporation without the application of heat. Dissolve the residue in *Internal standard solution* to prepare a Vitamin E (*d*- or *dl*-alpha tocopherol or *d*- or *dl*-alpha tocopheryl acetate) solution with nominal concentration of 10 mg/mL.

Sample solution 4 (vitamin E as alpha tocopheryl acid succinate in solid form): Transfer a portion of Preparation, equivalent to 30 mg of Vitamin E (*d*- or *dl*-alpha tocopheryl acid succinate), into a flask suitable for refluxing. Add 5 mL of water, and heat on a water bath at 60° for 10 min. Add 25 mL of alcohol, and reflux for 30 min. Cool, and transfer to a separator with the aid of 50 mL of water and 50 mL of ether. Shake vigorously, allow the layers to separate, and collect each layer in individual separators. Extract the aqueous layer with two 25-mL portions of ether, combining the extracts with the original ether layer. Wash the combined extract with one 25-mL portion of water, filter the ether solutions through 1 g of anhydrous sodium sulfate, and with the aid of a stream of nitrogen evaporate the ether solution on a water bath, controlled at a temperature that will not cause the ether solution to boil over. Remove the container from the water bath when 5 mL remains. Quantitatively transfer the remains into a 20-mL vial, and complete the evaporation without the application of heat. Add 2.0 mL of methanol, 1.0 mL of 2,2-dimethoxypropane, and 0.1 mL of hydrochloric acid to the vial. Cap tightly, and sonicate. Allow to stand in the dark for 1 h ± 5 min. Remove from the dark, uncap, and evaporate just to dryness on a steam bath with the aid of a stream of nitrogen. Add 3.0 mL of *Internal standard solution*, and mix on a vortex mixer to dissolve.

Sample solutions for Vitamin E Capsules

Sample solution 1 (vitamin E as alpha tocopherol or alpha tocopheryl acetate): Weigh NLT 10 Capsules in a tared weighing bottle. With a sharp knife or by other appropriate means, carefully open the Capsules, without loss of the shell material, and transfer the combined Capsule content to a 100-mL beaker. Remove any adhering substance from the emptied Capsules by washing with several small portions of *n*-hexane. Discard the washings, and allow the empty Capsules to dry in a current of dry air until the odor of *n*-hexane is no longer perceptible. Weigh the empty Capsules in the original tared weighing bottle, and calculate the average net weight per Capsule. Dissolve a portion of the combined Capsule contents in *Internal standard solution* to prepare a Vitamin E (*d*- or *dl*-alpha tocopherol or *d*- or *dl*-alpha tocopheryl acetate) solution with a nominal concentration of 10 mg/mL.

Sample solution 2 (vitamin E as alpha tocopheryl acid succinate): Weigh NLT 10 Capsules in a tared weighing bottle. With a sharp knife or by other appropriate means, carefully open the Capsules, without loss of the shell material, and transfer the combined Capsule content to a 100-mL beaker. Remove any adhering substance from the emptied Capsules by washing with several small portions of *n*-hexane. Discard the washings, and allow the empty Capsules to dry in a current of dry air until the odor of *n*-hexane is no longer perceptible. Weigh the empty Capsules in the original tared weighing bottle, and calculate the average net weight per Capsule. Transfer a portion of the combined Capsule contents, equivalent to 30.0 mg of Vitamin E (*d*- or *dl*-alpha tocopheryl acid succinate), into a 20-mL vial. Add 2.0 mL of methanol, 1.0 mL of 2,2-dimethoxypropane, and 0.1 mL of hydrochloric acid to the vial. Cap tightly, and sonicate. Allow to stand in the

dark for 1 h ± 5 min. Remove from the dark, uncap, and evaporate just to dryness on a steam bath with the aid of a stream of nitrogen. Add 3.0 mL of *Internal standard solution*, and mix on a vortex mixer to dissolve.

Chromatographic system

(See *Chromatography* ⟨621⟩, *System Suitability*.)

Mode: GC

Detector: Flame ionization

Column: 0.25-mm × 30-m fused-silica capillary, bonded with a 0.25-µm film of phase G2

Temperatures

Column: 280°

Injection port: 290°

Detector: 290°

Carrier gas: Helium

Flow rate: 1 mL/min

Split ratio: 100:1

Injection volume: 1 µL

System suitability

Samples: *System suitability solution* and appropriate *Standard solution*

Suitability requirements

Resolution: NLT 3.5 between alpha tocopherol and alpha tocopheryl acetate, *System suitability solution*

Relative standard deviation: NMT 2.0% for ratios of relevant vitamin E form to internal standard peak responses from replicate injections, appropriate *Standard solution*

Analysis

Samples: Appropriate *Standard solution* and appropriate *Sample solution*

Calculate the percentage of vitamin E in terms of alpha tocopherol, alpha tocopheryl acetate, or alpha tocopheryl acid succinate in the portion of the sample taken:

$$\text{Result} = (R_U/R_S) \times (C_S/C_U) \times 100$$

R_U = internal standard ratio (peak response of relevant vitamin E form/peak response of the internal standard) from the appropriate *Sample solution*

R_S = internal standard ratio (peak response of relevant vitamin E form/peak response of the internal standard) from the appropriate *Standard solution*

C_S = concentration of the corresponding USP Reference Standard in the appropriate *Standard solution* (mg/mL)

C_U = nominal concentration of the corresponding form of vitamin E in the appropriate *Sample solution* (mg/mL)

• **PROCEDURE 5**

- This gas chromatographic procedure is provided for the determination of Vitamin E (as *d*- or *dl*-alpha tocopherol) in:
  - Vitamin E Polyethylene Glycol Succinate (Vitamin E polyethylene glycol succinate is a mixture formed by the esterification of *d*-alpha tocopheryl acid succinate and polyethylene glycol).
- Unless specified in the individual monographs, the *Standard solutions*, *Sample solutions*, and reagent solutions are prepared as follows.

Solvent: 0.25 mL of phenolphthalein TS in 1 L of alcohol

Internal standard solution: 12 mg/mL of ethyl arachidate in isooctane

Standard solution: Transfer 32.5 mg of USP Alpha Tocopherol RS to a suitable reaction flask. Add 2 mL of pyridine and 0.5 mL of *N,O*-bis(trimethylsilyl)trifluoroacetamide with 1% trimethylchlorosilane, and heat the flask at 100° for 10 min. Cool the flask, add 5.0 mL of *Internal standard solution* followed by 20 mL of isooctane, and shake.

Sample solution: Transfer a quantity equivalent to 0.100–0.160 g of Vitamin E Polyethylene Glycol Succinate molten at 60° to a culture tube (about 20 cm long and 2.5 cm in diameter) equipped with a screw cap. Add 40–50 mg of ascorbic acid and a few boiling chips, followed by 20 mL of *Solvent*. [NOTE—Reflux the solution gently without emission of contents. Place the tube in a heating block set at 100°–150°.] When the sample is fully dissolved, add 0.25 g of potassium hydroxide, and continue to reflux for 30 min. Remove the tube from heat, and while contents are still hot, add 1–2 mL of hydrochloric acid dropwise until the pink coloration disappears. [**CAUTION**—Exothermic reaction. Allow the acid to trickle down the inside of the tube to prevent splashing.] Cool the tube, then wash the sides of the tube with 20 mL of water. Add 5.0 mL of *Internal standard solution*, cap, and shake to ensure thorough mixing. Allow the tube to stand until two distinct layers are formed. Transfer 2.5–3.5 mL of the upper layer into a suitable reaction flask, and add 2.0 mL of pyridine followed by 2.5 mL of *N,O*-bis(trimethylsilyl)trifluoroacetamide with 1% trimethylchlorosilane. Heat the flask at 100° for 10 min. Cool, and then add 12 mL of isooctane.

Chromatographic system

(See *Chromatography* ⟨621⟩, *System Suitability*.)

Mode: GC

Detector: Flame ionization

Column: 0.25-mm × 15-m fused-silica capillary, bonded with a 0.25-µm film of phase G27

Temperatures
Injection port: 280°
Detector: 345°
Column: See *Table 1*.

Table 1

Initial Temperature (°)	Temperature Ramp (°/min)	Final Temperature (°)	Hold Time at Final Temperature (min)
260	20	340	1

Carrier gas: Helium
Flow rate: 1.5 mL/min
Split ratio: 200:1
Injection volume: 1 µL

System suitability
Sample: *Standard solution*
Suitability requirements
Tailing factor: NMT 2.0 for the alpha tocopherol peak
Relative standard deviation: NMT 2.0% for the ratio of the alpha tocopherol peak response to the internal standard peak response from replicate injections

Analysis
Samples: *Standard solution* and *Sample solution*
Calculate the percentage of vitamin E as *d*-alpha tocopherol in the portion of the sample taken:

$$\text{Result} = (R_U/R_S) \times (W_S/W_U) \times 100$$

R_U = internal standard ratio (peak response of alpha tocopherol/peak response of the internal standard) from the *Sample solution*
R_S = internal standard ratio (peak response of alpha tocopherol/peak response of the internal standard) from the *Standard solution*
W_S = weight of USP Alpha Tocopherol RS used to prepare the *Standard solution* (mg)
W_U = weight of Vitamin E Polyethylene Glycol Succinate taken to prepare the *Sample solution* (mg)

ADDITIONAL REQUIREMENTS
- **USP Reference Standards 〈11〉**
USP Alpha Tocopherol RS
USP Alpha Tocopheryl Acetate RS
USP Alpha Tocopheryl Acid Succinate RS
USP Ergocalciferol RS

〈561〉 ARTICLES OF BOTANICAL ORIGIN

SAMPLING

To reduce the effect of sampling bias in qualitative and quantitative results, it is necessary to ensure that the composition of the sample used be representative of the batch of drugs being examined. The following sampling procedures are the minimum considered applicable to vegetable drugs. Some articles, or some tests, may require more rigorous procedures involving more containers being sampled or more samples per container.

Gross Sample

Where external examination of containers, markings, and labels indicates that the batch can be considered to be homogeneous, take individual samples from the number of randomly selected containers indicated below. Where the batch cannot be considered to be homogeneous, divide it into sub-batches that are as homogeneous as possible, then sample each one as a homogeneous batch. It is recommended to include samples from the first, middle, and last containers where the *No. of Containers in Batch* (*N*) is 11 or more, and each container in the batch is numbered or lettered in order.

General Chapters

No. of Containers in Batch (*N*)	No. of Containers to Be Sampled (*n*)
1–10	All
11–19	11
>19	$n = 10 + (N/10)$

(Rounding was calculated as "*n*" to next highest whole number.)

Samples are taken from the upper, middle, and lower sections of each container. If the crude material consists of component parts that are 1 cm or less in any dimension, and in the case of all powdered or ground materials, withdraw the sample by means of a sampling device that removes a core from the top to the bottom of the container, NLT two cores being taken from different angles. For materials with component parts >1 cm in any dimension, withdraw samples by hand. In the case of large bales or packs, samples should be taken from a depth of 10 cm, because the moisture content of the surface layer may be different from that of the inner layers.

Prepare the gross sample by combining and mixing the individual samples taken from each opened container, taking care not to increase the degree of fragmentation or significantly affect the moisture content.

For articles in containers holding <1 kg, mix the contents, and withdraw a quantity sufficient for the tests. For articles in containers holding between 1 and 5 kg, withdraw equal portions from the upper, middle, and lower parts of the container, each of the samples being sufficient to carry out the tests. Thoroughly mix the samples, and withdraw an amount sufficient to carry out the tests. For containers holding more than 5 kg, withdraw three samples, each weighing NLT 250 g, from the upper, middle, and lower parts of the container. Thoroughly mix the samples, and withdraw a portion sufficient to carry out the tests.

Laboratory Sample

Prepare the *Laboratory Sample* by repeated quartering of the gross sample.

NOTE—Quartering consists of placing the sample, adequately mixed, as an even and square-shaped heap and dividing it diagonally into four equal parts. The two opposite parts are then taken and carefully mixed. The process is repeated as necessary until the required quantity is obtained.

The *Laboratory Sample* should be of a size sufficient for performing all the necessary tests.

Test Sample

Unless otherwise directed in the individual monograph or test procedure below, prepare the *Test Sample* as follows.

Decrease the size of the *Laboratory Sample* by quartering, taking care that each withdrawn portion remains representative. In the case of unground or unpowdered drugs, grind the withdrawn sample so that it will pass through a No. 20 standard-mesh sieve, and mix the resulting powder well. If the material cannot be ground, reduce it to as fine a state as possible, mix by rolling it on paper or sampling cloth, spread it out in a thin layer, and withdraw the portion for analysis.

METHODS OF ANALYSIS

Foreign Organic Matter

TEST SAMPLE

Unless otherwise specified in the individual monograph, weigh the following quantities of the *Laboratory Sample*, taking care that the withdrawn portion is representative (quartering if necessary).

Roots, rhizomes, bark, and herbs	500 g
Leaves, flowers, seeds, and fruit	250 g
Cut vegetable drugs (average weight of the pieces is <0.5 g)	50 g

Spread the sample out in a thin layer, and separate the foreign organic matter by hand as completely as possible. Weigh it, and determine the percentage of foreign organic matter in the weight of drug taken.

Total Ash

Accurately weigh a quantity of the *Test Sample*, representing 2–4 g of the air-dried material, in a tared crucible and incinerate, gently at first, and gradually increase the temperature to 675 ± 25° until free from carbon, and determine the weight of the ash. If a carbon-free ash cannot be obtained in this way, extract the charred mass with hot water, collect the insoluble residue on an ashless filter paper, incinerate the residue and filter paper until the ash is white or nearly so, then add the filtrate, evaporate it to dryness, and heat the whole to a temperature of 675 ± 25°. If a carbon-free ash cannot be obtained in this way, cool the crucible, add 15 mL of alcohol, break up the ash with a glass rod, burn off the alcohol, and again heat the whole to a

temperature of 675 ± 25°. Cool in a desiccator, weigh the ash, and calculate the percentage of total ash from the weight of the drug taken.

Acid-Insoluble Ash

Boil the ash obtained as directed in *Total Ash* with 25 mL of 3 N hydrochloric acid for 5 min, collect the insoluble matter on a tared filtering crucible or ashless filter, wash with hot water, ignite, and weigh. Determine the percentage of acid-insoluble ash calculated from the weight of drug taken.

Water-Soluble Ash

Boil the ash obtained as directed in *Total Ash* with 25 mL of water for 5 min. Collect the insoluble matter in a sintered-glass crucible or on an ashless filter paper. Wash with hot water, and ignite for 15 min at a temperature not exceeding 450°. Subtract the weight of this residue, in mg, obtained in *Total Ash*, and calculate the percentage of water-soluble ash with reference to the weight of sample as determined in *Total Ash*.

Alcohol-Soluble Extractives

METHOD 1 (HOT EXTRACTION METHOD)

Transfer about 4 g of air-dried, coarsely powdered material, accurately weighed, to a glass-stoppered conical flask. Add 100 mL of alcohol, and weigh the flask. Shake, and allow to stand for 1 h. Attach a reflux condenser to the flask, boil gently for 1 h, cool, and weigh. Readjust to the original weight with alcohol. Shake, and filter rapidly through a dry filter. Transfer 25 mL of the filtrate to a tared flat-bottomed dish, and evaporate on a water bath to dryness. Dry at 105° for 6 h, cool in a desiccator for 30 min, and weigh without delay. Calculate the content, in mg/g, of alcohol-extractable matter in the test specimen.

METHOD 2 (COLD EXTRACTION METHOD)

Transfer about 4 g of air-dried, coarsely powdered material, accurately weighed, to a glass-stoppered conical flask. Add 100 mL of alcohol, insert a stopper into the flask, and macerate for 24 h, shaking frequently during the first 8 h, and then allowing to stand. Filter rapidly, taking precautions against loss of alcohol. Evaporate 25 mL of the filtrate to dryness in a tared, flat-bottomed, shallow dish, and dry at 105° to constant weight. Calculate the content, in mg/g, of alcohol-extractable matter in the test specimen.

Water-Soluble Extractives

METHOD 1 (HOT EXTRACTION METHOD)

Proceed as directed in *Method 1 (Hot Extraction Method)* in *Alcohol-Soluble Extractives*, except use water in place of alcohol.

METHOD 2 (COLD EXTRACTION METHOD)

Proceed as directed in *Method 2 (Cold Extraction Method)* in *Alcohol-Soluble Extractives*, except use water in place of alcohol.

Crude Fiber

Exhaust a weighed quantity of the *Test Sample*, representing about 2 g of the drug, with ether. Add 200 mL of boiling dilute sulfuric acid (1 in 78) to the ether-exhausted marc, in a 500-mL flask, and connect the flask to a reflux condenser. Reflux the mixture for 30 min, accurately timed, then pass through a linen or hardened-paper filter, and wash the residue on the filter with boiling water until the effluent washing is no longer acid. Rinse the residue back into the flask with 200 mL of boiling sodium hydroxide solution, adjusted to 1.25% by titration and free from sodium carbonate. Again reflux the mixture for 30 min, accurately timed, then rapidly pass through a tared filter, wash the residue with boiling water until the last washing is neutral, and dry it at 110° to constant weight. Incinerate the dried residue, ignite to constant weight, cool in a desiccator, and weigh the ash: the difference between the weight obtained by drying at 110° and that of the ash represents the weight of the crude fiber.

NOTE—The boiling with acid and alkali should continue for 30 min, accurately timed, from the time that the liquid (which is cooled below the boiling point by being added to the cold flask) again boils. After the solution has been brought to boiling, the heat should be turned low enough just to maintain boiling. During the boiling, the flask should be gently rotated from time to time to wash down any particles that may adhere to the walls of the flask. A slow current of air introduced into the flask during the boiling operation aids in preventing excessive frothing.

Starch Content

METHOD 1

The following is a general procedure for all reducing sugars and may be used to determine the starch content in botanical articles.

Malt extract: Use clean new barley malt of known efficacy, and grind just before use. Prepare malt extract just before use. For every 80 mL of malt extract needed, digest 5 g of ground malt with 100 mL of water at room temperature for 2 h. [NOTE—If an electric mixer is used, stir the mixture for 20 min.] Filter to obtain a clear extract, filtering again, if necessary, and mix the infusion well.

Test solution: Extract about 5 g of the finely ground test specimen with five 10-mL portions of ether, using a filter that will completely retain the smallest starch granule. Allow the ether to evaporate from the residue, and wash with 250 mL of aqueous alcohol solution (10 in 100). Carefully wash the residue from the paper into a 500-mL beaker with about 100 mL of water. Heat to about 60° (avoiding, if possible, gelatinizing starch), and allow to stand for about 1 h, stirring frequently to effect complete solution of sugars. Transfer to a wide-mouth bottle, rinse the beaker with a little warm water, and cool. Add an equal volume of alcohol, mix, and allow to stand for NLT 1 h.

Centrifuge until the precipitate is closely packed on the bottom of the bottle, and decant the supernatant. Wash the precipitate with successive 50-mL portions of alcohol solution (50 in 100) by centrifuging and decanting through a suitable filter until the washings are sugar free. [NOTE—To test for the presence of sugar, transfer a few drops of the washings to a test tube, and add 3 or 4 drops of a 20% solution of 1-naphthol in alcohol, prepared by dissolving 200 mg of 1-naphthol in 1 mL of alcohol and 2 mL of water. Shake the test tube well to allow uniform mixing, allow 2–4 mL of sulfuric acid to flow down the sides of the test tube, and hold the test tube upright. If sugar is present, the interface of the two liquids is colored faint to deep violet, and on shaking, the whole solution becomes blue-violet.]

Transfer the residue from the bottle and hardened filter to a beaker with about 50 mL of water. Immerse the beaker in boiling water, and stir constantly for 15 min or until all of the starch is gelatinized. Cool the beaker to 55°, add 20 mL of *Malt extract*, and hold at this temperature for 1 h. Heat again to boiling for a few min, cool to 55°, add 20 mL of *Malt extract*, and hold at this temperature for 1 h or until the residue when treated with iodine TS shows no blue tinge upon microscopic examination. Cool, dilute with water to 250 mL, and filter.

General procedure: Transfer 200 mL of the *Test solution* to a flask fitted with a reflux condenser, add 20 mL of hydrochloric acid, and heat in a boiling water bath for 2.5 h. Cool, nearly neutralize with sodium hydroxide TS, complete neutralization with sodium carbonate TS, dilute with water to 500 mL, mix, and filter. The volume of aliquot taken depends on the starch content of the specimen under test (see *Table 1*). The aliquot should contain between 100 and 200 mg of dextrose. Transfer 50 mL of the filtrate to a 400-mL alkali-resistant glass beaker, add 50 mL of alkaline cupric tartrate TS, cover the beaker with a water glass, and heat. Adjust the flame in the burner so that the contents of the flask begin to boil in 4 min, and continue boiling for exactly 2 min. Filter the hot solution at once through a sintered-glass filter. Wash the precipitate of cuprous oxide thoroughly with water at about 60°, then with 10 mL of alcohol, and finally with 10 mL of ether.

Table 1. Determination of the Optimum Aliquot

Expected Starch Content (%)	Aliquot (mL)
60	25
50	35
40	50
30	50
20	50

For solutions of reducing sugars of comparatively high purity, proceed as directed in *Method 1A* to determine the amount of reduced copper obtained by weighing the dried cuprous oxide. For solutions of reducing sugars containing large amounts of organic impurities, including sucrose, proceed as directed in *Method 1B* to determine the amount of reduced copper obtained by titration with sodium thiosulfate.

Method 1A—Dry the precipitate obtained in *General procedure* for 30 min in an oven at 110 ± 2°, cool to room temperature in a desiccator, and weigh. Refer to *Table 2* to find the quantity of dextrose, in mg, corresponding to the weight of cuprous oxide found. Determine the percentage of dextrose and then the content of starch by the following formula:

$$\text{Percentage of dextrose} = (\text{wt. of dextrose in mg} \times 0.1 \times 500)/(\text{wt. of sample in g} \times \text{aliquot in mL})$$

$$\text{Content of starch} = \%\ \text{dextrose} \times 0.9$$

General Chapters

Table 2. Calculating Dextrose (mg) (applicable when Cu_2O is weighed directly)

Cuprous Oxide (Cu_2O)	Dextrose (D-Glucose)	Cuprous Oxide (Cu_2O)	Dextrose (D-Glucose)	Cuprous Oxide (Cu_2O)	Dextrose (D-Glucose)	Cuprous Oxide (Cu_2O)	Dextrose (D-Glucose)	Cuprous Oxide (Cu_2O)	Dextrose (D-Glucose)	Cuprous Oxide (Cu_2O)	Dextrose (D-Glucose)
10	4.0	90	38.9	170	75.1	250	112.8	330	152.2	410	193.7
12	4.9	92	39.8	172	76.0	252	113.7	332	153.2	412	194.7
14	5.7	94	40.6	174	76.9	254	114.7	334	154.2	414	195.8
16	6.6	96	41.5	176	77.8	256	115.7	336	155.2	416	196.8
18	7.5	98	42.4	178	78.8	258	116.6	338	156.3	418	197.9
20	8.3	100	43.3	180	79.7	260	117.6	340	157.3	420	199.0
22	9.2	102	44.2	182	80.6	262	118.6	342	158.3	422	200.1
24	10.0	104	45.1	184	81.5	264	119.5	344	159.3	424	201.1
26	10.9	106	46.0	186	82.5	266	120.5	346	160.3	426	202.2
28	11.8	108	46.9	188	83.4	268	121.5	348	161.4	428	203.3
30	12.6	110	47.8	190	84.3	270	122.5	350	162.4	430	204.4
32	13.5	112	48.7	192	85.3	272	123.4	352	163.4	432	205.5
34	14.3	114	49.6	194	86.2	274	124.4	354	164.4	434	206.5
36	15.2	116	50.5	196	87.1	276	125.4	356	165.4	436	207.6
38	16.1	118	51.4	198	88.1	278	126.4	358	166.5	438	208.7
40	16.9	120	52.3	200	89.0	280	127.3	360	167.5	440	209.8
42	17.8	122	53.2	202	89.9	282	128.3	362	168.5	442	210.9
44	18.7	124	54.1	204	90.9	284	129.3	364	169.6	444	212.0
46	19.6	126	55.0	206	91.8	286	130.3	366	170.6	446	213.1
48	20.4	128	55.9	208	92.8	288	131.3	368	171.6	448	214.1
50	21.3	130	56.8	210	93.7	290	132.3	370	172.7	450	215.2
52	22.2	132	57.7	212	94.6	292	133.2	372	173.7	452	216.3
54	23.0	134	58.6	214	95.6	294	134.2	374	174.7	454	217.4
56	23.9	136	59.5	216	96.5	296	135.2	376	175.8	456	218.5
58	24.8	138	60.4	218	97.5	298	136.2	378	176.8	458	219.6
60	25.6	140	61.3	220	98.4	300	137.2	380	177.9	460	220.7
62	26.5	142	62.2	222	99.4	302	138.2	382	178.9	462	221.8
64	27.4	144	63.1	224	100.3	304	139.2	384	180.0	464	222.9
66	28.3	146	64.0	226	101.3	306	140.2	386	181.0	466	224.0
68	29.2	148	65.0	228	102.2	308	141.2	388	182.0	468	225.1
70	30.0	150	65.9	230	103.2	310	142.2	390	183.1	470	226.2
72	30.9	152	66.8	232	104.1	312	143.2	392	184.1	472	227.4
74	31.8	154	67.7	234	105.1	314	144.2	394	185.2	474	228.3
76	32.7	156	68.6	236	106.0	316	145.2	396	186.2	476	229.6
78	33.6	158	69.5	238	107.0	318	146.2	398	187.3	478	230.7
80	34.4	160	70.4	240	108.0	320	147.2	400	188.4	480	231.8
82	35.3	162	71.4	242	108.9	322	148.2	402	189.4	482	232.9
84	36.2	164	72.3	244	109.9	324	149.2	404	190.5	484	234.1
86	37.1	166	73.2	246	110.8	326	150.2	406	191.5	486	235.2
88	38.0	168	74.1	248	111.8	328	151.2	408	192.6	488	236.3

Method 1B

SODIUM THIOSULFATE SOLUTION: Transfer 3.9 g of sodium thiosulfate, accurately weighed, to a 100-mL volumetric flask, dissolve in and dilute with water to volume, and mix.

POTASSIUM IODIDE SOLUTION: Dissolve 42 g of potassium iodide in 100 mL of water.

SODIUM ACETATE SOLUTION: Dissolve 5.74 g of sodium acetate in 10 mL of water.

COPPER SOLUTION: Transfer about 0.3 g of pure electrolytic copper, accurately weighed, to a 250-mL flask, add 5 mL of nitric acid to dissolve the copper, add about 25 mL of water, and boil to expel red fumes. Add about 5 mL of bromine TS, and boil until the bromine is completely removed. Cool, add 10 mL of *Sodium acetate solution* followed by 10 mL of *Potassium iodide solution*, and titrate with *Sodium thiosulfate solution* to a light yellow color. Add enough starch TS to produce a marked blue color, and continue the titration. As the endpoint nears, add 2 g of potassium thiocyanate, and stir until completely dissolved. Continue titration until the precipitate is completely white. One mL of *Sodium thiosulfate solution* is equivalent to about 10 mg of copper. [NOTE—It is essential that the concentration of *Potassium iodide solution* be carefully regulated. If the solution contains less than 320 mg of copper at the completion of titration, add 4.2–5 g of potassium iodide to make a total solution of 100 mL. If greater amounts of copper are present, add *Potassium iodide solution* slowly, with constant agitation, from the buret in amounts proportionately greater.]

PROCEDURE: Wash the precipitated cuprous oxide obtained in *General procedure* with water, cover this filter with a watch glass, and dissolve the cuprous oxide with 5 mL of nitric acid directed under the watch glass with a pipette. Collect the filtrate in a 250-mL flask, wash the watch glass, and the filter with water. Collect all the washings in the flask. Boil the contents of the flask to expel red fumes. Add about 5 mL of bromine TS, and boil until the bromine is completely removed. Cool, and proceed as directed in *Copper solution* beginning with "add 10 mL of *Sodium acetate solution*". From the volume of *Sodium thiosulfate solution* consumed, obtain the weight of copper, in mg, and multiply the weight of copper by 1.1259 to obtain the weight, in mg, of cuprous oxide. From *Table 2*, find the quantity of dextrose, in mg, corresponding to the weight of cuprous oxide. The content of starch is equivalent to the weight, in mg, of dextrose obtained times 0.9. Conduct a blank determination, using 50 mL of alkaline cupric tartrate TS and 50 mL of *Malt extract.* If the weight of the cuprous oxide so obtained exceeds 0.5 mg, correct the result of the determination accordingly. [NOTE—The alkaline cupric tartrate TS deteriorates on standing, and the quantity of cuprous oxide obtained in the blank determination increases.]

General Chapters

METHOD 2

The following method is specific for dextrose (glucose), and because of its extreme sensitivity it may account for differences noted between values obtained from the same specimen. Duplicate determinations do not vary more than 2%.

Glucoamylase solution: Prepare a solution of glucoamylase in water containing 30 International Units (IU)/mL. Use glucoamylase obtained preferably from *Rhizopus delemar*. The total glucoamylase activity of the test specimen being used should be NLT 150 IU.

Acetate buffer solution: Dissolve 16.4 g of sodium acetate in 100 mL of water, add 12.0 mL of glacial acetic acid, and mix. The pH of this solution is 4.8.

Phosphate buffer: Dissolve 3.63 g of tris(hydroxymethyl) aminomethane and 5.0 g of monobasic sodium phosphate in 50.0 mL of water. At 37°, adjust with phosphoric acid to a pH of 7.0, dilute with water to 100.0 mL, and mix. [NOTE—The pH of the buffer medium is sensitive to temperature and should be adjusted to the desired pH at the temperature to be used during incubation.]

Enzyme solution: Dissolve 30 mg of glucose oxidase (Type II from *Aspergillus niger*), 3 mg of peroxidase (Type I from horseradish), and 10 mg of potassium ferrocyanide in 100 mL of *Phosphate buffer.* [NOTE—This mixture can be stored in a refrigerator for up to 10 days.]

18 N sulfuric acid: Add slowly, while stirring, 54 mL of sulfuric acid to 102 mL of water, allow to cool to 25°, and mix.

Standard solutions: Dissolve an accurately weighed quantity of USP Dextrose RS in water to obtain a solution containing 1.0 mg of USP Dextrose RS per mL. Quantitatively dilute a known volume of this solution with water to obtain *Standard solutions A, B, C, D,* and *E*, having known concentrations of 10, 20, 25, 40, and 50 µg/mL of USP Dextrose RS, respectively. [NOTE—Allow 4 h for complete mutarotation before use.]

Test solutions: Extract about 5 g of finely ground test specimen with five 25-mL portions of 80% alcohol, and filter. Remove all the alcohol from the residue by drying in an air oven at 105° for about 8 h. [NOTE 1—Any traces of alcohol remaining in the residue will inhibit glucoamylase.] Cool, and transfer the flask containing the dried test specimen to a desiccator. Transfer about 1 g, accurately weighed, of the test specimen to a previously tared flask, add 25 mL of water, and adjust with phosphoric acid to a pH of 5.0–7.0, if necessary. Boil the suspension for about 3 min, transfer the flask to an autoclave, and heat to 135° for 2 h. Remove the flask from the autoclave, maintain the temperature near 55°, and add 2.5 mL of *Acetate buffer solution* and sufficient water to adjust the total weight of the solution to 45 ± 1 g. Immerse the flask in a water bath maintained at 55 ± 1°, and add 5 mL of *Glucoamylase solution*. Continuously swirl the flask for 2 h to effect hydrolysis, pass through filter paper into a 250-mL volumetric flask, wash quantitatively with water, and collect all the washings in the flask. Dilute the contents of the flask with water to volume, and mix. Transfer 1 mL of an aliquot containing 20–60 µg of D-glucose to each of five test tubes. [NOTE 2—To obtain the range of concentration of glucose in the hydrolysate, quantitatively dilute, if necessary, with water to volume.] Add 2 mL of *Enzyme solution* to each of the five test tubes, and place the test tubes in the dark at 37 ± 1° for

exactly 30 min to develop the color. At the end of 30 min, add 2 mL of *18 N sulfuric acid* to each of the test tubes to stop the reaction, and mix.

Control solution: Transfer an accurately weighed quantity of about 0.4 g of starch to a previously tared flask, and proceed as directed in *Test solutions* beginning with "add 25 mL of water, and adjust the pH with phosphoric acid".

Procedure: Concomitantly determine the absorbances of the *Standard solutions* and the *Test solutions* at the wavelength of maximum absorbance at about 540 nm, with a suitable spectrophotometer, using the *Control solution* as the blank to set the instrument. Plot the absorbance values of the *Standard solutions* versus concentration, in µg/mL, of dextrose, and draw the straight line best fitting the five plotted points. From the graph so obtained, determine the concentration, *C*, in µg/mL, of dextrose in each of the *Test solutions*, calculate the average concentration, in µg/mL, of the solution under test. The percentage of starch content in the weight of the test specimen taken is calculated by the formula:

$$(0.9C/10^6) \times V_1 \times (250/V_0)(100/E)(100/W) = 2.25CV_1/V_0EW$$

in which E is the weight, in g, of the test specimen taken; V_0 is the volume, in mL, of the aliquot taken from the 250-mL volumetric flask; W is the percentage of dry weight of the test specimen; and V_1 is the volume, in mL, if extra dilution is done (see *Note 2* in *Test solutions*). [NOTE—V_0 is 1.0 when no extra dilution is done.]

Volatile Oil Determination

Set up a round-bottom, shortneck, 1-L flask in a heating mantle set over a magnetic stirrer. Insert an egg-shaped stirring bar magnet in the flask, and attach a cold-finger condenser and an appropriate volatile oil trap of the type illustrated (see *Figure 1*).

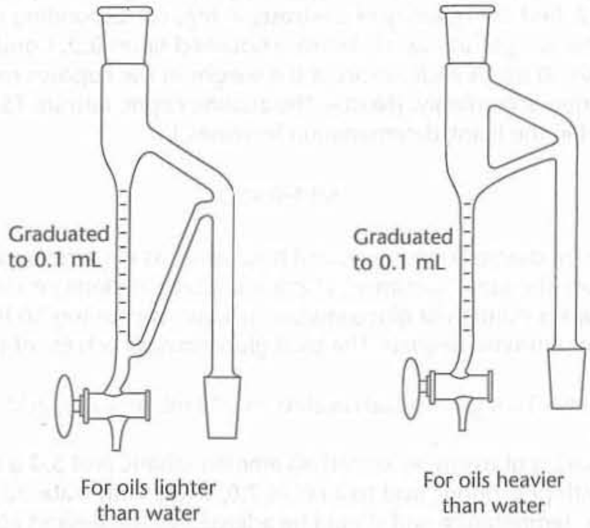

Figure 1. Traps for volatile oil apparatus.

Coarsely comminute a sufficient quantity of the drug to yield from 1 to 3 mL of volatile oil. Small seeds, fruits, or broken leaves of herbs ordinarily do not need comminution. Very fine powders are to be avoided. If this is not possible, it may be necessary to mix them with purified sawdust or purified sand. Place a suitable quantity of the drug, accurately weighed, in the flask, and fill it one-half with water. Attach the condenser and the proper separator. Boil the contents of the flask, using a suitable amount of heat to maintain gentle boiling for 2 h, or until the volatile oil has been completely separated from the drug and no longer collects in the graduated tube of the separator.

If a proper quantity of the volatile oil has been obtained in the graduated tube of the separator, it can be read to tenths of 1 mL, and the volume of volatile oil from each 100 g of drug can be calculated from the weight of the drug taken. The graduations on the separator "for oils heavier than water" are so placed that oil remains below the aqueous condensate that automatically flows back into the flask.

Water Content

For unground or unpowdered drugs, prepare about 10 g of the *Laboratory Sample* by cutting, granulating, or shredding, so that the parts are about 3 mm in thickness. Seeds or fruits smaller than 3 mm should be cracked. Avoid the use of high-speed mills in preparing the sample, and exercise care that no appreciable amount of moisture is lost during the preparation and that the portion taken is representative of the *Laboratory Sample*. Determine the water content as directed for *Procedure for Articles of Botanical Origin* in *Water Determination* ⟨921⟩, *Method III (Gravimetric)*.

TEST FOR AFLATOXINS

CAUTION—*Aflatoxins are highly dangerous, and extreme care should be exercised in handling aflatoxin materials.*

Where the individual monograph calls for compliance with the limits for aflatoxins, the limits are NMT 5 ppb for aflatoxin B_1 (AFB_1) and NMT 20 ppb for the sum of aflatoxins B_1 (AFB_1), B_2 (AFB_2), G_1 (AFG_1), and G_2 (AFG_2). The extent of testing may be determined using a risk-based approach that considers the likelihood of contamination. The presence of unexpected contamination with aflatoxins is to be considered in determining compliance. The following analytical procedures are provided for determining compliance. Unless otherwise specified in the individual monograph, use *Method I*. If system suitability fails, use either *Method II* or *Method III*.

Method I

This TLC test is provided to detect the possible presence of AFB_1, AFB_2, AFG_1, and AFG_2 in any material of plant origin.

ZINC ACETATE–ALUMINUM CHLORIDE REAGENT

Dissolve 20 g of zinc acetate and 5 g of aluminum chloride in sufficient water to make 100 mL.

SODIUM CHLORIDE SOLUTION

Dissolve 5 g of sodium chloride in 50 mL of water.

TEST SOLUTION 1

Grind about 200 g of plant material to a fine powder. Transfer about 50 g of the powdered material, accurately weighed, to a glass-stoppered flask. Add 200 mL of a mixture of methanol and water (17:3). Shake vigorously by mechanical means for NLT 30 min, and filter. [NOTE—If the solution has interfering plant pigments, proceed as directed for *Test Solution 2*.] Discard the first 50 mL of the filtrate, and collect the next 40-mL portion. Transfer the filtrate to a separatory funnel. Add 40 mL of *Sodium Chloride Solution* and 25 mL of solvent hexane, and shake for 1 min. Allow the layers to separate, and transfer the lower aqueous layer to a second separatory funnel. Extract the aqueous layer in the separatory funnel twice, each time with 25 mL of methylene chloride, by shaking for 1 min. Allow the layers to separate each time, separate the lower organic layer, and collect the combined organic layers in a 125-mL conical flask. Evaporate the organic solvent on a water bath. Transfer the remaining extract to an appropriate sample tube, and evaporate to dryness on a water bath. Cool the residue. If interferences exist in the residue, proceed as directed for *Cleanup procedure* in *Test Solution 2*. Otherwise, dissolve the residue obtained above in 0.2 mL of a mixture of chloroform and acetonitrile (9.8: 0.2), and shake by mechanical means if necessary.

TEST SOLUTION 2

Collect 100 mL of the filtrate from the start of the flow, and transfer to a 250-mL beaker. Add 20 mL of *Zinc Acetate–Aluminum Chloride Reagent* and 80 mL of water. Stir, and allow to stand for 5 min. Add 5 g of a suitable filtering aid, such as diatomaceous earth, mix, and filter. Discard the first 50 mL of the filtrate, and collect the next 80-mL portion. Proceed as directed for *Test Solution 1*, beginning with "Transfer the filtrate to a separatory funnel".

Cleanup procedure: Place a medium-porosity sintered-glass disk or a glass wool plug at the bottom of a 10-mm × 300-mm chromatographic tube. Prepare a slurry of 2 g of silica gel with a mixture of ethyl ether and solvent hexane (3:1), pour the slurry into the column, and wash with 5 mL of the same solvent mixture. Allow the absorbent to settle, and add to the top of the column a layer of 1.5 g of anhydrous sodium sulfate. Dissolve the residue obtained above in 3 mL of methylene chloride, and transfer it to the column. Rinse the flask twice with 1-mL portions of methylene chloride, transfer the rinses to the column, and elute at a rate NMT 1 mL/min. Add successively to the column 3 mL of solvent hexane, 3 mL of ethyl ether, and 3 mL of methylene chloride; elute at a rate NMT 3 mL/min; and discard the eluates. Add to the column 6 mL of a mixture of methylene chloride and acetone (9:1), and elute at a rate NMT 1 mL/min, preferably without the aid of vacuum. Collect this eluate in a small vial, add a boiling chip if necessary, and evaporate to dryness on a water bath. Dissolve the residue in 0.2 mL of a mixture of chloroform and acetonitrile (9.8: 0.2), and shake by mechanical means if necessary.

TEST SOLUTION 3

If interferences still exist in the residue, proceed as directed for *Cleanup procedure with IAC* in *Test Solution* in *Method II*.

AFLATOXIN SOLUTION

CAUTION—*Aflatoxins are highly toxic. Handle with care.*

Dilute the USP Aflatoxins RS 1:5 with acetonitrile to obtain a solution having a concentration of 0.4 µg/mL each of AFB_1 and AFG_1, and 0.1 µg/mL each of AFB_2 and AFG_2.

PROCEDURE

Separately apply 2.5, 5, 7.5, and 10 µL of the *Aflatoxin Solution* and three 10-µL applications of either *Test Solution 1*, *Test Solution 2*, or *Test Solution 3* to a suitable thin-layer chromatographic plate (see *Chromatography* ⟨621⟩) coated with a 0.25-mm layer of chromatographic silica gel mixture. Superimpose 5 µL of the *Aflatoxin Solution* on one of the three 10-µL applications of the *Test Solution.* Allow the spots to dry, and develop the chromatogram in an unsaturated chamber containing a solvent system consisting of a mixture of chloroform, acetone, and isopropyl alcohol (85:10:5) until the solvent front has moved NLT 15 cm from the origin. Remove the plate from the developing chamber, mark the solvent front, and allow the plate to air-dry. Locate the spots on the plate by examination under UV light at 365 nm.

SYSTEM SUITABILITY

The four applications of the *Aflatoxin Solution* appear as four clearly separated blue fluorescent spots. Observe any spot obtained from the *Test Solution* that coincides in hue and position with those of the *Aflatoxin Solution.* Any spot obtained from the *Test Solution* with the superimposed *Aflatoxin Solution* is not less intense than that of the corresponding *Aflatoxin Solution.*

ACCEPTANCE CRITERIA

No spot from any of the other applications of the *Test Solution* corresponds to any of the spots obtained from the applications of the *Aflatoxin Solution.* If any spot of aflatoxins is obtained in the *Test Solution,* match the position of each fluorescent spot of the *Test Solution* with those of the *Aflatoxin Solution* to identify the type of aflatoxin present. The intensity of the aflatoxin spot, if present in the *Test Solution,* when compared with that of the corresponding aflatoxin in the *Aflatoxin Solution* will give an approximate concentration of aflatoxin in the *Test Solution.* Where the individual monograph calls for compliance with the limits for aflatoxins, the limits are NMT 5 ppb for AFB_1 and NMT 20 ppb for the sum of AFB_1, AFB_2, AFG_1, and AFG_2, except when otherwise indicated.

Method II

SODIUM CHLORIDE SOLUTION

See *Method I.*

PHOSPHATE BUFFERED SALINE SOLUTION

Prepare 10 mM phosphate buffer solution containing 0.138 M sodium chloride and 0.0027 M potassium chloride in water, and adjust with 2 M sodium hydroxide to a pH of 7.4.[1]

IMMUNOAFFINITY COLUMN (IAC)

Before conditioning, adjust the IAC to room temperature. For conditioning, apply 10 mL of *Phosphate Buffered Saline Solution* onto the column and let it flow through the column by gravity force at a rate of 2–3 mL/min. Leave 0.5 mL of the *Phosphate Buffered Saline Solution* on top of the column until the *Test Solution* is applied.

TEST SOLUTION

Sample extraction: Transfer about 5 g of a representative powdered sample, accurately weighed, to a glass-stoppered flask. Add 20 mL of a mixture of methanol and water (17:3). Shake vigorously by mechanical means for NLT 30 min, and filter. Discard the first 5 mL of the filtrate, and collect the next 4-mL portion. Transfer the filtrate to a separatory funnel. Add 4 mL of *Sodium Chloride Solution* and 2.5 mL of hexane, and shake for 1 min. Allow the layers to separate, and transfer the lower aqueous layer to a second separatory funnel. Extract the aqueous layer in the separatory funnel twice, each time with 2.5 mL of methylene chloride, by shaking for 1 min. Allow the layers to separate each time, separate the lower organic layer, and collect the combined organic layers in a 50-mL conical flask. Evaporate the organic solvent on a water bath. Transfer the remaining extract to an appropriate sample tube, and evaporate to dryness on a water bath. Cool the residue. If interferences exist in the residue, proceed as directed for *Cleanup procedure with IAC.* Otherwise, dissolve the residue obtained above in 200 µL of acetonitrile, and shake by mechanical means if necessary.

---

[1] A suitable powder mixture is available from Sigma as PBS P-3813.

Cleanup procedure with IAC: The residue is dissolved in 5 mL of a mixture of methanol and water (60:40) and then diluted with 5 mL of water. This extract is applied onto a conditioned IAC. The IAC is rinsed twice with 10 mL of *Phosphate Buffered Saline Solution*, and the elution is performed slowly with 2 mL of methanol. Evaporate the eluate with nitrogen, and dissolve the residue in 200 µL of acetonitrile.

AFLATOXIN SOLUTION

CAUTION—*Aflatoxins are highly toxic. Handle with care.*

Dilute quantitatively the USP Aflatoxins RS 1:50 with acetonitrile to obtain a solution containing 0.04 µg/mL each of AFB_1 and AFG_1, and 0.01 µg/mL each of AFB_2 and AFG_2.

ANALYSIS

Separately apply 5, 7.5, and 10 µL of *Aflatoxin Solution* and three 10-µL applications of the *Test Solution* to a suitable HPTLC plate (see *Chromatography* ⟨621⟩) coated with a 200-µm layer of chromatographic silica gel mixture. Superimpose 5 µL of *Aflatoxin Solution* on one of the three 10-µL applications of the *Test Solution*. Allow the spots to dry, and develop the chromatogram in a saturated chamber containing a solvent system consisting of a mixture of chloroform, acetone, and water (140: 20: 0.3) until the solvent front has moved NLT 72 mm from the origin (80 mm from the lower edge of the plate). Remove the plate from the developing chamber, mark the solvent front, and allow the plate to air-dry for 5 min. Locate the spots on the plate by scanning fluorescence density (>400 nm) under UV light at 366 nm. Match the position of each fluorescent spot of the *Test Solution* with those of *Aflatoxin Solution* to identify the type of aflatoxin present. The concentration of aflatoxins in the *Test Solution* can be calculated from the calibration curve obtained from the scan data with *Aflatoxin Solution*.

SYSTEM SUITABILITY

The four applications of *Aflatoxin Solution* appear as four clearly separated blue fluorescent spots. Observe any spot obtained from the *Test Solution* that coincides in hue and position with those of *Aflatoxin Solution*. Any spot obtained from the *Test Solution* with the superimposed *Aflatoxin Solution* is not less intense than that of the corresponding *Aflatoxin Solution*. The mean recovery of spiked AFB_1 and AFG_1 is NLT 70%.

ACCEPTANCE CRITERIA

Where the individual monograph calls for compliance with the limits for aflatoxins, the limits are NMT 5 ppb for AFB_1 and NMT 20 ppb for the sum of AFB_1, AFB_2, AFG_1, and AFG_2, except when otherwise indicated.

Method III

This test method is provided as an example for the detection of the possible presence of AFB_1 and total aflatoxins (AF: sum of AFB_1, AFB_2, AFG_1, and AFG_2). It has been shown to be suitable for powdered ginseng and ginger. Its suitability to other articles of botanical origin must be demonstrated.

0.1 M PHOSPHATE BUFFER SOLUTION

Dissolve 8.69 g of anhydrous disodium phosphate and 4.66 g of anhydrous monosodium phosphate or 5.36 g of monosodium phosphate monohydrate in 800 mL water, adjust with 2 M sodium hydroxide to a pH of 7.4, add 10 mL of polysorbate 20, and dilute to 1 L.

PHOSPHATE BUFFERED SALINE SOLUTION

Prepare as directed in *Method II*.

WORKING AFLATOXIN STANDARD SOLUTIONS

Prepare six solutions in separate 10-mL volumetric flasks according to *Table 3*. Dilute with methanol and water (1:1, v/v) to volume. Store in a refrigerator, and equilibrate to room temperature before use. Prepare the solutions daily.

General Chapters

Table 3. Preparation of Working Aflatoxin Standard Solutions

Working Aflatoxin Standard Solutions	USP Aflatoxins RS (µL)	Final Aflatoxin Concentration of Working Aflatoxin Standard Solution (ng/mL)				
		AFB_1	AFB_2	AFG_1	AFG_2	ΣAF
1	0	0	0	0	0	0
2	12.5	0.25	0.0625	0.25	0.0625	0.625
3	25	0.5	0.125	0.5	0.125	1.25
4	50	1	0.25	1	0.25	2.5
5	100	2	0.5	2	0.5	5
6	200	4	1	4	1	10

IMMUNOAFFINITY COLUMN (IAC)[2]

Use an immunoaffinity column that contains monoclonal antibodies cross reactive toward AFB_1, AFB_2, AFG_1, and AFG_2. The immunoaffinity columns have a minimum capacity of NLT 100 ng of total aflatoxin and give a recovery of NLT 80% for AFB_1, AFB_2, AFG_1, and AFG_2 when 5 ng of each AFB_1, AFB_2, AFG_1, and AFG_2 is applied in 10 mL of 10% methanol in *Phosphate Buffered Saline Solution* (v/v).

General Chapters

TEST SOLUTION

Extraction: Weigh 5 g of a representative test sample in a 50-mL centrifuge tube. Add 1 g of sodium chloride and 25 mL of a mixture of methanol and 0.5% sodium bicarbonate (700:300). Mix on a vortex mixer until sample particles and extract solvent are well mixed. Shake at 400 rpm for 10 min. Centrifuge for 10 min at 7000 rpm (*g* value = 5323 mm/s²) or at a speed that can result in a firm pellet of residues. Immediately pipette 7 mL into a 50-mL centrifuge tube, add 28 mL of *0.1 M Phosphate Buffer Solution*, mix, and filter through glass microfiber paper. Collect 25 mL of filtrate (equivalent to 1 g of test sample) into a 25-mL graduated cylinder, and proceed immediately with IAC chromatography.

IAC cleanup: [NOTE—For IAC cleanup, columns must be kept at room temperature for at least 15 min before use.] Remove the top cap from the column, and connect it with the reservoir. Remove the end cap from the column, and attach it to the column manifold (the fit must be tight). Let the liquid in the column pass through until the liquid is about 2–3 mm above the column bed. Pass 25 mL of filtrate into the reservoir. Let the filtrate flow through the column by gravity force. Let the column run dry. To start the flow again easily, remove the column from the manifold, add about 2 mL of *Phosphate Buffered Saline Solution* into the column, reattach the column to the reservoir, and wash the column with an additional 3 mL of *Phosphate Buffered Saline Solution* and then with 5 mL of water (the 5 mL of *Phosphate Buffered Saline Solution* can be added directly to the column reservoir if other techniques are used to dislodge the air bubble at the end of the column and to start flow again easily). Let the column run dry, then force 3 mL of air through the column with a syringe. Elute with 1 mL of methanol, and collect the analytes in a 3-mL volumetric flask, letting the eluate drip freely. Let the column run dry. Let stand for 1 min, then elute with an additional 1 mL of methanol, and collect in the same volumetric flask. Let the column run dry, and force 10 mL of air through the column. Dilute the eluate with water to volume. Use this as the *Test Solution*, and perform the analysis of aflatoxins immediately.

SYSTEM SUITABILITY SOLUTION

Prepare a spiked sample by adding 5 mL of *Working Aflatoxin Standard Solution 5* to a 5-g sample and repeating the procedure for the *Test Solution*, using 20 mL instead of 25 mL of the mixture of methanol and 0.5% sodium bicarbonate (700:300).

CHROMATOGRAPHIC SYSTEM

Flow rate: 0.8 mL/min
Detection: Fluorescence detector set at excitation wavelength (Ex) 362 nm and emission wavelength (Em) 440 nm
Column: 4.6-mm × 15-cm containing 3-µm packing L1
Mobile phase: Isocratic
For post-column derivatization with PHRED cell[3]—Water, methanol, and acetonitrile (600:250:150)
For post-column derivatization with Kobra cell[4]—A solution prepared by mixing 1 L of a mixture of water, methanol, and acetonitrile (600:250:150); 350 µL of 4 M nitric acid; and 120 mg of potassium bromide

[2] AflaOchraTest column (G1017; Vicam, Watertown, MA, USA) or equivalent. Aflatoxin/OTA immunoaffinity columns are suitable.
[3] PHRED™ Photochemical Reactor (AURA Industries, New York, NY, USA) or equivalent. Avoid looking at the UV lamp.
[4] Kobra Cell™ (R-Biopharm Inc., Marshall, MI, USA) or equivalent. Set at 100 mA. Do not turn on the current until the LC pump is operating to avoid overheating the cell membrane.

Post-column derivatization (PCD) systems
PHRED cell—Post-column photochemical derivatization cell
Kobra cell—Electrochemical cell, post-column bromination derivatization cell

ANALYSIS

Post-column derivatization for aflatoxins: Use a UV or Kobra cell. Inject 50 µL of reagent blank *(Working Aflatoxin Standard Solution 1), Working Aflatoxin Standard Solutions 2–6,* or the *Test Solution* into the LC column. Identify the aflatoxin peaks in the *Test Solution* by comparing the retention times with those of the working standards. The aflatoxins elute in the order AFG_2, AFG_1, AFB_2, and AFB_1. After passing through the PHRED or Kobra cell, the AFG_1 and AFB_1 have been derivatized to form AFG_{2a} (derivative of AFG_1) and AFB_{2a} (derivative of AFB_1). [NOTE—The chemical structures of the derivatives resulting from electrochemical bromination and photolysis are not the same. The structures of AFB_1 and AFG_1 photolysis products have not been established.] The retention times of AFG_2, AFG_{2a}, AFB_2, and AFB_{2a} are between about 14 and 27 min using the PHRED cell; retention times are shorter using the Kobra cell. The peaks should be baseline resolved. Construct standard curves for each aflatoxin. Determine the concentration of each aflatoxin in the *Test Solution* from the calibration curve.

Aflatoxins calibration curves: Calibration curves are prepared for each of the aflatoxins using the *Working Aflatoxin Standard Solutions* containing the four aflatoxins described. These solutions cover the range of 0.25–4 ng/mL for AFB_1 and AFG_1, and the range of 0.0625–1 ng/mL for AFB_2 and AFG_2. Make the calibration curves before analysis according to *Table 3*, and check the plot for linearity. If the test portion area response is outside (higher) the calibration range, then the *Test Solution* should be diluted with a mixture of methanol and water (1:1, v/v) and reinjected into the LC column.

Quantitation of aflatoxins: Quantitation of aflatoxins is performed by measuring peak areas at each aflatoxin retention time and comparing them with the corresponding calibration curve.

SYSTEM SUITABILITY

The mean recovery of spiked AFB_1 (2 µg/kg) and the total of aflatoxins (5 µg/kg) is NLT 68% and 70%, respectively. The relative standard deviation (RSD) is NMT 10% for AFB_1 and for the total of aflatoxins.

CALCULATIONS

Plot the peak area (response, *y*-axis) of each of the toxin standards against the concentration (ng/mL, *x*-axis) and determine the slope (*S*) and *y*-intercept (*a*). Calculate the level of toxin in the sample by the following formula:

$$\text{Toxin } (\mu g/kg) = \{[(R - a)/S] \times V/W\} \times F$$

where *R* is the *Test Solution* peak area; *V* is the final volume of the injected *Test Solution* (mL); and *F* is the dilution factor. $F = 1$ when $V = 3$ mL. *W* is 1 g of test sample passed through the immunoaffinity column. The total of aflatoxins is the sum of AFG_2, AFG_1, AFB_2, and AFB_1.

ACCEPTANCE CRITERIA

Where the individual monograph calls for compliance with the limits for aflatoxins, the limits are NMT 5 ppb for AFB_1 and NMT 20 ppb for the sum of AFB_1, AFB_2, AFG_1, and AFG_2, except when otherwise indicated.

PESTICIDE RESIDUE ANALYSIS

Definition

Where used in this Pharmacopeia, the designation "pesticide" applies to any substance or mixture of substances intended to prevent, destroy, or control any pest, unwanted species of plants, fungus, or animals causing harm during or otherwise interfering with the production, processing, storage, transport, or marketing of pure articles. The designation includes substances intended for use as growth regulators, defoliants, or desiccants, and any substance applied to crops before or after harvest to protect the product from deterioration during storage and transport.

Limits

Within the United States, many botanicals are treated as dietary supplements and are subject to the statutory provisions that govern foods but not drugs in the Federal Food, Drug, and Cosmetic Act. Limits for pesticides in foods are determined by the Environmental Protection Agency (EPA) as indicated in the Code of Federal Regulations (40 CFR Part 180) or the Federal Register (FR). In addition, the Food and Drug Administration (FDA) establishes action levels for unavoidable pesticide residues (21 CFR Part 109 and 21 CFR Part 509). For pesticide chemicals without EPA-established tolerance levels or FDA action levels, the

residues should be below the detection limit of the specified method. Results less than the EPA detection limits are considered zero values. The limits contained herein, therefore, are not applicable in the United States when articles of botanical origin are labeled for food purposes. The limits, however, may be applicable in other countries. Unless otherwise indicated in the monograph, the article to be examined complies with the limits given in *Table 4*. The limits for suspected pesticides that are not listed in *Table 4* must comply with the regulations of the EPA. For instances in which a pesticide is not listed in *Table 4* or in EPA regulations, calculate the limit by the formula:

$$\text{Limit (mg/kg)} = AM/100B$$

where *A* is the acceptable daily intake (ADI), as published by FAO-WHO, in mg/kg of body weight; *M* is body weight, in kg (60 kg); and *B* is the daily dose of the article, in kg.

If the article is intended for the preparation of extracts, tinctures, or other pharmaceutical forms of which the preparation method modifies the content of pesticides in the finished product, calculate the limits by the formula:

$$\text{Limit (mg/kg)} = AME/100B$$

where *E* is the extraction factor of pesticide in the preparation method, determined experimentally as the ratio between the original pesticide content in the plant material and the final pesticide content in the preparation; *B* is the daily dose of the preparation in kg; and *A*and *M* are as defined above.

A total or partial exemption from the test may be granted when the complete history (nature and quantity of the pesticides used, date of each treatment during cultivation and after harvest) of the treatment of the batch is known and can be checked precisely according to good agricultural and collection practice (GACP).

Table 4

Substance	Limit (mg/kg)
Acephate	0.1
Alachlor	0.05
Aldrin and dieldrin (sum of)	0.05
Azinphos-ethyl	0.1
Azinphos-methyl	1
Bromide, inorganic (calculated as bromide ion)	125
Bromophos-ethyl	0.05
Bromophos-methyl	0.05
Bromopropylate	3
Chlordane (sum of *cis*-, *trans*-, and oxychlordane)	0.05
Chlorfenvinphos	0.5
Chlorpyriphos-ethyl	0.2
Chlorpyriphos-methyl	0.1
Chlorthal-dimethyl	0.01
Cyfluthrin (sum of)	0.1
λ-Cyhalothrin	1
Cypermethrin and isomers (sum of)	1
DDT (sum of *o,p*′-DDE, *p,p*′-DDE, *o,p*′-DDT, *p,p*′-DDT, *o,p*′-TDE, and *p,p*′-TDE)	1
Deltamethrin	0.5
Diazinon	0.5
Dichlofluanid	0.1
Dichlorvos	1
Dicofol	0.5
Dimethoate and omethoate (sum of)	0.1
Dithiocarbamates (expressed as CS_2)	2
Endosulfan (sum of isomers and endosulfan sulphate)	3
Endrin	0.05
Ethion	2
Etrimphos	0.05
Fenchlorophos (sum of fenchlorophos and fenchlorophos-oxon)	0.1
Fenitrothion	0.5
Fenpropathrin	0.03
Fensulfothion (sum of fensulfothion, fensulfothion-oxon, fensulfothion-oxon sulfone, and fensulfothion sulfone)	0.05

Table 4 *(Continued)*

Substance	Limit (mg/kg)
Fenthion (sum of fenthion, fenthion-oxon, fenthion-oxon sulfone, fenthion-oxon sulfoxide, fenthion sulfone, and fenthion-sulfoxide)	0.05
Fenvalerate	1.5
Flucythrinate	0.05
τ-Fluvalinate	0.05
Fonophos	0.05
Heptachlor (sum of heptachlor, *cis*-heptachlorepoxide, and *trans*-heptachlorepoxide)	0.05
Hexachlorbenzene	0.1
Hexachlorocyclohexane (sum of isomers α-, β -, δ-, and ε-)	0.3
Lindan (γ-hexachlorocyclohexane)	0.6
Malathion and malaoxon (sum of)	1
Mecarbam	0.05
Methacriphos	0.05
Methamidophos	0.05
Methidathion	0.2
Methoxychlor	0.05
Mirex	0.01
Monocrotophos	0.1
Parathion-ethyl and paraoxon-ethyl (sum of)	0.5
Parathion-methyl and paraoxon-methyl (sum of)	0.2
Pendimethalin	0.1
Pentachloranisole	0.01
Permethrin and isomers (sum of)	1
Phosalone	0.1
Phosmet	0.05
Piperonyl butoxide	3
Pirimiphos-ethyl	0.05
Pirimiphos-methyl (sum of pirimiphos-methyl and *N*-desethyl-pirimiphos-methyl)	4
Procymidone	0.1
Profenophos	0.1
Prothiophos	0.05
Pyrethrum (sum of cinerin I, cinerin II, jasmolin I, jasmolin II, pyrethrin I, and pyrethrin II)	3
Quinalphos	0.05
Quintozene (sum of quintozene, pentachloraniline, and methyl pentachlorphenyl sulfide)	1
S-421	0.02
Tecnazene	0.05
Tetradifon	0.3
Vinclozolin	0.4

Qualitative and quantitative analysis of pesticide residues: Use analytical procedures validated e.g. in accordance with the latest version of the EU guideline on analytical quality control and validation procedures for pesticide residue analysis [NOTE—Current version Document No. SANCO/12571/2013, http://ec.europa.eu/food/plant/resources/qualcontrol_en.pdf] or the EPA method validation principles (OPPTS 860.1340) that satisfy the following criteria. The method, especially with respect to its purification steps, is suitable for the combination of pesticide residue and substance under test, and is not susceptible to interference from co-extractives; the limit of quantification for each pesticide matrix combination to be analyzed is NMT the corresponding tolerance limit: the method is shown to recover between 70% and 120% of each pesticide with a repeatability NLT 20% RSD [NOTE—lower recoveries may be acceptable in certain cases as discussed in SANCO/12571/2013]; and the concentrations of test and reference solutions and the setting of the apparatus are such that a linear response is obtained from the analytical detector.

General Chapters

LIMITS OF ELEMENTAL IMPURITIES

The levels of elemental impurities should be restricted as shown in *Table 5* unless otherwise stated in the individual monograph. Specific monographs may provide different limits for articles that are typically used in large quantities.

Table 5. Limits of Elemental Impurities

Element	Limits (μg/g)
Arsenic (inorganic)[a]	2
Cadmium	0.5
Lead	5
Mercury (total)	1
Methylmercury (as Hg)[b]	0.2

[a] Arsenic may be measured using a nonspeciation procedure under the assumption that all arsenic contained in the supplement is in the inorganic form. Where the limit is exceeded using a nonspeciation procedure, compliance with the limit for inorganic arsenic shall be demonstrated on the basis of a speciation procedure.

[b] Methylmercury determination is not necessary when the content for total mercury is less than the limit for methylmercury.

Articles are tested according to the procedures set forth in *Elemental Impurities—Procedures* ⟨233⟩. Where speciation is required, the procedures given in *Elemental Contaminants in Dietary Supplements* ⟨2232⟩ are used for testing.

⟨563⟩ IDENTIFICATION OF ARTICLES OF BOTANICAL ORIGIN

INTRODUCTION

Identification of raw plant material intended for use in the manufacture of pharmaceuticals, excipients, or dietary supplements is carried out by examining the morphological and histological features of the article under test and by performing diagnostic chemical tests on the article. The botanical and chemical characteristics of the test article are then compared to the known botanical and chemical characteristics of the plant species. Reference articles may be specified to assist in the proper botanical and chemical identification of the plant and plant part. A reference article may be either a USP Authenticated Reference Material, which may be used for both botanical and chemical identification, or a USP Reference Standard, which is used for chemical identification only.

USP AUTHENTICATED REFERENCE MATERIALS

USP Authenticated Reference Materials are plant organs or tissues certified to have come from a plant that has been properly identified as belonging to the species listed on the label. The authentication is performed by botanical taxonomists, plant anatomists, phytochemists, or other plant scientists contracted by USP. A USP Authenticated Reference Material is typically a dried, pulverized plant organ or tissue, and it may be obtained from USP. Herbarium samples that may include roots, stems, leaves, flowers, fruits, and seeds of the authenticated plants are archived and made available for examination upon request. Standard herbarium samples usually consist of the entire mature plant. USP Authenticated Reference Materials undergo the same botanical and chemical diagnostic tests as those applied to test raw materials. A test article must have all botanical and chemical characteristics specified and found in the USP Authenticated Reference Material. To serve its intended purpose, each USP Authenticated Reference Material is properly stored, handled, and used. Generally, USP Authenticated Reference Materials are stored in their original containers under cool and dry conditions and protected from light and insect infestation. Where special storage conditions are necessary, directions are given on the label. Active principles and marker compounds typically degrade with time; therefore, expiration dates are assigned to USP Authenticated Reference Materials for their use in chemical identification. USP Authenticated Reference Materials are not intended for use in the manufacture of pharmaceuticals, excipients, or dietary supplements.

BOTANICAL IDENTIFICATION

The botanical identification of raw plant materials used in the manufacture of pharmaceuticals, excipients, or dietary supplements consists of ascertaining the macroscopic characteristics of the plant part, such as root, stem, leaf, flower, fruit, or seed, used in the manufacture of the article, as well as ascertaining its histological (microscopic) features. It may also include the inspection of organoleptic features of the botanical tissue such as the presence or absence of a characteristic odor. Individual compendial monographs may include botanical information on possible adulterant species to help ensure their absence in the

raw material. For a proper identification of the plant, plant organ, or plant tissue, it is necessary to have a basic knowledge of plant anatomy.

Diagnostic Plant Morphology and Anatomy

This section exclusively addresses the diagnostic morphological and anatomical features of vascular plants and the various plant parts, such as roots, stems, leaves, flowers, fruits, and seeds, from which pharmaceuticals, excipients, or dietary supplements are derived. Vascular plants include pteridophytes (ferns and fern allies; for example, genera *Aspidium*, *Equisetum*, and *Lycopodium*), gymnosperms (seed plants, in which the seed is not enclosed within a fruit; for example, genera *Ephedra*, *Gingko*, and *Pinus*), and angiosperms (seed plants, in which the seed is enclosed within a fruit; for example, genera *Allium*, *Digitalis*, *Panax*, *Matricaria*, and *Rauwolfia*). Anatomical diagnostic features that are specified in an individual monograph (see *Botanic characteristics* in individual monographs) may include, but are not limited to, the presence of a particular tissue within an organ; the arrangement and type of cells within a tissue; the presence and type of secretory canal, oil, or resin duct or laticifers within an organ; the number of epithelial cells surrounding a secretory canal; and the presence and type of ergastic substances such as starch, inulin, fat globules, essential oils, calcium oxalate crystals, cystoliths, polyphenols, fluids, or other materials occurring in the cytoplasm, organelles, vacuoles, cavities, or cell wall.

ROOTS

The tissues present in young roots, starting with the most external tissue, include an epidermis with root hairs, cortex, endodermis, pericycle, phloem, xylem, and, in some species, pith. In some species, the outermost layer or layers of cortex are distinct from the inner layers, in which case they are referred to as a hypodermis. In species that undergo secondary growth in the roots, it is typical for all tissues external to the pericycle to be sloughed off. Roots that exhibit secondary growth have a periderm or bark, composed of a phellum (cork), phellogen (cork cambium), and phelloderm as the outermost tissue. Underneath the periderm, remnants of primary phloem, secondary phloem, vascular cambium, primary xylem, and secondary xylem can be found. Secondary vascular tissues have medullary rays separating clusters of the principal conducting cells of phloem (sieve elements or sieve cells) and the principal conducting cells of xylem (vessels and tracheids). Most species of plants that undergo secondary growth lack pith in the root. The type and arrangement of the principal conducting cells of the vascular tissues may be diagnostic of the species. Roots of many species develop into food storage organs. Abundant parenchyma and large amounts of starch or other polysaccharides characterize these types of roots. The presence, type, and arrangement of fibers, sclereids, and other tissues, and the presence and location of ergastic material, may also be diagnostic features. Morphologically, roots may be distinguished from rhizomes (the underground stems) primarily by the absence of nodes and internodes, which are present in rhizomes.

STEMS

Several external macroscopic features of stems that may be diagnostic of the species include the attributes of the nodes, internodes, leaf scars, vascular bundle scars, lenticles, and buds; the growth pattern of the buds; position and arrangement of the leaves along the stem; and the presence of tendrils, spines, thorns, or prickles. Starting with the outermost tissue, the internal arrangement of tissues in the young stems of most species is epidermis, cortex, a concentric ring of vascular bundles separated from each other by parenchymatous medullary rays, and pith. Depending on the species, stomata or trichomes or both structures may be present in the epidermis. The cortex of some species may include a hypodermis or an endodermis or both. In most monocotyledons, the vascular bundles are not arranged concentrically; instead, they are scattered throughout a mass of parenchyma tissue internal to the epidermis. Because of this arrangement, neither cortex, medullary rays, nor pith can be discerned. In woody plant stems that undergo secondary growth, it is typical for the epidermis to be sloughed off and replaced by a periderm composed of a phellum, phellogen, and phelloderm. Some species are characterized by having multiple periderms (rhytidome). Lenticles may be present in the periderm and their attributes may serve as diagnostic features. Underneath the periderm are the remnants of the cortex, primary phloem, secondary phloem, vascular cambium, secondary xylem, primary xylem, and pith. Medullary rays are also present. As in the root, the type and arrangement of the principal conducting cells of the vascular tissues; the presence, type, and arrangement of fibers, sclereids, and other tissues; and the presence and location of ergastic material may also be diagnostic features. Rhizomes may have some morphological characteristics similar to those of roots and therefore they may be mistaken for roots. However, rhizomes can be correctly identified as stems because they have distinct nodes and internodes.

LEAVES

Several macroscopic features of leaves that may be diagnostic of the species include the attributes of the leaf blade, petiole, and stipules and the phyllotaxy. The outermost tissue of a leaf blade is the epidermis, followed by mesophyll and vascular tissues. Microscopic diagnostic features of epidermal cells include the cuticle thickness and markings, the shape and arrangement of stomata and guard cells, the arrangement and size of subsidiary cells, stomatal number (number of stomata per unit area),

General Chapters

and stomatal index (number of stomata per unit number of epidermal cells). Additional features useful in the identification of leaf material include types and arrangement of trichomes (plant hairs) present; type and arrangement of mesophyll and vascular tissues; palisade mesophyll ratio; presence and appearance of accessory tissues such as parenchymatous or sclerenchymatous bundle sheaths, paraveinal mesophyll, endodermis, and transfusion tissue; type and arrangement of the principal conducting cells of the vascular tissues; presence, type, and arrangement of fibers, sclereids, and other tissues; and presence, location, and physical appearance of ergastic material.

FLOWERS

Flowers are the best diagnostic morphological features of any flowering plant, and the floral structure is the principal criterion used in plant taxonomy. The diagnostic features of flowers include type of inflorescence; presence, number, and appearance of the primary floral parts (sepals, petals, stamens, and carpels); type of symmetry displayed by the floral parts; relative position of the ovaries in regard to the other parts of the flower; the number of ovules per ovary; type of placentation of the ovary; physical appearance of the pollen grains; presence of nectaries; presence of covering or glandular trichomes; and physical features of accessory structures such as the receptacle and bracts. The histological features and the presence of ergastic materials in the tissues of floral parts are also diagnostic of the species.

FRUITS

The identification of the species of plant from which a fruit was derived may be determined by observing several macroscopic criteria. These criteria include the number of pistils found in the fruit; the number of carpels within each pistil; the number of seeds within each carpel; the placentation of the fruit; and the determination of whether the fruit is dehiscent, indehiscent, or fleshy. Additional diagnostic features include the number of sutures in a dehiscent fruit, the determination of whether the seeds are fused to or free from the pericarp wall, physical features of the three layers of the pericarp of fleshy fruits (epicarp, mesocarp, and endocarp), and presence and physical appearance of accessory tissues such as the receptacle and bracts. Histological features of fruit tissues may aid in identification. The characteristics of the seeds within the fruit are also diagnostic features of the species.

SEEDS

The macroscopic features of seeds used in identification include the shape and size of the seed; appearance of the seed-coat surface; placement of the hilum and micropyle; and presence of accessory structures of the seed coat such as the arils, caruncle, or oil bodies. Physical features of the embryo, such as its size, shape, position, and the number and appearance of the cotyledons, as well as the presence and appearance of accessory nutritive tissues such as the remnants of a megagametophyte (in gymnosperms), perisperm (nucellus), or endosperm, are also diagnostic of the species. Histological features of the seed coat and other structures and tissues of the seed may also be used for species identification.

Microtechnique

Histological analysis of botanical specimens can be performed on whole plant material or plant powder. The use of cytological stain or other reagents may be necessary to visualize certain histological features. Crossed polarizers can be used to detect structures that rotate plane-polarized light. These structures include starch grains, calcium oxalate crystals, some fibers, and grains of sand (present as a contaminant) that can be observed as bright objects against a dark background. One polarizer is commonly placed in the condenser or the light source, and the second polarizer is placed in the ocular. Light entering the slide from below is plane polarized, permitting only some light waves in a specific plane to pass through. When the two polarizers are aligned, the field becomes bright; when the two polarizers are crossed, the field becomes dark.

PROCEDURE FOR TEMPORARY MOUNTS AND POWDERED MATERIAL

General procedure: Plant samples are observed under the microscope by employing different mounting media, stains, or other solutions to assist in the correct identification of the test article. If a USP Authenticated Reference Material is available, prepare it with the same mounting media or reagent solutions used for the test article. Place 1 or 2 drops of water, *Glycerin–alcohol solution, Chloral hydrate solution*, or another reagent solution (see *Preparation and use of reagent solutions, optical devices, and mountants*) in the center of a clean slide. Transfer a small plant tissue section or a portion of plant powder into the mountant or reagent solution, and cover with a clean coverslip. (For specific preparation techniques, see *Preparation of temporary mounts and hand sections, Maceration*, or *Preparation of powdered materials*, as appropriate.) To prevent the formation of air bubbles, the coverslip may be carefully placed at an appropriate angle with its edge making the first contact with the slide and then pressed until it covers the specimen. Using a piece of filter paper, remove excess fluid from the margin of the coverslip. Air bubbles can be removed by placing the slide in a vacuum desiccator. When using chloral hydrate, air bubbles can be removed by gently boiling the sample over a small flame such as that from an alcohol lamp. To replace the mountant or re-

agent solution, place drops of the new mountant or reagent solution on one edge of the coverslip. Place a strip of filter paper at the opposite edge of the coverslip to remove the old mountant or reagent solution and to cause the new mountant or reagent solution to be drawn over the powdered material or tissue. Plant oils can be also washed away from the tissue in this manner when solvent hexane or acetone are washed through the slide followed by water and, if necessary, *Chloral hydrate solution.* Do not use *Chloral hydrate solution* immediately after treating the plant tissue with flammable solvents without thoroughly washing the tissue with water. This is to avoid setting fire to residual solvent when the microscope slide is later placed over a small flame to boil the tissue. Care must be taken when using reagent solutions that are volatile or corrosive to the microscope. To prevent drying of aqueous or chloral hydrate solutions during observation, add a small drop of glycerin to the slide. Observe the mounted sample under an optical microscope (see *Optical Microscopy* 〈776〉), and examine for histological features.

Preparation and use of reagent solutions, optical devices, and mountants: The following reagents, optical devices, and mounting media are used to assist in the identification of cells, tissues, structural features, and ergastic substances in the tissue or powdered material (see *Table 1* and *Table 2*).

Table 1. The Use of Reagent Solutions and Optical Devices

Detection	Reagent Solutions and Optical Devices
Calcium carbonate concretion	*Diluted acetic acid*
Calcium oxalate crystals	*Crossed polarizers*
Cellulose	*Carmine alum–methyl green solution* *Hydriodic acid* *Zinc chloride–iodine solution*
Cytoplasm	*Alcoholic picric acid solution*
1,8-Dihydroxyanthra-quinones	*1 M Potassium hydroxide solution*
Essential oils	*Osmium tetroxide solution* *Sudan III solution*
Inulin	*Naphthol–sulfuric acid solution*
Lignin	*Carmine alum–methyl green solution* *Phloroglucinol–hydrochloric acid solution* *Universal reagent*
Lipids (cutin, waxes, and suberin included)	*Carmine alum–methyl green solution* *Osmium tetroxide solution* *Sudan III solution* *Universal reagent*
Pectin and mucilage	*Ruthenium red solution* *Thionine solution* *Toluidine blue solution*
Phytoglycogen	*Ruthenium red solution*
Protein bodies	*Alcoholic picric acid solution* *Osmium tetroxide solution*
Saponin	*Blood–gelatin mixture* *Iodine–glycerin solution* (confirm by testing with *Blood–gelatin mixture*)
Starch	*Crossed polarizers* *Iodine solution* *Universal reagent*
Tannins and other polyphenols	*Ferric chloride solution* *Osmium tetroxide solution*

Table 2. Bleaching and Clarifying Agents and Mountants

Use	Mountants and Agents
Bleaching agents	*Sodium hypochlorite solution*
Clarifying agents	*Chloral hydrate solution* *Lactochloral solution* *Lactophenol solution*
Mountants	*Glycerin* *Glycerin–alcohol solution* *Glycerin–gelatin mixture* *Water*

Alcoholic picric acid solution—Prepare a 1% solution of picric acid in alcohol. Picric acid is useful to stain cells having dense cytoplasm such as aleurone cells in seeds. Place a small amount of powdered plant material in a test tube, and shake with

General Chapters

about 1 mL of solvent hexane to remove plant oils, which would interfere with the reaction. Centrifuge, and discard solvent hexane. Soak the plant powder in *Alcoholic picric acid solution* for about 30 min. Transfer a portion of the powder to a microscope slide, and observe under a microscope. Cytoplasm and protein bodies turn bright yellow. [CAUTION—Picric acid is explosive when dry. Handle appropriately.]

Blood–gelatin mixture—Add 4.5 g of gelatin powder to 100 mL of a 0.9% sodium chloride solution, and allow to swell for 30 min. Heat the gel, while stirring, to about 80° in a water bath. Cool to 40°, and add 6 mL of defibrinated bovine blood. Heat to 45°–50°, and pour onto a microscope slide in a thin layer of about 1 mm while the slide is in a horizontal position. To prevent loss of blood-gelatin mixture from the sides, seal the microscope slide edge with a 1-cm wide adhesive tape to form a tray. After cooling and solidification, it is ready for use. [NOTE—Store in a humid chamber for NMT 1–2 days at 3°–4°.] To test for saponins, place small clusters of the powdered plant material on the blood–gelatin layer, spacing them a few mm apart from each other, transfer to a humidifier for a few h, and observe. Saponin-containing particles will cause light-transparent zones to appear in the blood–gelatin.

Carmine alum–methyl green solution—Boil 1.5 g of carmine for 30 min in a 15% solution of aluminum potassium sulfate. Cool, filter, and add 10 mL of a 0.75% methyl green solution while stirring. Add 1–2 drops to the plant material. Lignin and suberin turn green and cellulose turns red-violet.

Chloral hydrate solution—Use chloral hydrate TS. When using the solution as a clarifying agent, add a few drops to the plant material, and boil briefly over a small flame. Chloral hydrate dissolves cellular contents and intercellular substances and allows cell walls and shapes to be easily observed. It can be used to assist in the identification of cork, fibers, vessels, calcium oxalate crystals (with the aid of crossed polarizers), trichomes, stomata, and pollen.

Crossed polarizers—This optical device is used to detect calcium oxalate crystals and starch grains (amyloplasts). In polarized light, calcium oxalate crystals and starch grains appear as bright, birefringent objects on a dark background. Starch grains observed under polarized light will also have a Maltese-cross effect with the arms of the cross intersecting at the hilum. Calcium oxalate crystals are usually best viewed after the sample has been clarified with *Chloral hydrate solution* or another clarifying agent.

Diluted acetic acid—Add 1–2 drops to the plant material, and immediately observe under a microscope. Calcium carbonate deposits dissolve with effervescence.

Ferric chloride solution—Dilute 1 mL of ferric chloride TS with 9 mL of water. For the detection of phenol hydroxyl groups, such as tannins and flavonoids, from the side of the coverslip add the solution to the aqueous sample. Tannins and other polyphenols become blue-black to green.

Glycerin—Use as a mountant to prevent the drying of aqueous and chloral hydrate solutions.

Glycerin–alcohol solution—Mix equal volumes of glycerin and alcohol. Use as a mounting medium.

Glycerin–gelatin mixture—Add 10.0 g of powdered gelatin to 60 mL of water. Allow to stand for 2 h, and add 70 mL of glycerin containing 1.5 g of dissolved phenol. Heat in a water bath, and filter through a preheated funnel containing glass wool. The filtered mixture is liquefied before use, and it serves as a mounting medium. Add a few drops to the cut or powdered plant material, and cover with a heated coverslip. This preparation is used for long-term storage of specimen mounts. The margins of the coverslip may be sealed with Canada balsam after a few months of drying.

Hydriodic acid—Add 1–2 drops to plant material. Cellulosic cell walls become blue to blue-violet.

Iodine solution—Add 1–2 drops of 0.1 N iodine VS to the plant material. Starch particles become dark-blue to blue-violet; this reaction is reversible on heating. [NOTE—Proteins, lipids, and cellulose turn yellow to brown; guaiac powder particles become green to blue, but this reagent is not used for diagnostic identification of these features.]

Iodine–glycerin solution—Dissolve 0.3 g of iodine and 1.0 g of potassium iodide in a small quantity of water, and add 10 mL of a mixture of glycerin and water (1:1). Add 1–2 drops to the powdered plant material. Samples containing saponins form yellow lumps or aggregates. If a sample tests positive for saponin, the result has to be confirmed by testing the sample with *Blood–gelatin mixture* as well.

Lactochloral solution—Dissolve 50.0 g of chloral hydrate in 50 mL of lactic acid with gentle heating. Add a few drops to the plant material. Place the microscope slide in a small vacuum desiccator if it is necessary to eliminate air bubbles. *Chloral hydrate solution* and *Lactochloral solution* are used for the same type of identification, except that *Lactochloral solution* is a stronger clarifying agent and it is used for plant material that is more difficult to clarify.

Lactophenol solution—Mix 20 g of lactic acid, 40 g of glycerin, and 20 mL of water. Add 20 g of phenol, and mix. This is a strong clarifying agent suitable for the examination of pollen grains.

Naphthol–sulfuric acid solution—Prepare a 20% solution of 1-naphthol in alcohol. To the plant material add 1 drop of 1-napthol solution and 1 drop of sulfuric acid. Inulin crystals turn brownish red and then dissolve.

Osmium tetroxide solution—Dissolve 0.1 g of osmium tetroxide in 5 mL of distilled water. Add 1–2 drops of the solution so obtained to the plant material. Essential oils, fatty oils and other lipids, tannins, and protein bodies become brown to black.

Phloroglucinol–hydrochloric acid solution—This solution is used for the identification of lignin and other hydroxyphenylpropane derivatives; lignified tissues, such as sclereids, vessels, fibers, and stone cells; and lignified parenchyma. Moisten the powder or the cut sample with phloroglucinol TS, and allow to dry for 2–3 min before placing the coverslip. Add a few drops of a 25% hydrochloric acid solution, and cover with the coverslip. Lignified cell walls turn carmine red. [NOTE—This stain is not stable.] Cells with hydroxyphenylpropane derivatives, such as vanillin and ferulic acid, also turn red. Alternatively, hydroxyphenylpropane derivatives can be extracted from the plant material and the plant material then examined. To extract hydroxyphenylpropane derivatives repeatedly immerse the untreated material in alcohol, mix on a vortex mixer, centrifuge, and discard

the alcohol between washings. Then treat the plant material as specified previously, beginning with the addition of phloroglucinol TS.

1 M Potassium hydroxide solution—Add 1 drop to plant material. Cells containing 1,8-dihydroxyanthraquinones will stain red.

Ruthenium red solution—Add a few drops of ammonium hydroxide to ruthenium red TS. [NOTE—Store the solution protected from light.] Add 1–2 drops to the plant material. Pectin-containing cell membranes, acidic mucilage, and phytoglycogen turn red.

Sodium hypochlorite solution—This solution is used to bleach deeply colored sections. Immerse the plant material in the solution for a few min until sufficiently bleached. Wash the tissue with water, and mount with a suitable mounting agent. [NOTE—Sodium hypochlorite will extract lignin; plant tissue so treated will test negative for lignin.]

Sudan III solution—Dissolve 0.5 g of sudan III in 50 mL of alcohol or isopropyl alcohol with reflux boiling. Cool, filter, and add 50 mL of glycerin. Add 1–2 drops of this solution to plant powder. Essential oils, waxes, cutin, suberin, and fatty oils and other lipids combine with this lipophilic colorant and become orange-red to red after a short time.

Thionine solution—Prepare a 0.2% thionine acetate solution in 25% alcohol. Immerse the dry sample in this solution. After about 15 min, wash out the excess of stain with 25% alcohol. Mucilage will have swollen into spherical globules and turned red-violet, while cellulose, pectin, and lignified septa will turn blue or blue-violet.

Toluidine blue solution—Using toluidine blue, proceed as directed for *Thionine solution*.

Universal reagent

SOLUTION A: Dilute 20 mL of a lactic acid-saturated solution of sudan III with 30 mL of lactic acid.

SOLUTION B: Dissolve 0.55 g of aniline sulfate in 35 mL of water.

SOLUTION C: Dissolve 0.55 g of potassium iodide and 0.05 g of iodine in 5 mL of water, and add 5 mL of alcohol.

PROCEDURE: Combine *Solution A*, *Solution B*, and *Solution C*, and add 2.5 mL of hydrochloric acid while stirring. [NOTE—The solution is used without filtering.] For identification, add 2–3 drops to the sample, and gently boil over a small flame. If necessary, small amounts of *Universal reagent* may be added during boiling. Cover with the coverslip. Lignified elements turn yellow, suberin turns red-brown, lipids turn red, and starch turns blue-violet.

Water—Use as a mounting medium. [NOTE—All grades of water are acceptable for this purpose.]

Zinc chloride–iodine solution—Dissolve 20.0 g of zinc chloride and 6.5 g of potassium iodide in 10.5 mL of water. Add 0.5 g of 0.1 N iodine VS, and shake for 15 min. Filter if necessary. Store in low-actinic glassware. Add 1–2 drops to the plant material, and allow to stand for a few min. Cellulosic cell walls are stained blue to blue-violet.

Preparation of temporary mounts and hand sections: When using the dry plant tissue, soak or gently boil in water until soft. Do not soften too much. Material can then be treated like fresh plant material. When appropriate, use the mountants or reagent solutions listed for use with plant powder to help visualize features of the tissue (see *Preparation and use of reagent solutions, optical devices, and mountants*).

To make an epidermal peel of the leaf, petal, sepal, bract, and other leaf-like appendages, roll the tissue into a cylinder, and nick with a sharp, polytef-coated razor blade that has been wetted with water. Grasp the nicked piece of tissue with forceps, and strip back removing a clear section of the epidermis. Mount in water on a microscope slide, place a coverslip over the tissue, and examine under a microscope.

If it is difficult to obtain an epidermal peel using the previous procedure, proceed as follows. Soak the tissue in a 40%–60% nitric acid solution at 60° for 3–4 min or until the epidermis can be easily peeled. The peel is then washed 3–5 times in water to remove the excess of nitric acid. Neutralize the tissue in a 1% potassium hydroxide solution or a 1% sodium hydroxide solution. Wash the tissue again with water, mount in water on a microscope slide, place a coverslip over the tissue, and examine under a microscope.

An alternative method of preparing leaf tissue for the examination of the epidermis is to heat a leaf fragment (about 5 mm × 5 mm) for 15 min in *Chloral hydrate solution* on a water bath. Transfer the tissue to a microscope slide, add a drop of water, and cover with a coverslip. These procedures can be used to determine the stomatal type, distribution, number, and index.

Stomatal number is determined by counting the number of stomata per unit area of a microscopic field. Determine the stomatal number on at least 10 different sites of the specimen, and calculate a mean value. Keep track of which leaf surface is being observed, abaxial or adaxial, as the stomatal number for different surfaces is frequently significantly different.

To calculate the stomatal index, the specimen is observed under a microscope at a low magnification. The size of the surface is determined with a calibrated micrometer ocular, and the number of stomata and the number of epidermal cells for that area are determined. The stomatal index is calculated:

$$\text{Result} = (100 \times S)/(E + S)$$

S = number of stomata for a given area

E = number of epidermal cells of the same area

Determine the stomatal index on at least 10 different sites of the specimen, and calculate a mean value. Again, keep track of which leaf surface is being observed, abaxial or adaxial, as the stomatal indices for different surfaces is frequently significantly different.

To make a cross section of a leaf or thin roots, stems, or other thin appendages, lay the appendage to be sectioned on a microscope slide. Place another microscope slide over the appendage with a portion of the tissue exposed. Using a sharp, polytef-coated razor blade that has been wetted, cut straight down along the edge of upper slide. Without moving the upper

slide, cut down again with the razor blade at an angle. Some practice may be necessary to be able to get sections thin enough so that when they are mounted and covered with a coverslip, these sections can be used to determine tissue arrangements (for instance, the number of palisade layers in leaf, thickness of cuticle, types of trichomes, types of vascular bundles, and the like). Because razor blades dull quickly, they have to be replaced frequently.

Use the cross section of leaf tissue so obtained to determine the palisade mesophyll ratio. Alternatively, boil leaf fragments of about 2 mm² in *Chloral hydrate solution*, mount, cover with a coverslip, and observe under a microscope. Identify groups of four adaxial epidermal cells, and count the palisade mesophyll cells that are lying below and are at least 50% covered by the epidermal cells. This value divided by 4 is the palisade mesophyll ratio. Determine the palisade mesophyll ratio of at least 10 groups of epidermal cells, and calculate a mean value. Palisade mesophyll ratio can also be determined on powdered leaf material.

To make a cross section of thick stems, roots, or other plant parts, including woody tissues, hold the tissue in one hand and using a sharp, polytef-coated razor blade that has been wetted with water, shave a cross section from the appendage. Mount in water, another medium, or reagent solution, place a coverslip over the material, and examine under a microscope. Sections thin enough to determine vascular tissue arrangement, ray type, parenchyma distribution, presence of crystals, and the like can usually be made with a little practice.

Maceration: For the proper identification of a plant material, it is sometimes necessary to macerate the tissue into its individual cells before microscopic examination. This can be an especially useful technique for woody or other hard tissues. The material is cut into small pieces of about 2-mm thickness and 5-mm length or sliced into pieces of about 1-mm thickness. Depending on the nature of the cell wall, one of the following methods is used. For hard or highly lignified tissues, use *Method I*. For tissues that are not extensively lignified, use *Method II*.

Method I

Solution A: Use 4 N nitric acid solution.

Solution B: Prepare a mixture of 1.2 M chromium trioxide solution and sulfuric acid (7:4).

Procedure: Place the plant material in a test tube containing about 5 mL of a mixture of *Solution A* and *Solution B* (1:1). Heat in a water bath for 20 min. Wash the tissue repeatedly with water, and transfer to a microscope slide. Tease the tissue apart with a dissecting needle, add 1–2 drops of mountant, cover with a coverslip, and examine under a microscope. If necessary, cells can be further separated from each other by pressing down on the coverslip with a gentle, sliding motion. The macerated tissue will test negative for lignin.

Method II

Procedure: Place the plant material in a test tube containing about 5 mL of 2 M potassium hydroxide solution. Heat in a water bath for 30 min. Wash the tissue repeatedly with water, and transfer to a microscope slide. Add 1–2 drops of mountant. Place a coverslip over the tissue, press down, squashing the tissue, and examine under a microscope. The macerated tissue will test negative for lignin.

Preparation of powdered materials: Place 1 or 2 drops of water, another mountant, or a reagent solution in the center of a clean slide. Moisten the tip of a dissecting needle with water, and dip into the powder under test. Transfer a small amount of material that adheres to the needle into the fluid on the slide, and stir thoroughly and carefully. Cover with a clean coverslip. Because the arrangement of the tissue structures within the plant tissue has been destroyed, the important features for observation of the powdered plant material are the chemical and physical features of tissues and cell types, as well as the presence and chemical and physical features of ergastic substances. The specific tissues, cells, and ergastic substances to be examined are specified in the individual monograph.

PROCEDURE FOR THIN, PERMANENT MOUNTS

When it is necessary to reveal detailed histological features of a plant specimen, thin tissue sections have to be obtained. The sections need to be thin enough to transmit light, and they have to be cut in such a plane that the desired features are exposed. The plant material is properly killed, fixed, dehydrated, and embedded in paraffin or other embedding media. The embedding medium is used as a solid-support matrix during tissue sectioning. After sectioning and mounting, staining of the specimen is frequently performed to aid in the differentiation of certain structures. [Note—The process of fixing, dehydration, embedding, and staining can be significantly expedited by utilizing a microwave oven specifically designed for histological work.]

Killing and fixation: As a first step in preparing plant material for sectioning, living cells are killed, and the tissue is preserved. This is most frequently done by employing a chemical fixative. A good general purpose fixative for plant material is a mixture of formaldehyde, acetic acid, and alcohol (FAA).

FAA solution—Mix 50 mL of alcohol, 5 mL of glacial acetic acid, 10 mL of formaldehyde solution, and 35 mL of water. [Note—Periodically prepare fresh solution, as it loses effectiveness with storage.]

Procedure—Completely immerse the plant material in the *FAA solution*. Allow the material to remain immersed for 18–24 h at room temperature. Plant material can be kept indefinitely in *FAA solution*, as long as it remains completely immersed and is not allowed to dry out. Certain plant tissues may require vacuum infiltration to facilitate the penetration of the fixative. Vacuum infiltration is required if the tissue has abundant air spaces or epidermal hairs or if it floats on top of the fixative solution. Place the tissue in a small vial containing the fixative. Place the uncapped vial into a bell jar or desiccator that is connected to a vacuum source, preferably an oil-sealed vacuum pump. The vacuum is vented into a fume hood to prevent fixative vapors

from filling the room. Slowly turn on the vacuum. Do not use a strong vacuum because the fixative may start to boil and damage the tissue. As residual air is pulled from the tissue, it will rise to the surface. Turn the vacuum on and off through several cycles until the tissue stays at the bottom of the container during an "on" cycle.

Tissue dehydration: Paraffin and other embedding media are hydrophobic; thus, water must be removed from the plant tissue after fixation. This is accomplished by immersing the fixed tissue in dehydration solutions, which are a series of mixtures of alcohol and water with increasing alcohol concentration. The final solution in the series is dehydrated alcohol. Begin by washing the fixed tissue once or twice with fresh 50% alcohol to remove traces of FAA. Remove this solution, and subsequently remove any other dehydration solution, by decanting the solution or removing it with the aid of a glass pipet. Add the first dehydration solution (70% alcohol) to the vial, completely immersing the tissue. The graded alcohol–water series and the suggested times for tissue immersion are listed in *Table 3*.

Table 3

Dehydration Solution	Time (h)
50% alcohol	1–2
70% alcohol	1–2
90% alcohol	1–2
95% alcohol	1–2
Dehydrated alcohol containing 0.1% of safranin O	2–4
Dehydrated alcohol	1

Safranin O is added to the penultimate dehydration solution in the series to visualize the tissue when it has become embedded in paraffin. If the tissue to be sectioned is hard or woody, the time for each step in the series may need to be increased to up to 24 h. If necessary, the tissue can be stored for several days in 70% alcohol or in solutions of even higher alcohol concentrations.

Embedding

Preparation for embedding

ALCOHOL REMOVAL: Paraffin is the most common embedding medium, although other embedding media are available. After dehydration, alcohol is removed from the tissue by using a graded series of dehydrated alcohol–xylene solutions, because paraffin is not soluble in alcohol. The graded dehydrated alcohol–xylene series and the suggested times for tissue immersion are listed in *Table 4*.

Table 4

Alcohol Removal Solution	Time (h)
A mixture of dehydrated alcohol and xylene (3:1)	1
A mixture of dehydrated alcohol and xylene (1:1)	1
A mixture of dehydrated alcohol and xylene (1:3)	1
Xylene	1
Xylene	1

XYLENE REMOVAL: Once xylene has completely replaced alcohol, paraffin is added slowly to infiltrate the tissue and remove xylene. Proceed as follows:

1. For each mL of xylene add about 1 paraffin chip to the tissue vial, cap, and allow to stand at room temperature for 4 h. Add additional paraffin chips until no more chips dissolve.
2. Place the tissue in an oven maintained at 42°–45°. Add 2–3 paraffin chips every h until no more chips dissolve at that temperature.
3. Pour off one-third of the volume, and replace with an equal volume of melted paraffin. Do not cap, and transfer the vial to an oven maintained at 58°–60°.
4. After the paraffin remelts (about 4 h later) pour off one-half of the volume, and replace with an equal volume of melted paraffin. Transfer the vial to the oven maintained at 58°–60° if the paraffin begins to solidify.
5. Repeat the fourth step twice more, then pour off the entire volume of paraffin–xylene. Replace with pure melted paraffin. About 4 h later, pour off the paraffin, and replace with fresh pure melted paraffin. Repeat the pouring off and replacement 4 h later, and allow to stand overnight. [NOTE—Transfer the vial to the oven maintained at 58°–60° if the paraffin begins to solidify at any point.]

Embedding procedure—Pour the tissue with the paraffin to an embedding boat. Paraffin has to completely cover the tissue by about 3–5 mm. Place the embedding boat on top of a preheated warming platform that is designed for histology work. Adjust the tissue in the boat to its proper orientation for sectioning. Slowly cool the paraffin by sliding the boat down to the cool side of the platform until the paraffin has solidified. Immerse the paraffin block in ice water to rapidly cool the block and to prevent paraffin crystals from forming. Store the paraffin block at 4°.

Sectioning and mounting: Cut the paraffin block into pieces, each containing one tissue sample. Trim the paraffin block, as close to the tissue mass as possible, to form a rectangle or a slight trapezoid. Such trimming will prevent sectioning problems due to excess paraffin around the tissue. To make transverse sections, orient the tissue at a right angle to a wooden tissue

block of which the face has been soaked in melted paraffin. Affix the paraffin block to the face of the tissue block. Add a small amount of melted paraffin to the base of the paraffin block to help form a tighter seal. Cool the block to 4°.

Properly mount and adjust the tissue and paraffin block in a microtome. Use a sharp stainless-steel microtome knife that has been properly honed. Set the microtome to cut sections 8–15 µm thick (10-µm thickness is optimal for most tissues). Cut individual or serial sections. Prepare a microscope slide as follows. An adhesive may be prepared as a solution containing 1% of gelatin and 0.5% of sodium benzoate that is heated to 30°–35° to dissolve the gelatin. Smear a thin film of the adhesive so obtained onto the slide, allow to dry, rinse with a 4% solution of formaldehyde TS, and add a small amount of water. Plate the cut sections upside down on the slide, so that they float on water, and flood with a 4% solution of formaldehyde TS. The sections will immediately spread out and wrinkles will disappear.

Place the slide on a warming platform, maintained at 42°, to relax the sections. Pipet, and blot the excess water and formaldehyde solution. Dry overnight in an oven at 42° to ensure adherence of the tissue section to the slide.

Staining

Preparation for staining—Immerse the microscope slide with the affixed tissue twice into xylene, each time for 10–15 min, to remove paraffin. Then immerse the slide into the following sequence of solutions, leaving it in each solution for 5 min and taking care not to dislodge the tissue: a mixture of dehydrated alcohol and xylene (1:1), dehydrated alcohol, alcohol, and a 70% alcohol solution. The tissue is bleached prior to staining if it is opaque because of the presence of tannins or other ergastic materials. To bleach, dip the slide into a 1% potassium permanganate solution for 1 min, rinse with water, dip into a 5% oxalic acid solution for 1 min, and rinse thoroughly with water. The material is ready for staining. One of the following two staining procedures is recommended for most botanical identification work. The first staining procedure uses safranin O counterstained with fast green. An alternative staining procedure uses safranin O counterstained with orange G.

Safranin O–fast green staining

SAFRANIN O STAINING SOLUTION: Prepare a mixture of methoxyethanol, dehydrated alcohol, water, and formaldehyde solution (50:25:25:2). Add a sufficient quantity of sodium acetate to obtain a solution containing 1% of sodium acetate, and mix. Add a sufficient quantity of safranin O to obtain a solution containing 1% of safranin O, and mix.

FAST GREEN STAINING SOLUTION: Prepare a mixture of methoxyethanol, dehydrated alcohol, and methyl salicylate (1:1:1) containing 0.05% of fast green FCF.

PROCEDURE: Once the tissue has been rehydrated to 70% alcohol as described in *Preparation for staining*, immerse for 2–24 h, depending on the tissue, in *Safranin O staining solution*. Remove excess stain by immersing the slide in water several times. Transfer the slide to an alcohol solution containing 0.5% of picric acid for 2–10 s to further remove excess stain from the section and to assist in differentiation of the tissue structures. To stop the action of the picric acid, transfer the slide for 10 s to 1 min to an alcohol solution containing 4 drops of ammonium hydroxide in each 100 mL of alcohol. Transfer the slide to dehydrated alcohol for 10 s. Visually inspect the stained tissue under a microscope to see if further destaining with picric acid is necessary. Counterstain for 10–15 s in *Fast green staining solution*. Transfer slide through two changes of a mixture of methyl salicylate, dehydrated alcohol, and xylene (2:1:1), each change lasting for 5–10 s. Then transfer the slide to a mixture of xylene and dehydrated alcohol (95:5) for 1 min. Transfer through two changes of xylene. Store in xylene until ready to mount the coverslip. Chromosomes, nuclei, and lignified, cutinized, or suberized cell walls will be stained red. Cytoplasm and cellulosic cell walls will be stained green to blue, depending on the pH of the tissue.

Safranin O–orange G staining

SAFRANIN O STAINING SOLUTION: Prepare a 0.004% solution of safranin O.

ORANGE G STAINING SOLUTION: Dissolve 2 g of orange G, 5 g of tannic acid, and 4 drops of hydrochloric acid in water, and dilute with water to 100 mL.

PROCEDURE: Once the tissue has been rehydrated to 70% alcohol as described in *Preparation for staining*, sequentially transfer the slide through the series of solutions in *Table 5*.

Table 5

Solution	Time
35% alcohol	5 min
A filtered 2% zinc chloride solution	1 min
Water	5 s
Safranin O staining solution	5 min
Water	5 s
Orange G staining solution	1 min
Water	5 s
A filtered 5% tannic acid solution	5 min
Water	3 s
A 1% ferric ammonium sulfate solution	2 min
Water	15 s
45% alcohol	10 s
90% alcohol	10 s
Dehydrated alcohol	10 s

Table 5 *(Continued)*

Solution	Time
A mixture of dehydrated alcohol and xylene (1:1)	1–2 min

Finally, store in xylene until ready to mount the coverslip. Cellulosic cell walls will stain blue-black, nuclei will stain yellow, starch grains will stain black, and lignified cell walls will stain red.

Mounting the coverslip: The mounting of a coverslip over the tissue completes the preparation of the slide. Canada balsam, diluted with a small portion of xylene, can be used as an adhesive. Other mountants are also commercially available. Upon drying of the mountant, the slide can then be examined under a microscope. The entire process of making permanent microscope slides can be expected to take 5 or more days.

Scanning electron microscopy: Botanicals in commerce are often encountered in the form of powder or in pieces, thus making authentication by the routine method of cross-sectioning of the article difficult and often impossible. Structures such as xylem vessels and trachids may be broken into smaller bits, making detection of pitting and lignifications on the walls difficult if not impossible using an optical microscope. Structures that are resistant to these processes are most useful in identification. Scanning electron microscopy (SEM) is useful for characterizing the size and morphology of microscopic specimens. The more detailed differential characteristics in the structure of trichomes and peculiar elements in the epidermis, along with superficial granular material containing specific compounds, can be observed and identified with SEM, which assists in the identification of particular species. SEM has been used extensively to investigate surface topology of a wide variety of plant materials. It can play a vital role in authentication of an entire botanical, those in powder form, distinguishing between closely related species, and can be used to examine a mixture of powders.

Introduction and general information about SEM as applied to pharmacopeial articles can be found in general information chapter *Scanning Electron Microscopy* ⟨1181⟩.

SEM produces a higher resolution compared to that possible using an optical microscope, and the images obtained are three-dimensional. SEM has the advantage of providing images with a large depth of field, which allows a substantial thickness of the sample to be in focus at one time. It allows the analysis of specimens as large as 50 mm, making it possible to produce detailed topographical electron micrographs of an object clearly visible to the naked eye. The maximum resolution for SEM (minimum distance by which the two objects can be separated and observed as distinct objects) is 10–20 nm compared to 200–300 nm for optical microscopy. Typical SEM magnification ranges from ×10 to ×300,000. Commercial SEM instruments also are available with magnifications as low as ×5 and as high as ×2,000,000. In comparison, typical modern optical microscopes have a magnification range of ×10 to ×2000. At low magnification, images obtained with SEM provide more information than those of optical microscopy. SEM can produce images for which contrast is based on compositional variations of specimens.

CHEMICAL IDENTIFICATION

To help ensure the authenticity of the article, chemical identification is performed in conjunction with the botanical identification outlined previously. Chemical identification typically employs chromatographic procedures to detect the presence of marker compounds specified in the individual monograph. Spectroscopic or chromatographic profiles can be used to achieve chemical identification by fingerprint comparison against that of a reference sample or standard. Examples of spectroscopic methods include ultraviolet (UV), infrared (IR), and Fourier transformed IR (see *Spectrophotometric Identification Tests* ⟨197⟩). Examples of chromatographic methods include high-pressure liquid chromatography (HPLC), thin-layer chromatography (TLC), two-dimensional-TLC, and gas chromatography (GC) (see *Chromatography* ⟨621⟩). Analytical methods used for fingerprinting should be capable of detecting as many chemical constituents as possible. Multiple fingerprints, using a combination of analytical methods with different separation principles and test conditions, may be useful. In addition to the spectroscopic chromatographic methods, qualitative wet-chemistry methods may also be specified in the individual monograph.

Chemotaxonomy

Chemotaxonomy is the classification of the plants based on their chemical constituents and it may be useful in botanical articles identification. Metabolic compounds found within plant tissues can be divided into two broad categories based on their functions. The first category comprises primary metabolites—metabolites involved in the physiological plant processes that are absolutely necessary for life and ubiquitous throughout the plant kingdom. These processes include photosynthesis; respiration; and nucleic acid, protein, carbohydrate, and lipid metabolism. The second category comprises secondary metabolites—compounds that are thought not to be absolutely necessary for plant processes, although they may have important functions in the plant's interactions with other organisms, such as allelopathic interactions; in chemical defense against herbivores and plant pathogens; and in signaling to attract pollinating and seed-dispersing animals. Many secondary metabolites are known to have pharmacological activity. They are also the basis for the chemotaxonomy of plants. Secondary metabolites fall into several different chemical classes such as nonprotein amino acids, flavonoids, xanthones, coumarins, polyacetylenes, cyclic polyketides, monoterpenes, sesquiterpenes, iridoids, triterpenes, sterols, nitrogen-containing terpenes, and alkaloids. These chemical classes are not ubiquitous throughout the plant kingdom, but tend to be specific to certain botanical classes, orders, and families. Moreover, many chemical subclasses and individual secondary compounds are specific to certain subfami-

lies, genera, or species. It is these chemical subclasses and individual compounds that can be used as marker compounds to aid in the proper identification of plant material.

Active Principles and Marker Compounds

For chemical identification of botanical articles, extracts are prepared. Such extracts are usually complex mixtures of several chemical constituents. For a large majority of botanical extracts it is not known with certainty which of the various components is responsible for the reported pharmacological effect. It is generally believed that several constituents act synergistically to provide the reported effect. For articles for which compendial monographs are provided, certain chemical constituents of the article are chosen and quantitative test procedures for determining their content are provided. The choice of such constituents, known generally as marker compounds, is based on certain considerations. Currently, the following types of marker compounds are specified in compendial monographs and may be identified in raw materials:

ACTIVE PRINCIPLES: These are constituents that have proven clinical activity. A minimum content or range for the active principles is usually specified in the individual monograph. A quantitative determination of active principles during stability studies of botanical dosage forms provides necessary information for arriving at suitable expiration dates.

ACTIVE MARKERS: These are constituents that have known pharmacological activity contributing in some extent to efficacy. However, the clinical efficacy for these constituents may not be proven. A minimum content or range for active markers is usually specified in individual monographs. A quantitative determination of active markers during stability studies of botanical dosage forms provides necessary information for arriving at suitable expiration dates.

ANALYTICAL MARKERS: Where neither defined active principles nor active markers are known, other constituents of the botanical extract amenable to quantitative determination are chosen. These markers aid in the positive identification of the article under test. In addition, maintaining a minimum content or a specified range of the analytical markers helps to achieve standardization of the plant extract and to arrive at a suitable expiration date during stability studies.

NEGATIVE MARKERS: These are constituents that may have allergenic or toxic properties, rendering their presence in the botanical extract undesirable. For example, ginkgolic acids from ginkgo belong to this category. A stringent limit for these negative markers may be specified in individual monographs.

Use of USP Reference Articles

Reference articles are used to assist in the identification of marker compounds within the test article. Reference articles are either USP Authenticated Reference Materials or USP Reference Standards (see *USP Reference Standards* ⟨11⟩), whichever is specified in the individual monograph. USP Reference Standards used to identify marker compounds in the test articles may be a single purified chemical entity, a mixture of purified chemical entities, or a standardized extract prepared from the authenticated plant article. USP Reference Standards may also be used to quantitate marker compounds, as specified in the individual monograph.

A pulverized test article undergoes a specified extraction procedure (see *Methods of Extraction* in *Botanical Extracts* ⟨565⟩) and is prepared for chromatographic or wet-chemistry analysis. If a USP Authenticated Reference Material is available, then it undergoes the same extraction procedure as the test article. The test preparation and reference articles then undergo the same chromatographic or wet-chemistry procedure specified in the individual monograph. The response of the test preparation is compared to the response of reference articles to determine the presence of the marker compounds in the test article.

DNA-BASED METHODS FOR AUTHENTICATION OF ARTICLES OF BOTANICAL ORIGIN

Because morphological identification often is not possible when the original plant material consists of dried, cut and shifted, or processed plant parts or when the material consists only of a whole, single plant part containing no taxonomic characters, additional identification methods, such as DNA-based identification, often are required for these sample types. DNA-based methods have been shown to be efficient in distinguishing genuine plant materials from adulterants in complex botanical matrixes and can complement traditional botanical identification methods that rely on morphological features or chemistry. In addition, DNA-based methods often are more reliable than traditional methods, especially when applied to single-organ specimens that lack diagnostic taxonomic characters, to powdered materials in which the distinguishing characteristics are no longer visible, or when it is difficult to distinguish among closely related or morphologically similar species.

DNA Barcoding

DNA barcoding is a particular type of DNA sequence-based identification method that uses short sequences of specific nuclear or plastid DNA loci for identification of plant species. The assays rely on comparison of nucleotide sequences from a specific stretch of DNA (DNA sequences or DNA barcode) to perform DNA sequence-based identification. Further, DNA-based methods, such as next-generation sequencing (NGS) technologies, are able to identify multiple species in a mixture, including expected and unexpected species.

Botanical Identification Using DNA (Sanger) Sequencing

The process for botanical identification using DNA (Sanger) sequencing includes marker selection, DNA extraction, polymerase chain reaction (PCR) primers and amplification, DNA sequencing, and comparison with reference materials, as described in the following sections. See *Nucleic Acid-Based Techniques—Extraction, Detection, and Sequencing* ⟨1126⟩, *Nucleic Acid-Based Techniques—Amplification* ⟨1127⟩, and *Nucleic Acid-Based Techniques—Genotyping* ⟨1129⟩ for additional information.

MARKER SELECTION

The chosen sequence must be sufficiently specific to capture any potential primary and adulterant species in the sample but also sufficiently universal to avoid false-negative reactions for closely related species. For example, a species-specific primer is not appropriate for most identification procedures because adulterants cannot be detected and amplification failure can result because of either the absence of the species or degraded DNA. In many cases, a single marker may be sufficient for identification, but multiple markers from different parts of the genome (e.g., plastid or nuclear material) ensure that hybrids can be detected. Typically, regions used for DNA sequence identification range from 100–1500 base pairs in length. Smaller DNA fragments may be less susceptible to DNA degradation.

DNA EXTRACTION

Before amplification of the desired marker can be performed, the total genomic DNA must be extracted. The suitability of a procedure for genomic extraction depends on the starting material and the purity of the DNA required for downstream applications. The principal procedures are described as follows, and several commercial kits are available to accommodate different sample types and applications.

Total genomic DNA must be extracted from ground plant material. Plant materials can be homogenized manually using a mortar and pestle, mechanical grinder, or other apparatus depending on the nature of the material. Total genomic DNA extraction and purification can be challenging because of the abundance of secondary metabolites (polysaccharides, tannins, essential oils, phenolics, alkaloids, and waxes) in many medicinal plant species. Some of the secondary metabolites may coprecipitate with DNA during extraction and may inhibit further enzymatic reactions, including restriction digestion and PCR. In particular, large amounts of complex polysaccharides can make extraction of usable DNA impossible, rendering the aqueous portion of the extract too viscous to allow efficient separation of DNA from the contaminating polysaccharides. This type of contamination can lead to poor DNA yield and can prevent access by modifying enzymes.

Numerous commonly used DNA extraction methods are appropriate for a wide range of fresh and dried plant materials, including cetyl trimethylammonium bromide, silica-based methods, and a variety of commercially available kits that use silica columns or glass-coated magnetic beads. Although many of these methods work well on both fresh and dried materials and on any plant part, those that are degraded or contain significant levels of secondary compounds or other PCR inhibitors may require minor adjustments to standard extraction protocols.

PCR PRIMERS AND AMPLIFICATION

Typically, PCR primers are between 18 and 30 bases in length and amplify a region between 100 and 1500 base pairs in length. As noted, PCR primers may be universal, meaning they are capable of amplifying all potential organisms that are present in a test sample (including fungi, plants, and animals or an important and predicable subset), or they are taxon specific, meaning they have been designed to amplify only organisms in a targeted set (i.e., family, genus, species, or subspecies). A number of nuclear, mitochondrial, and plastid gene regions are used for universal amplification, including nrITS, nrITS1, nrITS2, *matK*, *rbcL*, *psbA–trnH* intergenic spacer, *cox3*, *COI* (also known as *cox1*), external transcribed spacer, 18*S*, 5*S*, *trnL–trnF* intergenic spacer, and *trnL* intron. Taxon-specific primers may be designed on the basis of proteins found in specific plant groups (e.g., the soy lectin gene found in soy) or by obtaining sequences of any variable DNA region for the target taxon and designing primers that specifically bind only to sequences from the taxon of interest.

DNA SEQUENCING

Most commonly, DNA sequencing is conducted using the Sanger protocol that has been modified to use fluorescent dye terminators on a capillary electrophoresis apparatus, although a number of emerging sequencing technologies [e.g., next-generation sequencing (NGS)] are now taking root. Once fluorescent dye has been incorporated into the amplified DNA, the bases are identified by their emission of light at different wavelengths. The resulting data are a chromatogram that can be visualized and analyzed by several sequence-analysis computer programs.

COMPARISON WITH REFERENCE MATERIALS

DNA sequences of test articles are compared to sequences obtained from multiple reference materials in an aligned matrix (commonly referred to as an alignment), which allows the sequences to be visually inspected to identify diagnostic nucleotide positions. Although numerous computer programs are able to automate comparisons between sequences from test articles and reference sequences, performance varies widely. Investigators should always manually check the results suggested by computer programs to confirm identity. Positive identifications are not possible when the sequences from test articles fall outside the range of known variation represented in the reference sequences. If a sufficiently large number of reference materials have been used to develop the assay, most test materials should be identified without ambiguity based on DNA sequence data.

⟨565⟩ BOTANICAL EXTRACTS

In the extraction practice for articles of botanical origin, the constituents of interest are completely or partially separated from other components with the aid of water, alcohol, alcohol-water mixtures, or other suitable solvents. This extraction process involves the removal of the desired constituents from the plant matter with suitable menstrua, the evaporation of all or nearly all of the solvent, and the adjustment of the residual fluids, masses, or powders to the prescribed standards. Suitable inert substances may be added as carriers or diluents to improve physical characteristics. Suitable antimicrobials and other preservatives may be added to preserve the integrity. Extracts may be subjected to processes that increase the content of characterized constituents, decrease the content of unwanted constituents, or both. Extracts with no added inert substances and no processing beyond the extraction are called native extracts. In some preparations, the plant matter may be pretreated by inactivation of enzymes and microbial contaminants, grinding, defatting, or a similar procedure.

Extracts may be defined as preparations with liquid, solid, or semisolid consistency. The products obtained by extraction are fluidextracts, powdered extracts, semisolid extracts, and tinctures.

METHODS OF EXTRACTION

Percolation

In the manufacture of extracts, percolation is a commonly used method. The crude material being extracted is reduced to pieces of suitable size, if necessary, then mixed thoroughly with a portion of the specified solvent, and allowed to stand for about 15 minutes. The mixture is transferred to a percolator, sufficient amount of the specified solvent is added to cover the entire solid mass, and the mixture is allowed to percolate slowly (at a rate of not more than 1 mL per minute for 1000 g of material), the matter to be extracted being always covered with a layer of solvent. The residue may be pressed, and the obtained fluid is combined with the percolate. The entire percolates are concentrated, generally by distillation under reduced pressure, so as to subject the constituents of interest in the article under extraction to as little heat as possible.

Maceration

Unless otherwise specified, the crude material being extracted is reduced to pieces of suitable size, mixed thoroughly with the specified extracting solvent, and allowed to stand at room temperature in a closed container for an appropriate time, with frequent agitation until soluble matter is dissolved. The mixture is filtered, the insoluble material is washed with the same solvent used for maceration, and the filtrates are combined and concentrated, usually under reduced pressure, to the desired consistency.

PREPARATIONS

Fluidextracts

FLUIDEXTRACTS, also known as liquid extracts, are preparations of plant matter, containing alcohol as a solvent or as a preservative, or both, and are so made that each mL contains the extracted constituents of 1 g of the crude material that it represents, unless otherwise specified in the individual monograph. They may be prepared from suitable extracts and may contain suitable antimicrobial or other preservatives.

Pharmacopeial fluidextracts are made by percolation, often following a period of maceration. The required solvent is specified in the individual monograph. The common manufacturing procedure includes concentration of the more diluted portion of percolate by evaporation or distillation under vacuum at temperatures below 60°. The time of maceration and the rate of

flow during percolation may be varied to adjust for the quantity and nature of the crude material under extraction, provided that the composition of the extracted constituents of interest is not adversely affected.

The rate of flow of the percolate can be slow, moderate, or rapid. With reference to the extraction of 1000 g of the starting material, at a slow rate, not more than 1 mL of percolate is produced per minute; at a moderate rate, between 1 and 3 mL per minute is produced; and at a rapid rate, between 3 and 5 mL per minute is produced. A fluidextract that tends to deposit sediment may be aged and filtered, or the clear portion may be decanted, provided that the resulting clarified liquid conforms to the Pharmacopeial standards.

Powdered Extracts

POWDERED EXTRACTS are solid preparations having a powdery consistency obtained by evaporation of the solvent used for extraction. They may contain suitable added substances such as excipients, stabilizers, and preservatives. Standardized powdered extracts are adjusted to the defined content of constituents, using suitable inert materials or a powdered extract of the plant matter used for preparation. Where applicable, a limit for the solvent used for extraction is specified in the individual monograph.

Semisolid Extracts

SEMISOLID EXTRACTS, also known as soft extracts or pillular extracts, are preparations having consistencies between those of fluidextracts and those of powdered extracts, and are obtained by partial evaporation of the solvent, water, alcohol, or hydroalcoholic mixtures being used as extracting solvents. They may contain suitable antimicrobial or other preservatives. A semisolid extract and a powdered extract obtained from the same material are interchangeable as drugs or as supplements, but each has its own advantages.

General Pharmacopeial Requirements

Unless otherwise specified in the individual monographs, Pharmacopeial requirements for the fluidextracts, powdered extracts, and semisolid extracts are as follows.

Packaging and Storage—Store in tight, light-resistant containers. [NOTE—See *Preservation, Packaging, Storage, and Labeling* under *General Notices and Requirements*.]

Labeling—Label it to indicate the name of the plant part used; the names of solvents, other than the hydroalcoholic solvents, used in preparation; the content, in percentage, of active principles or marker compounds identified in the individual monograph; and the name and concentration of any added antimicrobial or other preservative. Where active principles are unknown, the ratio of starting material to final product is stated. For semisolid extracts and powdered extracts, the identity and quantity of any added excipient is also indicated. In such cases the percentage of native extract may also be stated.

Residue on Evaporation—Transfer promptly about 2 mL, accurately measured, of Fluidextract, about 0.5 g of Powdered Extract, or about 2 g of Semisolid Extract to a suitable tared, round-bottom flask. Evaporate to dryness on a water bath, and dry the residue at 100° to 105° for 3 hours. Allow to cool in a desiccator over phosphorus pentoxide, and determine the weight of the residue obtained: not less than 95% of Powdered Extract specimen remains as residue; or not less than 70% of Semisolid Extract specimen remains as residue. [NOTE—Limits for Fluidextracts are specified in the individual monographs.]

Residual Solvents—If prepared with solvents other than alcohol, water, or alcohol-water mixtures, it meets the requirements for *Residual Solvents* ⟨467⟩. [NOTE—See ICH document *Impurities: Residual Solvents* for related information.]

Pesticide Residues—Botanical extracts, tinctures, or other pharmaceutical forms might contain pesticide residues at either enriched or reduced levels compared to their native form as plant materials. Unless otherwise indicated in the monograph, the limits for pesticides in extracts of botanical articles are calculated by the following formula:

$$\text{If } E \leq 10\text{: Limit (mg/kg)} = L \times E$$

$$\text{If } E > 10\text{: Limit (mg/kg)} = AM/100B$$

where L is the limit in the original article as listed in *Table 4* (see *Pesticide Residue Analysis* under *Articles of Botanical Origin* ⟨561⟩), or EPA tolerance or the FDA action level; E is the plant to extract ratio (i.e. the ratio between the quantity of botanical article used in the manufacture of the extract and the quantity of the extract obtained); A is the acceptable daily intake (ADI), as published by FAO-WHO, in mg/kg of body weight; M is body weight, in kg (60 kg); and B is the daily dose of the extract, in kg.

NOTE—The higher pesticide limits for extracts of botanical ingredients may be justified if the suggested intake or dose of the extract is reduced by a factor which is higher than E.

A total or partial exemption from the test may be granted when the complete history (nature and quantity of the pesticides used, date of each treatment during cultivation and after harvest) of the treatment of the batch is known and can be checked precisely according to good agricultural and collection practice (GACP).

Alcohol Determination, ***Method II*** **⟨611⟩ (if present):** Between 90% and 110% of the labeled amount of C_2H_5OH is found in Fluidextract and Semisolid Extract.

Tinctures

TINCTURES are liquid preparations usually prepared by extracting plant materials with alcohol or hydroalcoholic mixtures. Traditionally, tinctures of potent articles of botanical origin represent the activity of 10 g of the drug in each 100 mL of tincture, the strength being adjusted following the test for content of active principles or marker compounds. Most other plant tinctures represent 20 g of the respective plant material in each 100 mL of tincture.

Different tinctures are not always diluted to obtain the same ratio of starting plant material to final tincture. This ratio will depend on the requirements prescribed in the specific tests for content of active principles or marker compounds included in the individual monographs. As tinctures are being prepared, they are assayed in accordance with these content tests. Using the values obtained from such assays, the final concentration of a tincture is adjusted by adding more solvent or by evaporating part of the solvent.

Unless otherwise specified, tinctures are usually prepared from coarse powder or fine cuttings of plant materials either by a percolation process or a maceration process.

PERCOLATION PROCESS

Carefully mix the ground mixture of ingredients with a sufficient quantity of the prescribed extracting solvent to render it evenly and distinctly damp, allow it to stand for 15 minutes, transfer it to a suitable percolator, and pack the mass firmly. Pour on enough of the specified extracting solvent to saturate the drug, and cover the top of the percolator. When the liquid is about to drip from the percolator, close the lower orifice, and allow the drug to macerate for 24 hours or for the time specified in the monograph. If the test for content of active principles or marker compounds is not required in the individual monograph, allow the percolation to proceed slowly or at the specified rate (for definitions of flow rates, see under *Fluidextracts*), gradually adding sufficient quantity of extracting solvent to produce 1000 mL of tincture, and mix. If a test for content of active principles or marker compounds is required, collect only 950 mL of percolate, mix, and test a portion of it as directed in the individual monograph. Dilute the remainder of the percolate with as much of the prescribed extracting solvent as calculation from the content test indicates is necessary to produce a tincture that conforms to the requirements, and mix.

MACERATION PROCESS

Macerate the drug with 750 mL of the prescribed extracting solvent in a closed container, and put in a warm place. Agitate it frequently during 3 days or until the soluble matter is dissolved. Transfer the mixture to a filter. When most of the liquid has drained, wash the residue on the filter with a sufficient quantity of the prescribed extracting solvent, combining the filtrates, to produce 1000 mL of tincture, and mix.

GENERAL PHARMACOPEIAL REQUIREMENTS

Unless otherwise specified in the individual monographs, Pharmacopeial requirements for the tinctures are as follows.

Packaging and Storage—Store in tight, light-resistant containers, and avoid exposure to direct sunlight and excessive heat. [NOTE—See *Preservation, Packaging, Storage, and Labeling* under *General Notices and Requirements*.]

Labeling—Label it to indicate the name of the plant part used for preparation; the name of the solvent or solvent mixture used for extraction; and the content of the constituents of interest and the ratio of starting material to final product.

⟨571⟩ VITAMIN A ASSAY

ASSAY

Chemical Methods

- **PROCEDURE 1**

The following procedure is provided for the determination of vitamin A in dietary ingredients or pharmaceutical ingredients. It conforms to the procedure that was adopted in 1956 for international use by the International Union of Pure and Applied Chemistry.

Complete the assay promptly, and exercise care throughout the procedure to keep to a minimum the exposure to actinic light and to atmospheric oxygen and other oxidizing agents, preferably by the use of low-actinic glassware and an atmosphere of an inert gas.

For the test articles that contain tocopherol, an appropriate chromatographic method should be used.

Sample solution: Accurately weigh, count, or measure a portion of the test specimen expected to contain the equivalent of NLT 0.15 mg of retinol but containing NMT 1 g of fat. If in the form of capsules, tablets, or other solid, so that it cannot be saponified efficiently by the ensuing instructions, reflux the portion taken in 10 mL of water on a steam bath for about 10 min, crush the remaining solid with a blunt glass rod, and warm for about 5 min longer.

Transfer to a suitable borosilicate glass flask, and add 30 mL of alcohol, followed by 3 mL of potassium hydroxide solution (9 in 10). Reflux in an all-borosilicate glass apparatus for 30 min. Cool the solution, add 30 mL of water, and transfer to a conical separator. Add 4 g of finely powdered sodium sulfate decahydrate. Extract by shaking with one 150-mL portion of ether for 2 min, and then, if an emulsion forms, with three 25-mL portions of ether. Combine the ether extracts, if necessary, and wash by swirling gently with 50 mL of water. Repeat the washing more vigorously with three additional 50-mL portions of water. Transfer the washed ether extract to a 250-mL volumetric flask, add ether to volume, and mix. Evaporate a 25.0-mL portion of the ether extract to about 5 mL. *Without applying heat and with the aid of a stream of inert gas or vacuum,* continue the evaporation to about 3 mL. Dissolve the residue in sufficient isopropyl alcohol to give an expected concentration of the equivalent of 3 µg–5 µg of vitamin A per mL or to give an absorbance in the range 0.5–0.8 at 325 nm.

Instrumental conditions

(See *Ultraviolet-Visible Spectroscopy* ⟨857⟩.)

Mode: UV

Analytical wavelengths: 310, 325, and 334 nm

Cell: 1 cm

Blank: Isopropyl alcohol

Analysis

Sample: *Sample solution*

Determine the absorbances of the *Sample solution* at 310, 325, and 334 nm. Calculate the vitamin A, as retinol ($C_{20}H_{30}O$) content, in mg, in the portion of sample taken, using one of the following formulas:

$$\text{Result} = (0.549 \times A_{325})/(L \times C)$$

or

$$\text{Result} = (0.549 \times [A_{325}])/(L \times C)$$

L = length of the absorption cell (cm)

C = concentration in the final isopropyl alcohol solution of test specimen (g/100 mL) or capsules or tablets (units/100 mL)

$[A_{325}]$ = *corrected* absorbance at 325 nm, calculated:

$$\text{Result} = (6.815 \times A_{325}) - (2.555 \times A_{310}) - (4.260 \times A_{334})$$

Each mg of vitamin A, as retinol ($C_{20}H_{30}O$), represents 3333 USP Units of vitamin A.

Use the first formula when A_{325}, the observed absorbance at 325 nm, is between $[A_{325}]/1.030$ and $[A_{325}]/0.970$. Use the second formula when $[A_{325}]$ has a value less than $A_{325}/1.030$.

[NOTE—The range of the limits of error for this analytical procedure, indicating the extent of discrepancy to be expected in the results of different laboratories at $P = 0.05$, is approximately ±8%.]

• **PROCEDURE 2**

This procedure is used for dietary ingredients or pharmaceutical ingredients in the form of pure retinyl esters or prepared from pure retinyl esters into a vehicle excipient.

Sample solution: Dissolve 25–100 mg, accurately weighed, in 5 mL of pentane, and dilute with isopropyl alcohol to give an expected concentration of the equivalent of 3–4.5 µg/mL of retinol.

Instrumental conditions

(See *Ultraviolet-Visible Spectroscopy* ⟨857⟩.)

Mode: UV

Analytical wavelength: 326 nm

Cell: 1 cm

Blank: Isopropyl alcohol

Analysis

Sample: *Sample solution*

Calculate the vitamin A, as retinol ($C_{20}H_{30}O$) content, in mg, in the portion of sample taken. Each mg of vitamin A, as retinol ($C_{20}H_{30}O$), represents 3333 USP Units of vitamin A.:

$$\text{Result} = (0.570 \times A_{326})/(L \times C)$$

A_{326} = absorbance at 326 nm

L = length of the absorption cell (cm)

C = concentration of the *Sample solution* (g/100 mL)

Chromatographic Methods

The following liquid chromatographic procedures are provided for the determination of vitamin A as an active pharmaceutical ingredient, a dietary supplement ingredient, or a component in the dietary supplements or pharmaceutical dosage forms.

General Chapters

Throughout these procedures, protect solutions containing and derived from the test specimen and the Reference Standards from the atmosphere and light, preferably by the use of a blanket of inert gas and low-actinic glassware.

Where an ester form of vitamin A (retinyl acetate or retinyl palmitate) is specified in the following procedure, use the chemical form present in the formulation and the relevant USP Reference Standard.

• **PROCEDURE 1**

This is a neutral procedure that involves either simply dissolving the sample directly into hexane and injecting into the liquid chromatograph or sample extraction by first dissolving the sample in dimethyl sulfoxide, followed by a liquid–liquid extraction of the vitamin A with hexane. Although its chromatographic system can separate the 13-*cis* and all-*trans*-isomers of vitamin A, only the all-*trans*-isomer peak is used for the quantitation of vitamin A. The procedure can be used to determine vitamin A in raw material, Oil-Soluble Vitamins Tablets, Oil-Soluble Vitamins Capsules, Oil- and Water-Soluble Vitamins Tablets, Oil- and Water-Soluble Vitamins Capsules, Oil- and Water-Soluble Vitamins with Minerals Tablets, and Oil- and Water-Soluble Vitamins with Minerals Capsules.

Unless specified in the individual monographs, the *Standard solutions, Sample solutions*, and *System suitability solution* are prepared as follows.

Mobile phase: *n*-Hexane

Standard solution 1: 15 µg/mL of retinol[1] from USP Retinyl Acetate RS in *n*-hexane

Standard solution 2: 15 µg/mL of retinol[2] from USP Retinyl Palmitate RS in *n*-hexane

System suitability solution: Mix equal volumes of *Standard solution 1* and *Standard solution 2*.

Sample solution for raw materials: Transfer retinyl acetate or retinyl palmitate, accurately weighted, equivalent to 15 mg of retinol, to a 100-mL volumetric flask, dissolve in and dilute with *n*-hexane to volume, and mix. Pipet 5.0 mL of this solution into a 50-mL volumetric flask, dilute with *n*-hexane to volume, and mix.

Sample solution for tablets: Finely powder NLT 20 Tablets. Transfer a portion of the powder, not exceeding 7.5 g, equivalent to NLT 1 mg of vitamin A, as retinol ($C_{20}H_{30}O$), to a centrifuge tube having a polytef-lined screw cap. Add about 2 mL of dimethyl sulfoxide and about 3 mL of *n*-hexane per each g of powdered Tablets, and shake for 45 min on a shaker in a water bath maintained at 60°. [NOTE—Set up the shaker to ensure that the contents of the container are mixed vigorously and thoroughly.] Centrifuge at 3000 rpm for 10 min, and transfer the hexane layer by means of a pipet to a volumetric flask. Add 3 mL of *n*-hexane per each g of powdered Tablets to the dimethyl sulfoxide layer, shake thoroughly for 5 min, and transfer the hexane layer by means of a pipet to the same volumetric flask. Repeat this extraction with three additional portions of *n*-hexane. Dilute the extracts in the volumetric flask with *n*-hexane to volume. Dilute a volume of this solution with *n*-hexane to obtain a solution having a nominal concentration of 15 µg/mL of vitamin A, as retinol ($C_{20}H_{30}O$). [NOTE—Dilution may not be necessary.]

Sample solution for capsules: Transfer the contents of NLT 20 Capsules to a suitable container, mix, and weigh. Transfer a portion of the mixture, not exceeding 7.5 g equivalent to NLT 1 mg of vitamin A, as retinol ($C_{20}H_{30}O$), to a centrifuge tube having a polytef-lined screw cap. [NOTE—For hard gelatin Capsules, remove, as completely as possible, the contents of NLT 20 Capsules by cutting open the Capsule shells, transferring the shells and their contents to a suitable container, and triturating to a homogeneous mass. Transfer a portion of the mass, equivalent to NLT 1 mg of vitamin A, as retinol ($C_{20}H_{30}O$), to a centrifuge tube having a polytef-lined screw cap.] Add about 2 mL of dimethyl sulfoxide and about 3 mL of *n*-hexane per each g of Capsule contents, and shake for 45 min on a shaker in a water bath maintained at 60°. [NOTE—Set up the shaker to ensure that the contents of the container are mixed vigorously and thoroughly.] Centrifuge at 3000 rpm for 10 min, and transfer the hexane layer by means of a pipet to a volumetric flask. Add 3 mL of *n*-hexane per each g of Capsule contents to the dimethyl sulfoxide layer, shake thoroughly for 5 min, and transfer the hexane layer by means of a pipet to the same volumetric flask. Repeat this extraction with three additional portions of *n*-hexane. Dilute the extracts in the volumetric flask with *n*-hexane to volume. Dilute a volume of this solution with *n*-hexane to obtain a solution with a concentration of 15 µg/mL of vitamin A, as retinol ($C_{20}H_{30}O$). [NOTE—Dilution may not be necessary.]

Chromatographic system

(See *Chromatography* ⟨621⟩, *System Suitability*.)

Mode: LC

Detector: UV 325 nm

Column: 4.6-mm × 15-cm; 3-µm packing L8

Flow rate: 1 mL/min

Injection volume: 40 µL

System suitability

Samples: *System suitability solution* and *Standard solution 1* or *Standard solution 2*

Suitability requirements

Resolution: NLT 10 between all-*trans*-retinyl acetate and all-*trans*-retinyl palmitate, *System suitability solution*

Relative standard deviation: NMT 3.0%, *Standard solution 1* or *Standard solution 2*

Analysis

Samples: *Standard solution 1* or *Standard solution 2* and appropriate *Sample solution*

[1] Use the value of 0.872 to convert retinyl acetate to its retinol equivalent.

[2] Use the value of 0.546 to convert retinyl palmitate to its retinol equivalent.

Calculate the percentage of the labeled amount of vitamin A, as retinol ($C_{20}H_{30}O$), in the portion of sample taken:

$$\text{Result} = (r_U/r_S) \times (C_S/C_U) \times 100$$

r_U = peak response of all-*trans* retinyl ester from the appropriate *Sample solution*
r_S = peak response of all-*trans* retinyl ester from *Standard solution 1* or *Standard solution 2*
C_S = concentration of retinol ($C_{20}H_{30}O$) in *Standard solution 1* or *Standard solution 2* (µg/mL)
C_U = concentration of vitamin A, as retinol ($C_{20}H_{30}O$), in the *Sample solution* (µg/mL)

• **PROCEDURE 2**

This procedure involves the treatment of sample with methanolic sulfuric acid, followed by extraction with 2,2,4-trimethylpentane. Sample preparation can be used for the formulation containing vitamins A, D, and E. Application includes Oil-Soluble Vitamins Tablets, Oil-Soluble Vitamins Capsules, Oil- and Water-Soluble Vitamins Tablets, Oil- and Water-Soluble Vitamins Capsules, Oil- and Water-Soluble Vitamins with Minerals Tablets, and Oil- and Water-Soluble Vitamins with Minerals Capsules.

Unless specified in the individual monographs, the *Standard solutions, Sample solutions, System suitability solution,* and reagent solutions are prepared as follows.

Mobile phase: *n*-Hexane and ethyl acetate (99.7: 0.3)

3 N methanolic sulfuric acid solution: Cautiously add 9 mL of sulfuric acid to 80 mL of methanol in a 100-mL volumetric flask. Cool, and dilute with methanol to volume.

Sodium ascorbate–pyrogallol solution: Transfer 10 g of sodium ascorbate and 5 g of pyrogallol to a 100-mL volumetric flask, and add sufficient water to dissolve. Add 1.7 mL of sulfuric acid, and dilute with water to volume.

Lecithin solution: 5 mg/mL of lecithin in 2,2,4-trimethylpentane

Standard solution 1: 15 µg/mL of retinol[1] from USP Retinyl Acetate RS in 2,2,4-trimethylpentane

Standard solution 2: 15 µg/mL of retinol[2] from USP Retinyl Palmitate RS in 2,2,4-trimethylpentane

System suitability solution: Mix equal volumes of *Standard solution 1* and *Standard solution 2.*

Sample solution for tablets: [NOTE—This preparation is suitable for the determination of vitamin A, vitamin D, and vitamin E when present in the formulation. The sample amount may be adjusted depending on the presence or absence of the appropriate vitamins.] Finely powder NLT 20 Tablets. Use a portion of the powder nominally equivalent to an amount between 0.4 mg and 2.5 mg of retinol. Add 0.5 g of sodium bicarbonate, 1.5 mL of *Lecithin solution,* and 12.5 mL of 2,2,4-trimethylpentane, and disperse on a vortex mixer. Add 6 mL of *Sodium ascorbate–pyrogallol solution,* shake slowly, and allow the solution to degas. Continue shaking until the evolution of gas has ceased, and then shake for an additional 12 min. Add 6 mL of dimethyl sulfoxide, mix on a vortex mixer to form a suspension, and shake for 12 min. Add 6 mL of *3 N methanolic sulfuric acid solution,* mix on a vortex mixer to form a suspension, and shake for 12 min. Add 12.5 mL of 2,2,4-trimethylpentane, mix on a vortex mixer to form a suspension, and shake for 10 min. Centrifuge for 10 min to break up the emulsion and to clarify the supernatant. If necessary, quantitatively dilute a volume of the supernatant with 2,2,4-trimethylpentane to obtain a concentration close to that of the *Standard solution.*

Sample solution for capsules: [NOTE—This preparation is suitable for the determination of vitamin A, vitamin D, and vitamin E when present in the formulation. The sample amount may be adjusted depending on the presence or absence of the appropriate vitamins.] Weigh NLT 20 Capsules in a tared weighing bottle. Using a sharp blade if necessary, carefully open the Capsules, without loss of shell material, and transfer the contents to a 100-mL beaker. Remove any contents adhering to the empty shells by washing with several portions of ether. Discard the washings, and dry the Capsule shells with the aid of a current of dry air. Weigh the empty Capsule shells in the tared weighing bottle, and calculate the net weight of the Capsule contents. Transfer a portion of the Capsule contents, equivalent to 2.5 mg of the labeled amount of vitamin A, as retinol. Add 0.5 g of sodium bicarbonate, 1.5 mL of *Lecithin solution,* and 12.5 mL of 2,2,4-trimethylpentane, and disperse on a vortex mixer. Add 6 mL of *Sodium ascorbate–pyrogallol solution,* shake slowly, and allow the solution to degas. Continue shaking until the evolution of gas has ceased, and then shake for an additional 12 min. Add 6 mL of dimethyl sulfoxide, mix on a vortex mixer to form a suspension, and shake for 12 min. Add 6 mL of *3 N methanolic sulfuric acid solution,* mix on a vortex mixer to form a suspension, and shake for 12 min. Add 12.5 mL of 2,2,4-trimethylpentane, mix on a vortex mixer to form a suspension, and shake for 10 min. Centrifuge for 10 min to break up the emulsion and to clarify the supernatant. If necessary, quantitatively dilute a volume of the supernatant with 2,2,4-trimethylpentane to obtain a concentration close to that of the *Standard solution.*

Chromatographic system

(See *Chromatography* ⟨621⟩, *System Suitability.*)

Mode: LC

Detector: UV 325 nm

Column: 4.6-mm × 25-cm; 5-µm packing L24

Flow rate: 1.5 mL/min

Injection volume: 40 µL

System suitability

Sample: *System suitability solution*

Suitability requirements

Resolution: NLT 8.0 between all-*trans* retinyl acetate and all-*trans* retinyl palmitate

General Chapters

Relative standard deviation: NMT 3.0%

Analysis

Samples: *Standard solution 1* or *Standard solution 2* and *Sample solution*

Calculate the percentage of the labeled amount of vitamin A, as retinol ($C_{20}H_{30}O$), in the portion of sample taken:

$$\text{Result} = (r_U/r_S) \times (C_S/C_U) \times 100$$

r_U = peak response of all-*trans* retinyl ester from the *Sample solution*
r_S = peak response of the all-*trans* retinyl ester from *Standard solution 1* or *Standard solution 2*
C_S = concentration of retinol ($C_{20}H_{30}O$) in *Standard solution 1* or *Standard solution 2* (µg/mL)
C_U = nominal concentration of vitamin A, as retinol ($C_{20}H_{30}O$), in the *Sample solution* (µg/mL). [NOTE—Use 26.5 mL as the final volume of the *Sample solution* to calculate the nominal concentration.]

• **PROCEDURE 3**

This procedure involves the saponification of both the standard and sample, followed by a liquid–liquid extraction of vitamin A from the sample with a mixture of *n*-hexane and methylene chloride (3:1). The 13-*cis*- and all-*trans*- isomers of vitamin A can be characterized and quantitated. The procedure can be used for Oil-Soluble Vitamins Tablets, Oil-Soluble Vitamins Capsules, Oil- and Water-Soluble Vitamins Tablets, Oil- and Water-Soluble Vitamins Capsules, Oil- and Water-Soluble Vitamins with Minerals Tablets, and Oil- and Water-Soluble Vitamins with Minerals Capsules.

Unless specified in the individual monographs, the *Standard solution, Sample solutions*, and reagent solutions are prepared as follows.

Mobile phase: *n*-Hexane and isopropyl alcohol (92:8)

Extraction solvent: *n*-Hexane and methylene chloride (3:1)

Potassium hydroxide solution: 800 mg/mL of potassium hydroxide in water. [NOTE—Cautiously add potassium hydroxide in water. Mix, and cool.]

Diluent: 10 mg/mL of pyrogallol in alcohol

Standard solution: Dilute USP Retinyl Acetate RS or USP Retinyl Palmitate RS with *Diluent* to obtain a concentration of 8.5 µg/mL of retinol[1,2] ($C_{20}H_{30}O$). Transfer 10.0 mL of this solution to a stoppered 125-mL flask, and add 5 mL of water, 5 mL of *Diluent*, and 3 mL of *Potassium hydroxide solution*. Insert the stopper tightly, shake for 15 min over a water bath maintained at 60 ± 5°, and cool to room temperature. Add 7 mL of water and 25.0 mL of *Extraction solvent*. Insert the stopper tightly, and shake vigorously for 60 s. Rinse the sides of the flask with 60 mL of water, and allow to stand for 10 min until the layers separate. Withdraw a portion of the organic layer for injection into the chromatograph. This *Standard solution* contains 3.4 µg/mL of retinol.

Sample solution for capsules: Weigh NLT 20 Capsules in a tared weighing bottle. Open the Capsules, without loss of shell material, and transfer the contents to a 100-mL beaker. Remove any contents adhering to the empty shells by washing with several portions of ether. Discard the washings, and dry the Capsule shells with the aid of a current of dry air. Weigh the empty Capsule shells in the tared weighing bottle, and calculate the net weight of the Capsule contents. Transfer a portion of the Capsule contents, equivalent to 1.3 mg of retinol, to a stoppered 125-mL flask. Add 5 mL of water, 15 mL of *Diluent*, and 3 mL of *Potassium hydroxide solution*. Insert the stopper tightly, shake for 15 min over a water bath maintained at 60 ± 5°, and cool to room temperature. Add 7 mL of water and 25.0 mL of *Extraction solvent*. Insert the stopper tightly, and shake vigorously for 60 s or longer, if necessary, for complete extraction. Rinse the sides of the flask with 60 mL of water, and allow to stand for 10 min until the layers separate. [NOTE—Do not shake, because an emulsion may form.] Withdraw a portion of the organic layer, and dilute quantitatively and stepwise if necessary, with *Extraction solvent*, to obtain a concentration of 3.4 µg/mL of retinol.

Sample solution for tablets: Finely powder a counted number of Tablets. Transfer a portion of the powder, equivalent to 1.3 mg of retinol, to a stoppered 125-mL flask. Add 5 mL of water, 15 mL of *Diluent*, and 3 mL of *Potassium hydroxide solution*. Insert the stopper tightly, shake for 15 min over a water bath maintained at 60 ± 5°, and cool to room temperature. Add 7 mL of water and 25.0 mL of *Extraction solvent*. Insert the stopper tightly, and shake vigorously for 60 s or longer, if necessary, for complete extraction. Rinse the sides of the flask with 60 mL of water, and allow to stand for 10 min until the layers separate. [NOTE—Do not shake, because an emulsion may form.] Withdraw a portion of the organic layer, and dilute with *Extraction solvent* to obtain a concentration of 3.4 µg/mL of retinol.

Chromatographic system

(See *Chromatography* ⟨621⟩, *System Suitability*.)

Mode: LC

Detector: UV 335 nm

Column: 6.2-mm × 8-cm; packing L3

Column temperature: 40°

Flow rate: 4 mL/min

Injection volume: 50 µL

System suitability

Sample: *Standard solution*

Suitability requirements

Relative standard deviation: NMT 3.0%

Analysis

Samples: *Standard solution* and *Sample solution*

Calculate the percentage of the labeled amount of vitamin A, as retinol ($C_{20}H_{30}O$), in the portion of sample taken:

$$\text{Result} = (r_{T1}/r_{T2}) \times (C_S/C_U) \times 100$$

r_{T1} = sum of peak responses of all-*trans* retinyl ester and 13-*cis*-retinyl ester peaks from the *Sample solution*
r_{T2} = sum of peak responses of all-*trans* retinyl ester and 13-*cis*-retinyl ester peaks from the *Standard solution*
C_S = concentration of retinol ($C_{20}H_{30}O$) in the *Standard solution* (µg/mL)
C_U = nominal concentration of vitamin A, as retinol ($C_{20}H_{30}O$), in the *Sample solution* (µg/mL)

• **Procedure 4**

This procedure involves a liquid–liquid extraction of vitamin A from the sample with hexane, followed by the evaporation of hexane and reconstitution of the residue in tetrahydrofuran and acetonitrile mixture (1:1). It can be used for the determination of vitamin A in Oil- and Water-Soluble Vitamins Oral Solution and Oil- and Water-Soluble Vitamins with Minerals Oral Solution.

Unless specified in the individual monographs, the *Standard solution*, *Sample solution*, and *Diluent* are prepared as follows.

Mobile phase: Methanol, acetonitrile, and *n*-hexane (46.5: 46.5: 7.0)

Diluent: Tetrahydrofuran and acetonitrile (1:1)

Standard solution: 0.33 mg/mL of retinol[1,2] ($C_{20}H_{30}O$) from USP Retinyl Acetate RS or USP Retinyl Palmitate RS in *Diluent*

Sample solution for liquid dosage forms: Transfer an accurately measured volume of Oral Solution, equivalent to 3.3 mg of retinol, to a 500-mL separatory funnel containing 10 mL of water and 20 mL of dehydrated alcohol. Add 150 mL of solvent hexane, insert the stopper, and shake for 1 min. Add another 150 mL of solvent hexane, insert the stopper, shake, and allow the layers to separate. Discard the aqueous layer, and filter the solvent hexane extract through anhydrous sodium sulfate into a 500-mL, round-bottom flask. Evaporate the solution to dryness with the aid of a rotary evaporator over a water bath maintained at about 65°. Immediately add 10.0 mL of *Diluent*, swirl to dissolve the residue, and filter.

Chromatographic system

(See *Chromatography* ⟨621⟩, *System Suitability*.)

Mode: LC

Detector: UV 265 nm

Column: 4.6-mm × 50-cm (prepared from two concatenated 4.6-mm × 25-cm columns); packing L1

Column temperature: 40°

Flow rate: 1.5 mL/min

Injection volume: 20 µL

System suitability

Sample: *Standard solution*

Suitability requirements

Relative standard deviation: NMT 5.0%

Analysis

Samples: *Standard solution* and *Sample solution*

Calculate the percentage of the labeled amount of vitamin A, as retinol ($C_{20}H_{30}O$), in the portion of sample taken:

$$\text{Result} = (r_U/r_S) \times (C_S/C_U) \times 100$$

r_U = peak response of all-*trans* retinyl ester from the *Sample solution*
r_S = peak response of all-*trans* retinyl ester from the *Standard solution*
C_S = concentration of retinol ($C_{20}H_{30}O$) in the *Standard solution* (µg/mL)
C_U = nominal concentration of vitamin A, as retinol ($C_{20}H_{30}O$), in the *Sample solution* (µg/mL)

ADDITIONAL REQUIREMENTS

• **USP Reference Standards** ⟨11⟩

USP Retinyl Acetate RS
USP Retinyl Palmitate RS

⟨580⟩ VITAMIN C ASSAY

INTRODUCTION

The following procedures are provided for analysis of different forms of vitamin C as ascorbic acid ($C_6H_8O_6$), sodium ascorbate ($C_6H_7NaO_6$), and calcium ascorbate dihydrate ($C_{12}H_{14}CaO_{12} \cdot 2H_2O$) or their mixtures in finished dosage forms, as Capsules, Tablets, or Oral Solutions.

METHOD I—TITRIMETRIC METHOD

• **PROCEDURE**

Unless specified in the individual monographs, proceed as follows.

Sample solution for Capsules: Weigh NLT 20 Capsules in a tared weighing bottle. Open the Capsules, without the loss of shell material, and transfer the contents to a 100-mL beaker. Remove any contents adhering to the empty shells by washing, if necessary, with several portions of ether. Discard the washings, and dry the Capsule shells with the aid of a current of dry air until the odor of ether is no longer perceptible. Weigh the empty Capsule shells in the tared weighing bottle, and calculate the average net weight per Capsule. Transfer a portion of the Capsule contents, equivalent to 100 mg of ascorbic acid, to a 200-mL volumetric flask, and add 75 mL of metaphosphoric–acetic acids TS. Insert a stopper into the flask, and shake by mechanical means for 30 min. Dilute with water to volume.

Sample solution for Oral Solutions: Transfer a volume of Oral Solution equivalent to 50 mg of ascorbic acid, previously diluted with water if necessary, to a 100-mL volumetric flask. Add 20 mL of metaphosphoric–acetic acid TS, dilute with water to volume, and mix.

Sample solution for Tablets: Finely powder NLT 20 Tablets. Transfer a portion of the powder, equivalent of 100 mg of ascorbic acid, to a 200-mL volumetric flask, and add 75 mL of metaphosphoric–acetic acids TS. Insert a stopper into the flask, and shake by mechanical means for 30 min. Dilute with water to volume.

Blank: A mixture of 5.5 mL of metaphosphoric–acetic acids TS and 15 mL of water.

Titrimetric system

(See *Titrimetry* 〈541〉.)

Mode: Direct titration

Titrant: Standard dichlorophenol–indophenol solution VS

Endpoint detection: Visual

Analysis: Transfer a portion of the *Sample solution* to a centrifuge tube, and centrifuge until a clear supernatant is obtained. Transfer a volume of the *Sample solution*, equivalent to 2 mg of ascorbic acid into a 50-mL conical flask, and add 5 mL of metaphosphoric–acetic acids TS. Titrate with *Titrant* to a rose-pink color that persists for at least 5 s. Correct for the volume of *Titrant* consumed by the *Blank*.

Calculate the percentage of ascorbic acid ($C_6H_8O_6$) in the portion of sample taken:

$$\text{Result} = \{[(V_S - V_B) \times F]/W\} \times 100$$

V_S = *Titrant* volume consumed by the *Sample solution* (mL)
V_B = *Titrant* volume consumed by the *Blank*
F = concentration of *Titrant* in terms of its equivalent of ascorbic acid (mg/mL)
W = nominal amount of ascorbic acid taken for *Analysis* (mg)

METHOD II—CHROMATOGRAPHIC METHOD

• **PROCEDURE 1**

Unless specified in the individual monographs, the *Diluent*, *Standard solution*, and *Sample solutions* are prepared as follows.

[NOTE—Protect samples from air, light, and heat.]

Buffer: 2.04 g/L of monobasic potassium phosphate in water. Adjust with phosphoric acid to a pH of 3.0.

Mobile phase: *Buffer*

Diluent: 0.56 g of edetate disodium dihydrate and 2.04 g of monobasic potassium phosphate per 1000 mL of water. Adjust with phosphoric acid to a pH of 3.0.

Standard solution: 0.25 mg/mL of USP Ascorbic Acid RS in *Diluent*

Sample solution for Capsules: Weigh NLT 20 Capsules in a tared weighing bottle. Open the Capsules, without the loss of shell material, and transfer the contents to a 100-mL beaker. Remove any contents adhering to the empty shells by washing, if necessary, with several portions of ether. Discard the washings, and dry the Capsule shells with the aid of a current of dry air until the odor of ether is no longer perceptible. Weigh the empty Capsule shells in the tared weighing bottle, and calculate the average net weight per Capsule. Transfer a portion of the Capsule contents, equivalent to about 25 mg of ascorbic acid, into a 100-mL volumetric flask. Add 60 mL of *Diluent*, shake mechanically for 15 min, dilute with *Diluent* to volume, mix well, and pass through a membrane filter of 0.45-µm pore size, discarding the first 4 mL.

Sample solution for Oral Solutions: Dilute an accurately measured volume of Oral Solution with *Diluent* to obtain a solution with a concentration of 0.25 mg/mL of ascorbic acid. Mix carefully.

Sample solution for Tablets: Transfer a portion from NLT 20 finely powdered Tablets, nominally equivalent to about 25 mg of ascorbic acid, into a 100-mL volumetric flask. Add 60 mL of *Diluent*, shake mechanically for 15 min, dilute with *Diluent* to volume, mix well, and pass through a membrane filter of 0.45-µm pore size, discarding the first 4 mL.

Chromatographic system

(See *Chromatography* 〈621〉, *System Suitability*.)

Mode: LC

Detector: UV 245 nm

Column: 4.6-mm × 25-cm; 5-µm packing L1

Flow rate: 1.0 mL/min
Injection volume: 5 µL
System suitability
Sample: *Standard solution*
Suitability requirements
Relative standard deviation: NMT 2.0%
Analysis
Samples: *Standard solution* and *Sample solution*
Calculate the percentage of vitamin C, as ascorbic acid ($C_6H_8O_6$), in the portion of sample taken:

$$\text{Result} = (r_U/r_S) \times (C_S/C_U) \times 100$$

r_U = peak area of ascorbic acid from the *Sample solution*
r_S = peak area of ascorbic acid from the *Standard solution*
C_S = concentration of USP Ascorbic Acid RS in the *Standard solution* (mg/mL)
C_U = nominal concentration of ascorbic acid in the *Sample solution* (mg/mL)

• **PROCEDURE 2**

Unless specified in the individual monographs, the *Diluent*, *Standard solution*, and *Sample solutions* are prepared as follows.

[NOTE—Protect samples from air, light, and heat. All prepared samples must be analyzed within 4 h.]

Buffer: 7.8 g/L of sodium dihydrogen phosphate dihydrate in water. Adjust with phosphoric acid to a pH of 2.5.
Mobile phase: *Buffer* and methanol. See *Table 1* for gradient.

Table 1

Time (min)	Buffer (%)	Methanol (%)
0	100	0
3	100	0
5	0	100
6	50	50
7	100	0
10	100	0

Diluent: Dissolve 73 g of metaphosphoric acid in 800 mL of water, add 84 mL of glacial acetic acid, and dilute with water to 1000 mL.
Standard stock solution: 1 mg/mL of USP Ascorbic Acid RS in *Diluent*. [NOTE—Sonicate with intermittent shaking to help dissolve, if necessary. Prepare fresh every time.]
Standard solution: Dilute *Standard stock solution* with *Diluent* to obtain a solution containing 0.05 mg/mL of USP Ascorbic Acid RS.
Sample solution for Capsules: Weigh NLT 20 Capsules in a tared weighing bottle. Open the Capsules, without the loss of shell material, and transfer the contents to a 100-mL beaker. Remove any contents adhering to the empty shells by washing, if necessary, with several portions of ether. Discard the washings, and dry the Capsule shells with the aid of a current of dry air until the odor of ether is no longer perceptible. Weigh the empty Capsule shells in the tared weighing bottle, and calculate the average net weight per Capsule. Transfer a portion of the Capsule contents, equivalent to about 25 mg of ascorbic acid, into a 50-mL centrifuge tube. Add 25.0 mL of *Diluent*, sonicate for 15 min, and centrifuge at about 2000 rpm for 5 min. Quantitatively dilute the clear supernatant with *Diluent* to obtain a solution containing 0.05 mg/mL of ascorbic acid. Mix and pass through a membrane filter of 0.45-µm pore size.
Sample solution for Oral Solutions: Dilute an accurately measured volume of Oral Solution with *Diluent* to obtain a solution with a concentration of 0.05 mg/mL of ascorbic acid. Mix carefully.
Sample solution for Tablets: Transfer a portion from NLT 20 ground Tablets, nominally equivalent to about 25 mg of ascorbic acid, into a 50-mL centrifuge tube. Add 25.0 mL of *Diluent*, sonicate for 15 min, and centrifuge at about 2000 rpm for 5 min. Quantitatively dilute the clear supernatant with *Diluent* to obtain a solution containing 0.05 mg/mL of ascorbic acid. Mix and pass through a membrane filter of 0.45-µm pore size.
Chromatographic system
(See *Chromatography* ⟨621⟩, *System Suitability*.)
Mode: LC
Detector: UV 245 nm
Column: 4.6-mm × 15-cm; 3.5-µm packing L7
Flow rate: 0.8 mL/min
Injection volume: 10 µL
System suitability
Sample: *Standard solution*

General Chapters

Suitability requirements

Relative standard deviation: NMT 2.0%

Analysis

Samples: *Standard solution* and *Sample solution*

Calculate the percentage of vitamin C, as ascorbic acid ($C_6H_8O_6$), in the portion of sample taken:

$$\text{Result} = (r_U/r_S) \times (C_S/C_U) \times 100$$

r_U = peak area of ascorbic acid from the *Sample solution*
r_S = peak area of ascorbic acid from the *Standard solution*
C_S = concentration of USP Ascorbic Acid RS in the *Standard solution* (mg/mL)
C_U = nominal concentration of ascorbic acid in the *Sample solution* (mg/mL)

ADDITIONAL REQUIREMENTS

• **USP Reference Standards ⟨11⟩**

USP Ascorbic Acid RS

⟨581⟩ VITAMIN D ASSAY

ASSAY

Chromatographic Methods

The following liquid chromatographic procedures are provided for the determination of vitamin D as an active pharmaceutical ingredient, as a dietary supplement ingredient, or as a component in compendial dosage forms.

Throughout this assay, protect solutions containing, and derived from, the test specimen and the Reference Standard from the atmosphere and light, preferably by the use of a blanket of inert gas and low-actinic glassware.

Where vitamin D (cholecalciferol or ergocalciferol) is specified in the following procedure, use the chemical form present in the formulation and the relevant USP Reference Standard.

• **Procedure 1**

This procedure uses a sample preparation without pH adjustment and involves the use of dimethyl sulfoxide to dissolve the excipients in the sample, followed by a liquid-liquid extraction of the vitamin D with hexane. The chromatographic separation is achieved using normal phase on an L8 column. It can be used to determine vitamin D alone or in combination with other vitamins and minerals in compendial dosage forms.

Unless specified in the individual monographs, the *Standard solution*, *Sample solution*, and *System suitability solution* are prepared as follows.

Mobile phase: *n*-Hexane and isopropyl alcohol (99:1)

Standard solution: 2 µg/mL of USP Cholecalciferol RS or USP Ergocalciferol RS in *n*-hexane

System suitability solution: Heat a volume of the *Standard solution* at 60° for 1 h to partially isomerize vitamin D (cholecalciferol or ergocalciferol) to its corresponding precursor.

Sample solution for tablets: Finely powder NLT 20 Tablets. Transfer a portion of the powder, not exceeding 7.5 g, equivalent to NLT 0.1 mg of vitamin D as cholecalciferol or ergocalciferol, to a centrifuge tube having a polytef-lined screw cap. Add about 2 mL of dimethyl sulfoxide and about 3 mL of *n*-hexane per each g of powdered Tablets, and shake for 45 min on a shaker in a water bath maintained at 60°. [Note—Set up the shaker to ensure that the contents of the container are mixed vigorously and thoroughly in order to achieve accurate recoveries.] Centrifuge at 3000 rpm for 10 min, and transfer the hexane layer by means of a pipet to a volumetric flask. Add 3 mL of *n*-hexane per each g of powdered Tablets to the dimethyl sulfoxide layer, shake thoroughly for 5 min, and transfer the hexane layer by means of a pipet to the same volumetric flask. Repeat this extraction with three additional portions of *n*-hexane. Dilute the extracts in the volumetric flask with *n*-hexane to volume. Dilute a volume of this solution with *n*-hexane to obtain a solution with a concentration of 2 µg/mL of cholecalciferol or ergocalciferol. [Note—Dilution may not be necessary.]

Sample solution for capsules: Transfer the contents of NLT 20 Capsules to a suitable container, mix, and weigh. Transfer a portion of the mixture, not exceeding 7.5 g equivalent to NLT 0.1 mg of vitamin D as cholecalciferol or ergocalciferol, to a centrifuge tube having a polytef-lined screw cap. [Note—For hard gelatin Capsules, remove, as completely as possible, the contents of NLT 20 Capsules by cutting open the Capsule shells, transferring the shells and their contents to a suitable container, and triturating to a homogeneous mass. Transfer a portion of the mass, equivalent to NLT 0.1 mg of vitamin D as cholecalciferol or ergocalciferol, to a centrifuge tube having a polytef-lined screw cap.] Add about 2 mL of dimethyl sulfoxide and about 3 mL of *n*-hexane per each g of Capsule contents, and shake for 45 min on a shaker in a water bath maintained at 60°. [Note—Set up the shaker to ensure that the contents of the container are mixed vigorously and thoroughly in order to achieve accurate recoveries.] Centrifuge at 3000 rpm for 10 min, and transfer the hexane layer by means of a pipet to a volumetric flask. Add 3 mL of *n*-hexane per each g of Capsule contents to the dimethyl sulfoxide layer, shake thoroughly for 5 min, and transfer the hexane layer by means of a pipet to the same volumetric flask. Repeat this extraction with three additional portions of *n*-hexane. Dilute the extracts in the volumetric flask with *n*-hexane to vol-

ume. Dilute a volume of this solution with *n*-hexane to obtain a solution with a concentration of 2 µg/mL of vitamin D as cholecalciferol or ergocalciferol. [NOTE—Dilution may not be necessary.]

Chromatographic system

(See *Chromatography* ⟨621⟩, *System Suitability*.)

Mode: LC

Detector: UV 265 nm

Column: 4.6-mm × 15-cm; 3-µm packing L8

Flow rate: 1 mL/min

Injection volume: 100 µL

System suitability

Samples: *Standard solution* and *System suitability solution*

Suitability requirements

Resolution: NLT 10 between the vitamin D form present and its corresponding precursor, *System suitability solution*

Relative standard deviation: NMT 3.0%, *Standard solution*

Analysis

Samples: *Standard solution* and *Sample solution*

Calculate the percentage of the labeled amount of cholecalciferol ($C_{27}H_{44}O$) or ergocalciferol ($C_{28}H_{44}O$) in the portion of the sample taken:

$$\text{Result} = (r_U/r_S) \times (C_S/C_U) \times F \times 100$$

r_U = peak response of cholecalciferol or ergocalciferol from the *Sample solution*

r_S = peak response of cholecalciferol or ergocalciferol from the *Standard solution*

C_S = concentration of USP Cholecalciferol RS or USP Ergocalciferol RS in the *Standard solution* (µg/mL)

C_U = nominal concentration of cholecalciferol or ergocalciferol in the *Sample solution* (µg/mL)

F = correction factor to account for the average amount of previtamin D present in the *Sample solution*, 1.09

• **PROCEDURE 2**

This procedure involves the treatment of sample with sodium bicarbonate, an antioxidant acid solution generating gas evolution; lecithin as a surfactant; and dimethyl sulfoxide, followed by methanolic sulfuric acid to create a dispersion and efficiently extract vitamin D from the matrix components into the 2,2,4-trimethylpentane phase. Separation is achieved in normal-phase mode on an L24 column. The sample preparation and *Chromatographic system* used in this procedure also are suitable to determine vitamins A and E when present in the formulation; analysts should make corresponding adjustments in sample size and detection wavelength.

Unless specified in the individual monographs, the *Standard solution, Sample solution, System suitability solution*, and reagent solutions are prepared as follows.

Mobile phase: *n*-Hexane and tertiary butyl alcohol (98.75: 1.25)

3 N methanolic sulfuric acid solution: Cautiously add 9 mL of sulfuric acid to 80 mL of methanol in a 100-mL volumetric flask. Cool, and dilute with methanol to volume.

Sodium ascorbate–pyrogallol solution: Transfer 10 g of sodium ascorbate and 5 g of pyrogallol to a 100-mL volumetric flask, and add sufficient water to dissolve. Add 1.7 mL of sulfuric acid, and dilute with water to volume.

Lecithin solution: 5 mg/mL of lecithin in 2,2,4-trimethylpentane

Standard solution: 1 µg/mL of USP Cholecalciferol RS or USP Ergocalciferol RS in 2,2,4-trimethylpentane

System suitability solution: Heat a volume of the *Standard solution* at 60° for 1 h to partially isomerize vitamin D (cholecalciferol or ergocalciferol) to its corresponding precursor.

Sample solution for tablets: [NOTE—This preparation is suitable for the determination of vitamin A, vitamin D, and vitamin E, when present in the formulation. The sample amount may be adjusted depending on the presence or absence of the appropriate vitamins.] Finely powder NLT 20 Tablets. Use a portion of the powder nominally equivalent to an amount NLT 0.1 mg of vitamin D. Add 0.5 g of sodium bicarbonate, 1.5 mL of *Lecithin solution*, and 12.5 mL of 2,2,4-trimethylpentane, and disperse on a vortex mixer. Add 6 mL of *Sodium ascorbate–pyrogallol solution*, shake slowly, and allow the solution to degas. Continue shaking until the evolution of gas has ceased, and then shake for an additional 12 min. Add 6 mL of dimethyl sulfoxide, mix on a vortex mixer to form a suspension, and shake for 12 min. Add 6 mL of *3 N methanolic sulfuric acid solution*, mix on a vortex mixer to form a suspension, and shake for 12 min. Add 12.5 mL of 2,2,4-trimethylpentane, mix on a vortex mixer to form a suspension, and shake for 10 min. Centrifuge for 10 min to break up the emulsion and to clarify the supernatant. If necessary, quantitatively dilute a volume of the supernatant with 2,2,4-trimethylpentane to obtain a concentration close to that of the *Standard solution*.

Sample solution for capsules: [NOTE—This preparation is suitable for the determination of vitamin A, vitamin D, and vitamin E, when present in the formulation. The sample amount may be adjusted depending on the presence or absence of the appropriate vitamins.] Weigh NLT 20 Capsules in a tared weighing bottle. Using a sharp blade if necessary, carefully open the Capsules, without loss of shell material, and transfer the contents to a 100-mL beaker. Remove any contents adhering to the empty shells by washing with several portions of ether. Discard the washings, and dry the Capsule shells with the aid of a current of dry air. Weigh the empty Capsule shells in the tared weighing bottle, and calculate the net weight of the Capsule contents. Transfer a portion of the Capsule contents, equivalent to NLT 0.1 mg of the labeled

amount of vitamin D, as cholecalciferol or ergocalciferol. Add 0.5 g of sodium bicarbonate, 1.5 mL of *Lecithin solution*, and 12.5 mL of 2,2,4-trimethylpentane, and disperse on a vortex mixer. Add 6 mL of *Sodium ascorbate–pyrogallol solution*, shake slowly, and allow the solution to degas. Continue shaking until the evolution of gas has ceased, and then shake for an additional 12 min. Add 6 mL of dimethyl sulfoxide, mix on a vortex mixer to form a suspension, and shake for 12 min. Add 6 mL of *3 N methanolic sulfuric acid solution*, mix on a vortex mixer to form a suspension, and shake for 12 min. Add 12.5 mL of 2,2,4-trimethylpentane, mix on a vortex mixer to form a suspension, and shake for 10 min. Centrifuge for 10 min to break up the emulsion and to clarify the supernatant. If necessary, quantitatively dilute a volume of the supernatant with 2,2,4-trimethylpentane to obtain a concentration close to that of the *Standard solution*.

Chromatographic system

(See *Chromatography* 〈621〉, *System Suitability*.)

Mode: LC

Detector: UV 265 nm

Column: 4.6-mm × 25-cm; 5-µm packing L24

Flow rate: 1 mL/min

Injection volume: 40 µL

System suitability

Samples: *Standard solution* and *System suitability solution*

Suitability requirements

Resolution: NLT 4.0 between the vitamin D form present and its corresponding precursor, *System suitability solution*

Relative standard deviation: NMT 3.0%, *Standard solution*

Analysis

Samples: *Standard solution* and *Sample solution*

Calculate the percentage of the labeled amount of cholecalciferol ($C_{27}H_{44}O$) or ergocalciferol ($C_{28}H_{44}O$) in the portion of the sample taken:

$$\text{Result} = (r_U/r_S) \times (C_S/C_U) \times 100$$

r_U = peak response of cholecalciferol or ergocalciferol from the *Sample solution*

r_S = peak response of cholecalciferol or ergocalciferol from the *Standard solution*

C_S = concentration of USP Cholecalciferol RS or USP Ergocalciferol RS in the *Standard solution* (µg/mL)

C_U = nominal concentration of cholecalciferol or ergocalciferol in the *Sample solution* (µg/mL)

• **Procedure 3**

This procedure is suitable for matrices with excipients that are soluble or degradable in alkaline conditions. It involves the saponification of the sample solution, followed by a liquid–liquid extraction with hexane and clean-up on a solid phase extraction (SPE) using a mixture of methylene chloride and isopropyl alcohol (99.8: 0.2) as eluent. The *Standard solution* undergoes similar treatment to compensate for losses in recovery due to isomerization. The eluate then is evaporated, and the residue is reconstituted in acetonitrile before injection into the chromatograph. Separation is achieved in reversed phase mode.

Unless specified in the individual monographs, the *Standard solution*, *Sample solution*, and reagent solutions are prepared as follows.

Mobile phase: Acetonitrile and methanol (91:9)

Diluted acetic acid: Glacial acetic acid solution (1 in 10) in water

Phenolphthalein solution: 10 mg/mL of phenolphthalein in alcohol

Potassium hydroxide solution: Slowly dissolve 14 g of potassium hydroxide in a mixture of 31 mL of dehydrated alcohol and 5 mL of water. Prepare fresh daily.

Extraction solvent: Methylene chloride and isopropyl alcohol (99.8: 0.2)

Extraction column: Silica packing with a sorbent mass-to-column volume ratio of 500 mg to 2.8 mL or equivalent. [Note—Condition the column by initially washing with 4.0 mL of a mixture of methylene chloride and isopropyl alcohol (4:1), followed by 5.0 mL of the *Extraction solvent*. Do not allow the column to dry.]

Standard stock solution: 0.2 mg/mL of USP Cholecalciferol RS or USP Ergocalciferol RS in dehydrated alcohol. [Note—Prepare fresh every 4 weeks. Store in a freezer.]

Standard solution: Dilute a volume of the *Standard stock solution* with dehydrated alcohol to obtain a concentration of 5 µg/mL of USP Cholecalciferol RS or USP Ergocalciferol RS. Prepare this solution fresh daily. Transfer 2.0 mL of this solution to a stoppered 125-mL flask. Add 15.0 mL of water and 15.0 mL of *Potassium hydroxide solution*, insert the stopper, and shake for 30 min in a water bath maintained at 60°. Allow to cool to room temperature, and transfer the contents of the flask to a 250-mL separatory funnel. Add 15.0 mL of water to the flask, insert the stopper, shake vigorously, and transfer this solution to the separatory funnel. Rinse the flask with 60 mL of *n*-hexane, and transfer the rinsing to the separatory funnel. Insert the stopper, shake vigorously for 90 s, and allow to stand for 15 min until the layers separate. Drain, and discard the aqueous layer. Add 15.0 mL of water to the hexane layer in the separatory funnel, insert the stopper, and shake vigorously. Allow to stand for 10 min until the layers separate, and discard the aqueous layer. Add 1 drop of *Phenolphthalein solution* and 15.0 mL of water to the separatory funnel. Add *Diluted acetic acid* dropwise, with shaking, until the washing is neutral. Allow to stand for 10 min until the layers separate. Drain, and discard the aqueous layer. Filter the

hexane layer through anhydrous sodium sulfate supported by a small pledget of cotton into a 100-mL, round-bottom flask. Rinse the funnel and sodium sulfate with a few mL of *n*-hexane, and collect the rinsings in the same flask. Evaporate the hexane in the flask on a rotary evaporator at 50° to dryness. Immediately add 2.0 mL of the *Extraction solvent* to dissolve the residue. Transfer this solution to a freshly conditioned solid-phase *Extraction column*, rinse the round-bottom flask with 1.0 mL of the *Extraction solvent*, and transfer to the column. Elute the *Extraction column* with 2.0 mL of the *Extraction solvent*, and discard this fraction. Elute the column with 7.0 mL of the *Extraction solvent*, and collect the eluate in a suitable flask. Place the flask in a warm water bath maintained at 42°, and evaporate the solvent with the aid of a stream of nitrogen. Immediately add 2.0 mL of acetonitrile to the residue, and use the solution for injection into the chromatograph.

Sample solution for tablets: Finely powder NLT 20 Tablets. Transfer a portion of the powder, equivalent to 10 µg of cholecalciferol or ergocalciferol, to a stoppered 125-mL flask. Add 15.0 mL of water and 15.0 mL of *Potassium hydroxide solution*, insert the stopper, and shake for 30 min in a water bath maintained at 60°. Allow to cool to room temperature, and transfer the contents of the flask to a 250-mL separatory funnel. Add 15.0 mL of water to the flask, insert the stopper, shake vigorously, and transfer this solution to the separatory funnel. Rinse the flask with 60 mL of *n*-hexane, and transfer the rinsing to the separatory funnel. Insert the stopper, shake vigorously for 90 s, and allow to stand for 15 min until the layers separate. Drain and discard the aqueous layer. Add 15.0 mL of water to the hexane layer in the separatory funnel, insert the stopper, and shake vigorously. Allow to stand for 10 min until the layers separate, and discard the aqueous layer. Add 1 drop of *Phenolphthalein solution* and 15.0 mL of water to the separatory funnel. Add *Diluted acetic acid* dropwise, with shaking, until the washing is neutral. Allow to stand for 10 min until the layers separate. Drain, and discard the aqueous layer. Filter the hexane layer through anhydrous sodium sulfate supported by a small pledget of cotton into a 100-mL, round-bottom flask. Rinse the funnel and sodium sulfate with a few mL of *n*-hexane, and collect the rinsings in the same flask. Evaporate the hexane in the flask on a rotary evaporator at 50° to dryness. Immediately add 2.0 mL of the *Extraction solvent* to dissolve the residue. Transfer this solution to a freshly conditioned solid-phase *Extraction column*, rinse the round-bottom flask with 1.0 mL of the *Extraction solvent*, and transfer to the column. Elute the *Extraction column* with 2.0 mL of the *Extraction solvent*, and discard this fraction. Elute the column with 7.0 mL of the *Extraction solvent*, and collect the eluate in a suitable flask. Place the flask in a warm water bath maintained at 42°, and evaporate the solvent with the aid of a stream of nitrogen. Immediately add 2.0 mL of acetonitrile to the residue, and use the solution for injection into the chromatograph.

Sample solution for capsules: Weigh NLT 20 Capsules in a tared weighing bottle. Open the Capsules, without loss of shell material, and transfer the contents to a 100-mL beaker. Remove any contents adhering to the empty shells by washing with several portions of ether. Discard the washings, and dry the Capsule shells with the aid of a current of dry air. Weigh the empty Capsule shells in the tared weighing bottle, and calculate the net weight of the Capsule contents. Transfer a portion of the Capsule contents, equivalent to 10 µg of ergocalciferol or cholecalciferol, to a stoppered 125-mL flask. Add 15.0 mL of water and 15.0 mL of *Potassium hydroxide solution*, insert the stopper, and shake for 30 min in a water bath maintained at 60°. Allow to cool to room temperature, and transfer the contents of the flask to a 250-mL separatory funnel. Add 15.0 mL of water to the flask, insert the stopper, shake vigorously, and transfer this solution to the separatory funnel. Rinse the flask with 60 mL of *n*-hexane, and transfer the rinsing to the separatory funnel. Insert the stopper, shake vigorously for 90 s, and allow to stand for 15 min until the layers separate. Drain, and discard the aqueous layer. Add 15.0 mL of water to the hexane layer in the separatory funnel, insert the stopper, and shake vigorously. Allow to stand for 10 min until the layers separate, and discard the aqueous layer. Add 1 drop of *Phenolphthalein solution* and 15.0 mL of water to the separatory funnel. Add *Diluted acetic acid* dropwise, with shaking, until the washing is neutral. Allow to stand for 10 min until the layers separate. Drain, and discard the aqueous layer. Filter the hexane layer through anhydrous sodium sulfate supported by a small pledget of cotton into a 100-mL, round-bottom flask. Rinse the funnel and sodium sulfate with a few mL of *n*-hexane, and collect the rinsings in the same flask. Evaporate the hexane in the flask on a rotary evaporator at 50° to dryness. Immediately add 2.0 mL of the *Extraction solvent* to dissolve the residue. Transfer this solution to a freshly conditioned solid-phase *Extraction column*, rinse the round-bottom flask with 1.0 mL of the *Extraction solvent*, and transfer to the column. Elute the *Extraction column* with 2.0 mL of the *Extraction solvent*, and discard this fraction. Elute the column with 7.0 mL of the *Extraction solvent*, and collect the eluate in a suitable flask. Place the flask in a warm water bath maintained at 42°, and evaporate the solvent with the aid of a stream of nitrogen. Immediately add 2.0 mL of acetonitrile to the residue, and use the solution for injection into the chromatograph.

Chromatographic system

(See *Chromatography* ⟨621⟩, *System Suitability*.)

Mode: LC

Detector: UV 265 nm

Column: 4.6-mm × 25-cm; 5-µm packing L1

Column temperature: 27°

Flow rate: 0.7 mL/min

Injection volume: 15 µL

System suitability

Sample: *Standard solution*

General Chapters

Suitability requirements

Relative standard deviation: NMT 4.0%

Analysis

Samples: *Standard solution* and *Sample solution*

Calculate the percentage of the labeled amount of cholecalciferol ($C_{27}H_{44}O$) or ergocalciferol ($C_{28}H_{44}O$) in the portion of the sample taken:

$$\text{Result} = (r_U/r_S) \times (C_S/C_U) \times F \times 100$$

r_U = peak response of cholecalciferol or ergocalciferol from the *Sample solution*
r_S = peak response of cholecalciferol or ergocalciferol from the *Standard solution*
C_S = concentration of USP Cholecalciferol RS or USP Ergocalciferol RS in the *Standard solution* (µg/mL)
C_U = nominal concentration of cholecalciferol or ergocalciferol in the *Sample solution* (µg/mL)
F = correction factor to account for the average amount of previtamin D present in the *Sample solution*, 1.09

• **PROCEDURE 4**

This procedure is applicable to liquid dosage forms. It involves a liquid-liquid extraction of the sample with hexane, followed by the evaporation of hexane, and reconstitution of the residue in a tetrahydrofuran and acetonitrile mixture (1:1). Separation is achieved in reversed-phase mode.

Unless specified in the individual monographs, the *Standard solution, Sample solution,* and *Diluent* are prepared as follows.

Mobile phase: Methanol, acetonitrile, and *n*-hexane (46.5: 46.5: 7.0)

Diluent: Tetrahydrofuran and acetonitrile (1:1)

Standard solution: 5 µg/mL of USP Cholecalciferol RS or USP Ergocalciferol RS in *Diluent*

Sample solution: Transfer an accurately measured volume of the sample, equivalent to 50 µg of cholecalciferol or ergocalciferol, to a 500-mL separatory funnel containing 10 mL of water and 20 mL of dehydrated alcohol. Add 150 mL of solvent hexane, insert the stopper, and shake for 1 min. Add another 150 mL of solvent hexane, insert the stopper, shake, and allow the layers to separate. Discard the aqueous layer. Drain the solvent hexane extract through anhydrous sodium sulfate into a 500-mL, round-bottom flask. Evaporate the solution to dryness with the aid of a rotary evaporator over a water bath maintained at about 65°. Immediately add 10.0 mL of *Diluent*, swirl to dissolve the residue, and filter.

Chromatographic system

(See *Chromatography* ⟨621⟩, *System Suitability*.)

Mode: LC

Detector: UV 265 nm

Column: Two columns, 4.6-mm × 25-cm, connected in series; both with packing L1

Column temperature: 40°

Flow rate: 1.5 mL/min

Injection volume: 20 µL

System suitability

Sample: *Standard solution*

Suitability requirements

Relative standard deviation: NMT 5.0%

Analysis

Samples: *Standard solution* and *Sample solution*

Calculate the percentage of the labeled amount of cholecalciferol ($C_{27}H_{44}O$) or ergocalciferol ($C_{28}H_{44}O$) in the portion of the sample taken:

$$\text{Result} = (r_U/r_S) \times (C_S/C_U) \times F \times 100$$

r_U = peak response of cholecalciferol or ergocalciferol from the *Sample solution*
r_S = peak response of cholecalciferol or ergocalciferol from the *Standard solution*
C_S = concentration of USP Cholecalciferol RS or USP Ergocalciferol RS in the *Standard solution* (µg/mL)
C_U = nominal concentration of cholecalciferol or ergocalciferol in the *Sample solution* (µg/mL)
F = correction factor to account for the average amount of previtamin D present in the *Sample solution*, 1.09

• **PROCEDURE 5**

This procedure involves the dissolution of vitamin D in toluene, and the solution is injected into the liquid chromatograph. It is applicable to simple matrices such as pure vitamins and ingredients that do not require saponification and that are soluble in toluene. Separation is achieved in normal-phase mode.

Unless specified in the individual monographs, the *Standard solution, Sample solution,* and *System suitability solution* are prepared as follows.

Dehydrated hexane: Prepare a chromatographic column by packing a chromatographic tube, 8-cm × 60-cm, with 500 g of 50- to 250-µm chromatographic siliceous earth, activated by drying at 150° for 4 h. (See *Chromatography* ⟨621⟩, *Column Chromatography*.) Pass 500 mL of hexane through the column, and collect the eluate in a glass-stoppered flask.

Mobile phase: *n*-Amyl alcohol in *Dehydrated hexane* (3 in 1000)

General Chapters

System suitability solution: 250 mg of USP Vitamin D Assay System Suitability RS in 10 mL of a mixture of toluene and *Mobile phase* (1:1). Heat this solution, under reflux, at 90° for 45 min, and cool. [NOTE—This solution contains cholecalciferol, precholecalciferol, and *trans*-cholecalciferol. For the stock solutions, follow these procedures: use low-actinic glassware, dissolve the samples without heating, and prepare the solutions fresh daily.]

Standard stock solution: 0.6 mg/mL of USP Cholecalciferol RS or USP Ergocalciferol RS in toluene

Standard solution: 120 µg/mL of USP Cholecalciferol RS or USP Ergocalciferol RS in *Mobile phase*, prepared from *Standard stock solution*

Sample stock solution: 0.6 mg/mL of cholecalciferol or ergocalciferol in toluene

Sample solution: 120 µg/mL of cholecalciferol or ergocalciferol in *Mobile phase*, prepared from the *Sample stock solution*

Chromatographic system

(See *Chromatography* ⟨621⟩, *System Suitability*.)

Mode: LC

Detector: UV 254 nm

Column: 4.6-mm × 25-cm; packing L3

Column temperature: 40°

Flow rate: Can be varied to meet the *System suitability requirements*

Injection volume: 5–10 µL

System suitability

Sample: *System suitability solution*

[NOTE—The relative retention times for precholecalciferol, *trans*-cholecalciferol, and cholecalciferol are 0.4, 0.5, and 1.0, respectively.]

Suitability requirements

Resolution: NLT 1.0 between *trans*-cholecalciferol and precholecalciferol

Relative standard deviation: NMT 2.0% for the peak response of cholecalciferol

Analysis

Samples: *Standard solution* and *Sample solution*

Calculate the percentage of the labeled amount of cholecalciferol ($C_{27}H_{44}O$) or ergocalciferol ($C_{28}H_{44}O$) in the portion of the sample taken:

$$\text{Result} = (r_U/r_S) \times (C_S/C_U) \times 100$$

r_U = peak response of cholecalciferol or ergocalciferol from the *Sample solution*

r_S = peak response of cholecalciferol or ergocalciferol from the *Standard solution*

C_S = concentration of USP Cholecalciferol RS or USP Ergocalciferol RS in the *Standard solution* (µg/mL)

C_U = nominal concentration of cholecalciferol or ergocalciferol in the *Sample solution* (µg/mL)

• **PROCEDURE 6**

The procedure involves the dissolution of the sample in *Mobile phase*, and the solution is injected into the liquid chromatograph. The application includes cholecalciferol and ergocalciferol dissolved in edible vegetable oil, polysorbate 80, or propylene glycol, none of which will interfere with the corresponding precursor so that it can be quantitated. Separation is achieved in normal-phase mode on an L3 column, and *System suitability* requires separation of the *trans* forms from the vitamin D precursors.

Unless specified in the individual monographs, the *Standard solutions* and *Sample solution* are prepared as follows.

Mobile phase: Hexane and pentanol (997:3)

Standard stock solution: Dissolve USP Cholecalciferol RS or USP Ergocalciferol RS in toluene, and dilute with *Mobile phase* to 50 µg/mL. [NOTE—Prepare this solution fresh daily.]

Standard solution A: 5 µg/mL from the *Standard stock solution* in *Mobile phase*. [NOTE—Store at a temperature not above 0°.]

Standard solution B: Transfer 5.0 mL of the *Standard stock solution* to a round-bottom flask fitted with a reflux condenser. Displace the air with nitrogen, and reflux for 1 h in a water bath under a nitrogen atmosphere to obtain a solution containing cholecalciferol and precholecalciferol. Cool, transfer the solution with the aid of several portions of *Mobile phase* to a 50-mL volumetric flask, and dilute with *Mobile phase* to volume.

Sample solution: Equivalent to 5 µg/mL of cholecalciferol or ergocalciferol in *Mobile phase* from an accurately measured volume of the sample

Chromatographic system

(See *Chromatography* ⟨621⟩, *System Suitability*.)

Mode: LC

Detector: UV 254 nm

Column: 4.6-mm × 25-cm; packing L3

Flow rate: 1–2 mL/min

Injection volume: 10–20 µL

System suitability

Sample: *Standard solution B* (USP Cholecalciferol RS or USP Ergocalciferol RS)

[NOTE—The relative retention times for precholecalciferol and cholecalciferol are about 0.4 and 1.0, respectively. Those for pre-ergocalciferol and ergocalciferol are about 0.8 and 1.0, respectively.]

Suitability requirements

Resolution: NLT 1.0 between the precholecalciferol peak and the cholecalciferol peak; NLT 1.0 between the pre-ergocalciferol peak and the ergocalciferol peak

Relative standard deviation: NMT 2.0% for the peak response of cholecalciferol or ergocalciferol

Analysis

Samples: *Standard solution A*, *Standard solution B*, and *Sample solution*

Cholecalciferol or ergocalciferol response factor

Calculate the cholecalciferol or ergocalciferol response factor, F_C:

$$F_C = C_S/r_S$$

C_S = concentration of USP Cholecalciferol RS or USP Ergocalciferol RS in *Standard solution A* (µg/mL)
r_S = peak area of cholecalciferol or ergocalciferol from *Standard solution A*

Precholecalciferol or pre-ergocalciferol response factor

Calculate the concentration, C'_S, in µg/mL, of cholecalciferol or ergocalciferol in *Standard solution B*:

$$C'_S = F_C \times r'_S$$

F_C = response factor for cholecalciferol or ergocalciferol
r'_S = peak area of cholecalciferol or ergocalciferol from *Standard solution B*

Calculate the concentration, C'_{pre} in µg/mL, of precholecalciferol or pre-ergocalciferol:

$$C'_{pre} = C_S - C'_S$$

C_S = concentration of USP Cholecalciferol RS or USP Ergocalciferol RS in *Standard solution A* (µg/mL)
C'_S = concentration of cholecalciferol or ergocalciferol in *Standard solution B* (µg/mL)

Calculate the response factor, F_{pre}, for precholecalciferol or pre-ergocalciferol:

$$F_{pre} = C'_{pre}/r_p$$

C'_{pre} = concentration of precholecalciferol or pre-ergocalciferol (µg/mL)
r_p = peak response of precholecalciferol or pre-ergocalciferol from *Standard solution B*

Content of vitamin D

Calculate the percentage of the labeled amount of vitamin D as cholecalciferol ($C_{27}H_{44}O$) or as ergocalciferol ($C_{28}H_{44}O$) in the portion of the sample taken:

$$\text{Result} = \{[(F_C \times r_C) + (F_{pre} \times r_{pre})]/C_U\} \times 100$$

F_C = response factor for cholecalciferol or ergocalciferol
r_C = peak area of cholecalciferol or ergocalciferol from the *Sample solution*
F_{pre} = response factor for precholecalciferol or pre-ergocalciferol
r_{pre} = peak area of precholecalciferol or pre-ergocalciferol from the *Sample solution*
C_U = nominal concentration of cholecalciferol or ergocalciferol in the *Sample solution* (µg/mL)

• **PROCEDURE 7**

This procedure involves the saponification of the sample, followed by a liquid–liquid extraction with ether–solvent hexane, and by the evaporation of ether–hexane and reconstitution of the residue in a mixture of toluene and *Mobile phase* (1:4). It is applicable to solutions in oil and capsules containing vitamin D solutions in oil, in which the oil does not interfere with the corresponding precursor so that it can be quantitated. Separation is achieved in normal-phase mode on an L3 column, and *System suitability* requires separation of the *trans* forms from the vitamin D precursors.

Unless specified in the individual monographs, the *Standard solutions*, *Sample solution*, and reagent solutions are prepared as follows.

Dehydrated hexane: Prepare a chromatographic column by packing a chromatographic tube, 8-cm × 60-cm, with 500 g of 50- to 250-µm chromatographic siliceous earth, activated by drying at 150° for 4 h. (See *Chromatography* ⟨621⟩, *Column Chromatography*.) Pass 500 mL of hexane through the column, and collect the eluate in a glass-stoppered flask.

Mobile phase: *n*-Amyl alcohol in *Dehydrated hexane* (3 in 1000)

Butylated hydroxytoluene solution: 10 mg/mL of butylated hydroxytoluene in chromatographic hexane

Aqueous potassium hydroxide solution: 1 g/mL of potassium hydroxide in freshly boiled water. [NOTE—Prepare this solution fresh daily.]

Alcoholic potassium hydroxide solution: 3 g of potassium hydroxide in 50 mL of freshly boiled water. Add 10 mL of alcohol, and dilute with freshly boiled water to 100 mL. [NOTE—Prepare this solution fresh daily.]

Sodium ascorbate solution: 175 mg/mL of ascorbic acid in 1 N sodium hydroxide. [NOTE—Prepare fresh daily.]

Sodium sulfide solution: 12 g of sodium sulfide in 20 mL of water. Dilute with glycerin to 100 mL.

Standard stock solution: 0.5 mg/mL of USP Ergocalciferol RS or USP Cholecalciferol RS in toluene. [NOTE—Prepare this solution fresh daily.]

Standard solution A: 20 µg/mL from the *Standard stock solution* in *Mobile phase*. [NOTE—Store this solution at a temperature not above 0°.]

Standard solution B: Pipet 4 mL of the *Standard stock solution* into a round-bottomed flask fitted with a reflux condenser, and add 2 or 3 crystals of butylated hydroxytoluene. Displace the air with nitrogen, and heat in a water bath maintained at a temperature of 90° in subdued light under a nitrogen atmosphere for 45 min to obtain a solution containing vitamin D and previtamin D. Cool, transfer with the aid of several portions of *Mobile phase* to a 100-mL volumetric flask, and dilute with *Mobile phase* to volume.

System suitability solution: Add 100 mg of USP Vitamin D Assay System Suitability RS to a 10-mL volumetric flask. Add a mixture (1 in 5) of toluene and *Mobile phase* to volume, and mix. Heat a portion of this solution under reflux, at 90° for 45 min, and cool.

Sample solution: Reflux NLT 10 Capsules with a mixture of 10 mL of *Sodium ascorbate solution* and 2 drops of *Sodium sulfide solution* on a steam bath for 10 min, crush any remaining solids with a blunt glass rod, and continue heating for 5 min. Cool, and add 25 mL of alcohol and 3 mL of *Aqueous potassium hydroxide solution*. Reflux the mixture on a steam bath for 30 min. Cool rapidly under running water, and transfer the saponified mixture to a conical separator, rinsing the saponification flask with two 15-mL portions of water, 10 mL of alcohol, and two 50-mL portions of ether. [NOTE—Use ether within 24 h after opening the container.] Shake the combined saponified mixture and rinsings vigorously for 30 s, and allow to stand until both layers are clear. Transfer the aqueous phase to a second conical separator, add a mixture of 10 mL of alcohol and 50 mL of solvent hexane, and shake vigorously. Allow to separate, transfer the aqueous phase to a third conical separator, and transfer the solvent hexane phase to the first separator, rinsing the second separator with two 10-mL portions of solvent hexane and adding the rinsings to the first separator. Shake the aqueous phase in the third separator with 50 mL of solvent hexane, and add the solvent hexane phase to the first separator. Wash the combined ether–solvent hexane extracts by shaking vigorously with three 50-mL portions of *Alcoholic potassium hydroxide solution*, and wash with 50-mL portions of water vigorously until the last washing is neutral to phenolphthalein. Drain any remaining drops of water from the combined ether–solvent hexane extracts, add 2 sheets of 9-cm filter paper, in strips, to the separator, and shake. Transfer the washed ether–solvent hexane extracts to a round-bottom flask, rinsing the separator and paper with solvent hexane. Combine the solvent hexane rinsings with the ether–solvent hexane extracts, add 100 µL of *Butylated hydroxytoluene solution*, and mix. Evaporate under vacuum to dryness by swirling in a water bath maintained at a temperature not higher than 40°. Cool under running water, and introduce nitrogen sufficient to restore atmospheric pressure. Without delay, dissolve and dilute the residue in an accurately measured volume of a mixture (1 in 5) of toluene and *Mobile phase*, until the concentration of vitamin D is about 25 µg/mL.

Chromatographic system

(See *Chromatography* ⟨621⟩, *System Suitability*.)

Mode: LC

Detector: UV 254 nm

Column: 4.6-mm × 25-cm; packing L3

Flow rate: 1–2 mL/min

Injection volume: 10–20 µL

System suitability

Sample: *System suitability solution*

[NOTE—The relative retention times for precholecalciferol, *trans*-cholecalciferol, and cholecalciferol are 0.4, 0.5, and 1.0, respectively.]

Suitability requirements

Resolution: NLT 1.0 between *trans*-cholecalciferol and precholecalciferol

Relative standard deviation: NMT 2.0% for the peak response of cholecalciferol

Analysis

Samples: *Standard solution A*, *Standard solution B*, and *Sample solution*

Cholecalciferol and ergocalciferol response factor

Calculate the cholecalciferol or ergocalciferol response factor, F_D:

$$F_D = C_S/r_S$$

C_S = concentration of USP Ergocalciferol RS in *Standard solution A* (µg/mL)

r_S = peak area of cholecalciferol or ergocalciferol from *Standard solution A*

Precholecalciferol and pre-ergocalciferol response factor

Calculate the concentration, C'_S, in µg/mL, of cholecalciferol or ergocalciferol in *Standard solution B*:

$$C'_S = F_D \times r'_S$$

F_D = response factor for cholecalciferol or ergocalciferol

r'_S = peak area of cholecalciferol or ergocalciferol from *Standard solution B*

Calculate the concentration, C'_{pre}, in µg/mL, of pre-ergolecalciferol:

$$C'_{pre} = C_S - C'_S$$

C_S = concentration of USP Ergocalciferol RS in *Standard solution A* (µg/mL)
C'_S = concentration of cholecalciferol or ergocalciferol in *Standard solution B* (µg/mL)

Calculate the response factor, F_{pre}, for precholecalciferol or pre-ergocalciferol:

$$F_{pre} = C'_{pre}/r_p$$

C'_{pre} = concentration of precholecalciferol or pre-ergocalciferol (µg/mL)
r_p = peak response of precholecalciferol or pre-ergocalciferol from *Standard solution B*

Content of vitamin D

Calculate the percentage of the labeled amount of vitamin D as ergocalciferol ($C_{28}H_{44}O$) or as cholecalciferol ($C_{27}H_{44}O$) in the portion of the sample taken:

$$\text{Result} = \{[(F_D \times r_C) + (F_{pre} \times r'_{pre})]/C_U\} \times 100$$

F_D = response factor for cholecalciferol or ergocalciferol
r_C = peak area of cholecalciferol or ergocalciferol from the *Sample solution*
F_{pre} = response factor for precholecalciferol or pre-ergocalciferol
r'_{pre} = peak area of precholecalciferol or pre-ergocalciferol from the *Sample solution*
C_U = nominal concentration of cholecalciferol or ergocalciferol in the *Sample solution* (µg/mL)

- **Procedure 8**

This procedure is suitable for the determination of cholecalciferol in oils or fatty matrices. It involves two chromatographic systems, one for sample clean-up and the other for vitamin D determination. The standard, internal standard, and sample solutions are subjected to saponification, followed by a liquid–liquid extraction with a mixture of ether and hexane (1:1). The extract is evaporated and reconstituted in the *Butylated hydroxytoluene solution*.

Unless specified in the individual monographs, the *Standard solution, Sample solutions, Internal standard solution*, and reagent solutions are prepared as follows.

Solution A: *n*-Amyl alcohol and dehydrated hexane (3:997)

Solution B: Acetonitrile, water, and phosphoric acid (96: 3.8: 0.2)

Butylated hydroxytoluene solution: 10 mg/mL of butylated hydroxytoluene in chromatographic hexane

Aqueous potassium hydroxide solution: Dissolve 800 mg of potassium hydroxide in 1000 mL of freshly boiled water, mix, and cool. [Note—Prepare this solution fresh daily.]

Alcoholic potassium hydroxide solution: Dissolve 3 g of potassium hydroxide in 50 mL of freshly boiled water, add 10 mL of alcohol, and dilute with freshly boiled water to 100 mL. [Note—Prepare this solution fresh daily.]

Ascorbic acid solution: 100 mg/mL of ascorbic acid in water. [Note—Prepare this solution fresh daily.]

Internal standard solution: 5 µg/mL of USP Ergocalciferol RS in alcohol

Standard stock solution: 5 µg/mL of USP Cholecalciferol RS in alcohol

Standard solution: Transfer 2.0 mL of the *Standard stock solution* and 2.0 mL of the *Internal standard solution* to a round-bottom flask. Proceed as directed for *Sample solution 1* beginning with "Add 5 mL of...".

Sample solution 1: Transfer 4.00 g of oil to a round-bottom flask. Add 5 mL of the *Ascorbic acid solution*, 100 mL of alcohol, and 10 mL of the *Aqueous potassium hydroxide solution*, and mix. Reflux the mixture on a steam bath for 30 min. Add 100 mL of a 10-mg/mL sodium chloride solution. Cool rapidly under running water, and transfer the saponified mixture to a 500-mL separator, rinsing the saponification flask with 75 mL of a 10-mg/mL sodium chloride solution, and then with 150 mL of a mixture of ether and hexane (1:1). Shake the combined saponified mixture and rinsings vigorously for 30 s, and allow to stand until both layers are clear. Discard the lower layer. Wash the ether–hexane extracts by shaking vigorously with 50 mL of the *Alcoholic potassium hydroxide solution*, and then washing with three 50-mL portions of a 10-mg/mL sodium chloride solution. Filter the upper layer through 5 g of anhydrous sodium sulfate on a fast filter paper into a 250-mL flask suitable for a rotary evaporator. Wash the filter with 10 mL of a mixture of ether and hexane (1:1), and combine with the extract. Evaporate the solvent at reduced pressure at a temperature not exceeding 30°, and fill with nitrogen when the evaporation is complete. Alternatively evaporate the solvent under a gentle stream of nitrogen at a temperature not exceeding 30°. Dissolve the residue in 1.5 mL of the *Butylated hydroxytoluene solution*. [Note—Gentle heating in an ultrasonic bath may be required. A large fraction of the white residue is cholesterol.]

Sample solution 2: To 4.00 g of oil add 2.0 mL of *Internal standard solution*, and proceed as directed for *Sample solution 1* beginning with "Add 5 mL of...".

Clean-up chromatographic system

(See *Chromatography* 〈621〉, *System Suitability*.)

Mode: LC

Detector: UV 265 nm

Mobile phase: *Solution A*

Clean-up column: 4.6-mm × 25-cm stainless steel; packing L10

Injection volume: 350 µL

Analysis (clean-up)

Samples: *Standard solution, Sample solution 1,* and *Sample solution 2*

Collect separately the eluates from 2 min before to 2 min after the retention time of cholecalciferol in a glass tube containing 1 mL of *Butylated hydroxytoluene solution* and fitted with a hermetic closure. Evaporate each tube under a stream of nitrogen at a temperature not exceeding 30°. Dissolve each residue in 1.5 mL of acetonitrile, and inject into the analytical chromatographic system below.

Analytical chromatographic system

(See *Chromatography* ⟨621⟩, *System Suitability*.)

Mode: LC

Detector: UV 265 nm

Mobile phase: *Solution B*

Analytical column: 4.6-mm × 15-cm stainless steel; 5-µm packing L1

Injection volume: 200 µL

System suitability

Sample: *Standard solution* (after the clean-up)

Suitability requirements

Resolution: NLT 1.4 between cholecalciferol and ergocalciferol

Relative standard deviation: NMT 2.0% for the cholecalciferol peak from replicate injections

Analysis

Samples: *Standard solution, Sample solution 1,* and *Sample solution 2* (after the clean-up)

Calculate the content of vitamin D, in µg/g, in the portion of the sample taken:

$$\text{Result} = (R_U/R_S) \times (C_S/C_U)$$

R_S = peak response of cholecalciferol relative to the internal standard in the *Standard solution*

C_S = concentration of USP Cholecalciferol RS in the *Standard solution* (µg/mL)

C_U = concentration of oil in *Sample solution 2* (g/mL)

R_U = peak response of cholecalciferol relative to the internal standard in the *Standard solution 2*, as calculated as follows:

$$R_U = r_{U2}/[r_{IS2} - (r_{IS1} \times r_{U2}/r_{U1})]$$

[NOTE—If r_{IS1} = 0 due to no peak observed at the locus of the internal standard in the chromatogram of *Sample solution 1*, then $R_U = r_{U2}/r_{IS2}$.]

r_{U2} = peak response of cholecalciferol from *Sample solution 2*

r_{IS2} = peak response of the internal standard from *Sample solution 2*

r_{IS1} = peak response of the internal standard from *Sample solution 1*

r_{U1} = peak response of cholecalciferol from the *Sample solution 1*

ADDITIONAL REQUIREMENTS

- **USP REFERENCE STANDARDS ⟨11⟩**

  USP Cholecalciferol RS

  USP Ergocalciferol RS

  USP Vitamin D Assay System Suitability RS

⟨591⟩ ZINC DETERMINATION

The need for a quantitative determination of zinc in the Pharmacopeial insulin preparations reflects the fact that the element is an essential component of zinc-insulin crystals. In common with lead, zinc may be determined either by the dithizone method or by atomic absorption.

Dithizone Method

Select all reagents for this test to have as low a content of heavy metals as practicable. If necessary, distill water and other solvents into hard or borosilicate glass apparatus. Rinse thoroughly all glassware with warm dilute nitric acid (1 in 2) followed by water. Avoid using on the separator any lubricants that dissolve in chloroform.

Special Solutions and Solvents—

ALKALINE AMMONIUM CITRATE SOLUTION—Dissolve 50 g of dibasic ammonium citrate in water to make 100 mL. Add 100 mL of ammonium hydroxide. Remove any heavy metals that may be present by extracting the solution with 20-mL portions of *Dithi-*

General Chapters

zone Extraction Solution (see *Lead* ⟨251⟩) until the dithizone solution retains a clear green color, then extract any dithizone remaining in the citrate solution by shaking with chloroform.
CHLOROFORM—Distill chloroform in hard or borosilicate glass apparatus, receiving the distillate in sufficient dehydrated alcohol to make the final concentration 1 mL of alcohol for each 100 mL of distillate.
DITHIZONE SOLUTION—Use *Standard Dithizone Solution* (see *Lead* ⟨251⟩), prepared with the distilled *Chloroform*.
STANDARD ZINC SOLUTION—Dissolve 625 mg of zinc oxide, accurately weighed, and previously gently ignited to constant weight, in 10 mL of nitric acid, and add water to make 500.0 mL. This solution contains 1.0 mg of zinc per mL.
DILUTED STANDARD ZINC SOLUTION—Dilute 1 mL of *Standard Zinc Solution*, accurately measured, with 2 drops of nitric acid and sufficient water to make 100.0 mL. This solution contains 10 µg of zinc per mL. Use this solution within 2 weeks.
TRICHLOROACETIC ACID SOLUTION—Dissolve 100 g of trichloroacetic acid in water to make 1000 mL.

Procedure—Transfer 1 to 5 mL of the preparation to be tested, accurately measured, to a centrifuge tube graduated at 40 mL. If necessary, add 0.25 *N* hydrochloric acid, dropwise, to obtain a clear solution. Add 5 mL of *Trichloroacetic Acid Solution* and sufficient water to make 40.0 mL. Mix, and centrifuge.

Transfer to a hard-glass separator an accurately measured volume of the supernatant believed to contain from 5 to 20 µg of zinc, and add water to make about 20 mL. Add 1.5 mL of *Alkaline Ammonium Citrate Solution* and 35 mL of *Dithizone Solution*. Shake vigorously 100 times. Allow the chloroform phase to separate. Insert a cotton plug in the stem of the separator to remove any water emulsified with the chloroform. Collect the chloroform extract (discarding the first portion that comes through) in a test tube, and determine the absorbance at 530 nm, with a suitable spectrophotometer.

Calculate the amount of zinc present by reference to a standard absorbance-concentration curve obtained by using 0.5 mL, 1.0 mL, 1.5 mL, and, if the zinc content of the sample extracted exceeds 15 µg, 2.0 mL of the *Diluted Standard Zinc Solution*, corrected as indicated by a blank determination run concomitantly, using all of the reagents but no added zinc.

Physical Tests and Determinations

⟨601⟩ INHALATION AND NASAL DRUG PRODUCTS: AEROSOLS, SPRAYS, AND POWDERS—PERFORMANCE QUALITY TESTS

TABLE OF CONTENTS

Introduction
A. Delivered-Dose Uniformity
A.1 Nasal Aerosols and Nasal Sprays
A.1.1 Delivered-Dose Uniformity of Product
A.1.1.1 Sampling the Delivered Dose from Nasal Sprays
A.1.1.2 Sampling the Delivered Dose from Nasal Aerosols

A.2 Inhalation Aerosols and Inhalation Sprays
A.2.1 Delivered-Dose Uniformity of Product
A.2.1.1 Sampling the Delivered Dose from Inhalation Aerosols and Inhalation Sprays

A.3 Nasal Powders
A.3.1 Delivered-Dose Uniformity of Product
A.3.1.1 Sampling the Delivered Dose from Nasal Powders

A.4 Inhalation Powders
A.4.1 Delivered-Dose Uniformity of Product
A.4.1.1 Sampling the Delivered Dose from Inhalation Powders

B. Droplet/Particle Size Distribution—Nasal Aerosols, Sprays, and Powders

B.1 Particle Size Measurement by Laser Diffraction

C. Aerodynamic Size Distribution—Inhalation Aerosols, Sprays, and Powders

C.1 General Principles of Aerodynamic Particle Size Measurement

C.1.1 Stage Mensuration

C.1.2 Interstage Drug Loss (Wall Losses)

C.1.3 Re-Entrainment

C.1.4 Mass Balance

C.2 Apparatus 1 for Inhalation Aerosols and Sprays—Andersen Impactor (without Pre-separator)

C.2.1 Design—Apparatus 1

C.2.2 Procedure—Apparatus 1

C.3 Apparatus 2 for Inhalation Powders—Marple-Miller Impactor

C.3.1 Design—Apparatus 2

C.3.2 Procedure—Apparatus 2

C.4 Apparatus 3 for Inhalation Powders—Andersen Impactor (with pre-separator)

C.4.1 Design—Apparatus 3

C.4.2 Procedure—Apparatus 3

C.5 Apparatus 4 for Inhalation Powders—Multistage Liquid Impinger

C.5.1 Design—Apparatus 4

C.5.2 Procedure—Apparatus 4

C.6 Apparatus 5 for Inhalation Powders—Next Generation Impactor (with pre-separator)

C.6.1 Design—Apparatus 5

C.6.2 Procedure—Apparatus 5

C.7 Apparatus 6 for Inhalation Aerosol and Sprays—Next Generation Impactor (with pre-separator)

C.7.1 Design—Apparatus 6

C.7.2 Procedure—Apparatus 6

INTRODUCTION

The major performance measures for nasal and inhalation aerosols, sprays, and powders relate to dose delivery to the patient, including delivered-dose uniformity and relevant measures of particle size (optical or aerodynamic) depending on the dosage form. Each of these is described in the following sections. A nomenclature table appears in *Inhalation and Nasal Drug Products—General Information and Product Quality Tests* ⟨5⟩, from which the descriptive terms for various dosage forms can be obtained.

A. DELIVERED-DOSE UNIFORMITY

A.1 Nasal Aerosols and Nasal Sprays

The following test is applicable to nasal aerosols and sprays formulated as nonaqueous or aqueous suspensions or solutions of drug, presented typically in multidose containers, and fitted with dose-metering valves or pumps. In all cases and for all tests, prepare and test the spray as directed in the labeling and the instructions for use.

A.1.1 DELIVERED-DOSE UNIFORMITY OF PRODUCT

Unless otherwise directed in the individual monograph, the drug content of the minimum delivered doses collected at the beginning of unit life, and also at the end of unit life, will be determined from each of 10 separate containers. This represents a total of 20 determinations. These measurements shall be made after priming as described in the labeling or instructions for use. The number of doses not to exceed 2 sprays (i.e., a total of 20 determinations).

A.1.1.1 Sampling the delivered dose from nasal sprays

Procedure—To ensure reproducible in vitro dose collection, it is recommended that a mechanical means of actuating the metering system or pump assembly be used to deliver doses for collection. The mechanical actuation procedure should have adequate controls for the critical mechanical actuation parameters (e.g., actuation force, actuation speed, stroke length, and rest periods). The test must be performed on units that have been thoroughly shaken and primed according to the patient-use instructions. The test unit should be actuated in a vertical or near-vertical, valve-up position. The dose collected at the beginning of each of the 10 test containers should be the dose immediately following priming, and the dose collected at the end of each container's life should correspond to the last label claim number of doses from the same container. The doses between the two sequential test samples should be disposed of appropriately.

For suspension products, the dose should be delivered into a suitable container (e.g., scintillation vial) in which quantitative transfer from the container under test can be accomplished. A validated analytical method is employed to determine the amount of drug in each delivered dose, and data are reported as a percent of label claim. For solution products, the delivered dose can be determined gravimetrically from the weight of the delivered dose and the concentration and density of the fill solution of the product under test.

A.1.1.2 Sampling the delivered dose from nasal aerosols: See *A.2.1.1 Sampling the Delivered Dose from Inhalation Aerosols and Inhalation Sprays.*

A.2 Inhalation Aerosols and Inhalation Sprays

The following tests are applicable to inhalation aerosols (commonly known as metered-dose inhalers) and inhalation sprays. Inhalation aerosols are formulated as suspensions or solutions of a drug substance in propellants and possibly other suitable excipients and are presented as multidose units. Inhalation sprays typically are aqueous-based liquid formulations packaged in a compact container–closure system containing an integral spray pump unit. Refer to 〈5〉 for additional information. The following test methods are specific to these products and may require modification when analysts test alternative inhalation technologies (for example, breath-actuated inhalation aerosols or inhalation sprays). However, pharmacopeial requirements for all dose-metered inhalation dosage forms require determination of the delivered dose and aerodynamic size distribution. In all cases and for all tests prepare and test the product as directed on the label and the instructions for use. When these directions are not provided by the product manufacturer, follow the precise dose-discharge directions included in the following tests.

A.2.1 DELIVERED-DOSE UNIFORMITY OF PRODUCT

The test for *Delivered-Dose Uniformity* is required for inhalation aerosols and inhalation sprays containing drug formulation (e.g., solution or suspension) either in device-metered or in pre-metered unit presentations. The test for *Delivered-Dose Uniformity* includes dose uniformity over the entire unit life. (For products packaged in pre-metered dosage units, see also *Uniformity of Dosage Units* 〈905〉.) A dose in this test is defined as the minimum recommended number of sprays specified in the product labeling or instructions for use but not more than two sprays. For inhalation aerosols and inhalation sprays, the target-delivered dose is specified by the label claim, unless otherwise specified in the individual monograph. Its value reflects the expected mean drug content for a large number of delivered doses collected from many units of the product using the method specified in the monograph.

Unless otherwise directed in the individual monograph, the drug content of the delivered doses collected at the beginning of unit life (after priming as described on the label or instructions for use) and end of unit life of the label claim, will be determined from each of 10 separate containers (i.e., a total of 20 determinations).

A.2.1.1 Sampling the delivered dose from inhalation aerosols and inhalation sprays

Procedure—To determine the content of active ingredient in the discharged plume from an inhalation aerosol and inhalation spray, use the sampling *Apparatus A* (see *Figure 1*) described below. Prepare the product for use according to the label instructions for shaking, priming, and firing. Unless otherwise specified in the individual monograph, with the vacuum pump running, ensuring an airflow rate through the product device of 28.3 L of air per minute (±5%), discharge the minimum recommended actuations into the apparatus through the mouthpiece adapter by actuating the metering system for a duration sufficient to ensure that the dose has been completely discharged. The volume of air sampled should not exceed 2.0 L. The dose collected from each of the 10 test containers should be the dose immediately following priming, and the dose collected at the end of each container's life should be the last dose according to the label claim. Unless otherwise prescribed in the patient instructions, shake the product for 5 s, and collect the first actuation following priming. Wait for 5 s and collect the next actuation, if justified. The doses between the two sequential test samples (i.e., beginning and end of container life) should be disposed of appropriately. Note that for inhalation aerosols the rate of discharges (number of discharges per unit time) to waste should not cause excessive canister cooling. Following separate collections of the minimum number of actuations from each

unit at each sequential test sample, detach the product from *Apparatus A* (see *Figure 1*), and disconnect the vacuum. Separately assay the contents of the apparatus for drug at the beginning and end sequential test samples after rinsing the filter and the interior of the apparatus with a suitable solvent.

Apparatus A—The sampling apparatus (see *Figure 1*) consists of a filter support base with an open-mesh filter support such as a stainless steel screen, a collection tube that is clamped or screwed to the filter support base, and a mouthpiece adapter to ensure an airtight seal between the collection tube and the mouthpiece. Use a mouthpiece adapter that ensures that the opening of the product's mouthpiece is flush with the front face or 2.5-mm indented shoulder in the sample collection tube, as appropriate. The vacuum connector is connected to a system comprising a vacuum source, flow regulator, and flowmeter. The source should be capable of pulling air through the complete assembly, including the filter and the product to be tested, at the desired flow rate. During tests of inhalation aerosols, air should be drawn continuously through the system to avoid loss of drug into the atmosphere. The filter support base is designed to accommodate 25-mm diameter filter disks. At the airflow used, the sample collection tube and the filter disk must be capable of quantitatively collecting the delivered dose. The filter disk and other materials used in the construction of the apparatus must be compatible with the drug and the solvents that are used to extract the drug from the filter. One end of the collection tube is designed to hold the filter disk tightly against the filter support base. When assembled, the joints between the components of the apparatus are airtight so that when a vacuum is applied to the base of the filter, all of the air drawn through the collection device passes through the product device.

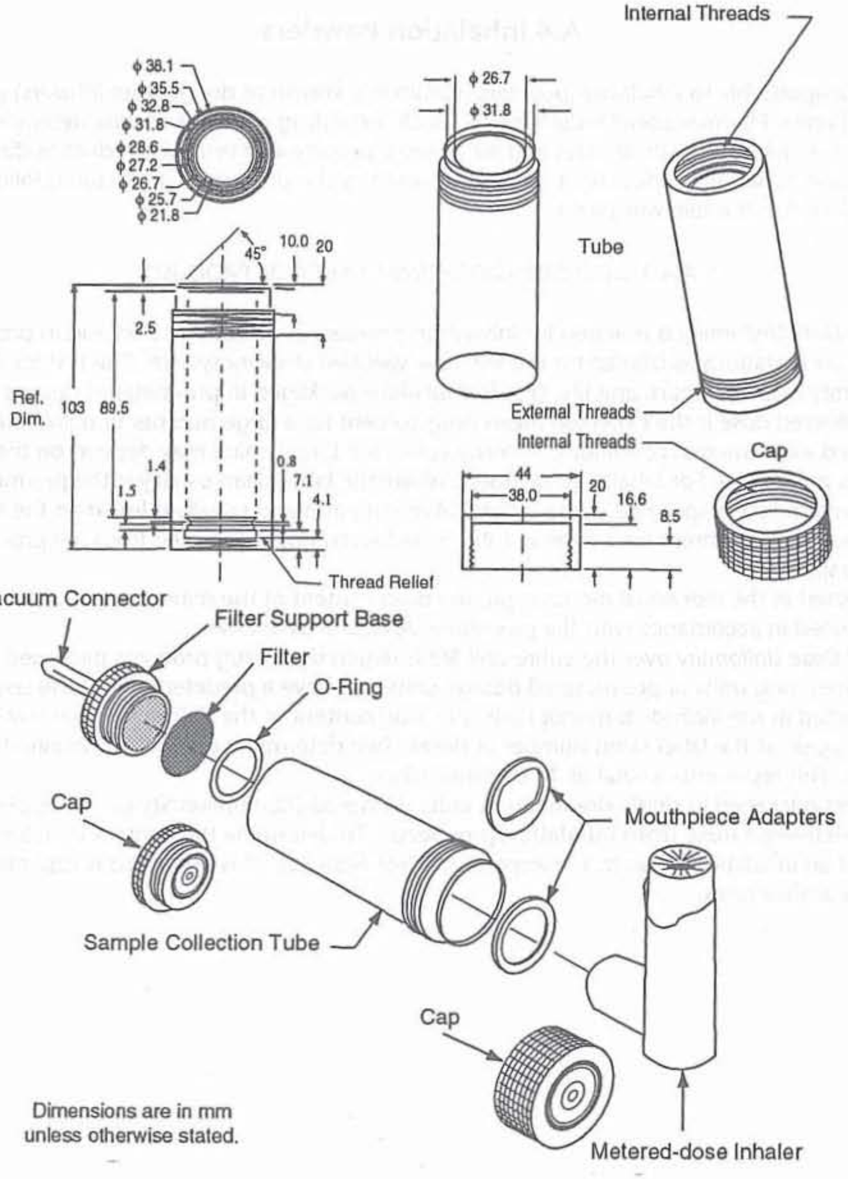

Figure 1. Sampling apparatus for inhalation aerosols and sprays.

A.3 Nasal Powders

The following test is applicable to nasal powders presented in pre-metered and device-metered units. In all cases and for all tests, prepare and test the powder as directed in the labeling and the instructions for use.

A.3.1 DELIVERED-DOSE UNIFORMITY OF PRODUCT

Unless otherwise directed in the individual monograph, the drug content of the minimum delivered doses from each of 10 separate containers will be determined at the beginning of unit life and again at the label claim number of metered doses. This represents a total of 20 determinations. For nasal powders packaged in single-dose units, *Delivered-Dose Uniformity* can be applied on 10 dosage units.

A.3.1.1 Sampling the delivered dose from nasal powders: To ensure reproducible in vitro dose collection, it is recommended that appropriate means of actuating the device assembly be used to deliver doses for collection. The test unit should be actuated in a vertical or near-vertical position. The two separate doses collected include the first dose and the dose corresponding to the last labeled dose from each of 10 units. The doses between the two sequential test samples for each unit should be disposed of appropriately. A validated analytical method is used to determine the amount of drug in each delivered dose, and data are reported as a percentage of label claim. Apparatus B (*Figure 2*) is recommended for nasal powders.

A.4 Inhalation Powders

The following tests are applicable to inhalation powders (commonly known as dry powder inhalers) presented as pre-metered or device-metered units. Pharmacopeial requirements for all these drug products require determination of the delivered dose and aerodynamic size distribution. In all cases and for all tests, prepare and test the product as directed in the labeling and the instructions for use. When these directions are not provided by the product manufacturer, follow the precise dose-discharge directions included in the following tests.

A.4.1 DELIVERED-DOSE UNIFORMITY OF PRODUCT

The test for *Delivered-Dose Uniformity* is required for inhalation powders in device-metered and in pre-metered (including ordered multiple-dose) presentations as labeled for use with the specified delivery system. The test for *Delivered-Dose Uniformity* includes dose uniformity over the entire unit life. (For formulations packaged in pre-metered dosage units, see also ⟨905⟩.) Note that the target delivered dose is the expected mean drug content for a large number of delivered doses collected from many units under defined experimental conditions. In many cases, the target value may depend on the manner in which the test for delivered dose is performed. For inhalation powders, where the label claim usually is the pre-metered or metered dose of drug, the target delivered dose is specified in the individual monograph and usually is less than the label claim. Its value reflects the expected mean drug content for a large number of delivered doses collected from the product using the method specified in the monograph.

Unless otherwise directed in the individual monograph, the drug content of the minimum delivered dose from each of 10 separate units is determined in accordance with the procedure described as follows.

The test for *Delivered-Dose Uniformity* over the entire unit life is required for drug products packaged in device-metered or in ordered multiple-dose metering units of pre-metered dosage units that have a predetermined dose sequence.

Unless otherwise directed in the individual monograph, the drug content of the delivered doses will be collected at the beginning of unit life and again at the label claim number of doses. Two determinations will be obtained from each of 10 separate drug product units. This represents a total of 20 determinations.

For inhalation powders packaged in single dosage form units, *Delivered-Dose Uniformity* can be applied on 10 dosage units.

A.4.1.1 Sampling the delivered dose from inhalation powders: To determine the content of active ingredient emitted from the mouthpiece of an inhalation powder, use *Apparatus B* (see *Figure 2*). This apparatus is capable of sampling the emitted doses at a variety of airflow rates.

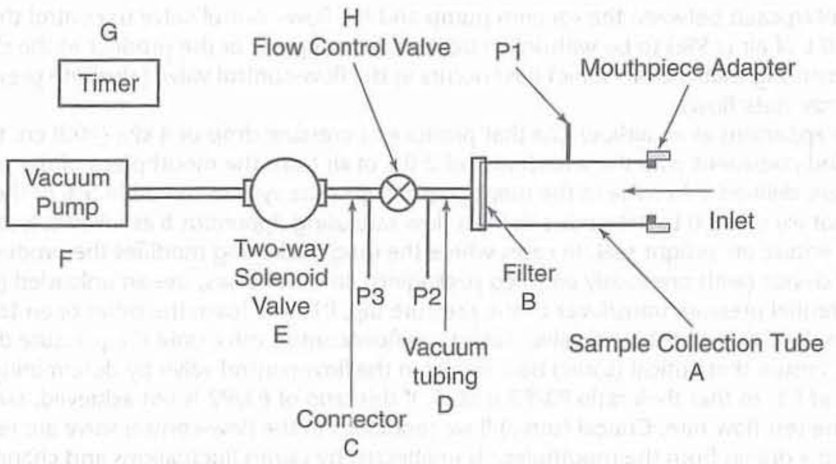

Figure 2. Apparatus B: Sampling apparatus for inhalation powders. (See *Table 1* for component specifications.)

Table 1. Component Specifications for Apparatus B (see *Figure 2*)

Code	Item	Description	Dimensions
A	Sample collection tube[a]	See *Figure 2*	34.85-mm ID × 12-cm length
B	Filter[b]	See *Figure 2*	47-mm glass fiber filter
C	Connector	(e.g., short metal coupling with low-diameter branch to P3)	≥8-mm ID
D	Vacuum tubing	(e.g., silicon tubing with an outside diameter of 14 mm and an internal diameter of 8 mm)	A length of suitable tubing ≥8-mm ID with an internal volume of 25 ± 5 mL
E	Two-way solenoid valve[c]	See *Figure 2*	2-way, 2-port solenoid valve having an ID ≥8 mm and an opening response time of ≤100 milliseconds.
F	Vacuum pump[d]	See *Figure 2*	Pump must be capable of drawing the required flow rate through the assembled apparatus with the inhalation powder in the mouthpiece adapter. Connect the pump to the solenoid valve using short and wide (≥10-mm ID) vacuum tubing and connectors to minimize pump capacity requirements.
G	Timer[e]	See *Figure 2*	The timer switches current directly to the solenoid valve for the required duration.
P1	Pressure tap	See *Figure 2*	2.2-mm ID, 3.1-mm OD flush with the internal surface of the sample collection tube, centered and burr free, 59 mm from its inlet. The pressure taps P1, P2, and P3 must not be open to the atmosphere during dose collection.
P1, P2, P3	Pressure measurements[f]	—	—
H	Flow-control valve[g]	See *Figure 2*	Adjustable regulating valve with maximum $C_v \geq 1$[h]

[a] An example is a Millipore product number XX40 047 00 (Millipore Corporation, 80 Ashby Road, Bedford, MA 01732) modified so that the exit tube has an ID ≥8 mm, fitted with Gelman product number 61631.

[b] A/E (Gelman Sciences Inc., 600 South Wagner Road, Ann Arbor, MI 48106) or equivalent.

[c] ASCO product number 8030G13, Automatic Switch Company, 60 Hanover Road, Florham Park, NJ 07932.

[d] Gast product type 1023, 1423, or 2565 (Gast Manufacturing Inc., PO Box 97, Benton Harbor, MI 49022) or equivalent.

[e] Eaton Product number 45610-400 (Eaton Corporation, Automotive Products Division, 901 South 12th Street, Watertown, WI 53094) or equivalent.

[f] An example is a PDM 210 pressure meter (Air-Neotronics Ltd., Neotronics Technology plc, Parsonage Road, Takeley, Bishop's Stortford, CM22 6PU, UK) or equivalent.

[g] Parker Hannifin type 8FV12LNSS (Parker Hannifin plc., Riverside Road, Barnstable, Devon EX31 1NP, UK) or equivalent.

[h] Flow Coefficient, as defined by ISA S75.02 Control valve capacity test procedure in *Standards and Recommended Practices for Instrumentation and Control*, 10th ed., Vol. 2, 1989. Published by Instrument Society of America, 67 Alexander Drive, PO Box 1227, Research Triangle Park, NC 27709, USA.

Apparatus B—The apparatus is similar to that described in *Figure 1* for testing inhalation aerosols. In this case, however, the filter and collection tube have a larger internal diameter to accommodate 47-mm diameter filter disks. This feature enables dosage collection at higher airflow rates—up to 100 L of air/min—when necessary. A mouthpiece adapter ensures an airtight seal between the collection tube and the mouthpiece of the inhalation powder being tested. The mouthpiece adapter must ensure that the tip of the product's mouthpiece is flush with the open end of the sample collection tube. Tubing connectors, if they are used, should have an internal diameter ≥8 mm to preclude their own internal diameters from creating significant airflow resistance. A vacuum pump with excess capacity must be selected in order to draw air at the designated volumetric flow rate through both the sampling apparatus and the product simultaneously. A timer-controlled, low-resistance, solenoid-oper-

ated, two-way valve is interposed between the vacuum pump and the flow-control valve to control the duration of flow. This type of valve enables 4.0 L of air (±5%) to be withdrawn from the mouthpiece of the product at the designated flow rate. Flow control is achieved by ensuring that critical (sonic) flow occurs in the flow-control valve (absolute pressure ratio P3/P2 is ≤0.5 under conditions of steady-state flow).

Procedure—Operate the apparatus at an airflow rate that produces a pressure drop of 4 kPa (40.8 cm H_2O) over the product to be tested and for a period consistent with the withdrawal of 2.0 L of air from the mouthpiece of the product. [NOTE—If the flow rate and duration are defined otherwise in the monograph, adjust the system to within 5% of those values.] The volume of air sampled should not exceed 2.0 L. Determine the test flow rate using *Apparatus B* as follows. Insert the product into the mouthpiece adapter to ensure an airtight seal. In cases where the drug packaging modifies the product's resistance to airflow, use a loaded, drug-free device (with previously emptied packaging). In other cases, use an unloaded (drug-free) device. Connect one port of a differential pressure transducer to the pressure tap, P1, and leave the other open to the atmosphere. Switch on the pump, and open the two-way solenoid valve. Adjust the flow-control valve until the pressure drop across the product is 4.0 kPa (40.8 cm H_2O). Ensure that critical (sonic) flow occurs in the flow-control valve by determining the individual values for absolute pressure, P2 and P3, so that their ratio P3/P2 is ≤0.5. If this ratio of P3/P2 is not achieved, switch to a more powerful pump and remeasure the test flow rate. Critical (sonic) flow conditions in the flow-control valve are required in order to ensure that the volumetric airflow drawn from the mouthpiece is unaffected by pump fluctuations and changes in airflow resistance of the product. Remove the product from the mouthpiece adapter and, without disturbing the flow-control valve, measure the airflow rate drawn from the mouthpiece, Q_{out}, by connecting a flowmeter to the mouthpiece adaptor in an airtight fashion. Use a flowmeter calibrated for the volumetric flow leaving the meter in an airtight fashion to directly determine Q_{out} or, if such a meter is unobtainable, calculate the volumetric flow leaving the meter (Q_{out}) using the ideal gas law. For example, for a meter calibrated for the entering volumetric flow (Q_{in}) calculate:

$$Q_{out} = Q_{in}P_0/(P_0 - \Delta P)$$

P_0 = atmospheric pressure
ΔP = pressure drop over the meter

If the flow rate is >100 L of air/min, adjust the flow-control valve until Q_{out} equals 100 L/min; otherwise, record the value of Q_{out}, and leave the flow-control valve undisturbed. Define the test flow duration, e.g., at 60 L/min $T = 120/Q_{out}$, in seconds, so that a volume of 2.0 L of air (±5%) is withdrawn from the product at the test flow rate Q_{out}, and adjust the timer controlling the operation of the two-way solenoid valve accordingly. Prime or load the device with powder for inhalation according to the labeled instructions. With the vacuum pump running and the solenoid valve closed, insert the product's mouthpiece horizontally into the mouthpiece adapter. Discharge the powder into the sampling apparatus by activating the timer controlling the solenoid valve and withdrawing 2.0 L of air from the product at the previously defined airflow rate. Repeat the whole operation $n - 1$ times beginning with the text, "Prime or load the device with powder," where n is the number of times defined in the labeling as the minimum recommended dose. Detach the inhalation powder device container from the sampling apparatus, and disconnect the vacuum tubing, D. Assay the contents of the apparatus for drug after rinsing the filter and the interior of the apparatus with a suitable solvent. Where specified in the individual monograph, perform this test under conditions of controlled temperature and humidity.

B. DROPLET/PARTICLE SIZE DISTRIBUTION—NASAL AEROSOLS, SPRAYS, AND POWDERS

For suspension and solution nasal aerosols, sprays, and powders, the emitted droplet/particle size distribution should be determined for the delivered plume subsequent to delivery under specified experimental conditions. If a laser diffraction method is used (for more detail, refer to the description of this method in the following section), droplet size distribution can be controlled in terms of ranges for the 10th (D_{10}), 50th (D_{50}), and 90th (D_{90}) percentiles of the cumulative volume (mass)-weighted size distribution, as well as the span of the distribution, expressed as $[(D_{90} - D_{10})/D_{50}]$, and the percentage of droplets less than 10 µm. Note that D_{50} is identical with the volume (mass) median diameter if the distribution is unimodal. Appropriate and validated or calibrated emitted droplet/particle size analytical procedures should be described in sufficient detail to allow accurate and reproducible assessment including the following:

- complete information about the apparatus and accessories
- theoretical model (Lorenz–Mie or Fraunhofer approximation)
- the application of a disabling option for one or more of the innermost detectors to mitigate beam steering effects (only applicable to nasal aerosols)
- software version
- sample placement with respect to the optical bench of the laser diffractometer
- measurement range
- beam width
- laser trigger condition in connection with the initiation and termination of the measurement sequence
- lower limit of detection (if laser triggering is not used)
- and obscuration limit (upper bound of detection range in terms of particle concentration).

B.1 Particle Size Measurement by Laser Diffraction

Nasal drug products intended for topical application to the nasal cavity produce liquid droplets that typically are much larger than the operating range for multistage inertial impactors. Thus, laser diffraction (sometimes referred to as low-angle laser light scattering) is an acceptable alternative for determining the size distribution because there is no need to relate the size scale to aerodynamic diameter.

The theory and operating principles for laser diffraction are well described in ISO 13320:2009. These systems use the light scattering pattern produced by passage of a cloud of droplets through the measurement zone to develop the volume-weighted size distribution in an iterative process in which a theoretical model (either Fraunhofer or Lorenz–Mie) is used to interpret the data. The process is summarized schematically in *Figure 3*. [NOTE—If the Lorenz–Mie model option is chosen, it will be necessary to input values for the real (refraction) and imaginary (absorption) components of refractive index for the liquid being studied. Manufacturers of laser diffraction equipment provide this information for commonly encountered liquid media either on their website or upon enquiry.]

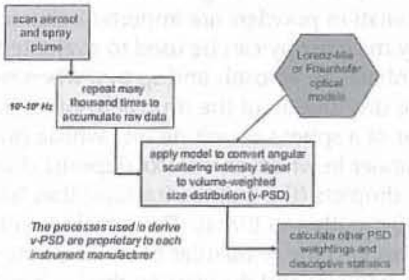

Figure 3. Conversion of light scattering data into a droplet size distribution by laser diffractometry.

An apparatus that has the capability to assess aerosols or sprays is required. [NOTE—not all commercially available laser diffractions possess this capability.] Set up the measurement system in accordance with the procedure outlined schematically in *Figure 4*.

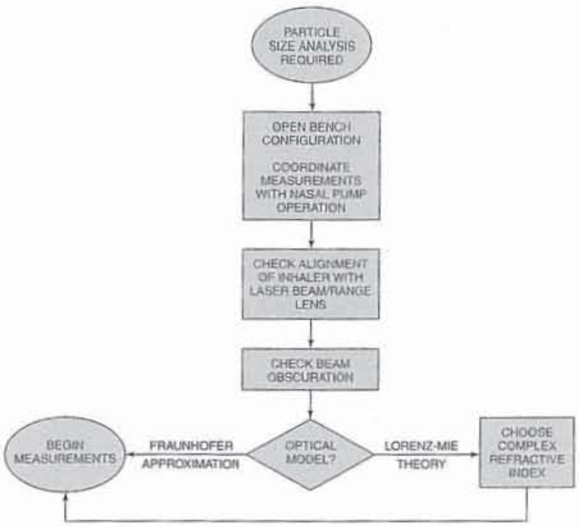

Figure 4. Setup for laser diffractometry with a nasal drug product.

Nasal drug product sprays generally are measured with an open-bench arrangement with an automated actuation station set-up so that reproducibility in inhaler operation from one actuation to the next can be optimized. This precaution is particularly important for the most accurate measurements with nasal spray pumps. Check the alignment of the inhaler with the optical configuration of the laser diffractometer using the tools provided by the manufacturer to optimize alignment of the optical bench. Check that the light beam obscuration is within the upper and lower limits specified by the manufacturer, consulting the operator's manual for the laser diffraction system being used. Vacuum extraction is required to efficiently remove droplets after they pass through the laser. An unrepresentative result may occur if this value is set too low (typically <5%). Unquantifiable error due to multiple scattering will happen if the obscuration is above the recommended upper limit. [NOTE—This limit varies from one manufacturer to another and may also vary from one laser diffractometer system to another from the same manufacturer.]

Make as many replicates as needed to achieve a representative data set. Inspect each size distribution presented, ideally in differential volume-weighted format or equivalent to assess whether or not it is unimodal and symmetrical. [NOTE—The following data analysis assumes that these criteria are met. If not, additional analysis taking into account the presence of more than one mode in the distribution or skewness may be required.]

Assuming that the density of the liquid under investigation is constant irrespective of droplet size, the volume-weighted size distributions may be treated as mass-weighted size distributions for the purpose of data interpretation. From the cumulative volume–size distribution data, calculate the mean and one standard deviation for the sizes that correspond to mass fractions less than 10%, 50%, and 90% of the distribution (D_{10}, D_{50}, and D_{90}).

C. AERODYNAMIC SIZE DISTRIBUTION—INHALATION AEROSOLS, SPRAYS, AND POWDERS

C.1 General Principles of Aerodynamic Particle Size Measurement

The particle or droplet size distribution in the plume discharged from inhalation aerosols and sprays and the particle size distribution in the cloud discharged from inhalation powders are important characteristics used in judging product performance. Although particle size measurement by microscopy can be used to evaluate the number of large particles, agglomerates, and foreign particulates in the emissions of inhalation aerosols and sprays, whenever possible this test should be replaced with a method to determine the aerodynamic size distribution of the drug aerosol leaving the product. The aerodynamic diameter of an aerosol particle is equal to the diameter of a sphere of unit density whose gravimetric settling velocity is the same. The aerodynamic size distribution defines the manner in which an aerosol deposits during inhalation. In use, many inhalers discharge drug in the form of large particles or droplets (the ballistic fraction) that leave the inhaler at high velocity and impact in and are captured by the moist surfaces in the mouth and throat. The remainder of the discharge from the inhaler is useful aerosol, a "nonballistic fraction" that is inhaled into the remainder of the respiratory tract.

Cascade impaction devices classify aerosol particles and droplets on the basis of aerodynamic diameters. The principle of their operation whereby they separate aerosol particles and droplets from a moving airstream on the basis of particle or droplet inertia is shown in *Figure 5*. Because the dimensions of the induction port used to connect products to the cascade impactors and impingers (shown in *Apparatus 1, 2, 3, 4, 5,* and *6*) also define the mass of drug that enters the aerodynamic sizing device, these are carefully defined and, where possible, are held constant between each apparatus (see *Figures 6, 7, 8, 9, 10,* and *11*).

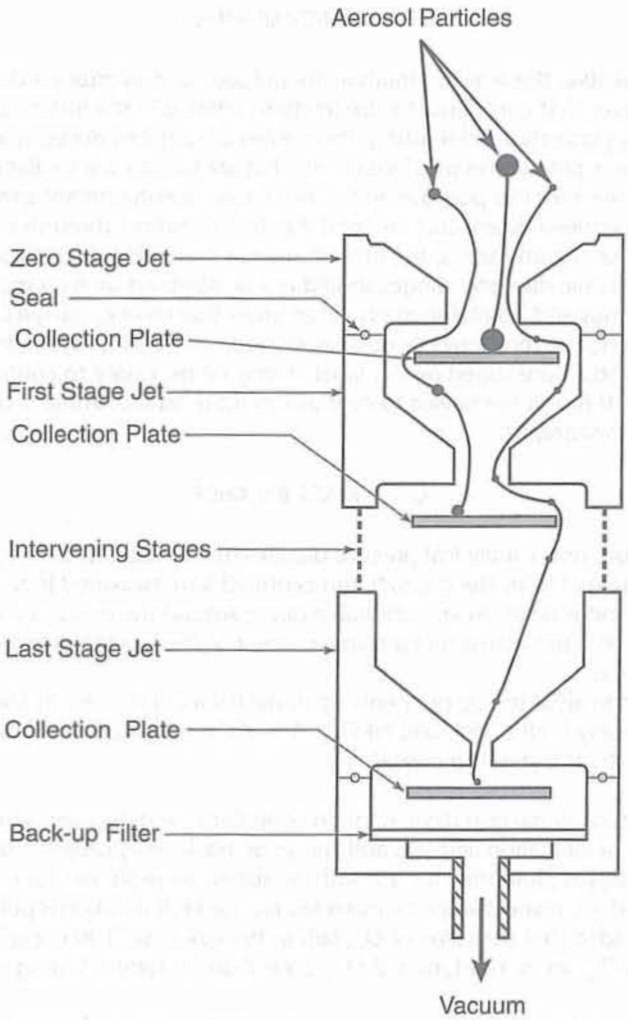

Figure 5. Schematic representation of the principle of operation of cascade impactors. (A single jet per impactor stage is shown. Impactors with multiple jets in each stage function in the same manner.)

C.1.1 STAGE MENSURATION

Manufacturers of cascade impaction devices provide a definitive calibration for the separation characteristics of each impaction stage in terms of the relationship between the stage collection efficiency and the aerodynamic diameter of particles and droplets passing through it as an aerosol. Calibration is a property of the jet dimensions, the spatial arrangement of the jet and its collection surface, and the airflow rate passing through it. Because jets can corrode and wear over time, the critical dimensions of each stage, which define that impaction stage's calibration, must be measured on a regular basis. This process, known as stage mensuration, replaces the need for repetitive calibration using standard aerosols and ensures that only devices that conform to specifications are used for testing product output. The process involves the measurement and adjustment of the critical dimensions of the instrument.

C.1.2 INTERSTAGE DRUG LOSSES (WALL LOSSES)

Where method variations are possible and there is no apparatus specified in the monograph, the selected procedure should ensure that NMT 5% of the product's total delivered drug mass (into the impactor) is subject to loss between the impaction device's sample collection surfaces. In the event that interstage drug losses are known to be >5%, either the procedure should be performed in such a way that wall losses are included along with the associated collection plate, or an alternative apparatus should be used. As an example, the following procedures described for *Apparatus 1* and *3* have been written to include wall losses along with the associated collection plate. Provided, however, that such losses are known to be ≤5% of the total delivered drug mass into the impactor and that there are no instructions to the contrary in an individual monograph, the procedure may be simplified by assaying only drug on the collection plates.

C.1.3 RE-ENTRAINMENT

Where method variations are possible, the selected method should seek to minimize particle re-entrainment (from an upper to a lower impaction stage) on stages that contribute to size fractions defined in the individual monograph, especially where this may affect the amounts of drug collected. Minimizing the number of sampled doses, using coated particle-collection surfaces, and proving that multiple-dose procedures produce results that are statistically similar to those from smaller numbers of doses are all methods that can be used for this purpose. In the event that re-entrainment cannot be avoided, the number of doses collected, the time interval between doses, and the total duration of airflow through the cascade impaction device should be standardized. Under these circumstances, the presentation of impaction data should not presume the validity of the impactor's calibration (i.e., aerodynamic diameter ranges should not be assigned to drug masses collected on specific stages).

By using appropriate assay methods and a suitable mensurated impaction device, analysts can determine aerodynamic particle size distributions for drugs leaving the mouthpieces of inhalation aerosols and sprays or inhalation powders. If temperature or humidity limits for use of the product are stated on the label, it may be necessary to control the temperature and humidity of the air surrounding and passing through the device to conform to those limits. Ambient conditions are presumed unless otherwise specified in individual monographs.

C.1.4 MASS BALANCE

In addition to the size distribution, good analytical practice dictates that a mass balance be performed in order to confirm that the amount of the drug discharged from the product and captured and measured in the induction port through the after-filter of the cascade impactor apparatus is within an acceptable range around the measured delivered dose. The result for the recovered mass can be expressed on a per-actuation basis as a percent of the labeled delivered dose, which represents the dose delivered from the mouthpiece.

The total mass of drug collected in all of the components (material balance) divided by the total number of minimum recommended doses discharged typically is NLT 85% and NMT 115% of the target delivered label claim. This is not a test of the product but serves to ensure that the test results are valid.

Procedure

Use one of the following multistage impaction devices, or an equivalent, to determine aerodynamic particle size distributions of drugs leaving the mouthpieces of inhalation aerosols and sprays or inhalation powders. *Apparatus 1* and *6* [*Figures 6* and *11* (without pre-separator), respectively] are intended for use with inhalation aerosols and sprays at a single airflow rate. *Apparatus 2, 3, 4,* and *5* (*Figures 8, 9, 10,* and *11*, respectively) are intended for use with inhalation powders at the appropriate airflow rate, Q_{out}, determined earlier, provided that the value of Q_{out} falls in the range 30–100 L/min. [NOTE—If Q_{out} is >100 L/min, testing should be performed with Q_{out} set at 100 L/min; if Q_{out} is less than 30 L/min, testing should be performed with Q_{out} at 30 L/min.]

Table 2 indicates the apparatus used to determine aerodynamic particle size and the products that they are used to evaluate.

Table 2. Aerodynamic Particle Size Apparatus: Their Description and the Products That They Can Be Used to Evaluate

Apparatus	Description	Product
1	Andersen (8-Stage Non-Viable) Impactor (without pre-separator)	Inhalation aerosols and sprays
2	Marple-Miller Impactor	Inhalation powders
3	Andersen (8-Stage Non-Viable) Impactor (with pre-separator)	Inhalation powders
4	Multistage Liquid Impinger	Inhalation powders
5	Next Generation Impactor (with pre-separator)	Inhalation powders
6	Next Generation Impactor (without pre-separator)	Inhalation aerosols and sprays

Table 3. Cut-off Values for All Impactors at Specified Flow Rates
a. Cut-Points for Apparatus 1 and 3 with Standard Configuration for Operation at 28.3 L/min Compared with Specialized Configurations for Use at 60 L/min and 90 L/min

Stage	28.3 L/min	60 L/min	90 L/min
−2	—	—	8.0
−1	—	8.6	6.5
0[a]	9.0	6.5	5.2
1	5.8	4.4	3.5
2	4.7	3.2	2.6

[a] The version of stage 0 used at 60 and 90 L/min has external modification permitting another stage rather than the inlet adapter cone to be fitted above it. Its internal characteristics and performance are unaltered.

Table 3. Cut-off Values for All Impactors at Specified Flow Rates
a. Cut-Points for Apparatus 1 and 3 with Standard Configuration for Operation at 28.3 L/min Compared with Specialized Configurations for Use at 60 L/min and 90 L/min *(Continued)*

Stage	28.3 L/min	60 L/min	90 L/min
3	3.3	1.9	1.7
4	2.1	1.2	1.0
5	1.1	0.55	0.22
6	0.7	0.26	—
7	0.4	—	—

[a] The version of stage 0 used at 60 and 90 L/min has external modification permitting another stage rather than the inlet adapter cone to be fitted above it. Its internal characteristics and performance are unaltered.

b. Cut-points (µm) for Apparatus 2 at 60 and 90 L/min

Stage	Flow Rate (60 L/min)	Flow Rate (90 L/min)
1	10.0	8.1
2	5.0	4.0
3	2.5	2.0
4	1.25	1.0
5	0.63	0.5

c. Cut-points (µm) for Apparatus 4 at 60 L/min

Stage	Flow Rate (60 L/min)
1	13.0
2	6.8
3	3.1
4	1.7

d. Cut-points (µm) for Apparatus 5 and 6 at 30, 60, and 100 L/min

Stage	Flow Rate (30 L/min)	Flow Rate (60 L/min)	Flow Rate (100 L/min)
1	11.76	8.06	6.12
2	6.40	4.46	3.42
3	3.97	2.82	2.18
4	2.30	1.66	1.31
5	1.36	0.94	0.72
6	0.83	0.55	0.40
7	0.54	0.34	0.24
MOC[a]	0.36	0.14	0.07

[a] MOC = Micro-orifice collector. Sizes correspond to 80% collection efficiency for this back-up stage.

C.2 Apparatus 1 for Inhalation Aerosols and Sprays—Andersen Impactor (without pre-separator)

Use *Apparatus 1*, or an equivalent, at a flow rate of 28.3 L/min (±5%) as specified by the manufacturer of the cascade impactor.

C.2.1 DESIGN—APPARATUS 1

The design and assembly of this apparatus and the induction port to connect the impactor to a product are shown in *Figures 6, 6a,* and *6b.*[1]

[1] A suitable cascade impactor is available as Model Mk II from Thermo-Electron, 27 Forge Parkway, Franklin, MA 02038. The impactor is used without the pre-separator. The product is connected to the impactor via the induction port atop the entrance cone shown in *Figure 6*. If an equivalent impactor is employed, the induction port in *Figure 6a* should be used, although the entrance cone (*Figure 6b*) should be replaced with one to fit the impactor in question. Note that the internal surfaces of the induction port (*Figure 6a*) are designed to fit flush with their counterparts in the entrance cone (*Figure 6b*). This design avoids aerosol capture at the junction of the two pipes.

General Chapters

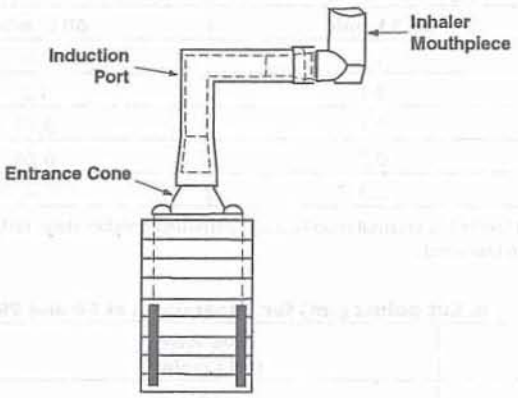

Figure 6. Apparatus 1: Assembly of induction port and entrance cone mounted on cascade impactor.

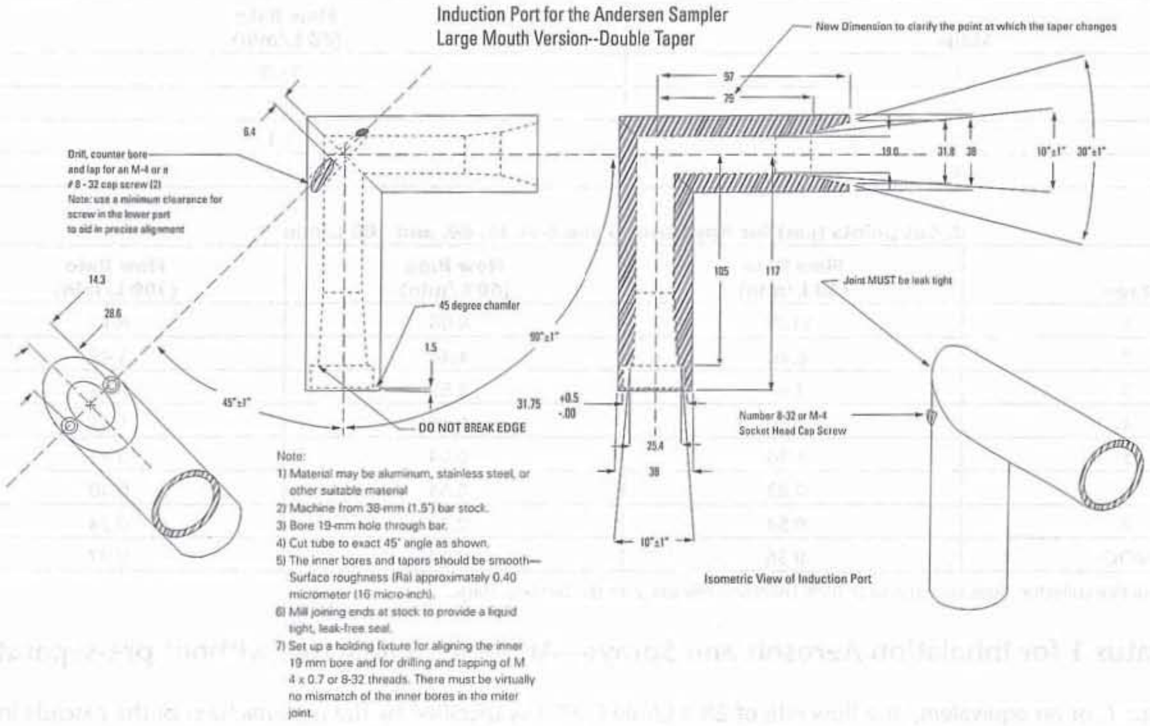

Figure 6a. Apparatus 1: Expanded view of induction port for use with inhalation aerosols and sprays and inhalation powders.

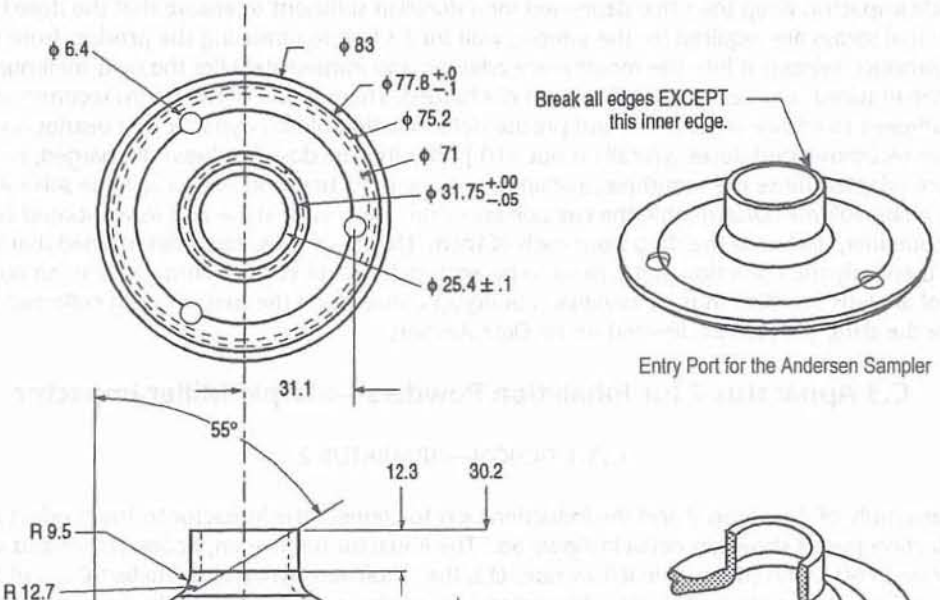

Figure 6b. Apparatus 1: Expanded view of the entrance cone for mounting induction port on the Andersen cascade impactor without pre-separator. Material can be aluminum, stainless steel, or other suitable material. Surface roughness (R_a) should be approximately 0.4 µm.

Manufacturers' critical engineering dimensions for the stages of *Apparatus 1* are provided in *Table 4*. During use, some occlusion and blockage of jet nozzles may occur, and therefore, in-use mensuration tolerances must be justified.

Table 4. Critical Dimensions for the Jet Nozzles of Apparatus 1

Stage Number	Number of Jets	Nozzle Diameter (mm)
0	96	2.55 ± 0.025
1	96	1.89 ± 0.025
2	400	0.914 ± 0.013
3	400	0.711 ± 0.013
4	400	0.533 ± 0.013
5	400	0.343 ± 0.013
6	400	0.254 ± 0.013
7	201	0.254 ± 0.013

C.2.2 PROCEDURE—APPARATUS 1

Set up the multistage cascade impactor as described in the manufacturer's literature with an after-filter below the final stage to capture any fine particles that otherwise would escape from the device. To ensure efficient particle capture, coat the particle collection surface of each stage with glycerol, silicone oil, or other suitable liquid typically deposited from a volatile solvent unless this has been demonstrated to be unnecessary. Attach the induction port and mouthpiece adapter to produce an airtight seal between the product mouthpiece and the induction port as shown in *Figure 6*. Use a mouthpiece adapter that ensures that the tip of the product's mouthpiece is flush with the open end of the induction port. Ensure that the various stages of the cascade impactor are connected with airtight seals to prevent leaks. Turn on the vacuum pump to draw air through the cascade impactor, and calibrate the airflow through the system with an appropriate flowmeter attached to the open end of the induction port. Adjust the flow-control valve on the vacuum pump to achieve steady flow through the system at the required rate, and ensure that the airflow through the system is within ±5% of the flow rate specified by the manufacturer. Unless otherwise prescribed in the patient instructions, shake the product for 5 s and discharge one delivery to waste. With the vacuum pump running, insert the mouthpiece into the mouthpiece adapter and immediately fire the minimum recommended

dose into the cascade impactor. Keep the valve depressed for a duration sufficient to ensure that the dose has been completely discharged. If additional sprays are required for the sample, wait for 5 s before removing the product from the mouthpiece adapter, shake the product, reinsert it into the mouthpiece adapter, and immediately fire the next minimum recommended dose. Repeat until the required number of doses has been discharged. The number of minimum recommended doses discharged must be sufficient to ensure an accurate and precise determination of aerodynamic size distribution. [NOTE—The number of minimum recommended doses typically is not >10.] After the last dose has been discharged, remove the product from the mouthpiece adapter. Rinse the mouthpiece adapter and the induction port with a suitable solvent, and dilute quantitatively to an appropriate volume. Disassemble the cascade impactor, place each stage and its associated collection plate or filter in a separate container, and rinse the drug from each of them. [NOTE—If it has been determined that wall losses in the impactor are ≤5%, then only the collection plates need to be analyzed.] Dilute each quantitatively to an appropriate volume. Using the method of analysis specified in the individual monograph, determine the mass of drug collected in each of the components. To analyze the data, proceed as directed under *Data Analysis*.

C.3 Apparatus 2 for Inhalation Powders—Marple Miller Impactor

C.3.1 DESIGN—APPARATUS 2

The design and assembly of *Apparatus 2* and the induction port to connect the impactor to the product are shown in *Figure 8*.[2] [NOTE—The induction port is shown in detail in *Figure 6a*.] The impactor has five impaction stages and an after-filter. At a volumetric airflow rate of 60 L/min (the nominal flow rate, Q_n), the cutoff aerodynamic diameters $D_{50,Qn}$ of Stages 1–5 are 10, 5, 2.5, 1.25, and 0.625 µm, respectively. The after-filter effectively retains aerosolized drug in the particle size range up to 0.625 µm. Set up the multistage cascade impactor with the control system as specified in *Figure 7*. To ensure efficient particle capture, coat the particle collection surface of each stage with glycerol, silicone oil, or other suitable liquid typically deposited from a volatile solvent unless this has been demonstrated to be unnecessary. Assemble the impactor as described in the manufacturer's literature with an after-filter below the final stage to capture any fine particles that otherwise would escape from the device. Attach the induction port and mouthpiece adapter to produce an airtight seal between the product's mouthpiece and the induction port. Use a mouthpiece adapter that ensures that the tip of the product's mouthpiece is flush with the open end of the induction port. Ensure that the various stages of the cascade impactor are connected with airtight seals to prevent leaks.

Turn on the vacuum pump, open the solenoid valve, and calibrate the airflow through the system as follows. Connect a flowmeter to the induction port. Use a flowmeter calibrated for the volumetric flow leaving the meter to directly determine Q_{out}, or, if such a meter is unobtainable, calculate the volumetric flow leaving the meter (Q_{out}) using the ideal gas law. For example, for a meter calibrated for the entering volumetric flow (Q_{in}), calculate:

$$Q_{out} = Q_{in}P_0/(P_0 - \Delta P)$$

P_0 = atmospheric pressure
ΔP = pressure drop over the meter

Adjust the flow-control valve to achieve a steady flow through the system at the required rate, Q_{out}, so that Q_{out} is within ±5% of the value determined during testing for *Delivered-Dose Uniformity*. Ensure that critical flow occurs in the flow-control valve at the airflow rate to be used during testing by using the following procedure. With the product in place, and the intended flow running, measure the absolute pressure on both sides of the flow-control valve (P2 and P3 in *Figure 7*). A ratio of P3/P2 ≤0.5 indicates critical flow. If this ratio of P3/P2 is not achieved, switch to a more powerful pump, and remeasure the test flow rate. Adjust the timer controlling the operation of the two-way solenoid valve so that it opens this valve for a duration such that the total volume sampled is at least 4 L. Prime or load the inhalation powder according to the labeled instructions. With the vacuum pump running and the two-way solenoid valve closed, insert the product's mouthpiece, held horizontally, into the induction port mouthpiece adapter. Discharge the powder into the apparatus by opening the two-way solenoid valve for a duration of *T* seconds. After the two-way solenoid valve has closed, remove the product from the mouthpiece adapter. If additional doses are required for the sample, reload the product according to the labeled instructions, reinsert the mouthpiece into the mouthpiece adapter, and repeat the operation until the required number of doses has been discharged. After discharge of the last dose, switch off the vacuum pump. Rinse the mouthpiece adapter and induction port with a suitable solvent, and quantitatively dilute to an appropriate volume. Disassemble the cascade impactor, and place the after-filter in a separate container. Rinse the drug from each of the stages and the filter, and quantitatively dilute each to an appropriate volume. Using the method of analysis specified in the individual monograph, determine the mass of drug collected in each of the components.

[2] The cascade impactor is available as Model 160 Marple Miller Impactor from MSP Corporation, Minneapolis, MN. The product should be connected to the impactor via the induction port shown in *Figure 6a*.

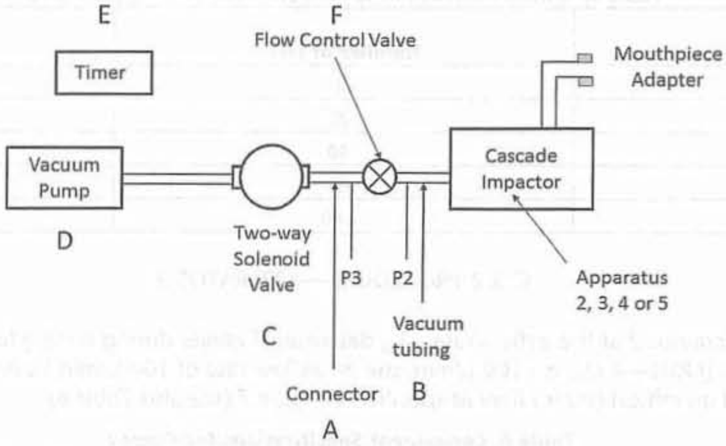

Figure 7. Apparatus 2, 3, 4, or 5: General control equipment. (See *Table 6* for component specifications.)

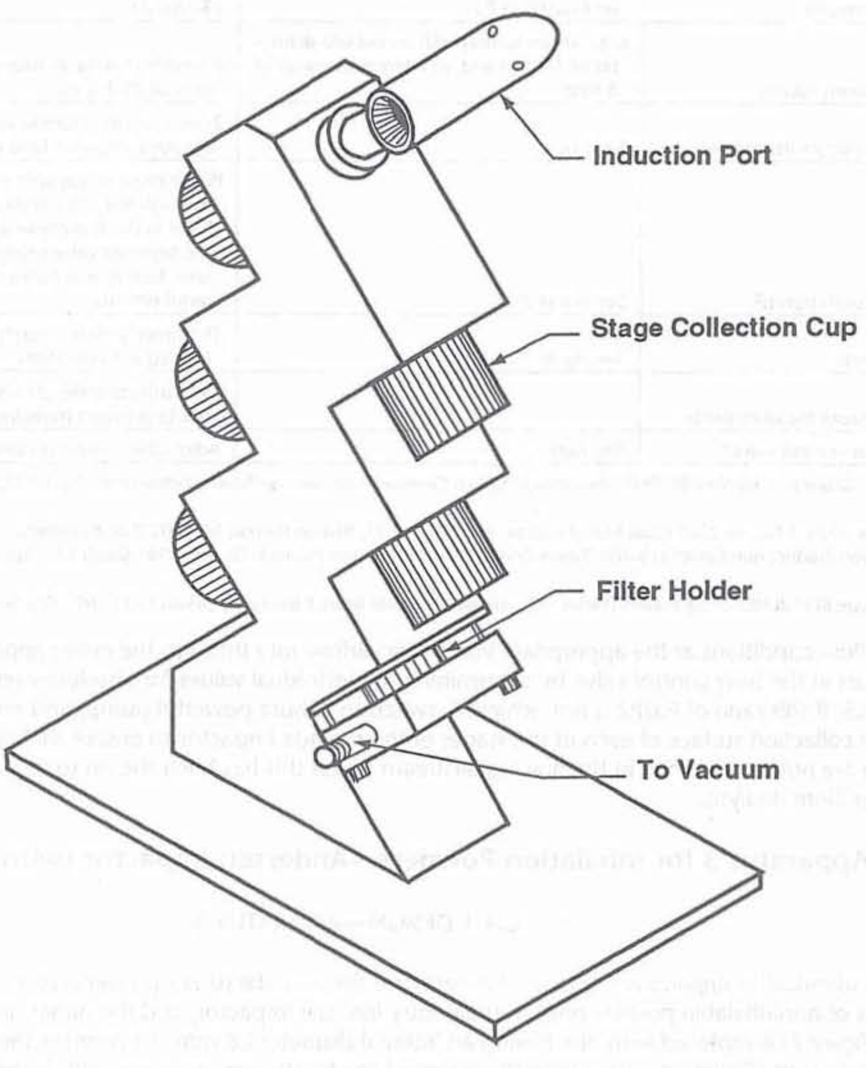

Figure 8. Apparatus 2: Assembly of induction port, stage collector, and filter holder. (Marple-Miller impactor, Model 160 with USP induction port.)

Table 5. Critical Dimensions for the Jet Nozzles of Apparatus 2

Stage Number	Number of Jets	Nozzle Diameter (mm)
1	1	16.8 ± 0.05
2	20	3.40 ± 0.03
3	40	1.70 ± 0.01
4	80	0.84 ± 0.01
5	160	0.41 ± 0.01

C.3.2 PROCEDURE—APPARATUS 2

Perform the test using *Apparatus 2* at the airflow rate, Q_{out} determined earlier during testing for *Delivered-Dose Uniformity* provided Q_{out} is ≤100 L/min. [NOTE—If Q_{out} is >100 L/min, use an airflow rate of 100 L/min.] Connect the apparatus to a flow control system that is based on critical (sonic) flow as specified in *Figure 7* (see also *Table 6*).

Table 6. Component Specifications for *Figure 7*

Code	Item	Description	Dimensions
A	Connector	e.g., short metal coupling with low diameter branch to P3	≥8-mm ID
B	Vacuum tubing	e.g., silicon tubing with an outside diameter of 14 mm and an internal diameter of 8 mm	A length of suitable tubing ≥8 mm ID with an internal volume of 25 ± 5 mL
C	Two-way solenoid valve[a]	See *Figure 7*	2-way, 2-port solenoid valve having an ID ≥8 mm and an opening response time of ≤100 milliseconds
D	Vacuum pump[b]	See *Figure 7*	Pump must be capable of drawing the required flow rate through the assembled apparatus with the dry powder inhaler in the mouthpiece adapter. Connect the pump to the solenoid valve using short and wide (≥10-mm ID) vacuum tubing and connectors to minimize pump capacity requirements.
E	Timer[c]	See *Figure 7*	The timer switches current directly to the solenoid valve for the required duration.
P2, P3	Pressure measurements		Determined under steady-state flow conditions with an absolute pressure transducer
F	Flow control valve[d]	See *Figure 7*	Adjustable regulating valve with maximum $C_V \geq 1$

[a] An example is ASCO product number 8030G13 (Automatic Switch Company, 60 Hanover Road, Florham Park, NJ 07932) or equivalent. See also footnote *h* in *Table 1*.
[b] Gast product type 1023, 1423, or 2565 (Gast Manufacturing Inc., PO Box 97, Benton Harbor, MI 49022) or equivalent.
[c] An example is Eaton Product number 45610-400 (Eaton Corporation, Automotive Products Division, 901 South 12th Street, Watertown, WI 53094) or equivalent.
[d] Parker Hannifin type 8FV12LNSS or equivalent (Parker Hannifin plc, Riverside Road, Barnstable, Devon EX31 1NP, UK). See also footnote *h* in *Table 1*.

Under steady flow conditions at the appropriate volumetric airflow rate through the entire apparatus ensure that critical (sonic) flow occurs in the flow control valve by determining the individual values for absolute pressure, P2 and P3, so that the ratio P3/P2 is ≤0.5. If this ratio of P3/P2 is not achieved, switch to a more powerful pump, and remeasure the test flow rate. Coat the particle collection surface of each of the stages of the cascade impactor to ensure that particles that have impacted on a given stage are not re-entrained in the flowing airstream unless this has been shown to be unnecessary. Analyze the data as directed under *Data Analysis*.

C.4 Apparatus 3 for Inhalation Powders—Andersen Impactor (with pre-separator)

C.4.1 DESIGN—APPARATUS 3

Apparatus 3 is identical to *Apparatus 1* (*Figure 6*) except that the manufacturer's pre-separator is added atop Stage 0 to collect large masses of noninhalable powder prior to their entry into the impactor, and the outlet nipple used to connect to vacuum tubing B (*Figure 7*) is replaced with one having an internal diameter ≥8 mm. To connect the pre-separator of the impactor to the induction port (*Figure 6a*), use a specially designed top for the pre-separator. This is shown in *Figure 9*.[3] The impactor, therefore, has eight stages, a pre-separator (to collect large particulates), and an after-filter. A pre-separator may not be required for certain engineered powders, notably those of low bulk density. Connect the cascade impactor into the control system specified in *Figure 7*. Omit Stage 6 and Stage 7 from the impactor if the test flow rate, Q_{out}, used during testing for

[3] The cascade impactor is available as Andersen 1ACFM Non-Viable Cascade Impactor (Mark II) from Thermo-Electron, 27 Forge Parkway, Franklin, MA 02038. The impactor is used with the pre-separator.

Delivered-Dose Uniformity was ≥60 L/min. To ensure efficient particle capture, coat the particle collection surface of each stage with glycerol, silicone oil, or other suitable liquid typically deposited from a volatile solvent unless this has been demonstrated to be unnecessary. Assemble the impactor as described in the manufacturer's literature with an after-filter below the final stage to capture any fine particles that otherwise would escape from the device. Place an appropriate volume (up to 10 mL) of an appropriate solvent into the pre-separator, or coat the particle collection surfaces of the pre-separator to prevent re-entrainment of impacted particles. [*Caution—Some solvents form flammable vapor–air mixtures that may be ignited during passage through a vacuum pump. Take appropriate precautions (alternative solvents, use of vapor traps, minimal pump operating times, etc.) to ensure operator safety during testing.*] Attach a molded mouthpiece adapter to the end of the induction port to produce an airtight seal between the product's mouthpiece and the induction port. Use a mouthpiece adapter that ensures that the tip of the product's mouthpiece is flush with the open end of the induction port. Ensure that the various stages of the cascade impactor are connected with airtight seals to prevent leaks.

Turn on the vacuum pump, open the two-way solenoid valve, and calibrate the airflow through the system as follows. Prime or load the inhalation powder according to the labeled instructions. With the vacuum pump running and the two-way solenoid valve closed, insert the product's mouthpiece, held horizontally, into the induction port mouthpiece adapter. Once the product is positioned, discharge the powder into the apparatus by activating the timer and opening the two-way solenoid valve for the required duration such that the total volume sampled is at least 4 L. After the two-way solenoid valve has closed, remove the product from the mouthpiece adapter. If additional doses are required for the sample, reload the inhalation powder according to the labeled instructions, reinsert the mouthpiece into the mouthpiece adapter, and repeat the operation until the required number of doses has been discharged. After discharge of the last dose, remove the product from the mouthpiece adapter, and switch off the vacuum pump.

Carefully disassemble the apparatus. Using a suitable solvent, rinse the drug from the mouthpiece adapter, induction port, and pre-separator, and quantitatively dilute to an appropriate volume. Rinse the drug from each stage and the impaction plate immediately below into appropriately sized flasks. Quantitatively dilute each flask to an appropriate volume. Using the method of analysis specified in the individual monograph, determine the mass of drug collected in each of the samples.

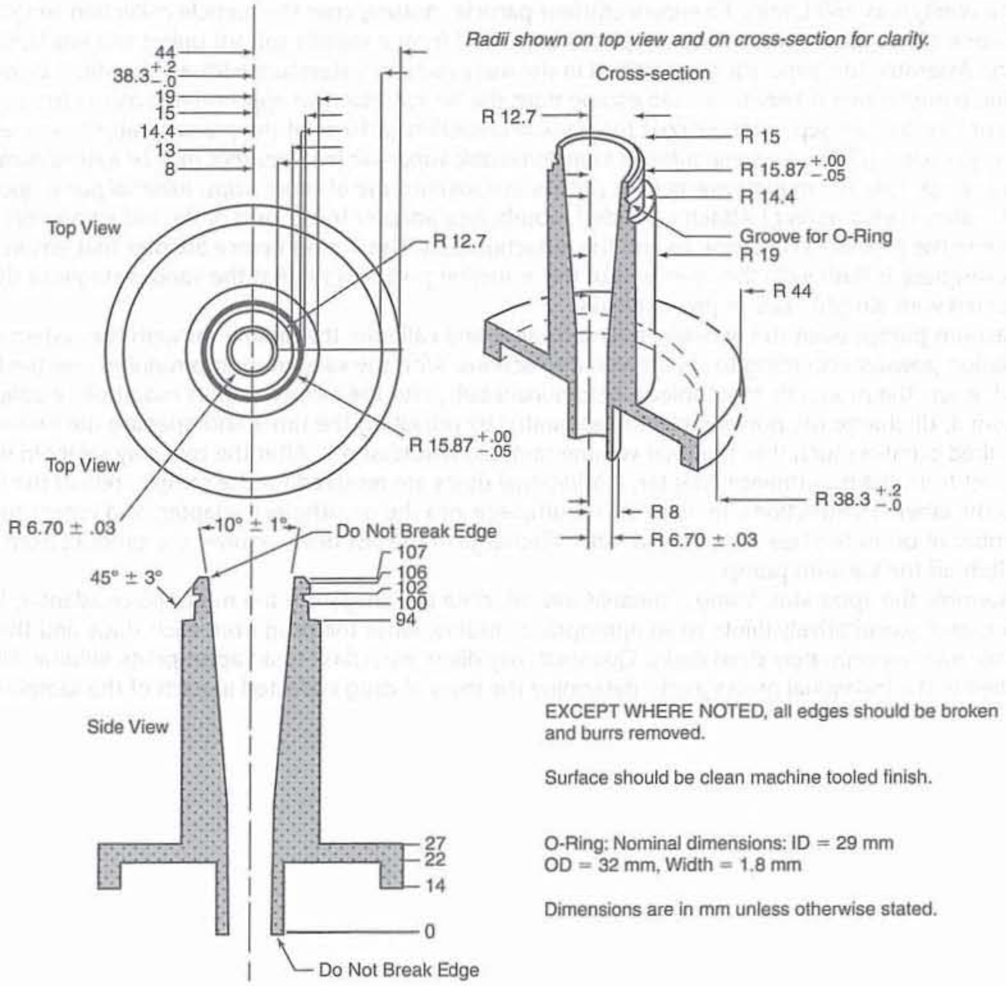

Figure 9. Apparatus 3: Expanded views of top for the Andersen pre-separator adapted to the USP induction port. Material may be aluminum, stainless steel, or other suitable material; interior bore should be polished to surface roughness (R_a) approximately 0.4 µm.

C.4.2 PROCEDURE—APPARATUS 3

Proceed as directed in the *Procedure* under *Apparatus 2*, except use *Apparatus 3.*

C.5 Apparatus 4 for Inhalation Powders—Multistage Liquid Impinger

NOTE—*Apparatus 4,* the multistage liquid impinger, has a small number of stages and is used extensively outside the United States. It is provided here for the benefit of users in countries other than the United States.

C.5.1 DESIGN—APPARATUS 4

The design and assembly of *Apparatus 4* are shown in *Figures 10, 10a,* and *10b.*[4] The induction port used to connect the impinger to a product is shown in *Figure 6a.* The device is a multistage liquid impinger consisting of impaction Stages 1, 2, 3, and 4 and an integral after-filter (Stage 5). The collection stages of the liquid impinger (see *Figure 10* and *Table 7*) are kept moist, unlike those of traditional impactors such as *Apparatus 1, 2, 3, 5,* and *6.* Wetting may produce an effect similar to coating the stages of *Apparatus 2, 3, 5,* and *6* at certain flow rates, although this should be confirmed by demonstrating control over re-entrainment as described earlier. An impaction stage comprises an upper horizontal metal partition wall (B) through which a metal inlet jet tube (A) with its impaction plate (D) is protruding; a glass cylinder (E) with sampling port (F), forming the vertical wall of the stage; and a lower horizontal metal partition wall (G) through which a jet tube (H) connects to the lower stage. The tube into Stage 4 (U) ends in a multi-jet arrangement. The impaction plate (D) is secured in a metal frame (J),

[4] The five-stage impinger is available from Copley Instruments, plc, Nottingham, UK. The product should be connected to the impactor via the induction port shown in *Figure 8* and *Figure 6a.*

which is fastened by two wires (K) to a sleeve (L) secured on the jet tube (C). For more detail of the jet tube and impaction plate, see *Figure 10a*. The horizontal plane of the collection plate is perpendicular to the axis of the jet tube and is centrally aligned. The upper surface of the impaction plate is slightly raised above the edge of the metal frame. A recess around the perimeter of the horizontal partition wall guides the position of the glass cylinder. The glass cylinders are sealed against the horizontal partition walls with gaskets (M) and are clamped together by six bolts (N). The sampling ports are sealed by stoppers. The bottom side of the lower partition wall of Stage 4 has a concentric protrusion fitted with a rubber O-ring (P) that seals against the edge of a filter placed in the filter holder. The filter holder (R) is a basin with a concentric recess in which a perforated filter support (S) is flush-fitted. The filter holder is designed for 76-mm diameter filters. The whole impaction stage assembly is clamped onto the filter holder by two snap locks (T). The impinger is equipped with an induction port (*Figure 6a*) that fits onto the Stage 1 inlet jet tube. A rubber O-ring on the jet tube provides an airtight connection to the induction port. An elastomeric mouthpiece adapter to fit the product being tested provides an airtight seal between the product's mouthpiece and the induction port.

Ensure that *Apparatus 4* is clean and free of drug solution from any previous tests. Place a 76-mm diameter filter in the filter stage, and assemble the apparatus. Use a low-pressure filter capable of quantitatively collecting the passing drug aerosol, which also allows a quantitative recovery of the collected drug. Set up *Apparatus 4* using the control system as specified in *Figure 7*. Attach the induction port (*Figure 6a*) and mouthpiece adapter to produce an airtight seal between the product mouthpiece and the induction port. Use a mouthpiece adapter that ensures that the tip of the product's mouthpiece is flush with the open end of the induction port. Ensure that the various stages of the apparatus are connected with airtight seals to prevent leaks. Turn on the vacuum pump, open the two-way solenoid valve, and calibrate the airflow through the system as follows. Connect a flowmeter calibrated for the volumetric flow rate leaving the meter to the induction port. Adjust the flow-control valve to achieve a steady flow through the system at the required rate, Q_{out}, so that Q_{out} is within ±5% of the value determined during testing for *Delivered-Dose Uniformity*. Ensure that critical flow occurs in the flow-control valve at the value of Q_{out} that will be used during testing, using the following procedure. With the product in place and the intended flow running, measure the absolute pressure on both sides of the flow-control valve (P2 and P3 in *Figure 7*). A ratio of P3/P2 ≤0.5 indicates critical flow. If this ratio of P3/P2 is not achieved, switch to a more powerful pump, and remeasure the test flow rate. Adjust the timer controlling the operation of the two-way solenoid valve so that it opens that valve for the same duration, *T*, as used during testing for *Delivered-Dose Uniformity*. Dispense 20 mL of a solvent that is capable of dissolving the drug into each of the four upper stages of *Apparatus 4*, and replace the stoppers. [*Caution—Some solvents form flammable vapor–air mixtures that may be ignited during passage through a vacuum pump. Take appropriate precautions (alternative solvents, use of vapor traps, minimal pump operating times, etc.) to ensure operator safety during testing.*] Tilt the apparatus to wet the stoppers, thereby neutralizing their electrostatic charge. Adjust the timer controlling the operation of the two-way solenoid valve so that it opens the valve for the duration such that the total volume sampled is at least 4 L. Prime or load the inhalation powder according to the labeled instructions. With the vacuum pump running and the two-way solenoid valve closed, insert the product's mouthpiece, held horizontally, into the induction port mouthpiece adapter. Discharge the powder into the apparatus by activating the timer and opening the two-way solenoid valve for the required duration, *T* ± 5%. After the two-way solenoid valve has closed, remove the product from the mouthpiece adapter. If additional doses are required for the sample, reload the inhalation powder according to the labeled instructions, reinsert the mouthpiece into the mouthpiece adapter, and repeat the operation until the required number of doses has been discharged. After discharge of the last dose, switch off the vacuum pump.

Dismantle the filter stage of *Apparatus 4*. Carefully remove the filter (*Figure 10b*), and extract the drug with solvent. Rinse the mouthpiece adapter and induction port with a suitable solvent, and quantitatively dilute to an appropriate volume. Rinse the inside of the inlet jet tube to Stage 1 (*Figure 10*), allowing the solvent to flow into the stage. Rinse the drug from the inner walls and the collection plate of each of the four upper stages of the apparatus into the solution in the respective stage by tilting and rotating the apparatus while ensuring that no liquid transfer occurs between the stages. Using the method of analysis specified in the individual monograph, determine the mass of drug collected in each of the six volumes of solvent. Ensure that the method corrects for possible evaporation of the solvent during the test. This may involve the use of an internal standard (of known original concentration in the solvent and assayed at the same time as the drug) or the quantitative transfer of the liquid contents from each of the stages, followed by dilution to a known volume. Using the method of analysis specified in the individual monograph, determine the mass of drug collected in each of the samples.

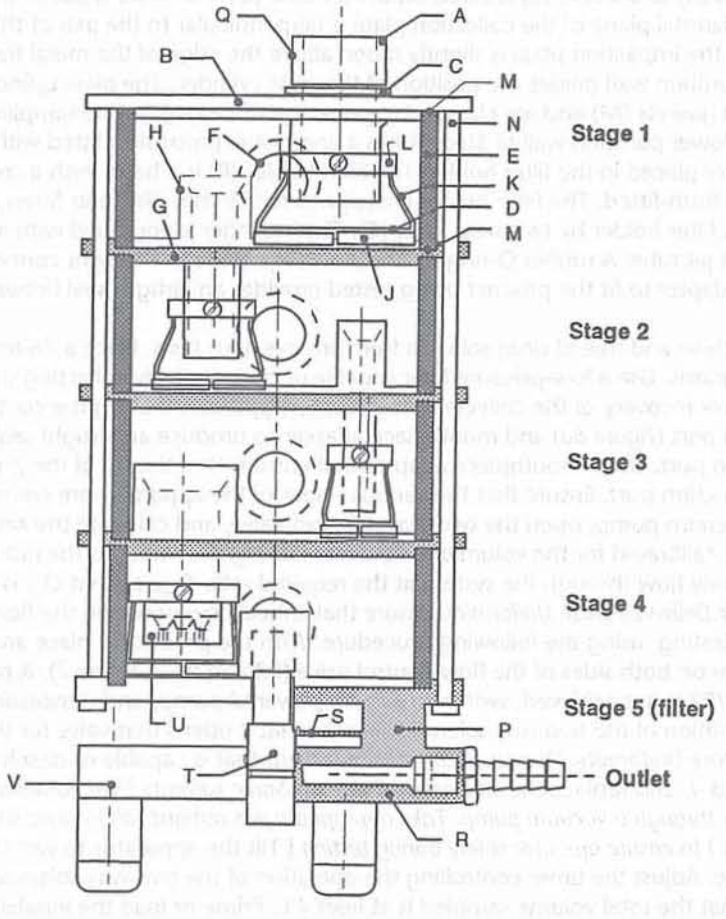

Figure 10. Apparatus 4: Schematic of multistage liquid impinger. (See *Table 7* for component specifications.)

Table 7. Component Units of Multistage Liquid Impinger
(see *Figure 10*, *Figure 10a*, and *Figure 10b*)

Code	Item	Description	Dimensions (in mm unless otherwise stated)
A, H	Jet tube	Metal tube screwed onto partition wall sealed by gasket (C), polished inner surface	See *Figure 10a*
B, G	Partition wall	Circular metal plate, diameter	120
		Thickness	See *Figure 10a*
C	Gasket	e.g., PTFE	To fit jet tube
D	Impaction plate	Porosity O sintered-glass disk	
		Diameter	See *Figure 10a*
E	Glass cylinder	Plane polished cut glass tube	
		Height, including gaskets	46
		Outer diameter	100
		Wall thickness	3.5
		Sampling port (F) diameter	18
		Stopper in sampling port	ISO 24/25
J	Metal frame	L-Profiled circular frame with slit	
		Inner diameter	To fit impaction plate
		Height	4
		Thickness of horizontal section	0.5
		Thickness of vertical section	2
K	Wire	Steel wire interconnecting metal frame and sleeve (two for each frame)	

Table 7. Component Units of Multistage Liquid Impinger
(see *Figure 10*, *Figure 10a*, and *Figure 10b*) *(Continued)*

Code	Item	Description	Dimensions (in mm unless otherwise stated)
		Diameter	1
L	Sleeve	Metal sleeve secured on jet tube by screw	
		Inner diameter	To fit jet tube
		Height	6
		Thickness	5
M	Gasket	e.g., silicone	To fit glass cylinder
N	Bolt	Metal bolt with nut (six pairs), length	205
		Diameter	4
P	O-ring	Rubber O-ring, diameter × thickness	66.34 × 2.62
Q	O-ring	Rubber O-ring, diameter × thickness	29.1 × 1.6
R	Filter holder	Metal housing with stand and outlet	See *Figure 10b*
S	Filter support	Perforated sheet metal, diameter	65
		Hole diameter	3
		Distance between holes (center-points)	4
T	Snap-locks		
U	Multi-jet tube	Jet tube (H) ending in multi-jet arrangement	See inserts *Figure 10a*
V	Outlet	Outlet and nozzle for connection to vacuum	Internal diameter ≥10 *(Figure 10b)*

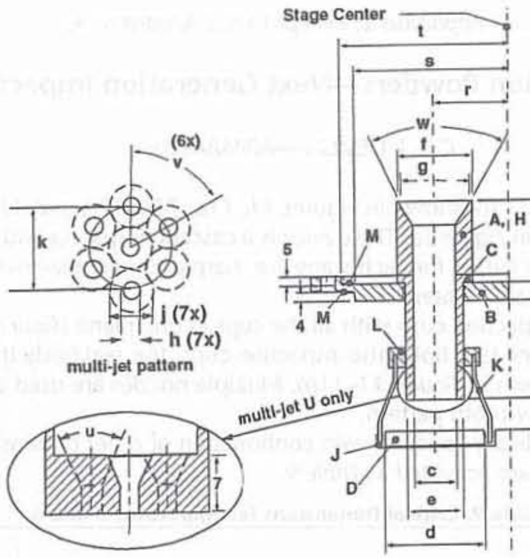

Figure 10a. Apparatus 4: Details of jet tube and impaction plate. Inserts show end of multi-jet tube (U) leading to Stage 4. (See *Table 8* for dimension specifications.)

Table 8. Apparatus 4—Dimensions of Multi-stage Liquid Impinger

Stage	Number of Nozzles	Diameter (mm)	
		Nominal Value	Tolerance (±)
1	1	25.0	0.1[a]
2	1	14.0	0.1[a]
3	1	8.0	0.1[a]

[a] Courtesy of Copley Scientific Ltd,. Nottingham, UK.

Table 8. Apparatus 4—Dimensions of Multi-stage Liquid Impinger *(Continued)*

Stage		Number of Nozzles	Diameter (mm)	
4	Inlet	7	6.3[a]	0.1[a]
	Outlet		2.7[a]	0.05[a]

[a] Courtesy of Copley Scientific Ltd,. Nottingham, UK.

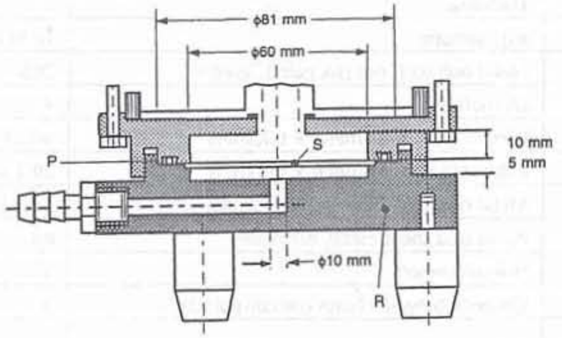

Figure 10b. Apparatus 4: Expanded view of Stage 5. (See *Table 7* for component specifications.)

C.5.2 PROCEDURE—APPARATUS 4

Proceed as directed in the *Procedure* under *Apparatus 2*, except to use *Apparatus 4*.

C.6 Apparatus 5 for Inhalation Powders—Next Generation Impactor (with pre-separator)

C.6.1 DESIGN—APPARATUS 5

The design and assembly of *Apparatus 5*[5] are shown in Figures *11, 11a, 11b, 11c,* and *11d.* The induction port used to connect the impactor to a product is shown in *Figure 6a.* The device is a cascade impactor with seven stages and a micro-orifice collector (MOC). The collection efficiency curves for each stage are sharp and minimize overlap between stages. Material can be aluminum, stainless steel, or other suitable material.

The impactor layout has removable impaction cups with all the cups in one plane (*Figures 11–11c*). There are three main sections to the impactor: the bottom frame that holds the impaction cups, the seal body that holds the jets, and the lid that contains the interstage passageways (shown in *Figures 11–11b*). Multiple nozzles are used at all but the first stage (*11c*). The flow passes through the impactor in a saw-tooth pattern.

Stage mensuration is performed periodically together with confirmation of other dimensions critical to the effective operation of the impactor. Critical dimensions are provided in *Table 9.*

Table 9. Critical Dimensions for Apparatus 5 and 6

Description	Dimension (mm)
Pre-separator (see *Dimension a* in *Figure 11d*)	12.80 ± 0.05
Stage 1[a] nozzle diameter	14.30 ± 0.05
Stage 2[a] nozzle diameter	4.88 ± 0.04
Stage 3[a] nozzle diameter	2.185 ± 0.02
Stage 4[a] nozzle diameter	1.207 ± 0.01
Stage 5[a] nozzle diameter	0.608 ± 0.01
Stage 6[a] nozzle diameter	0.323 ± 0.01
Stage 7[a] nozzle diameter	0.206 ± 0.01

[a] See *Figure 11c.* MOC = Micro-orifice collector.
[b] See *Figure 11b.*

[5] The cascade impactor is available as Next Generation Pharmaceutical Impactor from MSP Corporation, Minneapolis, MN.

Table 9. Critical Dimensions for Apparatus 5 and 6 *(Continued)*

MOC[a]	Approximately 0.070
Optional cup depth (see *Dimension b* in *Figure 11b*)	14.625 ± 0.10
Collection cup surface roughness	0.5–2 µm
Stage 1 nozzle to seal body distance (see *Dimension c*)[b]	0 ± 1.18
Stage 2 nozzle to seal body distance (see *Dimension c*)[b]	5.236 ± 0.736
Stage 3 nozzle to seal body distance (see *Dimension c*)[b]	8.445 ± 0.410
Stage 4 nozzle to seal body distance (see *Dimension c*)[b]	11.379 ± 0.237
Stage 5 nozzle to seal body distance (see *Dimension c*)[b]	13.176 ± 0.341
Stage 6 nozzle to seal body distance (see *Dimension c*)[b]	13.999 ± 0.071
Stage 7 nozzle to seal body distance (see *Dimension c*)[b]	14.000 ± 0.071
Optional: MOC nozzle to seal body distance[b]	14.429–14.571

[a] See *Figure 11c*. MOC = Micro-orifice collector.
[b] See *Figure 11b*.

In routine operation, the seal body and lid are held together as a single assembly. The impaction cups are accessible when this assembly is opened at the end of a product test. The cups are held in a support tray so that all cups can be removed from the impactor simultaneously by lifting out the tray.

An induction port with internal dimensions identical to those defined in *Figure 6a* is connected to the impactor inlet. When necessary with inhalation powders, a pre-separator can be added to avoid overloading the first stage. This pre-separator connects between the induction port and the impactor. A suitable mouthpiece adapter is used to provide an airtight seal between the product's mouthpiece and the induction port.

The apparatus contains a terminal MOC that for most formulations may eliminate the need for a final filter if this capability is demonstrated by method validation. The MOC is an impactor nozzle plate and collection cup. The nozzle plate contains, nominally, 4032 jets, each approximately 70 µm in diameter. Most particles not captured on Stage 7 of the impactor will be captured on the cup surface below the MOC. There is an optional filter holder that can replace the MOC for formulations with a significant fraction of particles not captured by the MOC. Alternatively, an after-filter (glass fiber is often suitable) can be placed in a filter holder external to *Apparatus 5* and *6*, which is located downstream of the MOC.

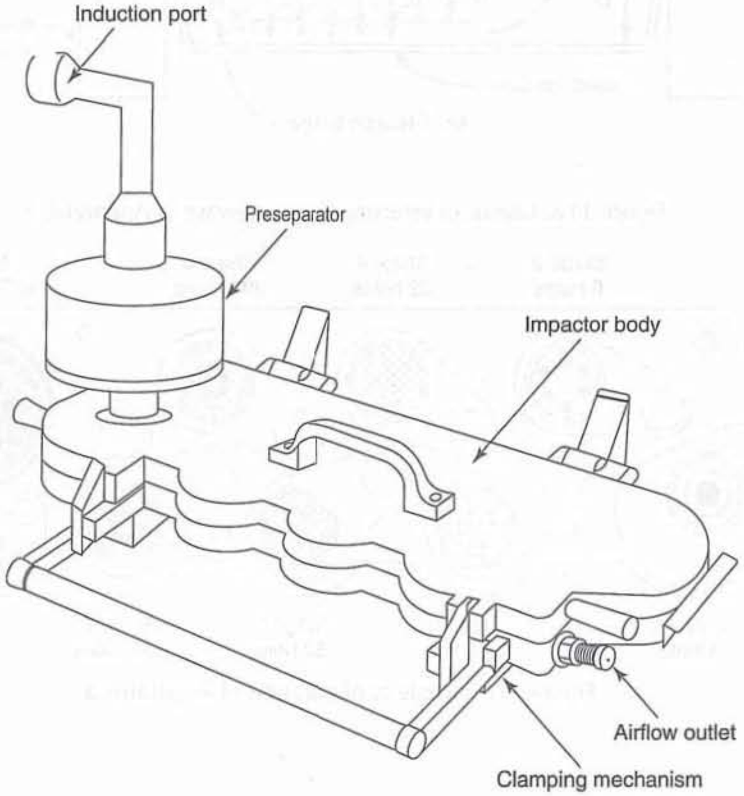

Figure 11. Apparatus 5 (shown with the pre-separator in place).

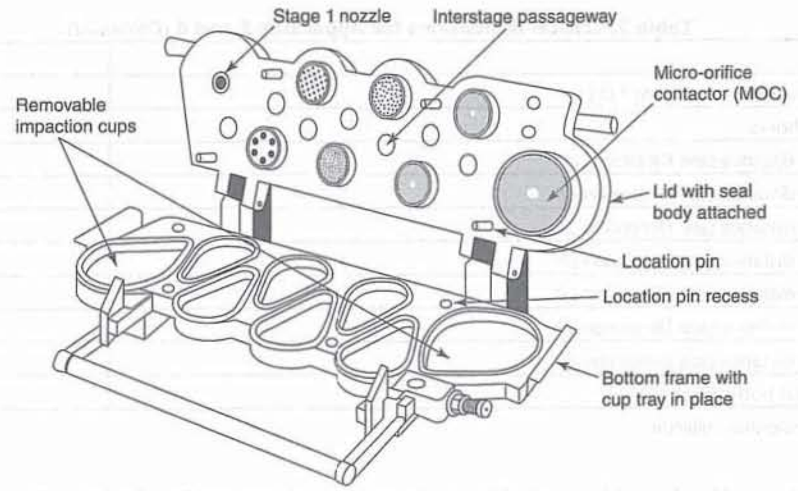

Figure 11a. Components of Apparatus 5.

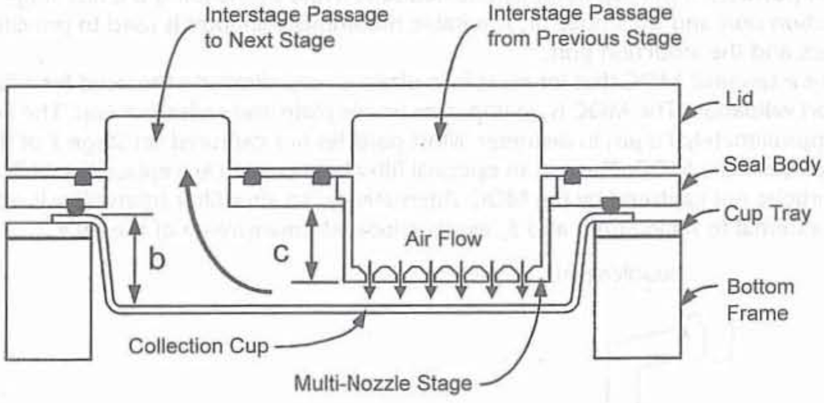

Figure 11b. Layout of interstage passageways of Apparatus 5.

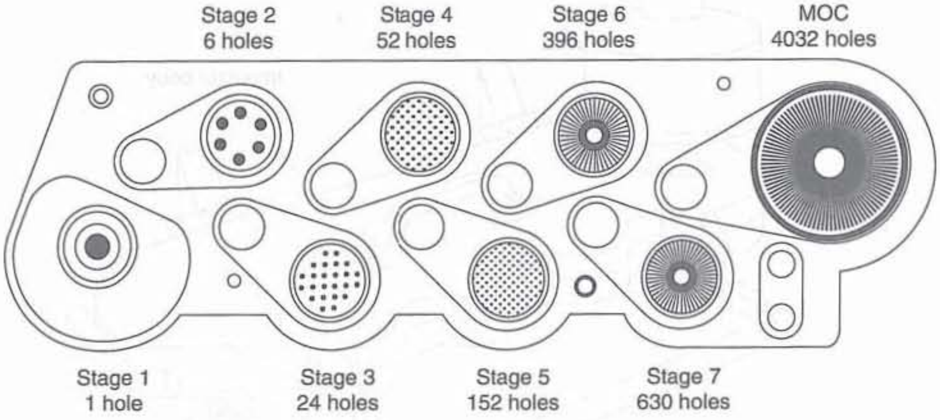

Figure 11c. Nozzle configuration of Apparatus 5.

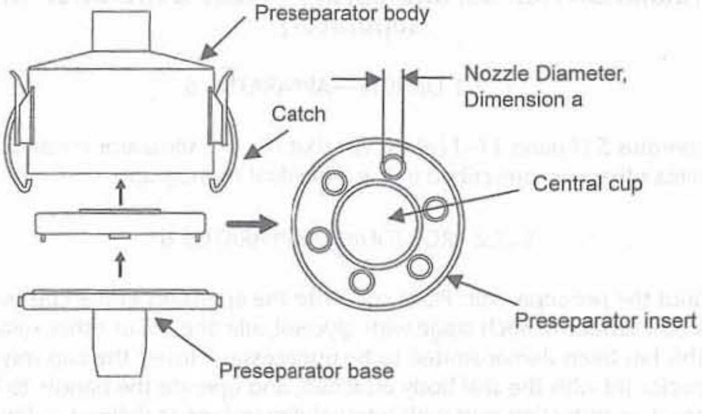

Figure 11d. Pre-separator layout for Apparatus 5.

C.6.2 PROCEDURE—APPARATUS 5

Assemble the apparatus with the pre-separator (*Figure 11d*) unless experiments have shown that its omission does not result in increased interstage drug losses (>5%) or particle re-entrainment, in which case the pre-separator can be omitted. Place cups into the apertures in the cup tray. To ensure efficient particle capture, coat the particle collection surface of each stage with glycerol, silicone oil, or other suitable liquid typically deposited from a volatile solvent, unless it has been demonstrated to be unnecessary. Insert the cup tray into the bottom frame, and lower into place. Close the impactor lid with the seal body attached, and operate the handle to lock the impactor together so that the system is airtight.

The pre-separator can be assembled as follows. Assemble the pre-separator insert into the pre-separator base; fit the pre-separator base to the impactor inlet; add up to about 15 mL of the solvent used for sample recovery to the central cup of the pre-separator insert; place the pre-separator body on top of this assembly; and close the two catches. [*Caution—Some solvents form flammable vapor–air mixtures that can be ignited during passage through a vacuum pump. Take appropriate precautions (e.g., alternative solvents, use of vapor traps, minimal pump operating times, etc.) to ensure operator safety during testing.*]

Connect an induction port with internal dimensions as defined in *Figure 6a* either to the impactor inlet or to the pre-separator inlet atop the cascade impactor (*Figure 11d*). Place a suitable mouthpiece adapter in position at the end of the induction port so that the mouthpiece end of the product, when inserted, lines up along the horizontal axis of the induction port. The front face of the product's mouthpiece is flush with the front face of the induction port, producing an airtight seal. When attached to the mouthpiece adapter, the product should be positioned in the same orientation as intended for use. Connect the apparatus to a flow system according to the scheme specified in *Figure 7*.

Unless otherwise prescribed, conduct the test at the flow rate used in the test for *Delivered-Dose Uniformity* drawing 4.0 L of air from the mouthpiece of the product and through the apparatus. Connect a flowmeter to the induction port. Use a flowmeter calibrated for the volumetric flow leaving the meter, or calculate the volumetric flow leaving the meter (Q_{out}) using the ideal gas law. For a meter calibrated for the entering volumetric flow (Q_{in}), calculate:

$$Q_{out} = Q_{in}P_0/(P_0 - \Delta P)$$

P_0 = atmospheric pressure
ΔP = pressure drop over the meter

Adjust the flow-control valve to achieve steady flow through the system at the required rate, Q_{out} (±5%). Ensure that critical flow occurs in the flow-control valve by the *Procedure* described for *Apparatus 2*. Adjust the timer controlling the operation of the two-way solenoid valve so that it opens this valve for a duration such that the total volume sampled is at least 4 L.

Prime or load the inhalation powder according to the labeled instructions. With the vacuum pump running and the two-way solenoid valve closed, insert the product's mouthpiece, held horizontally, into the induction port mouthpiece adapter. Discharge the powder into the apparatus by activating the timer and opening the two-way solenoid valve for the required duration, *T* (±5%). After the two-way solenoid valve has closed, remove the product from the mouthpiece adapter. If additional doses are required for the sample, reload the inhalation powder according to the labeled instructions, reinsert the mouthpiece into the mouthpiece adapter, and repeat the operation until the required number of doses have been discharged. After discharge of the last dose, switch off the vacuum pump.

Dismantle the apparatus, and recover drug for analysis as follows. Remove the induction port and mouthpiece adapter from the pre-separator, and extract the drug into an aliquot of solvent; if used, remove the pre-separator from the impactor without spilling the solvent into the impactor; and recover the active ingredient from all inner surfaces. Open the impactor by releasing the handle and lifting the lid. Remove the cup tray, with the collection cups, and recover the active ingredient from each cup into an aliquot of solvent. Using the method of analysis specified in the individual monograph, determine the mass of drug contained in each of the aliquots of solvent.

C.7 Apparatus 6 for Inhalation Aerosol and Sprays—Next Generation Impactor (without pre-separator)

C.7.1 DESIGN—APPARATUS 6

Apparatus 6 is identical to *Apparatus 5* (*Figures 11–11d*) except that the pre-separator is not used. Use this apparatus at a flow rate of 30 L/min (±5%) unless otherwise prescribed in the individual monograph.

C.7.2 PROCEDURE—APPARATUS 6

Assemble the apparatus without the pre-separator. Place cups into the apertures in the cup tray. To ensure efficient particle capture, coat the particle collection surface of each stage with glycerol, silicone oil, or other suitable liquid typically deposited from a volatile solvent, unless this has been demonstrated to be unnecessary. Insert the cup tray into the bottom frame, and lower into place. Close the impactor lid with the seal body attached, and operate the handle to lock the impactor together so that the system is airtight. Connect an induction port with internal dimensions as defined in *Figure 6a* to the impactor inlet. Use a mouthpiece adapter that ensures that the tip of the product's mouthpiece is flush with the open end of the induction port. Turn on the vacuum pump to draw air through the cascade impactor, and calibrate the airflow through the system with an appropriate flowmeter attached to the open end of the induction port. Adjust the flow-control valve on the vacuum pump to achieve steady flow through the system at the required rate, and ensure that the airflow through the system is within ±5% of this flow rate. Unless otherwise prescribed in the patient instructions, shake the product for 5 s, and discharge one delivery to waste. With the vacuum pump running, insert the mouthpiece into the mouthpiece adapter, and immediately fire the minimum recommended dose into the cascade impactor. Keep the valve depressed for a duration sufficient to ensure that the dose has been completely discharged. If additional sprays are required for the sample, shake the product, reinsert it into the mouthpiece adapter, and immediately fire the next minimum recommended dose.

Repeat until the required number of doses has been discharged. The number of minimum recommended doses discharged must be sufficient to ensure an accurate and precise determination of *Aerodynamic Size Distribution*. [NOTE—The number of minimum recommended doses typically is not >10.] After the last dose has been discharged, remove the product from the mouthpiece adapter. Rinse the mouthpiece adapter and induction port with a suitable solvent, and dilute quantitatively to an appropriate volume.

Dismantle the apparatus, and recover the drug for analysis as follows. Remove the induction port and mouthpiece adapter from the apparatus, and recover the deposited drug into an aliquot of solvent; open the impactor by releasing the handle and lifting the lid; remove the cup tray with the collection cups; and extract the active ingredient in each cup into an aliquot of solvent. Using the method of analysis specified in the individual monograph, determine the quantity of active ingredient contained in each of the aliquots of solvent.

⟨602⟩ PROPELLANTS

Caution—Hydrocarbon propellants are highly flammable and explosive. Observe precautions, and perform sampling and analytical operations in a well-ventilated fume hood.

GENERAL SAMPLING PROCEDURE

This procedure is used to obtain test specimens for those propellants that occur as gases at about 25° and that are stored in pressurized cylinders. Use a stainless steel sample cylinder equipped with a stainless steel valve with a capacity of NLT 200 mL and a pressure rating of 240 psi or more. Dry the cylinder with the valve open at 110° for 2 h, and evacuate the hot cylinder to less than 1 mm of mercury. Close the valve, cool, and weigh. Connect one end of a charging line tightly to the propellant container and the other end loosely to the sample cylinder. Carefully open the propellant container, and allow the propellant to flush out the charging line through the loose connection. Avoid excessive flushing, which causes moisture to freeze in the charging line and connections. Tighten the fitting on the sample cylinder, and open the sample cylinder valve, allowing the propellant to flow into the evacuated cylinder. Continue sampling until the desired amount of specimen is obtained, then close the propellant container valve, and finally close the sample cylinder valve. [*Caution—Do not overload the sample cylinder. Hydraulic expansion due to temperature change can cause overloaded cylinders to explode.*] Again weigh the charged sample cylinder, and calculate the weight of the specimen.

General Chapters

APPROXIMATE BOILING TEMPERATURE

Transfer a 100-mL specimen to a tared, pear-shaped, 100-mL centrifuge tube containing a few boiling stones, and weigh. Suspend a thermometer in the liquid, and place the tube in a medium maintained at a temperature of 32° above the expected boiling temperature. When the thermometer reading becomes constant, record as the boiling temperature the thermometer reading after at least 5% of the specimen has distilled. Retain the remainder of the specimen for the determination of high-boiling residues.

HIGH-BOILING RESIDUES, METHOD I

Allow 85 mL of the specimen to distill as directed in the test for *Approximate Boiling Temperature*, and transfer the centrifuge tube containing the remaining 15 mL of specimen to a medium maintained at a temperature 10° above the boiling temperature. After 30 min, remove the tube from the water bath, blot dry, and weigh. Calculate the weight of the residue.

HIGH-BOILING RESIDUES, METHOD II

Prepare a cooling coil from copper tubing (about 6 mm outside diameter × about 6.1 m long) to fit into a vacuum-jacketed flask. Immerse the cooling coil in a mixture of dry ice and acetone in a vacuum-jacketed flask, and connect one end of the tubing to the propellant sample cylinder. Carefully open the sample cylinder valve, flush the cooling coil with about 50 mL of the propellant, and discard this portion of liquefied propellant. Continue delivering liquefied propellant from the cooling coil, and collect it in a previously chilled 1000-mL sedimentation cone until the cone is filled to the 1000-mL mark. Allow the propellant to evaporate, using a warm water bath maintained at about 40° to reduce evaporating time. When all of the liquid has evaporated, rinse the sedimentation cone with two 50-mL portions of pentane, and combine the rinsings in a tared 150-mL evaporating dish. Transfer 100 mL of the pentane solvent to a second tared 150-mL evaporating dish, place both evaporating dishes on a water bath, evaporate to dryness, and heat the dishes in an oven at 100° for 60 min. Cool the dishes in a desiccator, and weigh. Repeat the heating for 15-min periods until successive weighings are within 0.1 mg, and calculate the weight of the residue obtained from the propellant as the difference between the weights of the residues in the two evaporating dishes.

WATER CONTENT

Proceed as directed in *Water Determination* ⟨921⟩, with the following modifications: (a) Provide the closed-system titrating vessel with an opening through which passes a coarse-porosity gas dispersion tube connected to a sampling cylinder. (b) Dilute the *Reagent* with anhydrous methanol to give a water equivalence factor of between 0.2 and 1.0 mg/mL, and age this diluted solution for NLT 16 h before standardization. (c) Obtain a 100-g specimen as directed under *General Sampling Procedure*, and introduce the specimen into the titration vessel through the gas dispersion tube at a rate of about 100 mL of gas per min. If necessary, heat the sample cylinder gently to maintain this flow rate.

OTHER DETERMINATIONS

For those aerosols that use propellants, perform the tests specified in the individual *NF* propellant monographs.

⟨603⟩ TOPICAL AEROSOLS

INTRODUCTION

Topical aerosol products contain the drug in solution or in suspension, packaged under pressure, and released upon activation of an appropriate valve system. The topical aerosol products should follow the product quality test requirements described in general test chapters *Inhalation and Nasal Drug Products—General Information and Product Quality Tests* ⟨5⟩, *Microbial Enumeration Tests* ⟨61⟩, *Tests for Specified Organisms* ⟨62⟩, *Minimum Fill* ⟨755⟩, and *Leak Rate* ⟨604⟩. The topical aerosols include dermatological foams and sprays. Topical aerosol foams should include a physical appearance of both the foam and also of the collapsed foam.

DELIVERY RATE AND DELIVERED AMOUNT

Perform these tests only on containers fitted with continuous valves.

General Chapters

Delivery Rate: Select NLT four aerosol containers; shake, if the label includes this directive; remove the caps and covers; and actuate each valve for 2–3 s. Weigh each container accurately, and immerse in a constant-temperature bath until the internal pressure is equilibrated at a temperature of 25° as determined by constancy of internal pressure, as directed under the *Pressure Test* below. Remove the containers from the bath; remove excess moisture by blotting with a paper towel; shake, if the label includes this directive; actuate each valve for 5.0 s (accurately timed by use of a stopwatch); and weigh each container again. Return the containers to the constant-temperature bath, and repeat the foregoing procedure three times for each container. Calculate the average *Delivery Rate*, in g/s, for each container.

Delivered Amount: Return the containers to the constant-temperature bath, continuing to deliver 5 s actuations to waste, until each container is exhausted. [NOTE—Ensure that sufficient time is allowed between each actuation to avoid significant canister cooling.] Calculate the total weight loss from each container. This is the *Delivered Amount*.

PRESSURE TEST

Perform this test only on topical aerosols fitted with continuous valves.

Select NLT four aerosol containers, remove the caps and covers, and immerse in a constant-temperature bath until the internal pressure is constant at a temperature of 25°. Remove the containers from the bath, shake, and remove the actuator and water, if any, from the valve stem. Place each container in an upright position, and determine the pressure in each container by placing a calibrated pressure gauge on the valve stem, holding firmly, and actuating the valve so that it is fully open. The gauge is of a calibration approximating the expected pressure and is fitted with an adapter appropriate for the particular valve stem dimensions. Read the pressure directly from the gauge.

MINIMUM FILL

Topical aerosols meet the requirements for aerosols in *Minimum Fill* ⟨755⟩.

LEAKAGE TEST

Proceed as directed in *Leak Rate* ⟨604⟩.

NUMBER OF DISCHARGES PER CONTAINER

Perform this test only on topical aerosols fitted with dose-metering valves, at the same time as, and on the same containers used for, the test for *Delivered-Dose Uniformity*. Determine the number of discharges or deliveries by counting the number of priming discharges plus those used in determining the spray contents, and continue to fire until the label claim number of discharges. The requirements are met if all the containers or inhalers tested contain NLT the number of discharges stated on the label.

DELIVERED-DOSE UNIFORMITY

The test for *Delivered-Dose Uniformity* is required for topical aerosols fitted with dose-metering valves. For collection of the minimum dose, proceed as directed in the test for *Delivered Dose Uniformity* in *Metered-Dose Inhalers and Dry Powder Inhalers*, as described in ⟨601⟩, except modify the dose sampling apparatus so that it is capable of quantitatively capturing the delivered dose from the preparation being tested. Unless otherwise stated in the individual monograph, apply the acceptance criteria for *Metered-Dose Inhalers and Dry Powder Inhalers* as described in ⟨601⟩.

⟨604⟩ LEAK RATE

Select 12 aerosol containers, and record the date and time to the nearest half hour. Weigh each container to the nearest mg, and record the weight, in mg, of each as W_1. Allow the containers to stand in an upright position at a temperature of 25.0 ± 2.0° for not less than 3 days, and again weigh each container, recording the weight, in mg, of each as W_2 and recording the date and time to the nearest half hour. Determine the time, T, in hours, during which the containers were under test. Calculate the leakage rate, in mg per year, of each container taken by the formula: $(365)(24/T)(W_1 - W_2)$.

Where plastic-coated glass aerosol containers are tested, dry the containers in a desiccator for 12–18 h, and allow them to stand in a constant-humidity environment for 24 h prior to determining the initial weight as indicated above. Conduct the test under the same constant-humidity conditions. Empty the contents of each container tested by employing any safe technique (e.g., chill to reduce the internal pressure, remove the valve, and pour). Remove any residual contents by rinsing with suitable solvents, then rinse with a few portions of methanol. Retain as a unit the container, the valve, and all associated parts, and

heat them at 100° for 5 min. Cool, weigh, record the weight as W_3, and determine the net fill weight ($W_1 - W_3$) for each container tested. [NOTE—If the average net fill weight has been determined previously, that value may be used in place of the value ($W_1 - W_3$) above.] The requirements are met if the average leakage rate per year for the 12 containers is not more than 3.5% of the net fill weight, and none of the containers leaks more than 5.0% of the net fill weight per year. If 1 container leaks more than 5.0% per year, and if none of the containers leaks more than 7.0% per year, determine the leakage rate of an additional 24 containers as directed herein. Not more than 2 of the 36 containers leak more than 5.0% of the net fill weight per year, and none of the 36 containers leaks more than 7.0% of the net fill weight per year. Where the net fill weight is less than 15 g and the label bears an expiration date, the requirements are met if the average leakage rate of the 12 containers is not more than 525 mg per year and none of the containers leaks more than 750 mg per year. If 1 container leaks more than 750 mg per year but not more than 1.1 g per year, determine the leakage rate of an additional 24 containers as directed herein. Not more than 2 of the 36 containers leak more than 750 mg per year, and none of the 36 containers leaks more than 1.1 g per year. This test is in addition to the customary in-line leak testing of each container.

⟨610⟩ ALTERNATIVE MICROBIOLOGICAL SAMPLING METHODS FOR NONSTERILE INHALED AND NASAL PRODUCTS

INTRODUCTION

Proper microbiological sampling of microbiologically susceptible nonsterile products can be difficult because these products are often filled into unique primary containers that are designed to protect the product from inadvertent contamination during storage and use. These unique designs may increase the difficulty of taking an aseptic sample of sufficient size or volume for microbiological testing. Unless special approaches are used, products such as inhaled, nasal liquid, or powder dosage forms can be difficult to sample without potential exposure to extraneous microbial contamination. This general test chapter provides these special approaches for sampling either low- or high-content inhaled or nasal dosage forms. Alternative sampling approaches may provide better ways to sample containers in an aseptic manner. Any alternative methodology should employ aseptic techniques and should be conducted under environmental and other conditions that are appropriate for aseptic sampling.

INHALED OR NASAL DOSAGE FORMS

Low-content inhaled and nasal drug products (low-content INDP) are products that have a target fill of less than 100 mg of powder or 1 mL of liquid formulation per unit (primary container). Examples are pre-metered inhalation powders, more commonly known as dry powder inhalers (DPIs), and single-dose nasal sprays.

High-content INDP are multidose drug products that have a target fill of more than 100 mg of powder or more than 1 mL of liquid formulation per unit. Examples are aerosols for inhalation and nasal delivery, known as metered-dose inhalers (MDIs); device-metered inhalation powders; and multidose nasal sprays.

The appropriate sample quantity or volume should be based on the test methodology, including any relevant general test chapters, such as ⟨61⟩ *Microbiological Examination of Nonsterile Products: Microbial Enumeration Tests* and ⟨62⟩ *Microbiological Examination of Nonsterile Products: Tests for Specified Microorganisms*. Testing may be performed on the unpackaged bulk dry powder or liquid formulation or the finished product. If testing is performed on the bulk material alone, then the process leading from the bulk to the finished product should be validated for its ability to prevent microbial contamination. Testing should be performed on the finished product if this process is not validated.

SAMPLE SIZE DETERMINATION

For each microbiological test, sample 10 drug product containers or units or a number of units that can provide a minimum of 1 gram of product that are representative of the batch. For batch sizes smaller than 200 units (e.g., batches used in clinical trials), sample size may be reduced to 1% of the units or 1 unit, whichever is greater. The contents of individual containers may be pooled for testing.

Bulk Testing for Low-Content INDP

Bulk lot testing may be preferable for low-content INDP in lieu of finished product testing to allow larger sample sizes that are representative of the batch, without unduly increasing the risk of inadvertent microbial contamination. Bulk testing can be performed on the bulk powder or liquid formulation just before filling. If bulk testing is performed in lieu of finished product testing, then manufacturing processes following bulk sampling (e.g., filling and packaging) must be validated in accordance

with current good manufacturing practice (CGMP) for their ability to prevent microbial contamination. For microbial enumeration tests, at least 10 g or 10 mL of bulk material, or, for specified microorganisms tests, 1 g or 1 mL of bulk material may be sampled. For small batch sizes (i.e., less than 1000 g or 1000 mL), the recommended sample size is 1% of the batch for both microbial enumeration and specified microorganisms tests.

SAMPLING METHODS FOR HIGH-CONTENT INDP

Dry Powder Inhalers

DPIs have an internal reservoir that contains a sufficient quantity of formulation for multiple doses that are metered by the device itself during activation by the patient. For DPIs, appropriate validated procedures should be used to sample a nonsterile drug product container.

Inhalation Aerosols

Consider safety issues related to both inhalation of the drug substance and the potential of a flammability hazard. Avoid contamination of samples by employing aseptic techniques whenever necessary.

AUTOMATIC ACTUATION METHOD

The contents of the inhalation aerosol containers may be collected by automatically actuating each aerosol container and collecting the delivered formulation on a suitable sterile filter.

ROOM TEMPERATURE METHOD

Disinfect the outside of the test containers with an appropriate disinfectant, and allow the containers to dry in a controlled environment. Empty the contents of the aerosol container into a sterile vessel using a needle apparatus or similar device (e.g., icemaker water line tap). If it has been demonstrated that the propellant does not inhibit the growth of microorganisms, the contents of the sterile vessel may be added directly to the liquid media or buffer for the test. Otherwise, allow the propellant to evaporate from the vessel by leaving the vessel at room temperature for several minutes. Remove any residual gaseous propellant by tilting the vessel slightly or by allowing a slow stream of microbiologically inert sterile gas to pass over the surface. For some less volatile propellants such as chlorofluorocarbon (CFC) 11/12 combinations, the vessel may be heated slightly (to temperatures ≤ 45°) to assist with evaporation. After the propellant has evaporated, add the liquid media or buffer, and mix the contents to prepare for testing.

Direct expulsion into the broth media or buffer may be feasible if a needle apparatus that is thin and strong enough to puncture the container and to allow slow removal of the contents is available. In this case, the contents may be expelled into and mixed with the aqueous medium. Layering of the propellant and aqueous medium may occur, in which case a longer time period and slight heating (not to exceed 45°) may be required for propellant evaporation.

CHILLING METHOD

Place the disinfected aerosol containers in dry ice, or a dry ice slurry (ensure the microbial quality of the dry ice and slurry-forming liquid), or a cryofreezer for the period required to liquefy the contents. Disinfect the outside of the test containers with an appropriate disinfectant, and allow the containers to dry in an aseptic environment. Aseptically open the aerosol containers using an appropriate tool. Be aware that freezing can affect the viability of microorganisms. For CFC-based products, pour the contents of the containers into sterile vessels. Allow the propellant to escape, and combine residues with a diluent appropriate for the drug product. Other drug-specific procedures may also be employed. For hydrofluoroalkane-based products, pour the contents of the containers into sterile vessels partially immersed in larger vessels containing dry ice. Drive off the propellant, for example by allowing a slow stream of sterile, filtered, oil-free compressed air to evaporate the material to dryness. Combine residues with a diluent appropriate for the drug product. An alternative procedure when testing the entire contents of a previously chilled container is to pour the contents of the opened container onto a sterile membrane filtration unit, allow the propellant to escape, and then rinse with an appropriate amount of sterile diluent.

Multidose Nasal Sprays

Multidose nasal spray containers usually have a cap that is screwed on, crimped on, or forms a snap-fit. The container can be opened by unscrewing the cap, cutting the seal, or using a decrimping tool, taking care to avoid microbial contamination during the process. Following cap removal, traditional sampling methods as described in general test chapters such as ⟨61⟩ *Microbiological Examination of Nonsterile Products: Microbial Enumeration Tests* and ⟨62⟩ *Microbiological Examination of Nonsterile Products: Tests for Specified Microorganisms* are typically appropriate for use.

⟨611⟩ ALCOHOL DETERMINATION

PROCEDURES

Method I—Distillation Method

Method I is to be used for the determination of alcohol, unless otherwise specified in the individual monograph. It is suitable for examining most fluidextracts and tinctures, provided the capacity of the distilling flask is sufficient (commonly two to four times the volume of the liquid to be heated) and the rate of distillation is such that clear distillates are produced. Cloudy distillates may be clarified by agitation with talc, or with calcium carbonate, and filtered, after which the temperature of the filtrate is adjusted and the alcohol content determined from the specific gravity. During all manipulations, take precautions to minimize the loss of alcohol by evaporation.

Treat liquids that froth to a troublesome extent during distillation by rendering them strongly acidic with phosphoric, sulfuric, or tannic acid, or treat with a slight excess of calcium chloride solution or with a small amount of paraffin or silicone oil before starting the distillation.

Prevent bumping during distillation by adding porous chips of insoluble material such as silicon carbide, or beads.

For liquids presumed to contain 30% of alcohol or less: By means of a pipet, transfer to a suitable distilling apparatus not less than 25 mL of the liquid in which the alcohol is to be determined, and note the temperature at which the volume was measured. Add an equal volume of water, distill, and collect a volume of distillate about 2 mL less than the volume taken of the original test liquid, adjust to the temperature at which the original test liquid was measured, add sufficient water to measure exactly the original volume of the test liquid, and mix. The distillate is clear or not more than slightly cloudy, and does not contain more than traces of volatile substances other than alcohol and water. Determine the specific gravity of the liquid at 25°, as directed under *Specific Gravity* ⟨841⟩, using this result to ascertain the percentage, by volume, of C_2H_5OH contained in the liquid examined by reference to the *Alcoholometric Table* in the section *Reference Tables*.

For liquids presumed to contain more than 30% of alcohol: Proceed as directed in the foregoing paragraph, except to do the following: dilute the specimen with about twice its volume of water, collect a volume of distillate about 2 mL less than twice the volume of the original test liquid, bring to the temperature at which the original liquid was measured, add sufficient water to measure exactly twice the original volume of the test liquid, mix, and determine its specific gravity. The proportion of C_2H_5OH, by volume, in this distillate, as ascertained from its specific gravity, equals one-half that in the liquid examined.

Special Treatment

Volatile acids and bases: Render preparations containing volatile bases slightly acidic with diluted sulfuric acid before distilling. If volatile acids are present, render the preparation slightly alkaline with sodium hydroxide TS.

Glycerin: To liquids that contain glycerin add sufficient water so that the residue, after distillation, contains not less than 50% of water.

Iodine: Treat all solutions containing free iodine with powdered zinc before the distillation, or decolorize with just sufficient sodium thiosulfate solution (1 in 10), followed by a few drops of sodium hydroxide TS.

Other volatile substances: Spirits, elixirs, tinctures, and similar preparations that contain appreciable proportions of volatile materials other than alcohol and water, such as volatile oils, chloroform, ether, camphor, etc., require special treatment, as follows:

For liquids presumed to contain 50% of alcohol or less: Mix 25 mL of the specimen under examination, accurately measured, with about an equal volume of water in a separator. Saturate this mixture with sodium chloride, then add 25 mL of solvent hexane, and shake the mixture to extract the interfering volatile ingredients. Draw off the separated, lower layer into a second separator, and repeat the extraction twice with two further 25-mL portions of solvent hexane. Extract the combined solvent hexane solutions with three 10-mL portions of a saturated solution of sodium chloride. Combine the saline solutions, and distill in the usual manner, collecting a volume of distillate having a simple ratio to the volume of the original specimen.

For liquids presumed to contain more than 50% of alcohol: Adjust the specimen under examination to a concentration of approximately 25% of alcohol by diluting it with water, then proceed as directed in *For liquids presumed to contain 50% of alcohol or less,* beginning with "Saturate this mixture with sodium chloride."

In preparing *Collodion* or *Flexible Collodion* for distillation, use water in place of the saturated solution of sodium chloride directed above.

If volatile oils are present in small proportions only, and a cloudy distillate is obtained, the solvent hexane treatment not having been employed, the distillate may be clarified and rendered suitable for the specific gravity determination by shaking it with about one-fifth its volume of solvent hexane, or by filtering it through a thin layer of talc.

Method II—Gas Chromatographic Method

Use *Method IIa* when *Method II* is specified in the individual monograph. For a discussion of the principles upon which it is based, see *Gas Chromatography* under *Chromatography* ⟨621⟩.

• **METHOD IIA**

Apparatus: Under typical conditions, use a gas chromatograph equipped with a flame-ionization detector and a 4-mm × 1.8-m glass column packed with 100- to 120-mesh chromatographic column packing support S3, using nitrogen or heli-

General Chapters

um as the carrier. Prior to use, condition the column overnight at 235° with a slow flow of carrier gas. The column temperature is maintained at 120°, and the injection port and detector temperatures are maintained at 210°. Adjust the carrier flow and temperature so that acetonitrile, the internal standard, elutes in 5 to 10 minutes.

Solutions

Test stock preparation: Dilute the specimen under examination stepwise with water to obtain a solution containing approximately 2% (v/v) of alcohol.

Test preparation: Pipet 5 mL each of the *Test stock preparation* and the USP Alcohol Determination—Acetonitrile RS [NOTE—Alternatively, a 2% aqueous solution of acetonitrile of suitable quality may be used as the internal standard solution] into a 50-mL volumetric flask, dilute with water to volume, and mix.

Standard preparation: Pipet 5 mL each of the USP Alcohol Determination—Alcohol RS and the USP Alcohol Determination—Acetonitrile RS. [NOTE—Alternatively, a 2% aqueous solution of acetonitrile of suitable quality may be used as the internal standard solution] into a 50-mL volumetric flask, dilute with water to volume, and mix.

Procedure: Inject about 5 µL each of the *Test preparation* and the *Standard preparation,* in duplicate, into the gas chromatograph, record the chromatograms, and determine the peak response ratios. Calculate the percentage of alcohol (v/v) in the specimen under test according to the formula:

$$\text{Result} = CD(R_U/R_S)$$

C = labeled concentration of USP Alcohol Determination—Alcohol RS
D = dilution factor (the ratio of the volume of the *Test stock preparation* to the volume of the specimen taken)
R_U = peak response ratio obtained from the *Test preparation*
R_S = peak response ratio obtained from the *Standard preparation*

System suitability test: In a suitable chromatogram, the resolution factor, R, is not less than 2; the tailing factor of the alcohol peak is not greater than 2.0; and six replicate injections of the *Standard preparation* show a relative standard deviation of not more than 2.0% in the ratio of the peak of alcohol to the peak of the internal standard.

• **METHOD IIB**

Apparatus: The gas chromatograph is equipped with a split injection port with a split ratio of 5:1, a flame-ionization detector, and a 0.53-mm × 30-m capillary column coated with a 3.0-µm film of phase G43. Helium is used as the carrier gas at a linear velocity of 34.0 cm per second. The chromatograph is programmed to maintain the column temperature at 50° for 5 minutes, then to increase the temperature at a rate of 10° per minute to 200°, and maintain at this temperature for 4 minutes. The injection port temperature is maintained at 210° and the detector temperature at 280°.

Solutions

Test stock preparation: Dilute the specimen under examination stepwise with water to obtain a solution containing approximately 2% (v/v) of alcohol.

Test preparation: Pipet 5 mL each of the *Test stock preparation* and the USP Alcohol Determination—Acetonitrile RS [NOTE—Alternatively, a 2% aqueous solution of acetonitrile of suitable quality may be used as the internal standard solution] into a 25-mL volumetric flask, dilute with water to volume, and mix.

Standard preparation: Pipet 5 mL each of the USP Alcohol Determination—Alcohol RS and the USP Alcohol Determination—Acetonitrile RS. [NOTE—Alternatively, a 2% aqueous solution of acetonitrile of suitable quality may be used as the internal standard solution] into a 25-mL volumetric flask, dilute with water to volume, and mix.

Procedure: Inject about 0.2 to 0.5 µL each of the *Test preparation* and the *Standard preparation,* in duplicate, into the gas chromatograph, record the chromatograms, and determine the peak response ratios. Calculate the percentage of alcohol (v/v) in the specimen under test according to the formula:

$$\text{Result} = CD(R_U/R_S)$$

C = labeled concentration of USP Alcohol Determination—Alcohol RS
D = dilution factor (the ratio of the volume of the *Test stock preparation* to the volume of the specimen taken)
R_U = peak response ratio obtained from the *Test preparation*
R_S = peak response ratio obtained from the *Standard preparation*

System suitability test: In a suitable chromatogram, the resolution factor, R, between alcohol and the internal standard is not less than 4; the tailing factor of the alcohol peak is not greater than 2.0; and six replicate injections of the *Standard preparation* show a relative standard deviation of not more than 4.0% in the ratio of the peak of alcohol to the peak of the internal standard.

ADDITIONAL REQUIREMENTS

• **USP REFERENCE STANDARDS ⟨11⟩**

USP Alcohol Determination—Acetonitrile RS
USP Alcohol Determination—Alcohol RS

⟨616⟩ BULK DENSITY AND TAPPED DENSITY OF POWDERS

BULK DENSITY

This general chapter has been harmonized with the corresponding texts of the *European Pharmacopoeia* and/or the *Japanese Pharmacopoeia*. ♦The portion that is not harmonized is marked with symbols (♦♦) to specify this fact.♦

The bulk density of a powder is the ratio of the mass of an untapped powder sample and its volume including the contribution of the interparticulate void volume. Hence, the bulk density depends on both the density of powder particles and the spatial arrangement of particles in the powder bed. The bulk density is expressed in grams per mL (g/mL) although the international unit is kilograms per cubic meter (1 g/mL = 1000 kg/m³) because the measurements are made using cylinders. It may also be expressed in grams per cubic centimeter (g/cm³). The bulking properties of a powder are dependent upon the preparation, treatment, and storage of the sample, i.e., how it was handled. The particles can be packed to have a range of bulk densities; however, the slightest disturbance of the powder bed may result in a changed bulk density. Thus, the bulk density of a powder is often very difficult to measure with good reproducibility and, in reporting the results, it is essential to specify how the determination was made. The bulk density of a powder is determined by measuring the volume of a known weight of powder sample, that may have been passed through a sieve, into a graduated cylinder (*Method I*), or by measuring the mass of a known volume of powder that has been passed through a volumeter into a cup (*Method II*) or a measuring vessel (*Method III*).

Method I and *Method III* are favored.

Method I—Measurement in a Graduated Cylinder

PROCEDURE

Pass a quantity of material sufficient to complete the test through a sieve with apertures greater than or equal to 1.0 mm, if necessary, to break up agglomerates that may have formed during storage; this must be done gently to avoid changing the nature of the material. Into a dry graduated 250-mL cylinder (readable to 2 mL) introduce, without compacting, approximately 100 g of test sample, *M*, weighed with 0.1% accuracy. Carefully level the powder without compacting, if necessary, and read the unsettled apparent volume (V_0) to the nearest graduated unit. Calculate the bulk density in g/mL by the formula m/V_0. Generally, replicate determinations are desirable for the determination of this property. If the powder density is too low or too high, such that the test sample has an untapped apparent volume of either more than 250 mL or less than 150 mL, it is not possible to use 100 g of powder sample. Therefore, a different amount of powder has to be selected as the test sample, such that its untapped apparent volume is 150–250 mL (apparent volume greater than or equal to 60% of the total volume of the cylinder); the weight of the test sample is specified in the expression of results. For test samples having an apparent volume between 50 mL and 100 mL, a 100-mL cylinder readable to 1 mL can be used; the volume of the cylinder is specified in the expression of results.

Method II—Measurement in a Volumeter

APPARATUS

The apparatus (*Figure 1*) consists of a top funnel fitted with a 1.0-mm sieve.[1] The funnel is mounted over a baffle box containing four glass baffle plates over which the powder slides and bounces as it passes. At the bottom of the baffle box is a funnel that collects the powder and allows it to pour into a cup of specified capacity mounted directly below it. The cup may be cylindrical (25.00 ± 0.05 mL volume with an inside diameter of 30.00 ± 2.00 mm) or cubical (16.39 ± 0.20 mL volume with inside dimensions of 25.400 ± 0.076 mm).

[1] The apparatus (the Scott Volumeter) conforms to the dimensions in ASTMB329-06(2012).

General Chapters

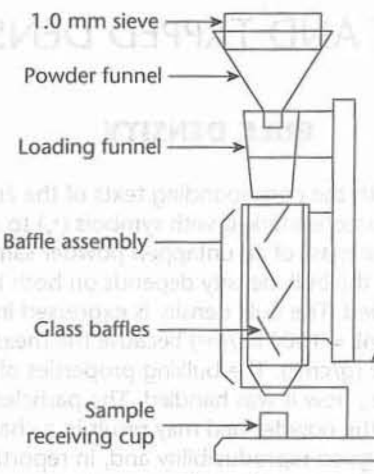

Figure 1.

Procedure—Allow an excess of powder to flow through the apparatus into the sample receiving cup until it overflows, using a minimum of 25 cm³ of powder with the square cup and 35 cm³ of powder with the cylindrical cup. Carefully scrape excess powder from the top of the cup by smoothly moving the edge of the blade of a spatula perpendicular to and in contact with the top surface of the cup, taking care to keep the spatula perpendicular to prevent packing or removal of powder from the cup. Remove any material from the sides of the cup, and determine the weight, *M*, of the powder to the nearest 0.1%. Calculate the bulk density, in g/mL, by the formula:

$$(M)/(V_0)$$

in which V_0 is the volume, in mL, of the cup. Record the average of three determinations using three different powder samples.

Method III—Measurement in a Vessel

APPARATUS

The apparatus consists of a 100-mL cylindrical vessel of stainless steel with dimensions as specified in *Figure 2*.

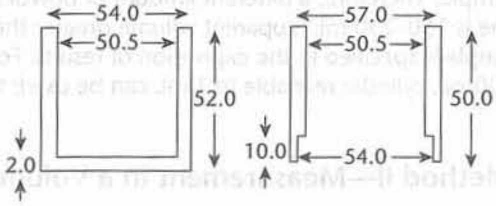

Figure 2.

PROCEDURE

Pass a quantity of powder sufficient to complete the test through a 1.0-mm sieve, if necessary, to break up agglomerates that may have formed during storage, and allow the obtained sample to flow freely into the measuring vessel until it overflows. Carefully scrape the excess powder from the top of the vessel as described for *Method II*. Determine the weight (M_0) of the powder to the nearest 0.1% by subtraction of the previously determined mass of the empty measuring vessel. Calculate the bulk density (g/mL) by the formula $M_0/100$, and record the average of three determinations using three different powder samples.

TAPPED DENSITY

The tapped density is an increased bulk density attained after mechanically tapping a container containing the powder sample. Tapped density is obtained by mechanically tapping a graduated measuring cylinder or vessel containing a powder sample. After observing the initial powder volume or weight, the measuring cylinder or vessel is mechanically tapped, and volume or weight readings are taken until little further volume or weight change is observed. The mechanical tapping is achieved by raising the cylinder or vessel and allowing it to drop under its own weight a specified distance by either of three methods as described below. Devices that rotate the cylinder or vessel during tapping may be preferred to minimize any possible separation of the mass during tapping down.

Method I

APPARATUS

The apparatus (*Figure 3*) consists of the following:

- A 250-mL graduated cylinder (readable to 2 mL with a mass of 220 ± 44 g)
- A settling apparatus capable of producing, in 1 min, either nominally 250 ± 15 taps from a height of 3 ± 0.2 mm, or nominally 300 ± 15 taps from a height of 14 ± 2 mm. The support for the graduated cylinder, with its holder, has a mass of 450 ± 10 g.

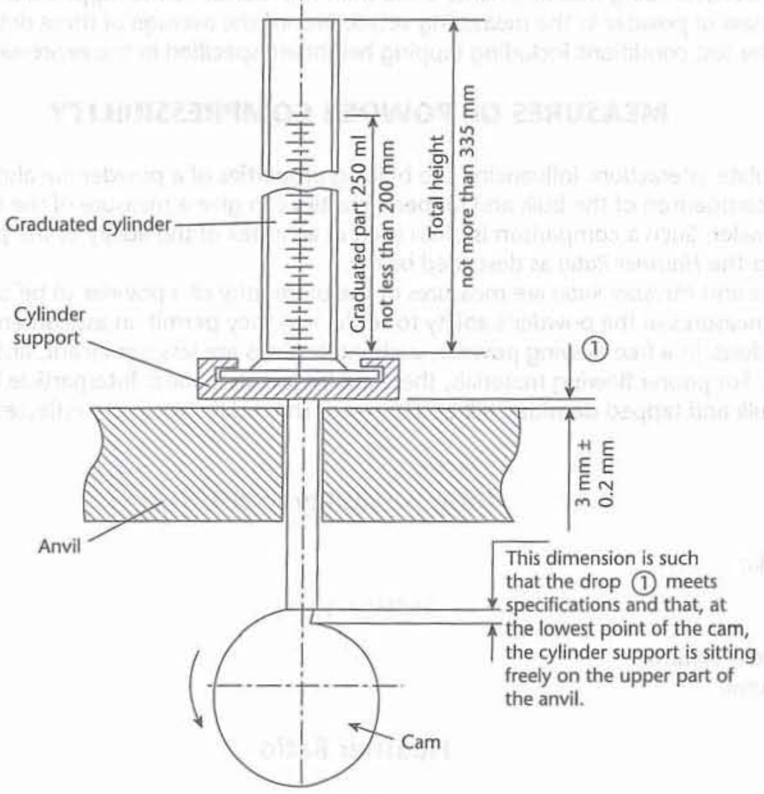

Figure 3.

PROCEDURE

Proceed as described above for the determination of the bulk volume (V_0). Secure the cylinder in the holder. Carry out 10, 500, and 1250 taps on the same powder sample and read the corresponding volumes V_{10}, V_{500}, and V_{1250} to the nearest graduated unit. If the difference between V_{500} and V_{1250} is less than or equal to 2 mL, V_{1250} is the tapped volume. If the difference between V_{500} and V_{1250} exceeds 2 mL, repeat in increments such as 1250 taps, until the difference between succeeding measurements is less than or equal to 2 mL. Fewer taps may be appropriate for some powders, when validated. Calculate the tapped density (g/mL) using the formula m/V_F, in which V_F is the final tapped volume. Generally, replicate determinations are desirable for the determination of this property. Specify the drop height with the results. If it is not possible to use a 100-g test sample, use a reduced amount and a suitable 100-mL graduated cylinder (readable to 1 mL) weighing 130 ± 16 g and mounted on a holder weighing 240 ± 12 g. If the difference between V_{500} and V_{1250} is less than or equal to 1 mL, V_{1250} is the tapped volume. If the difference between V_{500} and V_{1250} exceeds 1 mL, repeat in increments such as 1250 taps, until the difference between succeeding measurements is less than or equal to 1 mL. The modified test conditions are specified in the expression of the results.

Method II

APPARATUS and PROCEDURE

Proceed as directed under *Method I* except that the mechanical tester provides a fixed drop of 3 ± 0.2 mm at a nominal rate of 250 taps per min.

Method III

APPARATUS and PROCEDURE

Proceed as directed in *Method III—Measurement in a Vessel* for measuring bulk density using the measuring vessel equipped with the cap shown in *Figure 2*. The measuring vessel with the cap is lifted 50–60 times per min by the use of a suitable tapped density tester. Carry out 200 taps, remove the cap, and carefully scrape excess powder from the top of the measuring vessel as described in *Method III—Measurement in a Vessel* for measuring the bulk density. Repeat the procedure using 400 taps. If the difference between the two masses obtained after 200 and 400 taps exceeds 2%, carry out a test using 200 additional taps until the difference between succeeding measurements is less than 2%. Calculate the tapped density (g/mL) using the formula $M_F/100$, where M_F is the mass of powder in the measuring vessel. Record the average of three determinations using three different powder samples. The test conditions including tapping height are specified in the expression of the results.

MEASURES OF POWDER COMPRESSIBILITY

Because the interparticulate interactions influencing the bulking properties of a powder are also the interactions that interfere with powder flow, a comparison of the bulk and tapped densities can give a measure of the relative importance of these interactions in a given powder. Such a comparison is often used as an index of the ability of the powder to flow, for example the *Compressibility Index* or the *Hausner Ratio* as described below.

The *Compressibility Index* and *Hausner Ratio* are measures of the propensity of a powder to be compressed as described above. As such, they are measures of the powder's ability to settle, and they permit an assessment of the relative importance of interparticulate interactions. In a free-flowing powder, such interactions are less significant, and the bulk and tapped densities will be closer in value. For poorer flowing materials, there are frequently greater interparticle interactions, and a greater difference between the bulk and tapped densities will be observed. These differences are reflected in the *Compressibility Index* and the *Hausner Ratio.*

Compressibility Index

Calculate by the formula:

$$100(V_0 - V_F)/V_0$$

V_0 = unsettled apparent volume
V_F = final tapped volume

Hausner Ratio

$$V_0/V_F$$

Depending on the material, the compressibility index can be determined using V_{10} instead of V_0. [NOTE—If V_{10} is used, it will be clearly stated in the results.]

⟨621⟩ CHROMATOGRAPHY

INTRODUCTION

Chromatographic separation techniques are multistage separation methods in which the components of a sample are distributed between two phases, of which one is stationary and the other mobile. The stationary phase may be a solid or a liquid supported on a solid or a gel. The stationary phase may be packed in a column, spread as a layer, distributed as a film, or applied by other techniques. The mobile phase may be gaseous or liquid or supercritical fluid. The separation may be based on adsorption, mass distribution (partition), or ion exchange; or it may be based on differences among the physicochemical properties of the molecules, such as size, mass, and volume. This chapter contains general procedures, definitions, and calculations of common parameters and describes general requirements for system suitability. The types of chromatography useful in qualitative and quantitative analysis employed in *USP* procedures are column, gas, paper, thin-layer (including high-performance thin-layer chromatography), and pressurized liquid chromatography (commonly called high-pressure or high-performance liquid chromatography).

GENERAL PROCEDURES

This section describes the basic procedures used when a chromatographic method is described in a monograph. The following procedures are followed unless otherwise indicated in the individual monograph.

Paper Chromatography

STATIONARY PHASE

The stationary phase is a sheet of paper of suitable texture and thickness. Development may be ascending, in which the solvent is carried up the paper by capillary forces, or descending, in which the solvent flow is also assisted by gravitational force. The orientation of paper grain with respect to solvent flow is to be kept constant in a series of chromatograms. (The machine direction is usually designated by the manufacturer.)

APPARATUS

The essential equipment for paper chromatography consists of a vapor-tight chamber with inlets for addition of solvent and a rack of corrosion-resistant material about 5 cm shorter than the inside height of the chamber. The rack serves as a support for solvent troughs and for antisiphon rods that, in turn, hold up the chromatographic sheets. The bottom of the chamber is covered with the prescribed solvent system or mobile phase. Saturation of the chamber with solvent vapor is facilitated by lining the inside walls with paper wetted with the prescribed solvent system.

SPOTTING

The substance or substances analyzed are dissolved in a suitable solvent. Convenient volumes delivered from suitable micropipets of the resulting solution, normally containing 1–20 µg of the compound, are placed in 6- to 10-mm spots NLT 3 cm apart.

DESCENDING PAPER CHROMATOGRAPHY PROCEDURE

1. A spotted chromatographic sheet is suspended in the apparatus, using the antisiphon rod to hold the upper end of the sheet in the solvent trough. [NOTE—Ensure that the portion of the sheet hanging below the rods is freely suspended in the chamber without touching the rack, the chamber walls, or the fluid in the chamber.]
2. The chamber is sealed to allow equilibration (saturation) of the chamber and the paper with the solvent vapor. Any excess pressure is released as necessary.
3. After equilibration of the chamber, the prepared mobile phase is introduced into the trough through the inlet.
4. The inlet is closed, and the mobile solvent phase is allowed to travel the desired distance down the paper.
5. The sheet is removed from the chamber.
6. The location of the solvent front is quickly marked, and the sheet is dried.
7. The chromatogram is observed and measured directly or after suitable development to reveal the location of the spots of the isolated drug or drugs.

ASCENDING PAPER CHROMATOGRAPHY PROCEDURE

1. The mobile phase is added to the bottom of the chamber.
2. The chamber is sealed to allow equilibration (saturation) of the chamber and the paper with the solvent vapor. Any excess pressure is released as necessary.
3. The lower edge of the stationary phase is dipped into the mobile phase to permit the mobile phase to rise on the chromatographic sheet by capillary action.
4. When the solvent front has reached the desired height, the chamber is opened, the sheet is removed, the location of the solvent front is quickly marked, and the sheet is dried.
5. The chromatogram is observed and measured directly or after suitable development to reveal the location of the spots of the isolated drug or drugs.

Thin-Layer Chromatography

STATIONARY PHASE

The stationary phase is a relatively thin, uniform layer of dry, finely powdered material applied to a glass, plastic, or metal sheet or plate (typically called the plate). The stationary phase of TLC plates has an average particle size of 10–15 µm, and that

of high-performance TLC (HPTLC) plates has an average particle size of 5 µm. Commercial plates with a preadsorbent zone can be used if they are specified in a monograph. Sample applied to the preadsorbent region develops into sharp, narrow bands at the preadsorbent–sorbent interface. The separations achieved may be based on adsorption, partition, or a combination of both effects, depending on the particular type of stationary phase.

APPARATUS

A chromatographic chamber made of inert, transparent material and having the following specifications is used: a flat-bottom or twin trough, a tightly fitted lid, and a size suitable for the plates. The chamber is lined on at least one wall with filter paper. Sufficient mobile phase or developing solvent is added to the chamber that, after impregnation of the filter paper, a depth appropriate to the dimensions of the plate used is available. The chromatographic chamber is closed and allowed to equilibrate. [NOTE—Unless otherwise indicated, the chromatographic separations are performed in a saturated chamber.]

DETECTION/VISUALIZATION

An ultraviolet (UV) light source suitable for observations under short- (254 nm) and long- (365 nm) wavelength UV light and a variety of other spray reagents used to make spots visible are often used.

SPOTTING

Solutions are spotted on the surface of the stationary phase (plate) at the prescribed volume in sufficiently small portions to obtain circular spots of 2–5 mm in diameter (1–2 mm on HPTLC plates) or bands of 10–20 mm × 1–2 mm (5–10 mm × 0.5–1 mm on HPTLC plates) at an appropriate distance from the lower edge of and sides of the plate. [NOTE—During development, the application position must be at least 5 mm (TLC) or 3 mm (HPTLC) above the level of the mobile phase.] The solutions are applied on a line parallel to the lower edge of the plate with an interval of at least 10 mm (5 mm on HPTLC plates) between the centers of spots, or 4 mm (2 mm on HPTLC plates) between the edges of bands, then allowed to dry.

PROCEDURE

1. Place the plate in the chamber, ensuring that the spots or bands are above the surface of the mobile phase.
2. Close the chamber.
3. Allow the mobile phase to ascend the plate until the solvent front has traveled three-quarters of the length of the plate, or the distance prescribed in the monograph.
4. Remove the plate, mark the solvent front with a pencil, and allow to dry.
5. Visualize the chromatograms as prescribed.
6. Determine the chromatographic retardation factor (R_F) values for the principal spots or zones.
7. Presumptive identification can be made by observation of spots or zones of identical R_F value and about equal magnitude obtained, respectively, with an unknown and a standard chromatographed on the same plate. A visual comparison of the size or intensity of the spots or zones may serve for semiquantitative estimation. Quantitative measurements are possible by means of densitometry (absorbence or fluorescence measurements).

Column Chromatography

SOLID SUPPORT

Purified siliceous earth is used for normal-phase separation. Silanized chromatographic siliceous earth is used for reverse-phase partition chromatography.

STATIONARY PHASE

The solid support is modified by the addition of a stationary phase specified in the individual monograph. If a mixture of liquids is used as the stationary phase, mix the liquids before the introduction of the solid support.

MOBILE PHASE

The mobile phase is specified in the individual monograph. If the stationary phase is an aqueous solution, equilibrate with water. If the stationary phase is a polar organic fluid, equilibrate with that fluid.

APPARATUS

Unless otherwise specified in the individual monograph, the chromatographic tube is about 22 mm in inside diameter and 200–300 mm long. Attached to it is a delivery tube, without stopcock, about 4 mm in inside diameter and about 50 mm long.

Apparatus preparation: Pack a pledget of fine glass wool in the base of the tube. Combine the specified volume of stationary phase and the specified amount of solid support to produce a homogeneous, fluffy mixture. Transfer this mixture to the chromatographic tube, and tamp using gentle pressure to obtain a uniform mass. If the specified amount of solid support is more than 3 g, transfer the mixture to the column in portions of approximately 2 g, and tamp each portion. If the assay or test requires a multisegment column with a different stationary phase specified for each segment, tamp after the addition of each segment, and add each succeeding segment directly to the previous one. Pack a pledget of fine glass wool above the completed column packing. [NOTE—The mobile phase should flow through a properly packed column as a moderate stream or, if reverse-phase chromatography is applied, as a slow trickle.]

If a solution of the analyte is incorporated into the stationary phase, complete the quantitative transfer to the chromatographic tube by scrubbing the beaker used for the preparation of the test mixture with a mixture of about 1 g of *Solid Support* and several drops of the solvent used to prepare the sample solution before adding the final portion of glass wool.

PROCEDURE

1. Transfer the mobile phase to the column space above the column packing, and allow it to flow through the column under the influence of gravity.
2. Rinse the tip of the chromatographic column with about 1 mL of mobile phase before each change in composition of mobile phase and after completion of the elution.
3. If the analyte is introduced into the column as a solution in the mobile phase, allow it to pass completely into the column packing, then add mobile phase in several small portions, allowing each to drain completely, before adding the bulk of the mobile phase.
4. Where the procedure indicates the use of multiple chromatographic columns mounted in series and the addition of mobile phase in divided portions is specified, allow each portion to drain completely through each column, and rinse the tip of each with mobile phase before the addition of each succeeding portion.

General Chapters

Gas Chromatography (GC)

LIQUID STATIONARY PHASE

This type of phase is available in packed or capillary columns.

PACKED COLUMN GC

The liquid stationary phase is deposited on a finely divided, inert solid support, such as diatomaceous earth, porous polymer, or graphitized carbon, which is packed into a column that is typically 2–4 mm in internal diameter and 1–3 m in length.

CAPILLARY COLUMN GC

In capillary columns, which contain no packed solid support, the liquid stationary phase is deposited on the inner surface of the column and may be chemically bonded to it.

SOLID STATIONARY PHASE

This type of phase is available only in packed columns. In these columns the solid phase is an active adsorbent, such as alumina, silica, or carbon, packed into a column. Polyaromatic porous resins, which are sometimes used in packed columns, are not coated with a liquid phase. [NOTE—Packed and capillary columns must be conditioned before use until the baseline and other characteristics are stable. The column or packing material supplier provides instructions for the recommended conditioning procedure.]

APPARATUS

A gas chromatograph consists of a carrier gas source, injection port, column, detector, and recording device. The injection port, column, and detector are temperature controlled and may be varied as part of the analysis. The typical carrier gas is helium, nitrogen, or hydrogen, depending on the column and detector in use. The type of detector used depends on the nature of the compounds analyzed and is specified in the individual monograph. Detector output is recorded as a function of time, and the instrument response, measured as peak area or peak height, is a function of the amount present.

TEMPERATURE PROGRAM

The length and quality of a GC separation can be controlled by altering the temperature of the chromatographic column. When a temperature program is necessary, the individual monograph indicates the conditions in table format. The table indicates the initial temperature, rate of temperature change (ramp), final temperature, and hold time at the final temperature.

PROCEDURE

1. Equilibrate the column, injector, and detector with flowing carrier gas until a constant signal is received.
2. Inject a sample through the injector septum, or use an autosampler.
3. Begin the temperature program.
4. Record the chromatogram.
5. Analyze as indicated in the monograph.

Liquid Chromatography (LC)

The term *liquid chromatography*, as used in the compendia, is synonymous with high-pressure liquid chromatography and high-performance liquid chromatography. LC is a separation technique based on a solid stationary phase and a liquid mobile phase.

STATIONARY PHASE

Separations are achieved by partition, adsorption, or ion-exchange processes, depending on the type of stationary phase used. The most commonly used stationary phases are modified silica or polymeric beads. The beads are modified by the addition of long-chain hydrocarbons. The specific type of packing needed to complete an analysis is indicated by the "L" designation in the individual monograph (see also the section *Chromatographic Columns*, below). The size of the beads is often described in the monograph as well. Changes in the packing type and size are covered in the *System Suitability* section of this chapter.

CHROMATOGRAPHIC COLUMN

The term *column* includes stainless steel, lined stainless steel, and polymeric columns, packed with a stationary phase. The length and inner diameter of the column affects the separation, and therefore typical column dimensions are included in the individual monograph. Changes to column dimensions are discussed in the *System Suitability* section of this chapter. Compendial monographs do not include the name of appropriate columns; this omission avoids the appearance of endorsement of a vendor's product and natural changes in the marketplace. See the section *Chromatographic Columns* for more information.

In *LC* procedures, a guard column may be used with the following requirements, unless otherwise is indicated in the individual monograph: (a) the length of the guard column must be NMT 15% of the length of the analytical column, (b) the inner diameter must be the same or smaller than that of the analytical column, and (c) the packing material should be the same as the analytical column (e.g., silica) and contain the same bonded phase (e.g., C18). In any case, all system suitability requirements specified in the official procedure must be met with the guard column installed.

MOBILE PHASE

The mobile phase is a solvent or a mixture of solvents, as defined in the individual monograph.

APPARATUS

A liquid chromatograph consists of a reservoir containing the mobile phase, a pump to force the mobile phase through the system at high pressure, an injector to introduce the sample into the mobile phase, a chromatographic column, a detector, and a data collection device.

GRADIENT ELUTION

The technique of continuously changing the solvent composition during the chromatographic run is called gradient elution or solvent programming. The gradient elution profile is presented in the individual monograph as a gradient table, which lists the time and proportional composition of the mobile phase at the stated time.

PROCEDURE

1. Equilibrate the column and detector with mobile phase at the specified flow rate until a constant signal is received.
2. Inject a sample through the injector, or use an autosampler.
3. Begin the gradient program.
4. Record the chromatogram.
5. Analyze as directed in the monograph.

CHROMATOGRAPHIC COLUMNS

A complete list of packings (L), phases (G), and supports (S) used in *USP–NF* tests and assays is located in *USP–NF* and *PF, Reagents, Indicators, and Solutions—Chromatographic Columns.* This list is intended to be a convenient reference for the chromatographer in identifying the pertinent chromatographic column specified in the individual monograph.

DEFINITIONS AND INTERPRETATION OF CHROMATOGRAMS

Chromatogram: A chromatogram is a graphical representation of the detector response, concentration of analyte in the effluent, or other quantity used as a measure of effluent concentration versus effluent volume or time. In planar chromatography, *chromatogram* may refer to the paper or layer with the separated zones.

Figure 1 represents a typical chromatographic separation of two substances, 1 and 2. t_{R1} and t_{R2} are the respective retention times; h is the height, $h/2$ is the half-height, and $W_{h/2}$ is the width at half-height, for peak 1. W_1 and W_2 are the respective widths of peaks 1 and 2 at the baseline. Air peaks are a feature of gas chromatograms and correspond to the solvent front in LC. The retention time of these air peaks, or unretained components, is designated as t_M.

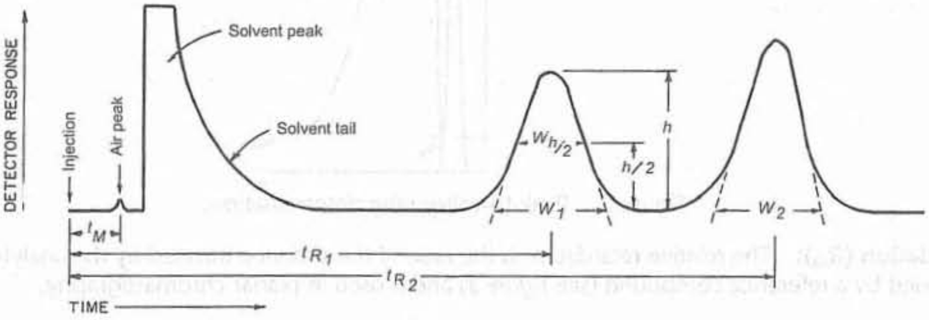

Figure 1. Chromatographic separation of two substances.

Dwell Volume (D): The dwell volume, also known as gradient delay volume, is the volume between the point at which the eluents meet and the top of the column.

Hold-Up Time (t_M): The hold-up time is the time required for elution of an unretained component (see *Figure 1*, shown as an air or unretained solvent peak, with the baseline scale in min).

Hold-Up Volume (V_M): The hold-up volume is the volume of mobile phase required for elution of an unretained component. It may be calculated from the hold-up time and the flow rate F, in mL/min:

$$V_M = t_M \times F$$

In size exclusion chromatography, the symbol V_o is used.

Number of Theoretical Plates (N)[1]**:** N is a measure of column efficiency. For Gaussian peaks, it is calculated by:

$$N = 16(t_R/W)^2$$

where t_R is the retention time of the substance, and W is the peak width at its base, obtained by extrapolating the relatively straight sides of the peak to the baseline. The value of N depends upon the substance being chromatographed as well as the operating conditions, such as the flow rate and temperature of the mobile phase or carrier gas, the quality of the packing, the uniformity of the packing within the column, and, for capillary columns, the thickness of the stationary phase film and the internal diameter and length of the column.

Where electronic integrators are used, it may be convenient to determine the number of theorical plates, by the equation:

[1] The parameters k, N, r, and r_G were developed for isothermal GC separations and isocratic HPLC separations. Because these terms are thermodynamic parameters, they are only valid for separations made at constant temperature, mobile phase composition, and flow rate. However, for separations made with a temperature program or solvent gradient, these parameters may be used simply as comparative means to ensure that adequate chromatographic conditions exist to perform the methods as intended in the monographs.

General Chapters

$$N = 5.54\left(\frac{t_R}{W_{h/2}}\right)^2$$

where $W_{h/2}$ is the peak width at half-height. However, in the event of dispute, only equations based on peak width at baseline are to be used.

Peak: The peak is the portion of the chromatographic recording of the detector response when a single component is eluted from the column. If separation is incomplete, two or more components may be eluted as one unresolved peak.

Peak-to-Valley Ratio (*p/v*): The *p/v* may be employed as a system suitability criterion in a test for related substances when baseline separation between two peaks is not achieved. *Figure 2* represents a partial separation of two substances, where H_p is the height above the extrapolated baseline of the minor peak and H_v is the height above the extrapolated baseline at the lowest point of the curve separating the minor and major peaks:

$$p/v = H_p/H_v$$

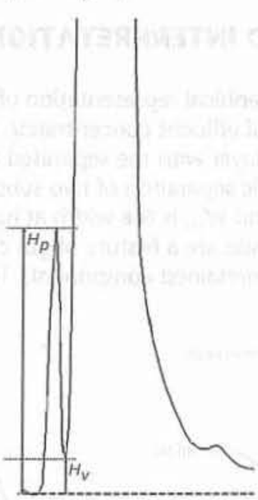

Figure 2. Peak-to-valley ratio determination.

Relative Retardation (R_{ret}): The relative retardation is the ratio of the distance traveled by the analyte to the distance simultaneously traveled by a reference compound (see *Figure 3*) and is used in planar chromatography.

$$R_{ret} = b/c$$

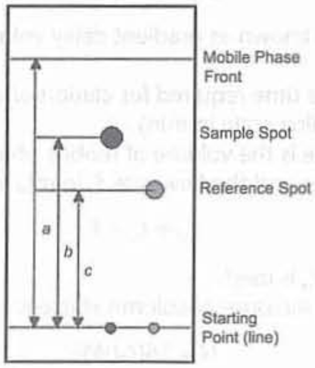

Figure 3. Typical planar chromatography.

Relative Retention (*r*)[1]**:** The ratio of the adjusted retention time of a component relative to that of another used as a reference obtained under identical conditions:

$$r = t_{R2} - t_M/t_{R1} - t_M$$

where t_{R2} is the retention time measured from the point of injection of the compound of interest; t_{R1} is the retention time measured from the point of injection of the compound used as reference; and t_M is the retention time of a nonretained marker defined in the procedure, all determined under identical experimental conditions on the same column.

Relative Retention Time (*RRT*): Also known as unadjusted relative retention. Comparisons in USP are normally made in terms of unadjusted relative retention, unless otherwise indicated.

$$RRT = t_{R2}/t_{R1}$$

The symbol r_G is also used to designate unadjusted relative retention values.

Relative Standard Deviation in Percentage

$$\%RSD = \frac{100}{\bar{x}}\left(\frac{\sum_{i=1}^{N}(x_i-\bar{x})^2}{N-1}\right)^{1/2}$$

Retardation Factor (R_F): The retardation factor is the ratio of the distance traveled by the center of the spot to the distance simultaneously traveled by the mobile phase and is used in planar chromatography. Using the symbols in *Figure 3*:

$$R_F = b/a$$

Retention Factor (k)[1]: The retention factor is also known as the capacity factor (k'). Defined as:

$$k = \frac{\text{amount of substance in stationary phase}}{\text{amount of substance in mobile phase}}$$

or

$$k = \frac{\text{time spent by substance in stationary phase}}{\text{time spent by substance in mobile phase}}$$

The retention factor of a component may be determined from the chromatogram:

$$k = (t_R - t_M)/t_M$$

Retention Time (t_R): In liquid chromatography and gas chromatography, the retention time, t_R, is defined as the time elapsed between the injection of the sample and the appearance of the maximum peak response of the eluted sample zone. t_R may be used as a parameter for identification. Chromatographic retention times are characteristic of the compounds they represent but are not unique. Coincidence of retention times of a sample and a reference substance can be used as a partial criterion in construction of an identity profile but may not be sufficient on its own to establish identity. Absolute retention times of a given compound may vary from one chromatogram to the next.

Retention Volume (V_R): The retention volume is the volume of mobile phase required for elution of a component. It may be calculated from the retention time and the flow rate in mL/min:

$$V_R = t_R \times F$$

Resolution (R_S): The resolution is the separation of two components in a mixture, calculated by:

$$R_S = 2 \times (t_{R2} - t_{R1})/(W_1 + W_2)$$

where t_{R2} and t_{R1} are the retention times of the two components; and W_2 and W_1 are the corresponding widths at the bases of the peaks obtained by extrapolating the relatively straight sides of the peaks to the baseline.

Where electronic integrators are used, it may be convenient to determine the resolution, by the equation:

$$R_S = 1.18 \times (t_{R2} - t_{R1})/(W_{1,h/2} + W_{2,h/2})$$

Separation Factor (α): The separation factor is the relative retention calculated for two adjacent peaks (by convention, the value of the separation factor is always >1):

$$\alpha = k_2/k_1$$

Symmetry Factor (A_S)[2]: The symmetry factor, also known as the tailing factor, of a peak (see *Figure 4*) is calculated by:

$$A_S = W_{0.05}/2f$$

where $W_{0.05}$ is the width of the peak at 5% height and f is the distance from the peak maximum to the leading edge of the peak, the distance being measured at a point 5% of the peak height from the baseline.

[2] It is also a common practice to measure the Asymmetry Factor as the ratio of the distance between the vertical line connecting the peak apex with the interpolated baseline and the peak front, and the distance between that line and the peak back measured at 10% of the peak height (see *Figure 4*), would be $(W_{0.10} - f_{0.10})/f_{0.10}$. However, for the purposes of USP, only the formula (A_S) as presented here is valid.

General Chapters

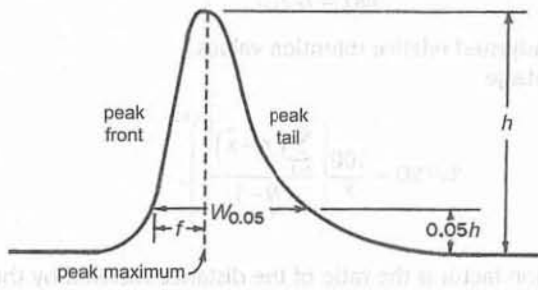

Figure 4. Asymmetrical chromatographic peak.

Tailing Factor (T): See *Symmetry Factor.*

SYSTEM SUITABILITY

System suitability tests are an integral part of gas and liquid chromatographic methods. These tests are used to verify that the chromatographic system is adequate for the intended analysis.

The tests are based on the concept that the equipment, electronics, analytical operations, and samples analyzed constitute an integral system that can be evaluated as such.

Factors that may affect chromatographic behavior include the following:

- Composition, ionic strength, temperature, and apparent pH of the mobile phase
- Flow rate, column dimensions, column temperature, and pressure
- Stationary phase characteristics, including type of chromatographic support (particle-based or monolithic), particle or macropore size, porosity, and specific surface area
- Reverse-phase and other surface modification of the stationary phases, the extent of chemical modification (as expressed by end-capping, carbon loading, etc.)

The resolution, R_s, is a function of the number of theoretical plates, N (also referred to as efficiency), the separation factor, α, and the capacity factor, k. [NOTE—All terms and symbols are defined in the preceding section *Definitions and Interpretation of Chromatograms.*] For a given stationary phase and mobile phase, N may be specified to ensure that closely eluting compounds are resolved from each other, to establish the general resolving power of the system, and to ensure that internal standards are resolved from the drug. This is a less reliable means to ensure resolution than is direct measurement. Column efficiency is, in part, a reflection of peak sharpness, which is important for the detection of trace components.

Replicate injections of a standard preparation or other standard solutions are compared to ascertain whether requirements for precision are met. Unless otherwise specified in the individual monograph, data from five replicate injections of the analyte are used to calculate the relative standard deviation, %*RSD*, if the requirement is 2.0% or less; data from six replicate injections are used if the relative standard deviation requirement is more than 2.0%.

For the *Assay* in a drug substance monograph, where the value is 100% for the pure substance, and no maximum relative standard deviation is stated, the maximum permitted %*RSD* is calculated for a series of injections of the reference solution:

$$\%RSD = KB\sqrt{n}/t_{90\%,n-1}$$

where K is a constant (0.349), obtained from the expression $K = (0.6/\sqrt{2}) \times (t_{90\%,5}/\sqrt{6})$, in which $0.6/\sqrt{2}$ represents the required percentage relative standard deviation after six injections for $B = 1.0$; B is the upper limit given in the definition of the individual monograph minus 100%; n is the number of replicate injections of the reference solution ($3 \le n \le 6$); and $t_{90\%,n-1}$ is the Student's t at the 90% probability level (double sided) with $n - 1$ degrees of freedom.

Unless otherwise prescribed, the maximum permitted relative standard deviation does not exceed the appropriate value given in the table of repeatability requirements. This requirement does not apply to tests for related substances.

Relative Standard Deviation Requirements

	Number of Individual Injections			
	3	4	5	6
B (%)	**Maximum Permitted RSD**			
2.0	0.41	0.59	0.73	0.85
2.5	0.52	0.74	0.92	1.06
3.0	0.62	0.89	1.10	1.27

The symmetry factor, A_s, a measure of peak symmetry, is unity for perfectly symmetrical peaks; and its value increases as tailing becomes more pronounced (see *Figure 4*). In some cases, values less than unity may be observed. As peak symmetry moves away from values of 1, integration, and hence precision, become less reliable.

The signal-to-noise ratio (S/N) is a useful system suitability parameter. The S/N is calculated as follows:

$$S/N = 2H/h$$

where H is the height of the peak measured from the peak apex to a baseline extrapolated over a distance ≥5 times the peak width at its half-height; and h is the difference between the largest and smallest noise values observed over a distance ≥5 times the width at the half-height of the peak and, if possible, situated equally around the peak of interest (see *Figure 5*).

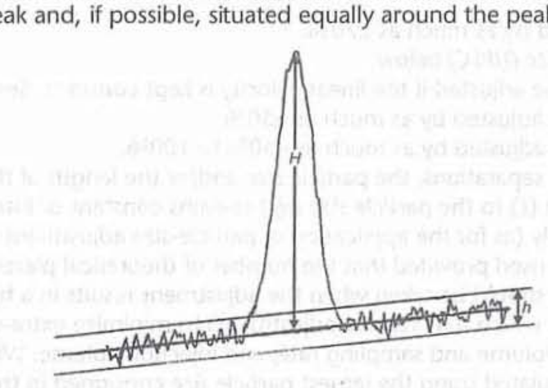

Figure 5. Noise and chromatographic peak, components of the *S/N* ratio.

These system suitability tests are performed by collecting data from replicate injections of standard or other solutions as specified in the individual monograph.

The specification of definitive parameters in a monograph does not preclude the use of other suitable operating conditions.

Adjustments to the specified chromatographic system may be necessary in order to meet system suitability requirements. Adjustments to chromatographic systems performed in order to comply with system suitability requirements are not to be made in order to compensate for column failure or system malfunction. Adjustments are permitted only when suitable standards (including Reference Standards) are available for all compounds used in the suitability test; and the adjustments or column change yields a chromatogram that meets all the system suitability requirements specified in the official procedure.

If adjustments of operating conditions are necessary in order to meet system suitability requirements, each of the items in the following list is the maximum variation that can be considered, unless otherwise directed in the monograph; these changes may require additional verification data. To verify the suitability of the method under the new conditions, assess the relevant analytical performance characteristics potentially affected by the change. Multiple adjustments can have a cumulative effect on the performance of the system and are to be considered carefully before implementation. In some circumstances, it may be desirable to use an HPLC column with different dimensions to those prescribed in the official procedure (different length, internal diameter, and/or particle size). In either case, changes in the chemical characteristics ("L" designation) of the stationary phase will be considered a modification to the method and will require full validation. Adjustments to the composition of the mobile phase in gradient elution may cause changes in selectivity and are not recommended. If adjustments are necessary, change in column packing (maintaining the same chemistry), the duration of an initial isocratic hold (when prescribed), and/or dwell volume adjustments are allowed. Additional allowances for gradient adjustment are noted in the text below.

pH of Mobile Phase (HPLC): The pH of the aqueous buffer used in the preparation of the mobile phase can be adjusted to within ±0.2 units of the value or range specified. Applies to both gradient and isocratic separations.

Concentration of Salts in Buffer (HPLC): The concentration of the salts used in the preparation of the aqueous buffer employed in the mobile phase can be adjusted to within ±10% if the permitted pH variation (see above) is met. Applies to both gradient and isocratic separations.

Ratio of Components in Mobile Phase (HPLC): The following adjustment limits apply to minor components of the mobile phase (specified at 50% or less). The amounts of these components can be adjusted by ±30% relative. However, the change in any component cannot exceed ±10% absolute (i.e., in relation to the total mobile phase). Adjustment can be made to one minor component in a ternary mixture. Examples of adjustments for binary and ternary mixtures are given below.

Binary Mixtures

specified ratio of 50:50: 30% of 50 is 15% absolute, but this exceeds the maximum permitted change of ±10% absolute in either component. Therefore, the mobile phase ratio may be adjusted only within the range of 40:60–60:40.

specified ratio of 2:98: 30% of 2 is 0.6% absolute. Therefore the maximum allowed adjustment is within the range of 1.4: 98.6–2.6: 97.4.

Ternary Mixtures

specified ratio of 60:35:5: For the second component, 30% of 35 is 10.5% absolute, which exceeds the maximum permitted change of ±10% absolute in any component. Therefore the second component may be adjusted only within the range of 25%–45% absolute. For the third component, 30% of 5 is 1.5% absolute. In all cases, a sufficient quantity of the first component is used to give a total of 100%. Therefore, mixture ranges of 50:45:5–70:25:5 or 58.5: 35: 6.5–61.5: 35: 3.5 would meet the requirement.

General Chapters

Wavelength of UV-Visible Detector (HPLC): Deviations from the wavelengths specified in the procedure are not permitted. The procedure specified by the detector manufacturer, or another validated procedure, is used to verify that error in the detector wavelength is, at most, ±3 nm.

Stationary Phase

column length (gc): Can be adjusted by as much as ±70%.

column length (hplc): See *Particle Size (HPLC)* below.

column inner diameter (hplc): Can be adjusted if the linear velocity is kept constant. See *Flow Rate (HPLC)* below.

column inner diameter (gc): Can be adjusted by as much as ±50%.

film thickness (capillary gc): Can be adjusted by as much as −50% to 100%.

Particle Size (HPLC): For isocratic separations, the particle size and/or the length of the column may be modified provided that the ratio of the column length (*L*) to the particle size (*dp*) remains constant or into the range between −25% to +50% of the prescribed *L*/*dp* ratio. Alternatively (as for the application of particle-size adjustment to superficially porous particles), other combinations of *L* and *dp* can be used provided that the number of theoretical plates (*N*) is within −25% to +50%, relative to the prescribed column. Caution should be taken when the adjustment results in a higher number of theoretical plates which generates smaller peak volumes, which may require adjustments to minimize extra-column band broadening by factors as instrument plumbing, detector cell volume and sampling rate, and injection volume. When particle size is not mentioned in the monograph, the ratio must be calculated using the largest particle size consigned in the USP definition of the column. For gradient separations, changes in length, column inner diameter and particle size are not allowed.

Particle Size (GC): Changing from a larger to a smaller or from a smaller to a larger particle size GC mesh support is acceptable if the chromatography meets the requirements of system suitability and the same particle size range ratio is maintained. The particle size range ratio is defined as the diameter of the largest particle divided by the diameter of the smallest particle.

Flow Rate (GC): The flow rate can be adjusted by as much as ±50%.

Flow Rate (HPLC): When the particle size is changed, the flow rate may require adjustment, because smaller-particle columns will require higher linear velocities for the same performance (as measured by reduced plate height). Flow rate changes for both a change in column diameter and particle size can be made by:

$$F_2 = F_1 \times [(dc_2^2 \times dp_1)/(dc_1^2 \times dp_2)]$$

where F_1 and F_2 are the flow rates for the original and modified conditions, respectively; dc_1 and dc_2 are the respective column diameters; and dp_1 and dp_2 are the particle sizes.

When a change is made from ≥3-µm to <3-µm particles in isocratic separations, an additional increase in linear velocity (by adjusting flow rate) may be justified, provided that the column efficiency does not drop by more than 20%. Similarly, a change from <3-µm to ≥3-µm particles may require additional reduction of linear velocity (flow rate) to avoid reduction in column efficiency by more than 20%. Changes in *F*, *dc*, and *dp* are not allowed for gradient separations.

Additionally, the flow rate can be adjusted by ±50% (isocratic only).

EXAMPLES: Adjustments in column length, internal diameter, particle size, and flow rate can be used in combination to give equivalent conditions (same *N*), but with differences in pressure and run time. The table below lists some of the more popular column configurations to give equivalent efficiency (*N*), by adjusting these variables.

Length (*L*, mm)	Column Diameter (*dc*, mm)	Particle Size (*dp*, µm)	Relative Values *L*/*dp*	*F*	*N*	Pressure	Run Time
250	4.6	10	25,000	0.5	0.8	0.2	3.3
150	4.6	5	30,000	1.0	1.0	1.0	1.0
150	2.1	5	30,000	0.2	1.0	1.0	1.0
100	4.6	3.5	28,600	1.4	1.0	1.9	0.5
100	2.1	3.5	28,600	0.3	1.0	1.9	0.5
75	4.6	2.5	30,000	2.0	1.0	4.0	0.3
75	2.1	2.5	30,000	0.4	1.0	4.0	0.3
50	4.6	1.7	29,400	2.9	1.0	8.5	0.1
50	2.1	1.7	29,400	0.6	1.0	8.5	0.1

For example, if a monograph specifies a 150-mm × 4.6-mm; 5-µm column operated at 1.5 mL/min, the same separation may be expected with a 75-mm × 2.1-mm; 2.5-µm column operated at 1.5 mL/min × 0.4 = 0.6 mL/min, along with a pressure increase of about four times and a reduction in run time to about 30% of the original.

Injection Volume (HPLC): The injection volume can be adjusted as far as it is consistent with accepted precision, linearity, and detection limits. Note that excessive injection volume can lead to unacceptable band broadening, causing a reduction in *N* and resolution. Applies to both gradient and isocratic separations.

Injection Volume and Split Volume (GC): The injection volume and split volume may be adjusted if detection and repeatability are satisfactory.

Column Temperature (HPLC): The column temperature can be adjusted by as much as ±10°. Column thermostating is recommended to improve control and reproducibility of retention time. Applies to both gradient and isocratic separations.

Oven Temperature (GC): The oven temperature can be adjusted by as much as ±10%.

Oven Temperature Program (GC): Adjustment of temperatures is permitted as stated above. When the specified temperature must be maintained or when the temperature must be changed from one value to another, an adjustment of up to ±20% is permitted.

Unless otherwise directed in the monograph, system suitability parameters are determined from the analyte peak.

Measured values of R_r, R_F, or t_R for the sample substance do not deviate from the values obtained for the reference compound and mixture by more than the statistically determined reliability estimates from replicate assays of the reference compound. Relative retention times may be provided in monographs for informational purposes only to aid in peak identification. There are no acceptance criteria applied to relative retention times.

Suitability testing is used to ascertain the effectiveness of the final operating system, which should be subjected to this testing. Make injections of the appropriate preparation(s) as required in order to demonstrate adequate *System suitability* (as described in the *Chromatographic system* section of the method in a monograph) throughout the run.

The preparation can be a standard preparation or a solution containing a known amount of analyte and any additional materials (e.g., excipients or impurities) useful in controlling the analytical system. Whenever there is a significant change in the chromatographic system (equipment, mobile phase component, or other components) or in a critical reagent, *System suitability* is to be reestablished. No sample analysis is acceptable unless the suitability of the system has been demonstrated.

QUANTITATION

During quantitation, disregard peaks caused by solvents and reagents or arising from the mobile phase or the sample matrix.

In the linear range, peak areas and peak heights are usually proportional to the quantity of compound eluting. The peak areas and peak heights are commonly measured by electronic integrators but may be determined by more classical approaches. Peak areas are generally used but may be less accurate if peak interference occurs. The components measured are separated from any interfering components. Peak tailing and fronting is minimized, and the measurement of peaks on tails of other peaks are avoided when possible.

Although comparison of impurity peaks with those in the chromatogram of a standard at a similar concentration is preferred, impurity tests may be based on the measurement of the peak response due to impurities and expressed as a percentage of the area of the drug peak. The standard may be the drug itself at a level corresponding to, for example, 0.5% impurity, assuming similar peak responses. When impurities must be determined with greater certainty, use a standard of the impurity itself or apply a correction factor based on the response of the impurity relative to that of the main component.

External Standard Method

The concentration of the component(s) quantified is determined by comparing the response(s) obtained with the sample solution to the response(s) obtained with a standard solution.

Internal Standard Method

Equal amounts of the internal standard are introduced into the sample solution and a standard solution. The internal standard is chosen so that it does not react with the test material, is stable, is resolved from the component(s) quantified (analytes), and does not contain impurities with the same retention time as that of the analytes. The concentrations of the analytes are determined by comparing the ratios of their peak areas or peak heights and the internal standard in the sample solution with the ratios of their peak areas or peak heights and the internal standard in the standard solution.

Normalization Procedure

The percentage content of a component of the test material is calculated by determining the area of the corresponding peak as a percentage of the total area of all the peaks, excluding those due to solvents or reagents or arising from the mobile phase or the sample matrix and those at or below the limit at which they can be disregarded.

Calibration Procedure

The relationship between the measured or evaluated signal *y* and the quantity (e.g., concentration, mass) of substance *x* is determined, and the calibration function is calculated. The analytical results are calculated from the measured signal or evaluated signal of the analyte and its position on the calibration curve.

In tests for impurities for both the *External Standard Method,* when a dilution of the sample solution is used for comparison, and the *Normalization Procedure,* any correction factors indicated in the monograph are applied (e.g., when the relative response factor is outside the range 0.8–1.2).

When the impurity test prescribes the total of impurities or there is a quantitative determination of an impurity, choice of an appropriate threshold setting and appropriate conditions for the integration of the peak areas is important. In such tests the limit at or below which a peak is disregarded is generally 0.05%. Thus, the threshold setting of the data collection system corresponds to at least half of this limit. Integrate the peak area of any impurity that is not completely separated from the principal peak, preferably by valley-to-valley extrapolation (tangential skim).

⟨631⟩ COLOR AND ACHROMICITY

DEFINITION

For the purposes of this chapter, color may be defined as the perception or subjective response by an observer to the objective stimulus of radiant energy in the visible spectrum extending over the range 400 nm to 700 nm in wavelength. Perceived color is a function of three variables: spectral properties of the object, both absorptive and reflective; spectral properties of the source of illumination; and visual characteristics of the observer.

Two objects are said to have a color match for a particular source of illumination when an observer cannot detect a color difference. Where a pair of objects exhibit a color match for one source of illumination and not another, they constitute a metameric pair. Color matches of two objects occur for all sources of illumination if the absorption and reflectance spectra of the two objects are identical.

Achromicity or colorlessness is one extreme of any color scale for transmission of light. It implies the complete absence of color, and therefore the visible spectrum of the object lacks absorbances. For practical purposes, the observer in this case perceives little if any absorption taking place in the visible spectrum.

COLOR ATTRIBUTES

Because the sensation of color has both a subjective and an objective part, color cannot be described solely in spectrophotometric terms. The common attributes of color therefore cannot be given a one-to-one correspondence with spectral terminology.

Three attributes are commonly used to identify a color: (1) hue, or the quality by which one color family is distinguished from another, such as red, yellow, blue, green, and intermediate terms; (2) value, or the quality that distinguishes a light color from a dark one; and (3) chroma, or the quality that distinguishes a strong color from a weak one, or the extent to which a color differs from a gray of the same value.

The three attributes of color may be used to define a three-dimensional color space in which any color is located by its coordinates. The color space chosen is a visually uniform one if the geometric distance between two colors in the color space is directly a measure of the color distance between them. Cylindrical coordinates are often conveniently chosen. Points along the long axis represent value from dark to light or black to white and have indeterminate hue and no chroma. Focusing on a cross-section perpendicular to the value axis, hue is determined by the angle about the long axis and chroma is determined by the distance from the long axis. Red, yellow, green, blue, purple, and intermediate hues are given by different angles. Colors along a radius of a cross-section have the same hue, which become more intense farther out. For example, colorless or achromic water has indeterminate hue, high value, and no chroma. If a colored solute is added, the water takes on a particular hue. As more is added, the color becomes darker, more intense, or deeper; i.e., the chroma generally increases and value decreases. If, however, the solute is a neutral color, i.e., gray, the value decreases, no increase in chroma is observed, and the hue remains indeterminate.

Laboratory spectroscopic measurements can be converted to measurements of the three color attributes. Spectroscopic results for three chosen lights or stimuli are weighted by three distribution functions to yield the tristimulus values, X, Y, Z (see *Color—Instrumental Measurement* ⟨1061⟩). The distribution functions were determined in color matching experiments with human subjects.

The tristimulus values are not coordinates in a visually uniform color space; however, several transformations have been proposed that are close to being uniform, one of which is given in the chapter cited ⟨1061⟩ *Color—Instrumental Measurement.* The value is often a function of only the Y value. Obtaining uniformity in the chroma-hue subspace has been less satisfactory. In a practical sense, this means in visual color comparison that if two objects differ significantly in hue, deciding which has a higher chroma becomes difficult. This points out the importance of matching standard to sample color as closely as possible, especially for the attributes of hue and chroma.

COLOR DETERMINATION AND STANDARDS

The perception of color and color matches is dependent on conditions of viewing and illumination. Determinations should be made using diffuse, uniform illumination under conditions that reduce shadows and nonspectral reflectance to a minimum. The surface of powders should be smoothed with gentle pressure so that a planar surface free from irregularities is presented. Liquids should be compared in matched color-comparison tubes, against a white background. If results are found to vary with illumination, those obtained in natural or artificial daylight are to be considered correct. Instead of visual determination, a suitable instrumental method may be used.

Colors of standards should be as close as possible to those of test specimens for quantifying color differences. Standards for opaque materials are available as sets of color chips that are arranged in a visually uniform space.* Standards identified by a letter for matching the colors of fluids can be prepared according to the accompanying table. To prepare the matching fluid required, pipet the prescribed volumes of the colorimetric test solutions [see under *Colorimetric Solutions* (CS) in the section *Reagents, Indicators, and Solutions*] and water into one of the matching containers, and mix the solution in the container. Make the comparison as directed in the individual monograph, under the viewing conditions previously described. The matching fluids, or other combinations of the colorimetric solutions, may be used in very low concentrations to measure deviation from achromicity.

Matching Fluids

Matching Fluid	Parts of Cobaltous Chloride CS	Parts of Ferric Chloride CS	Parts of Cupric Sulfate CS	Parts of Water
A	0.1	0.4	0.1	4.4
B	0.3	0.9	0.3	3.5
C	0.1	0.6	0.1	4.2
D	0.3	0.6	0.4	3.7
E	0.4	1.2	0.3	3.1
F	0.3	1.2	0.0	3.5
G	0.5	1.2	0.2	3.1
H	0.2	1.5	0.0	3.3
I	0.4	2.2	0.1	2.3
J	0.4	3.5	0.1	1.0
K	0.5	4.5	0.0	0.0
L	0.8	3.8	0.1	0.3
M	0.1	2.0	0.1	2.8
N	0.0	4.9	0.1	0.0
O	0.1	4.8	0.1	0.0
P	0.2	0.4	0.1	4.3
Q	0.2	0.3	0.1	4.4
R	0.3	0.4	0.2	4.1
S	0.2	0.1	0.0	4.7
T	0.5	0.5	0.4	3.6

⟨641⟩ COMPLETENESS OF SOLUTION

Place the quantity of the substance specified in the individual monograph in a meticulously cleansed, glass-stoppered, 10-mL glass cylinder approximately 13 mm × 125 mm in size. Using the solvent that is specified in the monograph or on the label of the product, fill the cylinder almost to the constriction at the neck. Shake gently to effect solution: the solution is not less clear than an equal volume of the same solvent contained in a similar vessel and examined similarly.

* Collections of color chips, arranged according to hue, value, and chroma in a visually uniform space and suitable for use in color designation of specimens by visual matching are available from GretagMacbeth LLC, 617 Little Britain Road, New Windsor, NY 12553-6148.

⟨643⟩ TOTAL ORGANIC CARBON

Total organic carbon (TOC) is an indirect measure of organic molecules present in pharmaceutical waters measured as carbon. Organic molecules are introduced into the water from the source water, from purification and distribution system materials, from biofilm growing in the system, and from the packaging of sterile and nonsterile waters. TOC can also be used as a process control attribute to monitor the performance of unit operations comprising the purification and distribution system. A TOC measurement is not a replacement test for endotoxin or microbiological control. Although there can be a qualitative relationship between a food source (TOC) and microbiological activity, there is no direct numerical correlation.

A number of acceptable methods exist for analyzing TOC. This chapter does not endorse, limit, or prevent any technologies from being used, but this chapter provides guidance on how to qualify these analytical technologies for use as well as guidance on how to interpret instrument results for use as a limit test.

Apparatuses commonly used to determine TOC in water for pharmaceutical use have in common the objective of oxidizing the organic molecules in the water to produce carbon dioxide followed by the measurement of the amount of carbon dioxide produced. Then the amount of CO_2 produced is determined and used to calculate the organic carbon concentration in the water.

All technologies must discriminate between the inorganic carbon, which may be present in the water from sources such as dissolved CO_2 and bicarbonate, and the CO_2 generated from the oxidation of organic molecules in the sample. The discrimination may be accomplished either by determining the inorganic carbon and subtracting it from the total carbon (total carbon is the sum of organic carbon and inorganic carbon), or by purging inorganic carbon from the sample before oxidation. Although purging may entrain organic molecules, such purgeable organic carbon is present in negligible quantities in water for pharmaceutical use.

PROCEDURES

• Bulk Water

The following sections apply to tests for bulk *Purified Water, Water for Injection, Water for Hemodialysis,* and the condensate of *Pure Steam.*

Apparatus requirements: This test method is performed either as an on-line test or as an off-line laboratory test using a calibrated instrument. The suitability of the apparatus must be periodically demonstrated as described below. In addition, it must have a manufacturer's specified limit of detection of 0.05 mg/L (0.05 ppm) or lower of carbon.

When testing water for quality control purposes, ensure that the instrument and its data are under appropriate control and that the sampling approaches and locations of both on-line and off-line measurements are representative of the quality of the water used. The nature of the water production, distribution, and use should be considered when selecting either on-line or off-line measurement.

Reagent water: Use water having a TOC level of not more than 0.10 mg/L. [Note—A conductivity requirement may be necessary in order to ensure method reliability.]

Container preparation: Organic contamination of containers results in higher TOC values. Therefore, use labware and containers that have been scrupulously cleaned of organic residues. Any method that is effective in removing organic matter can be used (see *Cleaning Glass Apparatus* ⟨1051⟩). Use *Reagent water* for the final rinse.

Standard solution: Unless otherwise directed in the individual monograph, dissolve in the *Reagent water* an accurately weighed quantity of USP Sucrose RS to obtain a solution having a concentration of 1.19 mg/L of sucrose (0.50 mg/L of carbon).

System suitability solution: Dissolve in *Reagent water* an accurately weighed quantity of USP 1,4-Benzoquinone RS to obtain a solution having a concentration of 0.75 mg/L (0.50 mg/L of carbon).

Reagent water control: Use a suitable quantity of *Reagent water* obtained at the same time as that used in the preparation of the *Standard Solution* and the *System suitability solution.*

Water sample: Obtain an on-line or off-line sample that suitably reflects the quality of water used.

Other control solutions: Prepare appropriate reagent blank solutions or other specified solutions needed for establishing the apparatus baseline or for calibration adjustments following the manufacturer's instructions, and run the appropriate blanks to zero the instrument, if necessary.

System suitability: Test the *Reagent water control* in the apparatus, and record the response, r_W. Repeat the test using the *Standard solution*, and record the response, r_S. Calculate the corrected *Standard solution* response, which is also the limit response, by subtracting the *Reagent water control* response from the response of the *Standard solution*. The theoretical limit of 0.50 mg/L of carbon is equal to the corrected *Standard solution* response, $r_S - r_W$. Test the *System suitability solution* in the apparatus, and record the response, r_{SS}. Calculate the corrected *System suitability solution* response by subtracting the *Reagent water control* response from the response of the *System suitability solution*, $r_{SS} - r_W$. Calculate the percent response efficiency for the *System suitability solution*:

$$\% \text{ response efficiency} = 100[(r_{SS} - r_W)/(r_S - r_W)]$$

r_{SS} = instrument response to the *System suitability solution*

r_W = instrument response to the *Reagent water control*
r_S = instrument response to the *Standard solution*

The system is suitable if the percent response efficiency is not less than 85% and not more than 115%.

Procedure: Perform the test on the *Water Sample*, and record the response, r_U. The *Water Sample* meets the requirements if r_U is not more than the limit response, $r_S - r_W$. This method can be performed using on-line or off-line instrumentation that meets the *Apparatus requirements*.

• **STERILE WATER**

The following sections apply to tests for *Sterile Water for Injection, Sterile Purified Water, Sterile Water for Irrigation,* and *Sterile Water for Inhalation*.

Follow the requirements in *Bulk Water*, with the following exceptions.

Apparatus requirements: In addition to the *Apparatus requirements* in *Bulk Water*, the apparatus must have a manufacturer's specified limit of detection of 0.10 mg/L (0.10 ppm) or lower of carbon.

Reagent water: Use water having a TOC level of not more than 0.50 mg/L. [NOTE—A conductivity requirement may be necessary in order to ensure method reliability.]

Standard solution: Unless otherwise directed in the individual monograph, dissolve in the *Reagent water* an accurately weighed quantity of USP Sucrose RS to obtain a solution having a concentration of 19.0 mg/L of sucrose (8.0 mg/L of carbon).

System suitability solution: Dissolve in *Reagent water* an accurately weighed quantity of USP 1,4-Benzoquinone RS to obtain a solution having a concentration of 12.0 mg/L (8.0 mg/L of carbon).

Water sample: Obtain a sample that suitably reflects the quality of water used. Before opening, vigorously agitate the package to homogenize the water sample. Several packages may be required in order to collect sufficient water for analysis.

System suitability: Test the *Reagent water control* in the apparatus, and record the response, r_W. Repeat the test using the *Standard solution*, and record the response, r_S. Calculate the corrected *Standard solution* response, which is also the limit response, by subtracting the *Reagent water control* response from the response of the *Standard solution*. The theoretical limit of 8.0 mg/L of carbon is equal to the corrected *Standard solution* response, $r_S - r_W$. Test the *System suitability solution* in the apparatus, and record the response, r_{SS}. Calculate the corrected *System suitability solution* response by subtracting the *Reagent water control* response from the response of the *System suitability solution*, $r_{SS} - r_W$. Calculate the percent response efficiency for the *System suitability solution*:

$$\%\ \text{response efficiency} = 100[(r_{SS} - r_W)/(r_S - r_W)]$$

r_{SS} = instrument response to the *System suitability solution*
r_W = instrument response to the *Reagent water control*
r_S = instrument response to the *Standard solution*

The system is suitable if the percent response efficiency is not less than 85% and not more than 115%.

Procedure: Perform the test on the *Water Sample*, and record the response, r_U. The *Water sample* meets the requirements if r_U is not more than the limit response, $r_S - r_W$, determined in the *System suitability* requirements in *Sterile Water*.

ADDITIONAL REQUIREMENTS

• **USP REFERENCE STANDARDS ⟨11⟩**

USP 1,4-Benzoquinone RS
USP Sucrose RS

⟨645⟩ WATER CONDUCTIVITY

INTRODUCTION

Electrical conductivity in water is a measure of the ion-facilitated electron flow through it. Water molecules dissociate into ions as a function of pH and temperature and result in a very predictable conductivity. Some gases, most notably carbon dioxide, readily dissolve in water and interact to form ions, which predictably affect conductivity also. For the purpose of this discussion, these ions and their resulting conductivity can be considered intrinsic to the water.

Water conductivity is also affected by the presence of extraneous ions. The extraneous ions used in modeling the conductivity specifications described below are the chloride and ammonia ions. The conductivity of the ubiquitous chloride ion (at the theoretical endpoint concentration of 0.47 ppm when chloride was a required attribute test in *USP 22* and earlier revisions) and the ammonium ion (at the limit of 0.3 ppm) represents a major portion of the allowed water ionic impurity level. A balancing quantity of anions (such as chloride, to counter the ammonium ion) and cations (such as sodium, to counter the chlor-

ide ion) is included in this allowed impurity level to maintain electroneutrality. Extraneous ions such as these may have a significant effect on the water's chemical purity and suitability for use in pharmaceutical applications.

The procedure in the section *Bulk Water* is specified for measuring the conductivity of waters such as *Purified Water, Water for Injection, Water for Hemodialysis,* and the condensate of *Pure Steam.* The procedure in the section *Sterile Water* is specified for measuring the conductivity of waters such as *Sterile Purified Water, Sterile Water for Injection, Sterile Water for Inhalation,* and *Sterile Water for Irrigation.*

The procedures below shall be performed using instrumentation that has been calibrated, has conductivity sensor cell constants that have been accurately determined, and has a temperature compensation function that has been disabled for *Bulk Water* Stage 1 testing. For both online and offline measurements, the suitability of instrumentation for quality control testing is also dependent on the sampling location(s) in the water system. The selected sampling instrument location(s) must reflect the quality of the water used.

INSTRUMENT SPECIFICATIONS AND OPERATING PARAMETERS

Water conductivity must be measured accurately with calibrated instrumentation. An electrical conductivity measurement consists of the determination of the conductance, *G* (or its inverse, resistance, *R*), of the fluid between and around the electrodes. The conductance (1/*R*) is directly affected by the geometrical properties of the electrodes; i.e., the conductance is inversely proportional to the distance (*d*) between the electrodes and proportional to the area (*A*) of the electrodes. This geometrical ratio (*d*/*A*) is known as the cell constant, Θ. Thus the measured conductance is normalized for the cell constant to determine the conductivity, κ, according to the following equation:

$$\text{conductivity, } \kappa \text{ (S/cm)} = \Theta \text{ (cm}^{-1}\text{)}/R\ (\Omega)$$

It is the cell constant and the resistance measurement that must be verified and adjusted, if necessary.

Cell Constant

The cell constant must be known within ±2%. The cell constant can be verified directly by using a solution of known or traceable conductivity, or indirectly by comparing the instrument reading taken with the conductivity sensor in question to readings from a conductivity sensor of known or traceable cell constant. If necessary, adjust the cell constant following the manufacturer's instrument protocol. The frequency of verification/calibration is a function of the sensor design.

Resistance Measurement

Calibration (or verification) of the resistance measurement is accomplished by replacing the conductivity sensor electrodes with precision resistors having standards traceable to NIST or equivalent national authorities in other countries (accurate to ±0.1% of the stated value) to give a predicted instrument conductivity response. The accuracy of the resistance measurement is acceptable if the measured conductivity with the traceable resistor is within ±0.1 µS/cm of the calculated value according to the equation above. For example, the traceable resistor is 50 kΩ, and the cell constant, Θ, is 0.10 cm^{-1}. The calculated value is 2.0×10^{-6} S/cm or 2.0 µS/cm. The measured value should be 2.0 ± 0.1 µS/cm. The instrument must have a minimum resolution of 0.1 µS/cm on the lowest range.

The target conductivity value(s) should be based on the type of water to be analyzed, and it should be equal to or less than the water conductivity limit for that type of water. Multiple measuring circuits may be embedded in the meter or the sensor, and each circuit may require separate verification or calibration before use. The frequency of recalibration is a function of instrument system design.

System Verification

The cell constant of the user's sensor can be determined with the user's resistance measurement system, or the cell constant can be determined with an independent resistance measurement system. If the cell constant is determined with an independent resistance measurement system, it is recommended that the user verify that the sensor has been properly connected to the resistance measurement system to ensure proper performance. Verification can be made by comparing the conductivity (or resistivity) values displayed by the measuring equipment with those of an external calibrated conductivity-measuring device. The two non–temperature-compensated conductivity (or resistivity) values should be equivalent to or within ±5% of each other, or should have a difference that is acceptable on the basis of product water criticality and/or the water conductivity ranges in which the measurements are taken. The two conductivity sensors should be positioned close enough together to measure the same water sample at the same temperature and water quality.

Temperature Compensation and Temperature Measurements

Because temperature has a substantial effect on conductivity readings of specimens at high and low temperatures, many instruments automatically correct the actual reading to display the value that theoretically would be observed at the nominal temperature of 25°. This is typically done using a temperature sensor embedded in the conductivity sensor and a software algorithm embedded in the instrument. This temperature compensation algorithm may not be accurate for the various water types and impurities. For this reason, conductivity values used in the *Stage 1* test for *Bulk Water* are non–temperature-compensated measurements. Other conductivity tests that are specified for measurement at 25° can use either temperature-compensated or non–temperature-compensated measurements.

A temperature measurement is required for the *Stage 1* test or for the other tests at 25°. It may be made using the temperature sensor embedded in the conductivity cell sensor. An external temperature sensor positioned near the conductivity sensor is also acceptable. Accuracy of the temperature measurement must be ±2°.

BULK WATER

The procedure and test limits in this section are intended for *Purified Water, Water for Injection, Water for Hemodialysis*, the condensate of *Pure Steam*, and any other monographs that specify this section.

This is a three-stage test method to accommodate online or offline testing. Online conductivity testing provides real-time measurements and opportunities for real-time process control, decision, and intervention. Precautions should be taken while collecting water samples for offline conductivity measurements. The sample may be affected by the sampling method, the sampling container, and environmental factors such as ambient carbon dioxide concentration and organic vapors. This procedure can be started at *Stage 2* if offline testing is preferred.

Procedure

STAGE 1

Stage 1 is intended for online measurement or may be performed offline in a suitable container.

1. Determine the temperature of the water and the conductivity of the water with a non–temperature-compensated conductivity reading.

2. Using *Table 1*, find the temperature value that is NMT the measured temperature, i.e., the next lower temperature. The corresponding conductivity value on this table is the limit. [NOTE—Do not interpolate.]

3. If the measured conductivity is NMT the table value determined in step 2, the water meets the requirements of the test for conductivity. If the conductivity is higher than the table value, proceed with *Stage 2*.

Table 1. Stage 1—Temperature and Conductivity Requirements
(for non–temperature-compensated conductivity measurements only)

Temperature	Conductivity Requirement (µS/cm)
0	0.6
5	0.8
10	0.9
15	1.0
20	1.1
25	1.3
30	1.4
35	1.5
40	1.7
45	1.8
50	1.9
55	2.1
60	2.2
65	2.4
70	2.5

Table 1. Stage 1—Temperature and Conductivity Requirements
(for non–temperature-compensated conductivity measurements only) *(Continued)*

Temperature	Conductivity Requirement (µS/cm)
75	2.7
80	2.7
85	2.7
90	2.7
95	2.9
100	3.1

STAGE 2

4. Transfer a sufficient amount of water to a suitable container, and stir the test specimen. Adjust the temperature, if necessary, and, while maintaining it at 25 ± 1°, begin vigorously agitating the test specimen while periodically observing the conductivity. When the change in conductivity (due to uptake of atmospheric carbon dioxide) is less than a net of 0.1 µS/cm per 5 min, note the conductivity. [NOTE—Conductivity measurements at this stage may be temperature-compensated to 25° or non–temperature-compensated.]

5. If the conductivity is not greater than 2.1 µS/cm, the water meets the requirements of the test for conductivity. If the conductivity is greater than 2.1 µS/cm, proceed with *Stage 3*.

STAGE 3

6. Perform this test within approximately 5 min of the conductivity determination in step 5, while maintaining the sample temperature at 25 ± 1°. Add a saturated potassium chloride solution to the same water sample (0.3 mL per 100 mL of the test specimen), and determine the pH to the nearest 0.1 pH unit, as directed in *pH* 〈791〉.

7. Referring to *Table 2*, determine the conductivity limit at the measured pH value. If the measured conductivity in step 4 is NMT the table value determined in step 6, the water meets the requirements of the test for conductivity. If either the measured conductivity is greater than this value or the pH is outside the range of 5.0–7.0, the water does not meet the requirements of the test for conductivity.

Table 2. Stage 3—pH and Conductivity Requirements
(for atmosphere- and temperature-equilibrated samples only)

pH	Conductivity Requirement (µS/cm)
5.0	4.7
5.1	4.1
5.2	3.6
5.3	3.3
5.4	3.0
5.5	2.8
5.6	2.6
5.7	2.5
5.8	2.4
5.9	2.4
6.0	2.4
6.1	2.4
6.2	2.5
6.3	2.4
6.4	2.3
6.5	2.2
6.6	2.1

Table 2. Stage 3—pH and Conductivity Requirements
(for atmosphere- and temperature-equilibrated samples only) *(Continued)*

pH	Conductivity Requirement (µS/cm)
6.7	2.6
6.8	3.1
6.9	3.8
7.0	4.6

STERILE WATER

The procedure and test limits are intended for *Sterile Purified Water, Sterile Water for Injection, Sterile Water for Inhalation,* and *Sterile Water for Irrigation,* and any other monographs that specify this section. The sterile waters are derived from *Purified Water* or *Water for Injection,* and therefore have been determined to be compliant with the *Bulk Water* requirements before being stored in the container. The specification provided represents the maximum allowable conductivity value, taking into consideration the limitation of the measurement method and reasonable container leaching. Such specification and the sampling volume choices should be defined and validated on the basis of the intended purpose of the water.

Procedure

Obtain a sample that suitably reflects the quality of water used. Before opening, vigorously agitate the package to homogenize the water sample. Several packages may be required to collect sufficient water for analysis.

Transfer a sufficient amount of water to a suitable container, and stir the test specimen. Adjust the temperature, if necessary, and, while maintaining it at 25 ± 1°, begin vigorously agitating the test specimen while periodically observing the conductivity. When the change in conductivity (due to uptake of ambient carbon dioxide) is less than a net of 0.1 µS/cm per 5 min, note the conductivity.

For containers with a nominal volume of 10 mL or less, if the conductivity is NMT 25 µS/cm, the water meets the requirements. For containers with a nominal volume greater than 10 mL, if the conductivity is NMT 5 µS/cm, the water meets the requirements.

〈651〉 CONGEALING TEMPERATURE

The temperature at which a substance passes from the liquid to the solid state upon cooling is a useful index to purity if heat is liberated when the solidification takes place, provided that any impurities present dissolve in the liquid only, and not in the solid. Pure substances have a well-defined freezing point, but mixtures generally freeze over a range of temperatures. For many mixtures, the congealing temperature, as determined by strict adherence to the following empirical methods, is a useful index of purity. The method for determining congealing temperatures set forth here is applicable to substances that melt between −20° and 150°, the range of the thermometer used in the bath. The congealing temperature is the maximum point (or lacking a maximum, the point of inflection) in the temperature-time curve.

APPARATUS

Assemble an apparatus similar to that *illustrated,*

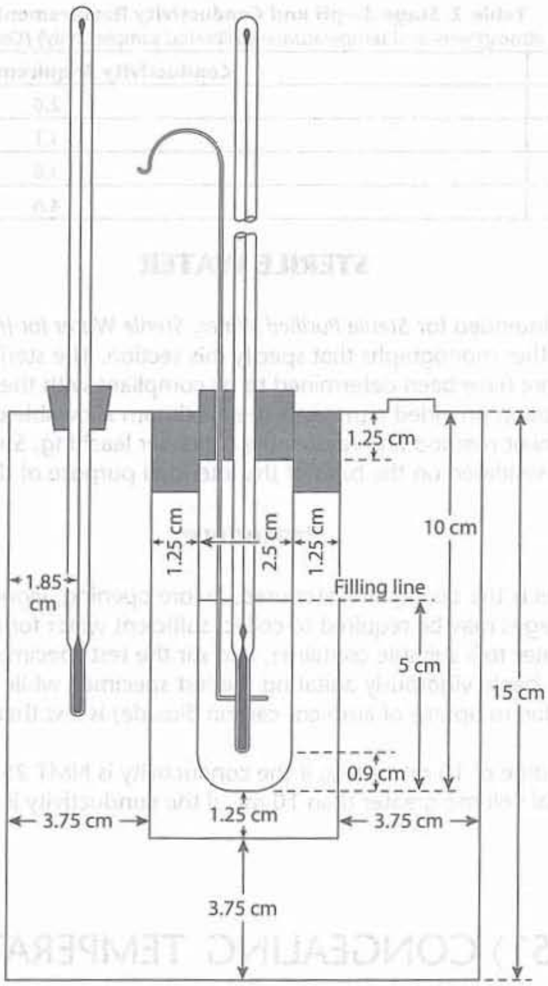

Congealing Temperature Apparatus

in which the container for the substance is a 25- × 100-mm test tube. This is provided with a suitable, short-range thermometer suspended in the center, and a wire stirrer, about 30 cm long, bent at its lower end into a horizontal loop around the thermometer. Use a thermometer having a range not exceeding 30°, graduated in 0.1° divisions, and calibrated for, but not used at, 76-mm immersion. A suitable series of thermometers, covering a range from −20° to +150°, is available as the ASTM E1 series 89C through 96C. Other temperature-measuring devices may be used if they are validated for this procedure (see *General Notices, 6.80.30. Temperature Reading Devices*). Dimensions should be within ±20% of those given in the illustration.

The specimen container is supported, by means of a cork, in a suitable water-tight cylinder about 50 mm in internal diameter and 11 cm in length. The cylinder, in turn, is supported in a suitable bath sufficient to provide not less than a 37-mm layer surrounding the sides and bottom of the cylinder. The outside bath is provided with a suitable thermometer.

PROCEDURE

Melt the substance, if a solid, at a temperature not exceeding 20° above its expected congealing point, and pour it into the test tube to a height of 50 to 57 mm. Assemble the apparatus with the bulb of the test tube thermometer immersed halfway between the top and bottom of the specimen in the test tube. Fill the bath to about 12 mm from the top of the tube with suitable fluid at a temperature 4° to 5° below the expected congealing point.

In case the substance is a liquid at room temperature, carry out the determination using a bath temperature about 15° below the expected congealing point.

When the test specimen has cooled to about 5° above its expected congealing point, adjust the bath to a temperature 7° to 8° below the expected congealing point. Stir the specimen continuously during the remainder of the test by moving the loop up and down between the top and bottom of the specimen, at a regular rate of 20 complete cycles per minute.

Congelation frequently may be induced by rubbing the inner walls of the test tube with the thermometer, or by introducing a small fragment of the previously congealed substance. Pronounced supercooling may cause deviation from the normal pattern of temperature changes. If the latter occurs, repeat the test, introducing small particles of the material under test in solid form at 1° intervals as the temperature approaches the expected congealing point.

Record the reading of the test tube thermometer every 30 seconds. Continue stirring only so long as the temperature is gradually falling, stopping when the temperature becomes constant or starts to rise slightly. Continue recording the temperature in the test tube every 30 seconds for at least 3 minutes after the temperature again begins to fall after remaining constant.

The average of not less than four consecutive readings that lie within a range of 0.2° constitutes the congealing temperature. These readings lie about a point of inflection or a maximum, in the temperature-time curve, that occurs after the temperature becomes constant or starts to rise and before it again begins to fall. The average to the nearest 0.1° is the congealing temperature.

⟨659⟩ PACKAGING AND STORAGE REQUIREMENTS

(A portion of the *Associated Components* section of this chapter will become official on May 1, 2019, as indicated.)

Change to read:

▲INTRODUCTION

The purpose of this chapter is to provide packaging definitions, auxiliary packaging information, and storage condition definitions relevant to the storage and distribution of active ingredients, excipients, and medical products, such as pharmaceuticals, devices, combination products (e.g., drug-eluting stents), and dietary supplements.

PACKAGING

Packaging materials must not interact physically or chemically with a packaged article in a manner that causes its safety, identity, strength, quality, or purity to fail to conform to established requirements. Any plastic material used to construct a *Packaging system* must meet the applicable requirements of *Plastic Materials of Construction* ⟨661.1⟩. All *Packaging systems* must meet the applicable requirements specified in *Containers—Glass* ⟨660⟩, *Plastic Packaging Systems for Pharmaceutical Use* ⟨661.2⟩, and *Auxiliary Packaging Components* ⟨670⟩. All elastomeric closures must meet the applicable requirements in *Elastomeric Closures for Injections* ⟨381⟩.

Every monograph in *USP–NF* must have packaging and storage requirements. For the packaging portion of the statement, the choice of containers is provided in this chapter. For active pharmaceutical ingredients (APIs), the choice would be a tight, well-closed, or, where needed, light-resistant container. For excipients, given their typical presentation as large-volume commodity items (*Packaging systems* ranging from drums to tank cars), a well-closed container is an appropriate default requirement. Articles must be protected from moisture, freezing, and excessive heat (see *General Definitions*) when no specific directions or limitations are provided.

The compendial requirements for the use of specified containers apply also to articles packaged by *Dispensers, Repackagers*, or other individuals, unless otherwise indicated in the individual drug product monograph.

POISON PREVENTION PACKAGING ACT

This act, which is administered by the United States Consumer Product Safety Commission (CPSC), requires special packaging for most human oral prescription drugs, oral controlled drugs, certain non-oral prescription drugs, certain dietary supplements, and many over-the-counter (OTC) drug preparations, to protect the public from personal injury or illness from misuse of these preparations (16 CFR §1700.14).

The primary packaging of substances regulated under the Poison Prevention Packaging Act (PPPA) must comply with the special packaging standards (16 CFR §1700.15). These apply to all packaging types, including reclosable, non-reclosable, and unit-dose types.

Special packaging is not required for drugs dispensed within a hospital setting for inpatient administration. Also, special packaging does not need to be used by manufacturers and packagers of bulk-packaged prescription drugs that will be repackaged by the pharmacist. PPPA-regulated prescription drugs may be dispensed in non-*Child-resistant packaging* upon the request of the purchaser or when directed in a legitimate prescription (15 USC §1473).

Manufacturers or packagers of PPPA-regulated OTC preparations are allowed to package one size in non-*Child-resistant packaging* as long as popular-size, special packages are also supplied. The non-*Child-resistant packaging* requires special labeling (16 CFR §1700.5).

TEMPERATURE AND STORAGE

Specific directions are stated in some monographs with respect to storage conditions (e.g., the temperature or humidity) at which an article must be stored and shipped. Such directions apply except where the label on the article has different storage conditions that are based on stability studies. Where no specific directions or limitations are provided in the article's labeling, articles must be protected from moisture, freezing, and excessive heat, and, where necessary, from light during shipping and distribution. Drug substances are exempt from this standard.

GENERAL DEFINITIONS

Packaging Definitions

Packaging system (also referred to as a Container–closure system): The sum of *Packaging components* and materials that together contain and protect the article. This includes *Primary packaging components* as well as *Secondary packaging components* when such components are required to provide additional protection.
Container: A receptacle that holds an intermediate compound, API, excipient, or dosage form, and is in direct contact with the article (e.g., ampules, vials, bottles, syringes, and pen injectors).
Closure: A material that seals an otherwise open space of a *Container* and provides protection for the contents. It also provides access to the contents of the *Container* (e.g., screw caps and stoppers).
Packaging component: Any single part of the *Package* or *Container–closure system,* including: the *Container* (e.g., ampules, syringes, vials, and bottles); *Closures* (e.g., screw caps and stoppers); ferrules and overseals; *Closure* liners (e.g., tube cartridge liners); inner seals; administration ports; overwraps; administration accessories; labels; cardboard boxes; and shrink wrap.
Primary packaging component: A *Packaging component* that is in direct contact with or may come into direct contact with the article.
Secondary packaging component: A *Packaging component* that is in direct contact with a *Primary packaging component* and may provide additional protection for the article.
Tertiary packaging component: A *Packaging component* that is in direct contact with a *Secondary packaging component* and may provide additional protection for the article during transportation and/or storage.
Ancillary component: A component or entity that may come into contact with a *Tertiary packaging component* during the distribution, storage, and/or transportation of the packaged article (e.g., pallets, skids, and shrink wrap).
Associated component: A *Packaging component* that is typically intended to deliver the drug article to the patient but is not stored in contact with the article for its entire shelf life (e.g., spoons, *Dosing cups,* and dosing syringes).
Materials of construction: The materials (e.g., glass, plastic, elastomers, and metal) of which a *Packaging component* consists.
Small-volume injection (Small-volume parenteral): An injectable dosage form that is packaged in *Containers* labeled as containing 100 mL or less.
Large-volume injection (Large-volume parenteral): An injectable dosage form that is packaged in *Containers* labeled as containing more than 100 mL.
Child-resistant packaging: A *Packaging system* designed or constructed to meet CPSC standards pertaining to opening by children (16 CFR §1700.20 et seq and 16 CFR §1700.15).
Senior-friendly packaging: A *Packaging system* designed or constructed to meet CPSC standards pertaining to opening by senior adults (16 CFR §1700.15 and 16 CFR §1700.20).
Restricted delivery system: A *Packaging system* designed or constructed to restrict (control) the amount of the drug product that may be delivered in order to limit unintended access by children and other similarly vulnerable populations. *Restricted delivery systems* should meet and may exceed CPSC standards for special packaging [*Child-resistant* and *Senior-friendly packaging* (16 CFR §1700.15 et seq)]. For oral medicinal liquids, surface and flow characteristics vary. It is the responsibility of the manufacturer to ensure that all components of the *Restricted delivery system* provide the intended safety protection. One component of the *Restricted delivery system* is the flow restrictor, which is a *Packaging component* that restricts the flow of liquid. The flow restrictor may be used as part of a *Restricted delivery system* or as an adaptor to facilitate use of a measuring device for oral medicinal liquids. A flow restrictor should not compromise CPSC standards for special packaging [*Child-resistant* and *Senior-friendly packaging* (16 CFR §1700.15 et seq)].
Tamper-evident packaging: A *Packaging system* that may not be accessed without obvious destruction of the seal or some portion of the *Packaging system. Tamper-evident packaging* must be used for sterile drug products intended for ophthalmic or otic use, except where extemporaneously compounded for immediate dispensing on prescription. Drug products intended for sale without prescription are also required to comply with the *Tamper-evident packaging* and labeling requirements of the Food and Drug Administration (FDA) where applicable (21 CFR §221.132). Preferably, the immediate *Container* and/or the outer *Container* or protective packaging used by a manufacturer or distributor for all dosage forms that are not specifically exempt is designed to show evidence of any tampering with the contents.
Reclosable packaging: A package that after it has been initially opened is capable of being reclosed with a similar degree of security and is capable of being used a sufficient number of times to dispense the total contents without loss of security. *Reclosable packaging* may incorporate child-resistance capabilities.

Non-reclosable packaging: A package or part of a package that cannot be closed again after all or part of the contents have been removed. Examples of *Non-reclosable packaging* are blisters, sachets, strips, and other *Single-unit containers. Non-reclosable packaging* may include cold-formed foil blisters, foil strip packs, and PVC/Aclar® combining multilayer materials that are thermo-formed or cold-formed foil blisters. *Non-reclosable packaging* may be child resistant depending on the intended use and place of use. Household non-reclosables are subject to the PPPA as defined in 16 CFR §1700.14.
Hermetic container: A *Container–closure system* that is impervious to air or any other gas under the ordinary or customary conditions of handling, shipment, storage, and distribution.
Tight container: A *Container–closure system* that protects the contents from contamination by extraneous liquids, solids, or vapors; from loss of the article; and from efflorescence, deliquescence, or evaporation under the ordinary or customary conditions of handling, shipment, storage, and distribution, and is capable of tight reclosure. Where a tight container is specified, it may be replaced by a hermetic container for a single dose of an article. [NOTE—Where packaging and storage in a tight container or well-closed container is specified in the individual monograph, the container used for an article when dispensed on prescription meets the requirements in *Containers—Performance Testing* ⟨671⟩.]
Well-closed container: A *Container–closure system* that protects the contents from contamination by extraneous solids and from loss of the article under the ordinary or customary conditions of handling, shipment, storage, and distribution. See ⟨671⟩.
Light-resistant container: A *Container–closure system* that protects the contents from the effects of light by virtue of the specific properties of the material of which it is composed, including any coating applied to it. A clear and colorless or a translucent container may be made light-resistant by means of an opaque covering or by use of secondary packaging, in which case the label of the container bears a statement that the opaque covering or secondary packaging is needed until the articles are to be used or administered. Where it is directed to "protect from light" in an individual monograph, preservation in a light-resistant container is intended. See *Containers—Performance Testing* ⟨671⟩, *Spectral Transmission.*
Equivalent container–closure system: A *Container–closure system* that is as protective as or more protective than the original manufacturer's *Packaging system* in terms of moisture-vapor transmission rate, oxygen transmission, light transmission, and compatibility. System equivalency extends to any special protective materials, such as those for seals or desiccants associated with the original *Packaging system.*

Table 1. Packaging Systems Definitions: Injection versus Noninjection

Injection	Noninjection
Multiple-dose	Multiple-unit
Single-dose	Single-unit
	Unit-dose
	Unit-of-use
Pharmacy bulk package	
Imaging bulk package	

Injection Packaging Systems

Multiple-dose container (also referred to as Multi-dose): A *Container–closure system* that holds a sterile medication for parenteral administration (injection or infusion) that has met antimicrobial effectiveness testing requirements, or is excluded from such testing requirements by FDA regulation. A *Multiple-dose container* is intended to contain more than one dose of a drug product. When space permits, a *Multiple-dose container* is labeled as such. *Multiple-dose containers* are generally expected to contain 30 mL or less of medications. The beyond-use date for an opened or entered (e.g., needle-punctured) *Multiple-dose container* is 28 days unless otherwise specified by the manufacturer on the label. An example of a *Multiple-dose container* is a vial.
Single-dose container: A *Container–closure system* that holds a sterile medication for parenteral administration (injection or infusion) that is not required to meet the antimicrobial effectiveness testing requirements. A *Single-dose container* is designed for use with a single patient as a single injection/infusion.[1] When space permits, a *Single-dose container* is labeled as such and should include on the label appropriate discard statements. Examples of *Single-dose containers* are vials, ampules, and prefilled syringes.
Pharmacy bulk package: A *Container–closure system* of a sterile preparation for parenteral use that contains many single doses. The contents are intended for use in a pharmacy admixture program and are restricted to the preparation of admixtures for infusion or, through a sterile transfer device, for the filling of empty sterile syringes. The *Closure* must be penetrated only one time after constitution, if necessary, with a suitable sterile transfer device or dispensing set that allows measured dispensing of the contents. The *Pharmacy bulk package* is to be used only in a suitable work area such as a laminar flow hood (or an equivalent clean-air compounding area). Designation as a *Pharmacy bulk package* is limited to injection, for injection, or injectable emulsion dosage forms as defined in *Nomenclature* ⟨1121⟩, *General Nomenclature Forms.*

Pharmacy bulk packages, although containing more than one single dose, are exempt from the *Multiple-dose container* volume limit of 30 mL and the requirement that they contain a substance or suitable mixture of substances to prevent the growth of microorganisms. See ⟨7⟩ for labeling requirements.

[1] Exceptions may be considered only under conditions described in *Pharmaceutical Compounding—Sterile Preparations* ⟨797⟩.

Imaging bulk package: A container of a sterile preparation for parenteral use that contains many single doses of a contrast agent (medical imaging drug product) for use with a medical imaging device. The contents are restricted to use in direct conjunction with a device with features to mitigate the risk of cross-contamination (i.e., an automated contrast injection system or contrast management system approved or cleared for use with an *Imaging bulk package*). The sterility assurance of the *Imaging bulk package* contents in part is dependent upon the automated contrast injection system or the contrast management system.

The *Imaging bulk package* is to be used only in a room designated for radiological procedures that involve intravascular administration of a contrast agent. Using aseptic technique, the *Imaging bulk package* closure must be penetrated only one time with a suitable sterile component of the automated contrast injection system or contrast management system. If the integrity of the *Imaging bulk package* and the delivery system cannot be assured through direct continuous supervision, the *Imaging bulk package* and all associated disposables for the automated contrast injection system or contrast management system should be discarded.

Designation as an *Imaging bulk package* is limited to injection, for injection, or injectable emulsion dosage forms as defined in *Nomenclature* ⟨1121⟩, *General Nomenclature Forms. Imaging bulk packages,* although containing more than one single dose, are exempt from the multiple-dose container volume limit of 30 mL. The contents of the *Imaging bulk package* must have demonstrated the ability to limit the growth of microorganisms over the labeled period of use.

Where a container is offered as an *Imaging bulk package,* the label must (1) state prominently "Imaging Bulk Package" and, in juxtaposition with this statement, include the following use statement: "For use only with an automated contrast injection system or contrast management system approved or cleared for use with this contrast agent in this Imaging Bulk Package"; (2) bear a statement limiting the time frame in which the container may be used once it has been entered, provided it is held under the labeled storage conditions; and (3) bear the statement, "See drug and device labeling for information on devices indicated for use with this Imaging Bulk Package and techniques to help assure safe use".

Noninjection Packaging Systems

Multiple-unit container: A *Container–closure system* that permits withdrawal of successive portions of a noninjection article without changing the safety, strength, quality, or purity of the remaining portion (e.g., bottle of capsules, tablets, and oral or topical liquids).

Single-unit container: A *Container–closure system* that holds a quantity of a noninjection article intended for administration as a single dose or a single finished device intended for use promptly after the *Packaging system* is opened.

Unit-dose container: A single-unit *Container–closure system* for an article intended for administration by other than the parenteral route as a single dose.

Unit-of-use container: A *Container–closure system* that contains a specific quantity of an article that is intended to be dispensed as such without further modification except for the addition of appropriate labeling (see *Labeling* ⟨7⟩). It is not permitted to repackage *Unit-of-use containers* for sale.

Miscellaneous

Repackaging: The act of removing a drug product from the original manufacturer's *Packaging system* and placing it into another *Packaging system,* usually one of smaller size.

Repackager: A firm that repackages drug products or medical devices for distribution (e.g., for resale to distributors, hospitals, or pharmacies). For drug products, this applies to a function that is beyond the regular practice of a pharmacy. The distribution is not patient-specific, in that there are no prescriptions. Repackagers and relabelers of medical devices are also required to register and list and meet the provisions described in 21 CFR §807.

Contract packager/contract repackager: A firm that is contracted by another organization, such as a manufacturer, to package bulk into a marketed *Container* of a drug product. A *Contract packager* does not take ownership from the manufacturer and generally receives the assigned expiration date from the manufacturer.

Dispenser: A licensed or registered practitioner who is legally responsible for providing the patient with a preparation that is in compliance with a prescription or a medication order and contains a specific patient label. In addition, dispensers may prepare limited quantities in anticipation of a prescription or medication order from a physician. *Dispensers* are governed by the board of pharmacy of the individual state. The terms "dispenser" and "pharmacy" are used interchangeably.

Beyond-use date: See ⟨7⟩.

Expiration date: See ⟨7⟩.

Black closure system or black bands: The use of a *Black closure system* on a vial (e.g., a black cap overseal and a black ferrule to hold the elastomeric closure) or the use of a *Black band* or series of bands above the constriction on an ampule is prohibited, except for *Labeling* ⟨7⟩, *Potassium Chloride for Injection Concentrate.*

INJECTION PACKAGING

Packaging for sterile products intended for injection must be validated as meeting the containment and protection requirements that are essential for maintaining the article's quality. Refer to *Package Integrity Evaluation—Sterile Products* ⟨1207⟩, *Pack-*

age Integrity Testing in the Product Life Cycle—Test Method Selection and Validation ⟨1207.1⟩, *Package Integrity Leak Test Technologies* ⟨1207.2⟩, and *Package Seal Quality Test Technologies* ⟨1207.3⟩ for further information regarding sterile product *Container* closure integrity testing and validation. *Closures* for *Multiple-dose containers* permit the withdrawal of the contents without removal or destruction of the *Closure*. The *Closure* permits penetration by a needle and, upon withdrawal of the needle, closes at once, protecting the contents against contamination. Refer to ⟨381⟩ for *Closure* reseal tests that are useful for screening multiple-dose *Closures* for their reseal properties. Additional testing may be needed to ensure that the specific *Closure* selected for a product package is able to prevent loss of product contents and microbial contamination under anticipated conditions of multiple entry and use. Piggyback *Packaging systems* are usually intravenous infusion *Container–closure systems* that are used to administer a second infusion through a connector of some type or an injection port on the administration set of the first fluid, thereby avoiding the need for another injection site on the patient's body. Piggyback *Packaging systems* also are known as secondary infusion containers.

The volume of injection in a *Single-dose container* provides the amount specified for one-time parenteral administration, and in no case is more than sufficient to permit the withdrawal and administration of 1 L. Preparations intended for intraspinal, intracisternal, or peridural administration are packaged in *Single-dose containers* only. Unless otherwise specified in the individual monograph, a *Multiple-dose container* contains a volume of injection sufficient to permit the withdrawal of NMT 30 mL.

The following injections are exempt from the 1-L restriction of the foregoing requirements relating to packaging:

- Injections packaged for extravascular use as irrigation solutions or peritoneal dialysis solutions.
- Injections packaged for intravascular use as parenteral nutrition or as replacement or substitution fluid to be administered continuously during hemofiltration.

Injections packaged for intravascular use that may be used for intermittent, continuous, or bolus replacement fluid administration during hemodialysis or other procedures, unless excepted above, must conform to the 1-L restriction. Injections labeled for veterinary use are exempt from the packaging and storage requirements concerning the limitation to single-dose *Packaging systems* and the limitation on the volume of *Multiple-dose containers*.

Packaging for constitution: *Containers*, including the *Closures*, for dry solids intended for injection must not interact physically or chemically with the preparation in any manner that alters the strength, quality, or purity beyond the official requirements under the ordinary or customary conditions of handling, shipment, storage, sale, and use. A *Packaging system* for a sterile solid permits the addition of a suitable solvent and withdrawal of portions of the resulting solution or suspension in such manner that the sterility of the product is maintained. Where the Assay in a monograph provides a procedure for the Sample solution, in which the total withdrawable contents are to be withdrawn from a *Single-dose container* with a hypodermic needle and syringe, the contents are to be withdrawn as completely as possible into a dry hypodermic syringe of a rated capacity not exceeding three times the volume to be withdrawn and fitted with a 21-gauge needle NLT 2.5 cm (1 in) in length. Care must be taken to expel any air bubbles, and the contents are then discharged into a *Container* for dilution and assay.

MEDICAL GAS PACKAGING

Gas cylinder: A metallic *Packaging system* constructed of steel or aluminum and designed to hold medical gases under pressure; these gases may include: Carbon Dioxide USP, Helium USP, Medical Air USP, nitric oxide, Nitrous Oxide USP, Nitrogen NF, and Oxygen USP. As a safety measure, for carbon dioxide, helium, medical air, nitrous oxide, and oxygen, the Pin-Index Safety System of matched fittings is recommended for cylinders of Size E or smaller.

Change to read:

ASSOCIATED COMPONENTS

Many *Associated components* are graduated for measurement and dose administration. *Associated components* can be packaged with the drug product or sold and purchased separately. It is the responsibility of the manufacturer to ensure that the appropriate measurement and dosing component is provided or that a general purpose component, such as those described in this section, is specified for delivering the appropriate amount/dose with the intended accuracy. Liquid preparations have unique surface and flow characteristics. Consequently, the volume delivered from a measurement/dosing component may vary for each preparation.

The graduated *Associated components* described in this section are for general use and should be composed of safe materials. Graduated markings should be legible, indelible, and on an extraoral surface that does not contact the product.

●The associated volume markings must be in metric units only and limited to a single measurement scale that corresponds with the dosing instructions on the OTC or prescription container label (see *Prescription Container Labeling* ⟨17⟩). Under expected conditions of use, the volume error incurred in measuring liquids for individual dose administration by means of such graduated components should be NMT 10% of the indicated amount of the liquid preparation with which the graduated component will be used.● (Official 1-May-2019)

Dosing cup: A measuring device consisting of a small cup that may be packaged with oral liquid articles.

Dosing spoon: A measuring device consisting of a bowl and handle that may be packaged with oral liquid articles. The handle may be a graduated tube.

General Chapters

Medicine dropper: A measuring device consisting of a transparent or translucent barrel or tube that is generally fitted with a collapsible bulb. It may be packaged with oral liquid articles.

Oral syringe: A measuring device consisting of a plunger and barrel made of transparent or translucent plastic material and a seal on the end. It may be packaged with oral liquid articles. The syringe should deliver a measured amount of a liquid drug product.

TEMPERATURE AND STORAGE DEFINITIONS

Freezer: A place in which the temperature is controlled between −25° and −10° (−13° and 14° F). It is noted that, in some instances, articles may have a recommended storage condition below −20° (−4° F). In such cases, the temperature of the storage location should be controlled to ±10°.

Refrigerator: A cold place in which the temperature is controlled between 2° and 8° (36° and 46° F).

Cold: Any temperature not exceeding 8° (46° F).

Cool: Any temperature between 8° and 15° (46° and 59° F). [NOTE—An article for which storage in a cool place is directed may, alternatively, be stored and shipped as refrigerated, unless otherwise specified by the individual monograph.]

Room temperature (also referred to as Ambient temperature): The temperature prevailing in a working environment.

Controlled room temperature: The temperature maintained thermostatically that encompasses the usual and customary working environment of 20°–25° (68°–77° F). The following conditions also apply.

Mean kinetic temperature not to exceed 25°. Excursions between 15° and 30° (59° and 86° F) that are experienced in pharmacies, hospitals, and warehouses, and during shipping are allowed. Provided the mean kinetic temperature does not exceed 25°, transient spikes up to 40° are permitted as long as they do not exceed 24 h. Spikes above 40° may be permitted only if the manufacturer so instructs.

Articles may be labeled for storage at "controlled room temperature" or at "20°–25°", or other wording based on the same mean kinetic temperature [see also *Good Storage and Distribution Practices for Drug Products* ⟨1079⟩, *Quality Management System, Mean Kinetic Temperature (MKT) Calculation*].

An article for which storage at *Controlled room temperature* is directed may, alternatively, be stored and shipped in a cool place or refrigerated, unless otherwise specified in the individual monograph or on the label.

Warm: Any temperature between 30° and 40° (86° and 104° F).

Excessive heat: Any temperature above 40° (104° F).

Dry place: A place that does not exceed 40% average relative humidity at 20° (68° F) or the equivalent water vapor pressure at other temperatures. The determination may be made by direct measurement at the place. Determination is based on NLT 12 equally spaced measurements that encompass either a season, a year, or, where recorded data demonstrate, the storage period of the article. There may be values of up to 45% relative humidity provided that the average value does not exceed 40% relative humidity. Storage in a *Container* validated to protect the article from moisture vapor, including storage in bulk, is considered a *Dry place*.

Protect from freezing: The *Container* label will bear an appropriate instruction to protect the article from freezing in cases where freezing exposes an article to loss of strength or potency or to destructive alteration of its characteristics. These risks are present in addition to the risk that the *Container* may break if exposed to freezing temperatures.

Protect from light: Where light subjects an article to loss of strength or potency or to destructive alteration of its characteristics, the *Container* label bears an appropriate instruction to protect the article from light. The article must be packaged in a light-resistant *Container*.▲USP40

⟨660⟩ CONTAINERS—GLASS

DESCRIPTION

Glass containers for pharmaceutical use are intended to come into direct contact with pharmaceutical products. Glass used for pharmaceutical containers is either borosilicate (neutral) glass or soda-lime-silica glass. Borosilicate glass contains significant amounts of boric oxide, aluminum oxide, and alkali and/or alkaline earth oxides in the glass network. Borosilicate glass has a high hydrolytic resistance and a high thermal shock resistance due to the chemical composition of the glass itself; it is classified as Type I glass. Soda-lime-silica glass is a silica glass containing alkaline metal oxides, mainly sodium oxide, and alkaline earth oxides, mainly calcium oxide, in the glass network. Soda-lime-silica glass has a moderate hydrolytic resistance due to the chemical composition of the glass itself; it is classified as Type III glass. Suitable treatment of the inner surface of Type III soda-lime-silica glass containers will raise the hydrolytic resistance from a moderate to a high level, changing the classification of the glass to Type II.

The following recommendations can be made as to the suitability of the glass type for containers for pharmaceutical products, based on the tests for hydrolytic resistance. Type I glass containers are suitable for most products for parenteral and non-

parenteral uses. Type II glass containers are suitable for most acidic and neutral aqueous products for parenteral and nonparenteral uses. Type II glass containers may be used for alkaline parenteral products where stability data demonstrate their suitability. Type III glass containers usually are not used for parenteral products or for powders for parenteral use, except where suitable stability test data indicate that Type III glass is satisfactory.

The inner surface of glass containers may be treated to improve hydrolytic resistance. The outer surface of glass containers may be treated to reduce friction or for protection against abrasion or breakage. The outer surface treatment is such that it does not contaminate the inner surface of the container.

Information on chemical composition of glass types, the formation of glass containers, and factors that influence inner surface durability of glass containers is provided in *Evaluation of the Inner Surface Durability of Glass Containers* ⟨1660⟩. This chapter also contains recommended approaches to evaluate the potential of a drug product to cause the formation of glass particles and delamination.

Glass may be colored to provide protection from light by the addition of small amounts of metal oxides and is tested as described in *Spectral Transmission for Colored Glass Containers*. A clear and colorless container that is made light resistant by means of an opaque enclosure (see *Packaging and Storage Requirements* ⟨659⟩, *Light-Resistant*) is exempt from the requirements for spectral transmission.

SPECIFIC TESTS

The *Glass Grains Test* combined with the *Surface Glass Test* for hydrolytic resistance determines the glass type. The hydrolytic resistance is determined by the quantity of alkali released from the glass under the conditions specified. This quantity of alkali is extremely small in the case of the more resistant glasses, thus calling for particular attention to all details of the tests and the use of apparatus of high quality and precision. Conducting these tests in conjunction with a glass standard reference material (SRM) on a routine basis will help to ensure the accuracy of the method. Reference materials are available for both borosilicate glass (SRM 623) and soda-lime-silica glass (SRM 622) from the National Institute of Standards and Technology. The tests should be conducted in an area relatively free from fumes and excessive dust. Test selection is shown in *Table 1* and *Table 2*.

Table 1. Determination of Glass Types

Container Type	Test	Reason
I, II, III	*Glass Grains Test*	Distinguishes Type I borosilicate glass from Type II and III soda-lime-silica glass

The inner surface of glass containers is the contact surface for pharmaceutical preparations, and the quality of this surface is determined by the *Surface Glass Test* for hydrolytic resistance. The *Surface Etching Test* may be used to determine whether high hydrolytic resistance is due to chemical composition or to surface treatement. Alternatively, the comparison of data from the *Glass Grains Test* and the *Surface Glass Test* may be used in *Table 2*.

Table 2. Determination of Inner Surface Hydrolytic Resistance

Container Type	Test	Reason
I, II, III	*Surface Glass Test*	Determines hydrolytic resistance of inner surface; distinguishes between *Type I* and *Type II* containers with high hydrolytic resistance and *Type III* containers with moderate hydrolytic resistance
I, II	*Surface Etching Test* or comparison of *Glass Grains Test* and *Surface Glass Test* data	Where it is necessary, determines whether high hydrolytic resistance is due to inner surface treatment or to the chemical composition of the glass containers

Glass containers must comply with their respective specifications for identity and surface hydrolytic resistance to be classified as Type I, II, or III glass. Type I or Type II containers for aqueous parenteral products are tested for extractable arsenic.

Hydrolytic Resistance

APPARATUS

Autoclave: For these tests, use an autoclave capable of maintaining a temperature of 121 ± 1°, equipped with a thermometer, or a calibrated thermocouple device, allowing a temperature measurement independent of the autoclave system; a suitable recorder; a pressure gauge; a vent cock; and a tray of sufficient capacity to accommodate the number of containers needed to carry out the test above the water level. Clean the autoclave and other apparatus thoroughly with Purified Water before use.

Mortar and pestle: Use a hardened-steel mortar and pestle, made according to the specifications in *Figure 1*.

General Chapters

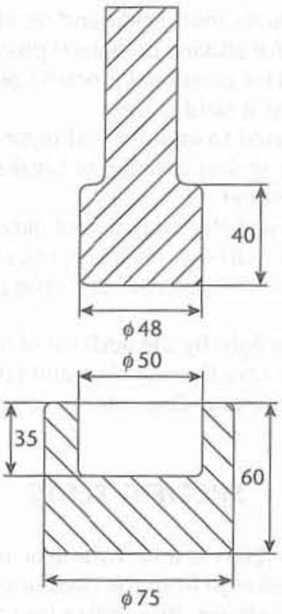

Figure 1. Mortar and pestle for pulverizing glass.

Other apparatus: Also required are a set of three square-mesh stainless steel sieves mounted on frames consisting of US Sieve Nos. 25, 40, and 50 (see *Particle Size Distribution Estimation by Analytical Sieving* 〈786〉, *Table 1. Sizes of Standard Sieve Series in Range of Interest*); a mechanical sieve-shaker or a sieving machine that may be used to sieve the grains; a tempered, magnetic steel hammer; a permanent magnet; weighing bottles; stoppers; metal foil (e.g., aluminum, stainless steel); a hot air oven, capable of maintaining 140 ± 5°; a balance, capable of weighing up to 500 g with an accuracy of 0.005 g; a desiccator; and an ultrasonic bath.

REAGENTS

Carbon dioxide-free water: This is Purified Water that has been boiled vigorously for 5 min or more and allowed to cool while protected from absorption of carbon dioxide from the atmosphere, or Purified Water that has a resistivity of not less than 18 Mohm-cm.

Methyl red solution: Dissolve 50 mg of methyl red in 1.86 mL of 0.1 M sodium hydroxide and 50 mL of ethanol (96%), and dilute with Purified Water to 100 mL. To test for sensitivity, add 100 mL of carbon dioxide-free water and 0.05 mL of 0.02 M hydrochloric acid to 0.1 mL of the methyl red solution. The resulting solution should be red. NMT 0.1 mL of 0.02 M sodium hydroxide is required to change the color to yellow. A color change from red to yellow corresponds to a change in pH from pH 4.4 (red) to pH 6.0 (yellow).

Glass Grains Test

The *Glass Grains Test* may be performed either on the canes used for the manufacture of tubing glass containers or on the containers.

SAMPLE PREPARATION

Rinse the containers to be tested with Purified Water, and dry in the oven. Wrap at least three of the glass articles in clean paper, and crush to produce two samples of about 100 g each in pieces NMT 30 mm across. Place in the mortar 30–40 g of the pieces between 10 and 30 mm across taken from one of the samples, insert the pestle, and strike it heavily with the hammer once only. Alternatively, transfer samples into a ball mill-breaker, add the balls, and crush the glass. Transfer the contents of the mortar or ball mill to the coarsest sieve (No. 25) of the set. Repeat the operation until all fragments have been transferred to the sieve. Shake the set of sieves for a short time by hand, and remove the glass that remains on sieves No. 25 and No. 40. Submit these portions to further fracture, repeating the operation until about 10 g of glass remains on sieve No. 25. Reject this portion and the portion that passes through sieve No. 50. Reassemble the set of sieves, and shake for 5 min. Transfer to a weighing bottle the glass grains that passed through sieve No. 40 and are retained on sieve No. 50. Repeat the crushing and sieving procedure with the second glass sample until two samples of grains are obtained, each of which weighs more than 10 g.

Spread each sample on a piece of clean glazed paper, and remove any iron particles by passing the magnet over them. Transfer each sample into a beaker for cleaning. Add 30 mL of acetone to the grains in each beaker, and scour the grains,

using suitable means such as a rubber-tipped or plastic-coated glass rod. After scouring the grains, allow to settle, and decant as much acetone as possible. Add another 30 mL of acetone, swirl, decant, and add a new portion of acetone. Fill the bath of the ultrasonic vessel with water at room temperature, then place the beaker in the rack, and immerse it until the level of the acetone is at the level of the water; apply the ultrasound for 1 min. Swirl the beaker, allow to settle, and decant the acetone as completely as possible; then repeat the ultrasonic cleaning operation. If a fine turbidity persists, repeat the ultrasonic cleaning and acetone washing until the solution remains clear. Swirl, and decant the acetone. Dry the grains, first by putting the beaker on a warm plate, then by heating at 140° for 20 min in a drying oven. Transfer the dried grains from each beaker into separate weighing bottles, insert the stoppers, and cool in a desiccator.

METHOD

Filling and heating: Weigh 10.00 g of the cleaned and dried grains into two separate conical flasks. Pipet 50 mL of carbon dioxide-free Purified Water into each of the conical flasks (test solutions). Pipet 50 mL of carbon dioxide-free Purified Water into a third conical flask that will serve as a blank. Distribute the grains evenly over the flat bases of the flasks by shaking gently. Close the flasks with neutral glass dishes or aluminum foil rinsed with Purified Water or with inverted beakers so that the inner surfaces of the beakers fit snugly down onto the top rims of the flasks. Place all three flasks in the autoclave containing the water at ambient temperature, and ensure that they are held above the level of the water in the vessel. Carry out the following operations:

1. Insert the end of a calibrated thermometric device in a filled container through a hole of approximately the diameter of the thermocouple and connect it to an external measuring device. If the container is too small to insert a thermocouple, apply a thermocouple in a suitable, similar container. Alternatively, use the internal thermometer of the autoclave.
2. Close the autoclave door or lid securely but leave the vent-cock open.
3. Start automatic recording of the temperature versus time, and heat the autoclave at a regular rate such that steam issues vigorously from the vent-cock after 20–30 min, and maintain a vigorous evolution of steam for a further 10 min. For autoclaves using a steam generator, it is not necessary to maintain the temperature for 10 min at 100°.
4. Close the vent-cock, and raise the temperature from 100° to 121° at a rate of 1°/min within 20–22 min.
5. Maintain the temperature at $121 \pm 1°$ for 30 ± 1 min from the time when the holding temperature is reached.
6. Cool down to 100° at a rate of 0.5°/min, venting to prevent formation of a vacuum, within 40–44 min.
7. Do not open the autoclave until it has cooled to 95°.
8. Remove the hot samples from the autoclave using appropriate safety precautions, and cool the samples cautiously down to room temperature within 30 min, avoiding thermal shock.

Titration: To each of the three flasks add 0.05 mL of *Methyl red solution*. Titrate the blank solution immediately with 0.02 M hydrochloric acid, then titrate the test solutions until the color matches that obtained with the blank solution. Subtract the titration volume for the blank solution from that for the test solutions. Calculate the mean value of the results in mL of 0.02 M hydrochloric acid per g of the sample. Repeat the test if the highest and lowest observed values differ by more than the permissible range given in *Table 3*.

Table 3. Permissible Range for Values Obtained

Mean of the Values Obtained for the Consumption of Hydrochloric Acid Solution per g of Glass Grains (mL/g)	Permissible Range of the Values Obtained
NMT 0.10	25% of the mean
0.10–0.20	20% of the mean
NLT 0.20	10% of the mean

NOTE—Where necessary to obtain a sharp endpoint, decant the clear solution into a separate 250-mL flask. Rinse the grains by swirling with three 15-mL portions of carbon dioxide-free water, and add the washings to the main solution. Add 0.05 mL of the *Methyl red solution*. Titrate, and calculate as before. In this case also add 45 mL of carbon dioxide-free Purified Water and 0.05 mL of *Methyl red solution* to the blank solution.

LIMITS

The volume does not exceed the values indicated in *Table 4*.

Table 4. Test Limits for Glass Grains Test

Filling Volume (mL)	Maximum Volume of 0.02 M HCl per g of Test Glass (mL)	
	Type I	Types II and III
All	0.1	0.85

General Chapters

Surface Glass Test

DETERMINATION OF THE FILLING VOLUME

The filling volume is the volume of Purified Water to be added to the container for the purpose of the test. For vials, bottles, cartridges, and syringes, the filling volume is 90% of the brimful capacity. For ampuls, it is the volume up to the height of the shoulder.

Vials and bottles: Select six dry vials or bottles from the sample lot, or three if their capacity exceeds 100 mL, and remove any dirt or debris. Weigh the empty containers with an accuracy of 0.1 g. Place the containers on a horizontal surface, and fill them with Purified Water to about the rim edge, avoiding overflow and the introduction of air bubbles. Adjust the liquid levels to the brimful line. Weigh the filled containers to obtain the mass of the water expressed to two decimal places, for containers having a nominal volume less than or equal to 30 mL, and expressed to one decimal place, for containers having a nominal volume greater than 30 mL. Calculate the mean value of the brimful capacity in mL, and multiply it by 0.9. This volume, expressed to one decimal place, is the filling volume for the particular container lot.

Cartridges and syringes: Select six dry syringes or cartridges, and seal the small opening (mouth of cartridges; Luer cone or staked needle of syringes), using an inert material. Determine the mean brimful capacity and filling volume according to *Vials and Bottles.*

Ampuls: Place at least six dry ampuls on a flat, horizontal surface, and fill them with Purified Water from a buret until the water reaches point A, where the body of the ampul starts to decrease to the shoulder of the ampul (see *Figure 2*). Read the capacities, expressed to two decimal places, and calculate the mean value. This volume, expressed to one decimal place, is the filling volume for the particular ampul lot. The filling volume may also be determined by weighing.

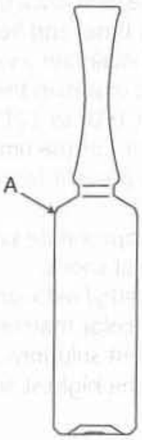

Figure 2. Filling volumes of ampuls up to point A.

TEST

The determination is carried out on unused containers. The volumes of the test solution necessary for the final determination are shown in *Table 5*.

Table 5. Volume of Test Solution and Number of Titrations

Filling Volume (mL)	Volume of Test Liquid for One Titration (mL)	Number of Titrations
NMT 3	25.0	1
3–30	50.0	2
30–100	100.0	2
NLT 100	100.0	3

METHOD

Cleaning: Remove any debris or dust. Shortly before the test, rinse each container carefully at least twice with Purified Water, refilled, and allow to stand. Immediately before testing, empty the containers; rinse once with Purified Water, then with carbon dioxide-free water; and allow to drain. Complete the cleaning procedure from the first rinsing within 20–30 min. Closed ampules may be warmed in a water bath or in an air oven at about 40° for approximately 2 min before opening to avoid container pressure when opening. Do not rinse before testing.

Filling and heating: The containers are filled with carbon dioxide-free water up to the filling volume. Containers in the form of cartridges or prefillable syringes are closed in a suitable manner with material that does not interfere with the test. Each container, including ampuls, shall be loosely capped with an inert material such as a dish of neutral glass or aluminum foil previously rinsed with Purified Water. Place the containers on the tray of the autoclave. Place the tray in an autoclave containing a quantity of water such that the tray remains clear of the water. Close the autoclave, and carry out autoclaving procedure steps 1–8 as described in the *Glass Grains Test*, except that the temperature is maintained at 121 ± 1° for 60 ± 1 min. If a water bath is used for cooling samples, take care that the water does not make contact with the loose foil caps to avoid contamination of the extraction solution. The extraction solutions are analyzed by titration according to the method described below.
Titration: Carry out the titration within 1 h of the removal of the containers from the autoclave. Combine the liquids obtained from the containers, and mix. Introduce the prescribed volume (see *Table 5*) into a conical flask. Transfer the same volume of carbon dioxide-free water, to be used as a blank, into a second similar flask. Add to each flask 0.05 mL of *Methyl red solution* for each 25 mL of liquid. Titrate the blank with 0.01 M hydrochloric acid. Titrate the test solution with the same acid until the color of the resulting solution is the same as that obtained for the blank. Subtract the value found for the blank titration from that found for the test solution, and express the results in mL of 0.01 M hydrochloric acid per 100 mL of test solution. Express titration values of less than 1.0 mL to two decimal places; express titration values of greater than or equal to 1.0 mL to one decimal place.

LIMITS

The results, or the average of the results if more than one titration is performed, are not greater than the values stated in *Table 6*.

Table 6. Limit Values for the Surface Glass Test

Filling Volume (mL)	Maximum Volume of 0.01 M HCl per 100 mL of Test Solution (mL)	
	Types I and II	Type III
NMT 1	2.0	20.0
1–2	1.8	17.6
2–3	1.6	16.1
3–5	1.3	13.2
5–10	1.0	10.2
10–20	0.80	8.1
20–50	0.60	6.1
50–100	0.50	4.8
100–200	0.40	3.8
200–500	0.30	2.9
NLT–500	0.20	2.2

Surface Etching Test

The *Surface Etching Test* is used in addition to the *Surface Glass Test* when it is necessary to determine whether a container has been surface treated and/or to distinguish between Type I and Type II glass containers. Alternatively, the *Glass Grains Test* and *Surface Glass Test* may be used. The *Surface Etching Test* may be carried out either on unused samples or on samples used in the *Surface Glass Test*.

METHOD

Vials and bottles: The volumes of test solution required are shown in *Table 5*. Rinse the containers twice with Purified Water, fill to the brimful point with a mixture of one volume of hydrofluoric acid and nine volumes of hydrochloric acid, and allow to stand for 10 min. Empty the containers, and rinse carefully five times with Purified Water. Immediately before the test, rinse once again with Purified Water. Submit these containers to the same autoclaving and determination procedure as described in the *Surface Glass Test*. If the results are considerably higher than those obtained from the original surfaces (by a factor of about 5–10), the samples have been surface treated. [*Caution*—Hydrofluoric acid is extremely aggressive. Even small quantities can cause life threatening injuries.]
Ampuls, cartridges, and syringes: Apply the test method as described in *Vials and Bottles*. If the ampuls, cartridges, and syringes are not surface treated, the values obtained are slightly lower than those obtained in the previous tests. [Note—Ampuls, cartridges, and syringes made from Type I glass tubing are not normally subjected to internal surface treatment.]

DISTINCTION BETWEEN TYPE I AND TYPE II GLASS CONTAINERS

The results obtained from the *Surface Etching Test* are compared to those obtained from the *Surface Glass Test*. For Type I glass containers, the values obtained are close to those found in the *Surface Glass Test*. For Type II glass containers, the values obtained greatly exceed those found in the *Surface Glass Test*; and they are similar to, but not greater than, those obtained for Type III glass containers of the same filling volume.

IMPURITIES

Arsenic ⟨211⟩

Use as the *Test Preparation* 35 mL of the water from one Type I or Type II glass container, or, in the case of smaller containers, 35 mL of the combined contents of several Type I or Type II glass containers, prepared as directed in the *Surface Glass Test*. The limit does not exceed 0.1 µg/g.

FUNCTIONALITY

Spectral Transmission for Colored Glass Containers

APPARATUS

A UV-Vis spectrophotometer, equipped with either a photodiode detector or a photomultiplier tube coupled with an integrating sphere

SAMPLE PREPARATION

Break the glass container or cut it with a circular saw fitted with a wet abrasive wheel, such as a carborundum or a bonded diamond wheel. Select sections representative of the wall thickness, and trim them as suitable for mounting in a spectrophotometer. After cutting, wash and dry each specimen, taking care to avoid scratching the surfaces. If the specimen is too small to cover the opening in the specimen holder, mask the uncovered portion of the opening with opaque paper or tape, provided that the length of the specimen is greater than that of the slit. Before placing in the holder, wash, dry, and wipe the specimen with lens tissue. Mount the specimen with the aid of wax, or by other convenient means, taking care to avoid leaving fingerprints or other marks.

METHOD

Place the specimen in the spectrophotometer with its cylindrical axis parallel to the slit and in such a way that the light beam is perpendicular to the surface of the section and the losses due to reflection are at a minimum. Measure the transmission of the specimen with reference to air in the spectral region of 290–450 nm, continuously or at intervals of 20 nm.

LIMITS

The observed spectral transmission for colored glass containers for products for nonparenteral use does not exceed 10% at any wavelength in the range of 290–450 nm, irrespective of the type and capacity of the glass container. The observed spectral transmission in colored glass containers for parenteral products does not exceed the limits given in *Table 7*.

Table 7. Limits of Spectral Transmission for Colored Glass Containers for Parenteral Products

Nominal Volume (mL)	Maximum Percentage of Spectral Transmission at Any Wavelength between 290 nm and 450 nm	
	Flame-Sealed Containers	Containers with Closures
NMT 1	50	25
1–2	45	20
2–5	40	15
5–10	35	13
10–20	30	12
NLT 20	25	10

⟨661⟩ PLASTIC PACKAGING SYSTEMS AND THEIR MATERIALS OF CONSTRUCTION

INTRODUCTION

Systems are used to package therapeutic products (pharmaceuticals, biologics, dietary supplements and devices). Such systems and their associated materials and components of construction are considered and defined in *Packaging and Storage Requirements* ⟨659⟩. Such systems may be constructed from plastic materials and components. The plastics used in packaging systems are composed of homologous polymers with a range of molecular weights and contain additives such as antioxidants, stabilizers, lubricants, plasticizers, colorants, and others. The nature and amount of additives in the plastics used for packaging systems are dictated by the type of polymer, the polymer's use, and the process used to convert the polymer into components, containers, or packaging systems.

Therapeutic products come into direct contact with packaging systems and their plastic materials of construction as the product is manufactured, stored, and administered. Such contact may result in an interaction between the therapeutic products and the packaging systems and its materials or components of construction. These interactions must be such that the suitability for use (including its safety and efficacy) of the therapeutic product and the packaging systems is not adversely affected by the interaction. Although suitability for use includes several quality aspects of the packaged drug product and its performance, the suitability for use aspect addressed in this chapter is patient safety. Obtaining such a necessary and desirable outcome is facilitated by the use of well-characterized plastic materials of construction in components, containers, and packaging systems and by the appropriate testing of packaging systems.

SCOPE

Establishing the suitability of plastic packaging systems for therapeutic products involves multiple tests and testing procedures, as briefly outlined below:

- Material screening: Characterization of a packaging system's materials of construction to evaluate ingredients as probable extractables and potential leachables. Such a characterization facilitates the identification of materials that are suitable for use in packaging systems.
- Controlled extraction (simulation) study: Worst-case controlled extraction (simulation) study to determine the extent to which extractables may become probable leachables (for additional information, see *Assessment of Extractables Associated with Pharmaceutical Packaging/Delivery Systems* ⟨1663⟩).
- Product assessment: Actual-case measurement of confirmed leachables in the therapeutic product in the pharmaceutical packaging/delivery system intended for the commercial market (for additional information, see *Assessment of Drug Product Leachables Associated with Pharmaceutical Packaging/Delivery Systems* ⟨1664⟩).

Additionally, information provided by the vendor(s) of plastic packaging systems and their associated materials or components of construction can facilitate suitability assessments, as such information may be appropriate additions to or surrogates for the results obtained by performing the tests noted previously.

The process of manufacturing a packaged therapeutic product is complex. Considering the packaging system specifically, packaging systems typically consist of components that are individually manufactured from plastic materials of construction. These individual plastic materials of construction are initially generated from reagents that are reacted to produce a base polymer, which is then compounded with various additives to produce a base resin. Individual base resins either are materials of construction themselves or may be combined with additional additives and processing aids to form a plastic material of construction. Testing of these plastic materials of construction to establish that they are well characterized and suitable for use, specifically considering safety, in packaging systems is within the scope of this series of chapters and is addressed in *Plastic Materials of Construction* ⟨661.1⟩.

Individual plastic materials of construction are combined to form components of the packaging system. The packaging system is completed by assembling its various components into its final form. Testing of packaging systems to establish that they are suited for their intended uses, specifically considering safety, is within the scope of this series of chapters and is addressed in *Plastic Packaging Systems for Pharmaceutical Use* ⟨661.2⟩.

Assembled packaging systems are filled to contain the therapeutic product by various means and at various points in the packaging system manufacturing process, thereby generating the packaged therapeutic product. Testing of packaged therapeutic products to establish that they are suited for their intended uses is addressed in compendial monographs relevant to the specific therapeutic product and falls outside of the scope of this series of chapters.

For more information on the scope of, applicability of, and other topics related to the ⟨661⟩ suite of general chapters, see *Evaluation of Plastic Packaging Systems and Their Materials of Construction with Respect to Their User Safety Impact* ⟨1661⟩.

General Chapters

⟨661.1⟩ PLASTIC MATERIALS OF CONSTRUCTION

INTRODUCTION

The use of well-characterized materials to construct packaging systems is a primary means of ensuring that the packaging system is suited for its intended use. Materials are characterized so that their properties and characteristics can be matched to the performance requirements of the packaging system, thus facilitating the intentional selection of appropriate materials. For the purposes of this chapter, a plastic material of construction is deemed to be well-characterized for its intended use if the following characteristics have been adequately established: its identity, biocompatibility (biological reactivity), general physicochemical properties, and composition (i.e., additives and extractable metals likely to be present).

Establishing the potential safety effect of a material of construction cannot rely on a single testing strategy, because a single testing strategy cannot cover all of the material's attributes that have a potential safety impact. The chemical testing prescribed in the chapter is orthogonal in that the *Physicochemical Tests* sections provide a general overview of extracted substances, the *Extractable Metals* sections address potential sources of elemental impurities; and the information provided by the *Plastic Additives* tests addresses potential organic extractables. Because chemical testing alone may not be adequate to establish a material's suitability for use, chemical testing is augmented by the orthogonal approach of establishing biological reactivity.

SCOPE

The purpose of this chapter is to provide test methods and specifications for plastic materials of construction used in packaging systems. This chapter solely applies to individual plastic materials and should not be applied to packaging systems or components consisting of multiple individual plastic materials. The testing and qualification of plastic packaging systems and components for pharmaceutical use are covered in *Plastic Packaging Systems for Pharmaceutical Use* ⟨661.2⟩.

This chapter contains tests, methods, and specifications for the following materials: cyclic olefins, polyethylene, polypropylene, polyethylene terephthalate, polyethylene terephthalate G, and plasticized polyvinyl chloride. Other plastic materials of construction can be used in packaging systems if their suitability for use has been established by testing that is consistent with the general procedures and specifications provided in this chapter for the above-mentioned materials. Alternatively, individual plastic materials of construction are deemed to be well characterized and appropriate for use if they are used in a packaging system that meets the requirements in ⟨661.2⟩ or if the packaging system has been deemed appropriate for pharmaceutical use by the appropriate regulatory authority. Such a conclusion is only valid for the specific packaging system that meets the requirements of ⟨661.2⟩ and cannot be extended to other packaging systems using the same material (or materials) of construction. If the same material of construction is used in another packaging system, then its suitability for use in that packaging system must be established.

Given the wide variety of materials and packaging systems available, and the potential for new developments in materials and packaging systems, it is possible that plastic packaging systems could be constructed from materials that are not specifically addressed in this chapter. Materials of construction that are not specifically addressed in this chapter are termed "unaddressed materials". For an unaddressed material to be deemed compliant with this chapter, it must be characterized in ways that are comparable to those used for the materials specified in this chapter. Specifically, the unaddressed material of construction must be identified by appropriate methodology and tested for biocompatibility, physicochemical properties, additives, and relevant extracted metals.

Specifications must be established for unaddressed materials, and such specifications should be consistent with the specifications for materials addressed in this chapter. For example, unaddressed materials whose aqueous extracts are tested for their total organic carbon (TOC) levels shall have specifications for TOC that are consistent with the TOC specifications for materials addressed in this chapter. Alternatively, unaddressed materials may, in justified circumstances, comply with other specifications, subject to approval by an appropriate regulatory authority.

The test methods in this chapter are appropriate for their purpose, as evidenced by their longstanding use, and thus they reflect acceptable practices. However, other methods and procedures may be equally suitable. Therefore, alternative test methods and procedures can be used but must be suitable, validated, and equivalent to or better than the compendial methods.

Table 1 provides guidance on the appropriate application of the chemical tests and biological reactivity tests for oral and topical dosage forms, which include oral tablets, oral hard and soft gelatin capsules, oral powders, solutions and suspensions, topical powders, and aqueous-based topical solutions and suspensions. *Table 2* provides guidance on the appropriate application of the chemical tests and biological reactivity tests for all other dosage forms. [NOTE—For aqueous-based oral drug products that contain cosolvents (or if, for any reason, it may be expected to extract greater amounts of substances from plastic packaging components than water), additional extractable information may be needed to address safety issues. If additional information is required, perform *Extractable Metals* and *Plastic Additives* tests as directed in *Table 2*.]

Table 1. Guidelines for Application of Tests for Oral and Topical Dosage Forms

Biological Reactivity Tests	Chemical Tests
• Perform *Biological Reactivity Tests, In Vitro* ⟨87⟩ • Materials that meet the requirements of this test are not required to undergo testing as described in *Biological Reactivity Tests, In Vivo* ⟨88⟩ • Materials that do not meet the requirements of the in vitro test are not suitable for these dosage forms	• Perform *Identification, Physicochemical,* and *Extractable Metals* tests • Provide appropriate reference to the Indirect Food Additive regulations in 21 CFR 174–186, specifically those addressing the purity criteria and limitations pertaining to use • Materials that do not meet these requirements are not suitable for packaging for these dosage forms unless the materials are established to be suitable by other means that have been approved by an appropriate regulatory authority

Table 2. Guidelines for Application of Tests for All Other Dosage Forms

Biological Reactivity Tests	Chemical Tests
• Perform *Biological Reactivity Tests, In Vitro* ⟨87⟩ • Perform *Biological Reactivity Tests, In Vivo* ⟨88⟩ to obtain the appropriate *Classification of Plastics* • Materials that do not meet the requirements of the in vivo or the in vitro tests are not suitable for containers for these dosage forms	• Perform *Identification, Physicochemical, Extractable Metals,* and *Plastic Additives* tests • Materials that do not meet these requirements are not suitable for containers for these dosage forms unless the materials are established to be suitable by other means that have been approved by an appropriate regulatory authority

Change to read:

SPECIFICATIONS

Polyethylene

IDENTIFICATION

Low-density polyethylene

Infrared spectrophotometry—Determine the infrared spectrum from 3800 cm^{-1} to 650 cm^{-1} (2.6–15 µm). The specimen exhibits an absorption spectrum that is substantially equivalent to that of the USP Low-Density Polyethylene RS. Substantial, as opposed to exact, equivalence allows for minor spectral differences arising from the natural compositional and/or physical variation among polymers of this class. Substantial equivalence is achieved when all differences between the sample and Reference Standard spectra can be explained in the context of such natural compositional and/or physical variations.

Differential scanning calorimetry—The thermogram of the specimen is similar to the thermogram of USP Low-Density Polyethylene RS, and the transition temperature (T_g) obtained from the thermogram of the specimen does not differ from that of the Reference Standard by more than 8.0°.

High-density polyethylene

Infrared spectrophotometry—Determine the infrared spectrum from 3800 cm^{-1} to 650 cm^{-1} (2.6–15 µm). The specimen exhibits an absorption spectrum that is substantially equivalent to that of USP High-Density Polyethylene RS. Substantial, as opposed to exact, equivalence allows for minor spectral differences arising from the natural compositional and/or physical variation among polymers of this class. Substantial equivalence is achieved when all differences between the sample and Reference Standard spectra can be explained in the context of such natural compositional and/or physical variations.

Differential scanning calorimetry—The thermogram of the specimen is similar to the thermogram of USP High-Density Polyethylene RS, and the transition temperature (T_g) obtained from the thermogram of the specimen does not differ from that of the Reference Standard by more than 6.0°.

PHYSICOCHEMICAL TESTS

Absorbance: Maximum absorbance is 0.2.

Acidity or alkalinity: NMT 1.5 mL of 0.01 N sodium hydroxide is required to change the color of the indicator to blue. NMT 1.0 mL of 0.01 N hydrochloric acid is required to reach the beginning of the color change of the indicator from yellow to orange.

Total organic carbon: The difference between the sample and blank TOC concentrations is NMT 5 mg/L.

EXTRACTABLE METALS

Aluminum: *Solution S3* (see *Table 3*) contains NMT 0.4 mg/L (ppm), corresponding to 1 µg/g.

Arsenic, cadmium, lead, mercury, cobalt, and nickel: Report the measured value in *Solution S3* at values above 0.01 mg/L (ppm), corresponding to 0.025 µg/g. If the measured values are below these values, report the result as less than 0.01 mg/L (ppm), corresponding to less than 0.025 µg/g.

Chromium: *Solution S3* contains NMT 0.02 mg/L (ppm), corresponding to 0.05 µg/g.

Titanium: *Solution S3* contains NMT 0.4 mg/L (ppm), corresponding to 1 µg/g.

Vanadium: *Solution S3* contains NMT 0.04 mg/L (ppm), corresponding to 0.1 µg/g.
Zinc: *Solution S3* contains NMT 0.4 mg/L (ppm), corresponding to 1 µg/g.
Zirconium: *Solution S3* contains NMT 0.04 mg/L (ppm), corresponding to ●0.1 µg/g.● (ERR 1-Apr-2016)
Test results for additional relevant extractable metals are similarly reported.

PLASTIC ADDITIVES, PHENOLIC ANTIOXIDANTS, NONPHENOLIC ANTIOXIDANTS, COPOLYMER OF DIMETHYL SUCCINATE AND (4-HYDROXY-2,2,6,6-TETRAMETHYLPIPERIDIN-1-YL)ETHANOL, AMIDES, AND STEARATES

The test results from these analyses are reported.

Cyclic Olefins

IDENTIFICATION

Infrared spectrophotometry: Determine the infrared spectrum from 3800 cm^{-1} to 650 cm^{-1} (2.6–15 µm). The specimen exhibits an absorption spectrum that is substantially equivalent to that of USP Cyclic Olefin Polymer RS or USP Cyclic Olefin Copolymer RS. Substantial, as opposed to exact, equivalence allows for minor spectral differences arising from the natural compositional and/or physical variation among polymers of this class. Substantial equivalence is achieved when all differences between the sample and Reference Standard spectra can be explained in the context of such natural compositional and/or physical variations.
Differential scanning calorimetry: Given the amorphous nature of these polymers and their compositional variety, material-to-material variations in the transition temperature (T_g) can be anticipated. Thus, it is neither recommended nor required that differential scanning calorimetry be performed.

PHYSICOCHEMICAL TESTS

Absorbance: Maximum absorbance is 0.2.
Acidity or alkalinity: NMT 1.5 mL of 0.01 N sodium hydroxide is required to change the color of the indicator to blue. NMT 1.0 mL of 0.01 N hydrochloric acid is required to reach the beginning of the color change of the indicator from yellow to orange.
Total organic carbon: The difference between the sample and blank TOC concentrations is NMT 5 mg/L.

EXTRACTABLE METALS

Aluminum: *Solution S3* (see *Table 3*) contains NMT 0.4 mg/L (ppm), corresponding to 1 µg/g.
Arsenic, cadmium, lead, mercury, cobalt, nickel, and vanadium: Report the measured value in *Solution S3* at values above 0.01 mg/L (ppm), corresponding to 0.025 µg/g. If the measured values are below these values, report the result as less than 0.01 mg/L (ppm), corresponding to less than 0.025 µg/g.
Titanium: *Solution S3* contains NMT 0.4 mg/L (ppm), corresponding to 1 µg/g.
Zinc: *Solution S3* contains NMT 0.4 mg/L (ppm), corresponding to 1 µg/g.
Test results for additional relevant extractable metals are similarly reported.

PLASTIC ADDITIVES, PHENOLIC ANTIOXIDANTS, NONPHENOLIC ANTIOXIDANTS, COPOLYMER OF DIMETHYL SUCCINATE AND (4-HYDROXY-2,2,6,6-TETRAMETHYLPIPERIDIN-1-YL)ETHANOL, AMIDES, AND STEARATES

The test results from these analyses are reported.

Polypropylene

IDENTIFICATION

Infrared spectrophotometry: Determine the infrared spectrum from 3800 cm^{-1} to 650 cm^{-1} (2.6–15 µm). The specimen exhibits an absorption spectrum that is substantially equivalent to that of the USP Homopolymer Polypropylene RS. Substantial, as opposed to exact, equivalence allows for minor spectral differences arising from the natural compositional and/or physical variation among polymers of this class. Substantial equivalence is achieved when all differences between the sample and Reference Standard spectra can be explained in the context of such natural compositional and/or physical variations.
Differential scanning calorimetry: The transition temperature (T_g) in the thermogram does not differ from that of the USP Homopolymer Polypropylene RS by more than 12.0°.

PHYSICOCHEMICAL TESTS

Absorbance: Maximum absorbance is 0.2.
Acidity or alkalinity: NMT 1.5 mL of 0.01 N sodium hydroxide is required to change the color of the indicator to blue. NMT 1.0 mL of 0.01 N hydrochloric acid is required to reach the beginning of the color change of the indicator from yellow to orange.
Total organic carbon: The difference between the sample and blank TOC concentrations is NMT 5 mg/L.

EXTRACTABLE METALS

Aluminum: *Solution S3* (see *Table 3*) contains NMT 0.4 mg/L (ppm), corresponding to 1 µg/g.
Arsenic, cadmium, lead, mercury, cobalt, nickel, and vanadium: Report the measured value in *Solution S3* at values above 0.01 mg/L (ppm), corresponding to 0.025 µg/g. If the measured values are below these values, report the result as less than 0.01 mg/L (ppm), corresponding to less than 0.025 µg/g.
Chromium: *Solution S3* contains NMT 0.02 mg/L (ppm), corresponding to 0.05 µg/g.
Titanium: *Solution S3* contains NMT 0.4 mg/L (ppm), corresponding to 1 µg/g.
Zinc: *Solution S3* contains NMT 0.4 mg/L (ppm), corresponding to 1 µg/g.
Test results for additional relevant extractable metals are similarly reported.

PLASTIC ADDITIVES, PHENOLIC ANTIOXIDANTS, NONPHENOLIC ANTIOXIDANTS, AMIDES, AND STEARATES

The test results from these analyses are reported.

Polyethylene Terephthalate and Polyethylene Terephthalate G

IDENTIFICATION

Infrared spectrophotometry: Determine the infrared spectrum from 3800 cm^{-1} to 650 cm^{-1} (2.6–15 µm). The specimen exhibits an absorption spectrum that is substantially equivalent to that of USP Polyethylene Terephthalate RS or USP Polyethylene Terephthalate G RS. Substantial, as opposed to exact, equivalence allows for minor spectral differences arising from the natural compositional and/or physical variation among polymers of this class. Substantial equivalence is achieved when all differences between the sample and Reference Standard spectra can be explained in the context of such natural compositional and/or physical variations.
Differential scanning calorimetry
Polyethylene terephthalate—The thermogram of the specimen is similar to the thermogram of USP Polyethylene Terephthalate RS. The glass transition temperature (T_g) obtained from the thermogram of the specimen does not differ from that of the Reference Standard by more than 4.0°.
Polyethylene terephthalate G—The thermogram of the specimen is similar to the thermogram of USP Polyethylene Terephthalate G RS. The glass transition temperature (T_g) obtained from the thermogram of the specimen does not differ from that of the Reference Standard by more than 6.0°.

PHYSICOCHEMICAL TESTS

Absorbance: Maximum absorbance is 0.2 for *Solution S1* and 0.05 for *Solution S5*. For colored polyethylene terephthalate, maximum absorbance between 400 and 800 nm is 0.05 for *Solution S1*.
Acidity or alkalinity: NMT 0.5 mL of 0.01 N sodium hydroxide is required to change the color of the indicator to blue. NMT 0.5 mL of 0.01 N hydrochloric acid is required to reach the beginning of the color change of the indicator from yellow to orange.
Total organic carbon: The difference between the sample and blank TOC concentrations is NMT 5 mg/L.

EXTRACTABLE METALS

Aluminum: *Solution S3* (see *Table 3*) contains NMT 0.4 mg/L (ppm), corresponding to 1 µg/g.
Antimony: *Solution S4* contains NMT 0.4 mg/L (ppm), corresponding to 1 µg/g.
Arsenic, cadmium, lead, mercury, cobalt, nickel, and vanadium: Report the measured value in *Solution S3* at values above 0.01 mg/L (ppm), corresponding to 0.025 µg/g. If the measured values are below these values, report the result as less than 0.01 mg/L (ppm), corresponding to less than 0.025 µg/g.
Barium: *Solution S3* contains NMT 0.4 mg/L (ppm), corresponding to 1 µg/g.
Germanium: *Solution S4* contains NMT 0.4 mg/L (ppm), corresponding to 1 µg/g.
Manganese: *Solution S3* contains NMT 0.4 mg/L (ppm), corresponding to 1 µg/g.

Titanium: *Solution S3* contains NMT 0.4 mg/L (ppm), corresponding to ●1 µg/g.● (ERR 1-Apr-2016)
Zinc: *Solution S3* contains NMT 0.4 mg/L (ppm), corresponding to 1 µg/g.
Test results for additional relevant extractable metals are similarly reported.

Plasticized Polyvinyl Chloride

IDENTIFICATION

Infrared spectrophotometry: Determine the infrared spectrum from 3800 cm^{-1} to 600 cm^{-1} (2.6–16 µm). The specimen exhibits an absorption spectrum that is substantially equivalent to that of the USP Plasticized Polyvinyl Chloride RS. Substantial, as opposed to exact, equivalence allows for minor spectral differences arising from the natural compositional and/or physical variation among polymers of this class. Substantial equivalence is achieved when all differences between the sample and Reference Standard spectra can be explained in the context of such natural compositional and/or physical variations.
Differential scanning calorimetry: The thermogram of the specimen is similar to the thermogram of USP Plasticized Polyvinyl Chloride RS, and the transition temperature (T_g) obtained from the thermogram of the specimen does not differ from that of the Reference Standard by more than 8.0°. Note that the results of the differential scanning calorimetry (DSC) analysis are strongly dependent on the amount of plasticizer in the test article.

PHYSICOCHEMICAL TESTS

Absorbance: NMT 0.25 for *Solution S1*
Acidity or alkalinity: NMT 1.5 mL of 0.01 N sodium hydroxide is required to change the color of the indicator to blue. NMT 1.0 mL of 0.01 N hydrochloric acid is required to reach the beginning of the color change of the indicator from yellow to orange.
Total organic carbon: The difference between the sample and blank TOC concentrations is NMT 5 mg/L.

EXTRACTABLE METALS

Arsenic, cadmium, lead, mercury, cobalt, nickel, and vanadium: Report the measured value in *Solution S3* at values above 0.01 mg/L (ppm), corresponding to 0.025 µg/g. If the measured values are below these values, report the result as less than 0.01 mg/L (ppm), corresponding to less than 0.025 µg/g.
Barium: *Solution S3* (see *Table 3*) contains NMT 0.25 mg/L (ppm), corresponding to 5 µg/g.
Calcium: *Solution S3* contains NMT 35 mg/L (ppm), corresponding to 0.07 weight %.
Tin: *Solution S3* contains NMT 1 mg/L (ppm), corresponding to 20 µg/g.
Zinc: *Solution S3* contains NMT 100 mg/L (ppm), corresponding to 0.2 weight %.
Test results for additional relevant extractable metals are similarly reported.

PLASTIC ADDITIVES

Di(2-ethylhexyl)phthalate: Residue is NMT 40 mg.
***N′N″*-Diacylethylenediamines:** Residue is NMT 20 mg.
Epoxidized soya oil: The difference between the masses of both residues is NMT 10 mg.
Epoxidized linseed oil: The difference between the masses of both residues is NMT 10 mg.
Vinyl chloride: NMT 1 ppm. Note that vinyl chloride is not an additive but is monitored as a residual monomer.

Change to read:

TEST METHODS

Identification

The identification testing described in this chapter is required for all materials of construction used in packaging systems. The identification test should be accomplished by using the procedures specified in this chapter (infrared spectrophotometry and thermal analysis). If these procedures are not applicable for a particular material, then an alternative procedure can be used. The alternate procedure must establish the identity on the basis of obtaining substantially equivalent results for the test article and its appropriate USP Reference Standard.

Specifications must be established for materials that are not specified in this chapter, and such specifications should be consistent with the specifications established for materials that are specified in this chapter. For example, a DSC specification for a material that is not currently listed in this chapter should be consistent, in language and in rigor, with a DSC specification for a

material that is listed in this chapter [e.g., transition temperature (T_g) index agreement between sample and reference material].

The identities of materials of construction only need to be established by one test procedure.

Infrared Spectrophotometry

Apparatus: Use an infrared spectrophotometer capable of correcting for the blank spectrum and able to measure in transmission mode or equipped with an internal reflectance accessory and an appropriate internal reflectance plate.

Sample preparation

Transmission mode—Prepare a specimen of appropriate thickness (polyethylene about 250 µm; polypropylene about 100 µm) without visible defects (cracks or holes). The specimens can be compressed to form a thin, uniform film by exposure to elevated temperatures and pressures (2000 psi or more). The temperatures at which the thin films are generated represent a trade-off between producing a melt (which dictates the lowest temperature necessary) and degrading the sample (which dictates the highest temperature allowed). Ultimately, the temperatures that are used are appropriate if the film produced is conducive to the IR analysis.

Internal reflectance mode—Prepare a flat section, and trim it as necessary to obtain a segment that is convenient for mounting in the internal reflectance accessory. Taking care to avoid scratching the surfaces, wipe the specimen with dry paper or, if necessary, a soft cloth dampened with methanol, and permit the surfaces to dry. Before mounting the specimen on the plate, compress it to form a thin, uniform film by exposure to elevated temperatures under high pressure (2000 psi or more). Then securely mount the specimen on the internal reflection plate, ensuring adequate surface contact.

Procedure: Place the mounted specimen sections in the sample compartment of the infrared spectrophotometer or the internal reflectance accessory, and place the assembly in the specimen beam of the infrared spectrophotometer. For internal reflectance, adjust the specimen position and mirrors within the accessory to permit maximum light transmission of the unattenuated reference beam. (For a double-beam instrument, attenuate the reference beam after completing the adjustment in the accessory to permit full-scale deflection during the scanning of the specimen.)

General Chapters

Thermal Analysis

Refer to *Thermal Analysis* ⟨891⟩.

Sample preparation: Place about 12 mg of sample in the test specimen pan. [NOTE—Intimate contact between the pan and the thermocouple is essential for obtaining reproducible results.] Determine the thermogram under nitrogen, using heating/cooling conditions specified for the polymer type and using equipment capable of performing the determinations as described in ⟨891⟩. Thermograms are obtained for the test materials and their associated USP Reference Standards.

Procedure

Polyethylene—Determine the thermogram under nitrogen at temperatures between 40° and 200° at a heating range between 2° and 10°/min, followed by cooling, at a rate between 2° and 10°/min, to 40°.

Polyethylene terephthalate—Heat the specimen from room temperature to 280° at a heating rate of about 20°/min. Hold the specimen at 280° for 1 min. Quickly cool the specimen to room temperature, and reheat it to 280° at a heating rate of 5°/min.

Polyethylene terephthalate G—Heat the specimen from room temperature to 120° at a heating rate of about 20°/min. Hold the specimen at 120° for 1 min. Quickly cool the specimen to room temperature, and reheat it to 120° at a heating rate of 10°/min.

Cyclic olefin—Determine the thermogram under nitrogen at temperatures ranging from ambient to 30° above the melting point. Maintain the temperature for 10 min, then cool to 50° below the peak crystallization temperature at a rate of 10° to 20°/min.

Polypropylene—Determine the thermogram under nitrogen at temperatures ranging from ambient to 30° above the melting point. Maintain the temperature for 10 min, then cool to 50° below the peak crystallization temperature at a rate of 10° to 20°/min.

Plasticized polyvinyl chloride—Heat the specimen from −20° to 120° at a heating rate of about 10°/min. Quickly cool the specimen to room temperature.

Other materials—Specimens shall be heated and cooled in a manner that is appropriate for the test material and that facilitates the generation of a useable thermogram.

Extractions

Physicochemical testing of the plastic material requires that it be extracted or dissolved. Different tests are facilitated by various extraction methods. *Table 3* describes the extracts that are generated and the tests that are performed on those extracts. Subsequent discussions address methods for producing the extracts. Note that these extracts may be used for tests other than the physicochemical tests.

Table 3. Extractions Performed for Various Chemical Tests

		Tests Performed on Plastic Using the Specified Extracting Solution		
Extraction	**Extracting Solution**	**Polyethylene, Cyclic Olefin, and Polypropylene**	**Polyethylene Terephthalate and Polyethylene Terephthalate G**	**Plasticized Polyvinyl Chloride**
S1	Water	Absorbance Acidity/alkalinity Total organic carbon	Absorbance Acidity/alkalinity Total organic carbon	Absorbance[a] Acidity/alkalinity Total organic carbon
S2	Toluene	Phenolic antioxidants, non-phenolic antioxidants, amides, and stearates[a]	N/A	N/A
S3	Acid	Extractable metals: Al, As, Cd, Co, Cr,[b] Hg, Ni, Pb, Ti, V, Zn, and Zr[c]	Extractable metals: Al, ●● (ERR 1-Apr-2016) As, Ba, Cd, Co, ●● (ERR 1-Apr-2016) Hg, Mn, Ni, Pb, Ti, V, and Zn	Extractable metals: As, Ba, Ca, Cd, Co, Hg, Ni, Pb, Sn, V, and Zn
S4	Alkali	N/A	Extractable metals: Sb and Ge	N/A
S5	Alcohol	N/A	Absorbance	N/A

[a] Although this extract is suitable for use with these specific ingredient methods, such an extract could be useful for other tests designed to establish a material's composition.
[b] For ●● (ERR 1-Apr-2016) polyethylene only.
[c] Not applicable for cyclic olefins.

WATER EXTRACTION, *SOLUTION S1*

Polyethylene, cyclic olefins, and polypropylene: Place 25 g of the test material in a borosilicate glass flask with a ground-glass neck. Add 500 mL of Purified Water, and boil under reflux conditions for 5 h. Allow to cool, and filter the extracting solution through a sintered-glass filter. Collect the filtrate in a 500-mL volumetric flask and dilute with Purified Water to volume; the diluted solution is designated *Solution S1*. Use *Solution S1* within 4 h of preparation.

Polyethylene terephthalate and polyethylene terephthalate G: Place 10 g of the test material in a borosilicate glass flask with a ground-glass neck. Add 200 mL of Purified Water, and heat at 50° for 5 h. Allow to cool, decant the solution into a 200-mL volumetric flask, and dilute with Purified Water to volume; the diluted sample is designated *Solution S1*. Use *Solution S1* within 4 h of preparation.

Plasticized polyvinyl chloride—Place 25 g of the test material into a borosilicate glass flask. Add 500 mL of Purified Water, cover the flask's neck with aluminum foil or a borosilicate beaker, and heat in an autoclave at 121 ± 2° for 20 min. Allow the solution to cool and the solids to settle, decant the solution into a 500-mL volumetric flask, and dilute with Purified Water to volume; the diluted solution is designated *Solution S1*.

TOLUENE EXTRACTION, *SOLUTION S2*

Polyethylene, cyclic olefins, and polypropylene: Place 2.0 g of the test material in a 250-mL borosilicate glass flask with a ground-glass neck. Add 80 mL of toluene and boil under a reflux condenser for 1.5 h, stirring constantly. Allow to cool to 60° and add, with continued stirring, 120 mL of methanol. Pass the resulting solution through a sintered-glass filter. Rinse the flask and the filter with 25 mL of a mixture of 40 mL of toluene and 60 mL of methanol, add the rinsings to the filtrate, and dilute to 250 mL with the same mixture of solvents to produce *Solution S2*. Prepare a blank solution.

ACID EXTRACTION, *SOLUTION S3*

Polyethylene, cyclic olefins, and polypropylene: Place 100 g of the test material in a borosilicate glass flask with a ground-glass neck. Add 250 mL of 0.1 N hydrochloric acid and boil under a reflux condenser for 1 h with constant stirring. Allow to cool, decant the solution into a 250-mL volumetric flask, and dilute with 0.1 N hydrochloric acid to volume; the diluted solution is designated *Solution S3*.

Polyethylene terephthalate and polyethylene terephthalate G: Place 20 g of the test material in a borosilicate glass flask with a ground-glass neck. Add 50 mL of 0.1 N hydrochloric acid, and heat at 50° for 5 h. Allow to cool, decant the solution into a 50-mL volumetric flask, and dilute with 0.1 N hydrochloric acid to volume; the diluted solution is designated *Solution S3*. Use *Solution S3* within 4 h of preparation.

Plasticized polyvinyl chloride: Place 5 g in a borosilicate glass flask with a ground-glass neck. Add 100 mL of 0.1 N hydrochloric acid, and boil under a reflux condenser for 1 h with constant stirring. Allow to cool and the solids to settle, decant the solution into a 100-mL volumetric flask, and dilute with 0.1 N hydrochloric acid to volume; the diluted solution is designated *Solution S3*.

ALKALI EXTRACTION, *SOLUTION S4*

Polyethylene terephthalate and polyethylene terephthalate G: Place 20 g of test material in a borosilicate glass flask with a ground-glass neck. Add 50 mL of 0.01 N sodium hydroxide, and heat at 50° for 5 h. Allow to cool and the solids to settle, decant the solution into a 50-mL volumetric flask, and dilute with 0.01 N sodium hydroxide to volume; the diluted solution is designated *Solution S4*. Use *Solution S4* within 4 h of preparation.

ALCOHOL EXTRACTION, *SOLUTION S5*

Polyethylene terephthalate and polyethylene terephthalate G: Place 10 g of the test material in a borosilicate glass flask with a ground-glass neck. Add 100 mL of alcohol, absolute, and heat at 50° for 5 h. Allow to cool and the solids to settle, then decant the solution, producing *Solution S5*. Use *Solution S5* within 4 h of preparation.

Physicochemical Tests

ABSORBANCE

Refer to *Ultraviolet-Visible Spectroscopy* ⟨857⟩.

Polyethylene, cyclic olefins, and polypropylene: Determine the spectrum between 220 and 340 nm in *Solution S1*.

Polyethylene terephthalate and polyethylene terephthalate G: Determine the spectrum between 220 and 340 nm in *Solution S1*. For colored polyethylene terephthalate, determine the spectrum between 400 and 800 nm in *Solution S1*. For colored and noncolored polyethylene terephthalate, determine the spectrum between 400 and 800 nm in *Solution S5*.

Plasticized polyvinyl chloride: Evaporate 100 mL of *Solution S1* to dryness. Dissolve the resulting residue in 5 mL of hexane to produce the hexane sample. Pass the hexane sample, if necessary, through a filter previously rinsed with hexane. Determine the spectrum between 250 and 310 nm in the hexane sample. ●● (ERR 1-Apr-2016)

ACIDITY OR ALKALINITY

BRP indicator solution: 1.0 mg/mL of bromophenol blue, 0.2 mg/mL of methyl red, and 0.2 mg/mL of phenolphthalein in alcohol. Filter the resulting solution.

Methyl orange solution: Dissolve 100 mg of methyl orange in 80 mL of Purified Water, and dilute with alcohol R to 100 mL. Test for sensitivity: Add 0.1 mL of *Methyl orange solution* to 100 mL of carbon dioxide-free Purified Water. NMT 0.1 mL of 1 N hydrochloric acid is required to change the color from yellow to red.

Polyethylene, cyclic olefins, and polypropylene: To 100 mL of *Solution S1* add 0.15 mL of *BRP indicator solution.* Determine the titration volume of 0.01 N sodium hydroxide required to change the color of the indicator to blue. To a separate, 100-mL portion of *Solution S1* add 0.2 mL of *Methyl orange solution.* Determine the titration volume of 0.01 N hydrochloric acid required to reach the beginning of the color change of the indicator from yellow to orange.

Polyethylene terephthalate and polyethylene terephthalate G: To 50 mL of *Solution S1* add 0.15 mL of *BRP indicator solution.* Determine the titration volume of 0.01 N sodium hydroxide required to change the color of the indicator to blue. To a separate 50 mL of *Solution S1* add 0.2 mL of *Methyl orange solution.* Determine the titration volume of 0.01 N hydrochloric acid required to reach the beginning of the color change of the indicator from yellow to orange.

Plasticized polyvinyl chloride: To 100 mL of *Solution S1* add 0.15 mL of *BRP indicator solution.* Determine the titration volume of 0.01 N sodium hydroxide required to change the color of the indicator to blue. To 100 mL of *Solution S1* add 0.2 mL of *Methyl orange solution.* Determine the titration volume of 0.01 N hydrochloric acid required to reach the beginning of the color change of the indicator from yellow to orange.

TOTAL ORGANIC CARBON

The TOC content of *Solution S1* is measured according to the general methodologies outlined in *Total Organic Carbon* ⟨643⟩. However, although ⟨643⟩ is designed for the testing of high-purity water with low TOC values, material extracts may have TOC values that are higher than those of purified water because of extracted organic substances. Thus, the method used to perform the TOC analyses should have a limit of detection of 0.2 mg/L (ppm) and should have a demonstrated linear dynamic range from 0.2 to 20 mg/L (which encompasses the TOC limit). A linear range with a higher upper concentration can be used if linearity is established. If sample extracts exceed this upper linear range, they must be diluted appropriately for analysis.

Extractable Metals

The *Extractable Metals* testing described in this chapter is required for all plastic materials of construction used in packaging systems, regardless of whether the material is specified in this chapter. Specifically, all materials must be tested for those ex-

tractable metals listed in *Table 3* and any other metals that are relevant in the sense that their presence in the test material is known or can be reasonably anticipated.

PROCEDURE FOR EXTRACTION

Plastic materials used in packaging systems for medical articles do not dissolve under the conditions of use. Rather, substances derived from packaging systems accumulate in the packaged articles by the process of leaching (extraction). Thus, the appropriate and relevant sample-preparation process for assessing metals in a packaging system's materials of construction is extraction, as opposed to complete digestion, of the plastic material. *Solution S3* (acidic extraction) and *Solution S4* (alkaline extraction) prepared for *Physicochemical Tests* (*Table 2*) are the material extracts that are tested for extractable metals.

PROCEDURE FOR EXTRACT ANALYSIS

Instrumentation and methods are those specified in *Elemental Impurities—Procedures* 〈233〉 and include an inductively coupled plasma–atomic emission spectrometer and an inductively coupled plasma–mass spectrometer (see *Atomic Absorption Spectroscopy* 〈852〉), as directed.

Plastic Additives

POLYETHYLENE, CYCLIC OLEFINS, AND POLYPROPYLENE

These tests should be carried out in whole or in part as required due to the stated composition of the material.

• Phenolic Antioxidants

Solvent mixture: Acetonitrile and tetrahydrofuran (50:50, v/v)

Sample solution S7: Evaporate 50 mL of *Solution S2* to dryness under a vacuum at 45°. Dissolve the resulting residue with 5.0 mL of the *Solvent mixture* to produce *Sample solution S7*. Prepare a blank solution from the blank solution corresponding to *Solution S2*.

Sample solution S8: Evaporate 50 mL of *Solution S2* to dryness under a vacuum at 45°. Dissolve the residue with 5.0 mL of methylene chloride to produce *Sample solution S8*. Prepare a blank solution from the blank solution corresponding to *Solution S2*.

Sample solution S9 (cyclic olefins only): Evaporate 50 mL of *Solution S2* to dryness under a vacuum at 45°. Dissolve the residue in 5.0 mL of a mixture of equal volumes of acetonitrile and a 10 g/L solution of *tert*-butyl hydroperoxide in tetrahydrofuran. Close the flask and allow to stand for 1 h. The resulting solution is *Sample solution S9*. Prepare a blank solution using the blank of *Solution S2*.

Reference solutions

Of the following reference solutions, prepare only those that are necessary for the analysis of the phenolic antioxidants stated in the composition of the substance to be examined.

Reference solution A: 0.1 mg/mL of USP Butylated Hydroxytoluene RS and 0.24 mg/mL of USP Plastic Additive 01 RS prepared in the *Solvent mixture*

Reference solution B: 0.24 mg/mL of USP Plastic Additive 02 RS and 0.24 mg/mL of USP Plastic Additive 03 RS prepared in the *Solvent mixture*

Reference solution C: 0.24 mg/mL of USP Plastic Additive 04 RS and 0.24 mg/mL of USP Plastic Additive 05 RS prepared in methylene chloride

Reference solution D: 0.1 mg/mL of USP Butylated Hydroxytoluene RS prepared in the *Solvent mixture*

Reference solution E: 0.24 mg/mL of USP Plastic Additive 01 RS prepared in the *Solvent mixture*

Reference solution F: 0.24 mg/mL of USP Plastic Additive 06 RS prepared in the *Solvent mixture*

Reference solution G: 0.24 mg/mL of USP Plastic Additive 02 RS prepared in the *Solvent mixture*

Reference solution H: 0.24 mg/mL of USP Plastic Additive 03 RS prepared in the *Solvent mixture*

Reference solution I: 0.24 mg/mL of USP Plastic Additive 04 RS prepared in methylene chloride

Reference solution J: 0.24 mg/mL of USP Plastic Additive 05 RS prepared in methylene chloride

Test A: If the substance to be examined contains additive butylated hydroxytoluene and/or additive ethylene bis[3,3-bis[3-(1,1-dimethylethyl)-4-hydroxyphenyl]butanoate]

Chromatographic system

(See *Chromatography* 〈621〉, *Liquid Chromatography*.)

Column: 4.6-mm × 25-cm; 5-µm packing L1

Mobile phase: Acetonitrile and Purified Water (70:30, v/v)

Flow rate: 2 mL/min

Injection volume: 20 µL of *Sample solution S7*, corresponding blank solution, *Reference solution A*, and *Reference solution D*, *Reference solution E*, or both

Detector: UV 280 nm

Run time: 30 min

System suitability

Resolution: Minimum 8.0 between the additive butylated hydroxytoluene and additive ethylene bis[3,3-bis[3-(1,1-dimethylethyl)-4-hydroxyphenyl]butanoate] peaks, *Reference solution A*

Sample solution S7 shows only peaks caused by antioxidants stated in the composition and minor peaks that also correspond to the blank solution.

Analysis: The peak areas of *Sample solution S7* are less than the corresponding peak areas of *Reference solution D* or *Reference solution E.*

Test B: If the substance to be examined contains one or more of the following antioxidants: pentaerythrityl tetrakis[3-(3,5-di-*tert*-butyl-4-hydroxyphenyl)propionate; 2,2′,2″,6,6′,6″-hexa-*tert*-butyl-4,4′,4″-[(2,4,6-trimethyl-1,3,5-benzene-triyl)trismethylene]triphenol; octadecyl 3-(3,5-di-*tert*-butyl-4-hydroxyphenyl)propionate; tris(2,4-di-*tert*-butylphenyl) phosphate; 1,3,5-tris(3,5-di-*tert*-butyl-4-hydroxybenzyl)-*s*-triazine-2,4,6(1*H*,3*H*,5*H*)-trione

Chromatographic system: Carry out the test as described in *Test A* with the following modifications.

Mobile phase: Acetonitrile, tetrohydrofuran, and Purified Water (60:30:10, v/v/v)

Flow rate: 1.5 mL/min

Injection volume: 20 µL of *Sample solution S7*, corresponding blank solution, *Reference solution B*, and any *Reference solutions* of the antioxidants listed above that are stated in the composition

Detector: UV 280 nm

System suitability

Resolution: Minimum 2.0 between the additive pentaerythrityl tetrakis[3-(3,5-di-*tert*-butyl-4-hydroxyphenyl)propionate and additive 2,2′,2″,6,6′,6″-hexa-*tert*-butyl-4,4′,4″-[(2,4,6-trimethyl-1,3,5-benzene-triyl)trismethylene]triphenol peaks, *Reference solution B*

Sample solution S7 shows only peaks caused by antioxidants stated in the composition and minor peaks that also correspond to the blank solution.

Analysis: The peak areas of *Sample solution S7* are less than the corresponding areas of the *Reference solutions* of the antioxidants that are listed above and that are stated in the composition.

Test C: If the substance to be examined contains additive octadecyl-3-(3,5-di-*tert*-butyl-4-hydroxyphenyl)propionate and/or additive tris(2,4-di-*tert*-butylphenyl) phosphite

Chromatographic system: Carry out the test as described in *Test A* with the following modifications.

Mobile phase: Methanol, 2-propanol, and Purified Water (55:45:5, v/v/v)

Flow rate: 1.5 mL/min

Injection volume: 20 µL of *Sample solution S8*, corresponding blank solution, *Reference solution C*, and either *Reference solution I* or *Reference solution J*

Detector: UV 280 nm

System suitability

Resolution: Minimum 2.0 between the additive octadecyl-3-(3,5-di-*tert*-butyl-4-hydroxyphenyl)propionate and additive tris(2,4-di-*tert*-butylphenyl) phosphite peaks, *Reference solution C*

Sample solution S8 shows only peaks due to antioxidants stated in the composition and minor peaks that also correspond to the blank solution.

Analysis: The peak areas of *Sample solution S8* are less than the corresponding peak areas of *Reference solution I* or *Reference solution J*.

• NONPHENOLIC ANTIOXIDANTS

Methylene chloride, acidified: To 100 mL of methylene chloride add 10 mL of hydrochloric acid, shake, allow to stand, and separate the two layers. Use the lower layer.

Sample solution S10: Evaporate 100 mL of *Solution S2* to dryness under a vacuum at 45°. Dissolve the resulting residue with 2 mL of *Methylene chloride, acidified.*

Reference solution M: 6.0 mg/mL of USP Plastic Additive 08 RS prepared in methylene chloride. Dilute 2 mL of the solution with *Methylene chloride, acidified* to 10 mL.

Reference solution N: 6.0 mg/mL of USP Plastic Additive 09 RS prepared in methylene chloride. Dilute 2 mL of the solution with *Methylene chloride, acidified* to 10 mL.

Reference solution O: 6.0 mg/mL of USP Plastic Additive 10 RS prepared in methylene chloride. Dilute 2 mL of the solution with *Methylene chloride, acidified* to 10 mL.

Reference solution P: 6.0 mg/mL of USP Plastic Additive 10 RS, and 6.0 mg/mL of USP Plastic Additive 09 RS prepared in methylene chloride. Dilute 2 mL of the solution with *Methylene chloride, acidified* to 10 mL.

Chromatographic system

(See *Chromatography* ⟨621⟩, *Liquid Chromatography.*)

Plate: TLC silica gel GF_{254}

Mobile phase A: Hexane

Mobile phase B: Methylene chloride

Application: 20 µL of *Sample solution S10*, reference solution (*o*) and the reference solutions corresponding to all of the phenolic and nonphenolic antioxidants expected to be present in the test material

Development A: Over a path of 18 cm with *Mobile phase A;* dry in air
Development B: Over a path of 17 cm with *Mobile phase B;* dry in air
Detector: UV 254 nm; spray with alcoholic iodine solution and examine after 10–15 min
System suitability
Resolution: The chromatogram shows two clearly separated spots, *Reference solution P.*
Analysis: Any spots in the chromatogram of *Sample solution S10* are not more intense than the spots in the same positions in the chromatograms of the *Reference solutions.*

• **Copolymer of Dimethyl Succinate and (4-Hydroxy-2,2,6,6-tetramethylpiperidin-1-yl)ethanol (Cyclic Olefins Only)**
Solvent mixture: Hexane and anhydrous ethanol (89:11, v/v)
Sample solution S11: Evaporate 25 mL of *Solution S2* to dryness under a vacuum at 45°. Dissolve the residue with 10 mL of toluene and 10 mL of a 10-g/L solution of tetrabutylammonium hydroxide in a mixture of 35 volumes of toluene and 65 volumes of anhydrous ethanol. Boil under a reflux condenser for 3 h. Allow to cool, and filter if necessary, to produce *Sample solution S11.*
Reference solution Q: 6.0 mg/mL of USP Plastic Additive 11 RS prepared in toluene. Add 1 mL of this solution to 25 mL of the blank solution corresponding to *Solution S2,* and evaporate to dryness under a vacuum at 45°. Prepare a blank solution from the blank solution corresponding to *Solution S2.* Dissolve the residue with 10 mL of toluene and 10 mL of a 10-g/L solution of tetrabutylammonium hydroxide in a mixture of 35 volumes of toluene and 65 volumes of anhydrous ethanol. Boil under a reflux condenser for 3 h. Allow to cool, and filter if necessary.
Chromatographic system
(See *Chromatography* ⟨621⟩, *Liquid Chromatography.*)
Column: 4.6-mm × 25-cm; 5-µm packing L8
Mobile phase: Hexane and anhydrous ethanol (89:11, v/v)
Flow rate: 2 mL/min
Injection volume: 20 µL of *Sample solution S11,* the corresponding blank solution, and *Reference solution Q*
Detector: UV 227 nm
System suitability
Resolution: Minimum 7 between the peaks of the diol component and the diluents of *Reference solution Q.*
Analysis: The peak area of the diol component in *Sample solution S11* is less than the corresponding peak areas of *Reference solution Q.*

• **Amides and Stearates**
Sample solution: Use *Solution S10* described in *Nonphenolic Antioxidants.*
Reference solution R: 2.0 mg/mL of USP Stearic Acid RS prepared in methylene chloride
Reference solution S: 2.0 mg/mL of USP Plastic Additive 12 RS prepared in methylene chloride
Reference solution T: 2.0 mg/mL of USP Plastic Additive 13 RS prepared in methylene chloride
Test A
Chromatographic system
(See *Chromatography* ⟨621⟩, *Thin-Layer Chromatography.*)
Plate: TLC silica gel GF_{254}
Mobile phase: Dehydrated trimethylpentane and alcohol (75:25, v/v)
Application: 10 µL of *Sample solution S10* and *Reference solution R*
Development: Over a path of 10 cm with *Mobile phase;* dry in air
Detector: Spray with a 2-g/L solution of 2,6-dichlorophenol-indophenol sodium in dehydrated alcohol and heat in an oven at 120° for a few minutes to intensify the spots.
Analysis: Any spot corresponding to additive stearic acid in *Sample solution S10* is identical in position (R_f about 0.5) but is not more intense than the spot in the same position in *Reference solution R.*
Test B
Mobile phase A: Hexane
Mobile phase B: Methylene chloride and methanol (95:5, v/v)
Application: 10 µL of *Sample solution S10* and *Reference solution S* and *Reference solution T*
Development A: Over a path of 13 cm with *Mobile phase A;* dry in air
Development B: Over a path of 10 cm with *Mobile phase B;* dry in air
Detector: Spray with a 40-g/L solution of phosphomolybdic acid in alcohol, dehydrated, and heat in an oven at 120° until spots appear.
Analysis: Any spots corresponding to additives oleamide or erucamide in *Sample solution S10* are identical in position (R_f about 0.2) but are not more intense than the corresponding spots in *Reference solution S* and *Reference solution T.*

PLASTICIZED POLYVINYL CHLORIDE

• **Plasticized Polyvinyl Chloride**
Additives are di(2-ethylhexyl) phthalate, *N′N″*-diacylethylenediamines, epoxidized soya oil, and epoxidized linseed oil. Vinyl chloride monomer (VCM) is also monitored although it is a residual monomer and not an additive.

Solution A1: Add 2.0 g of the test material to 200 mL of peroxide-free ether and heat under a reflux condenser for 8 h. Separate the resulting residue B and extraction solution A by filtration. Evaporate extraction solution A to dryness under reduced pressure in a water bath at 30°, producing residue C. Dissolve residue C in 10 mL of toluene to produce *Solution A1*.

Precipitate B2: Dissolve residue B in 60 mL of ethylene chloride heating on a water bath under a reflux condenser, producing solution D. Filter the resulting solution D. Add the filtered solution D dropwise and with vigorous shaking to 600 mL of heptanes heated almost to boiling. Separate by hot filtration the coagulum B1 and the organic solution E. Allow solution E to cool; separate the precipitate B2 that forms upon cooling, and pass through a tared sintered-glass filter (pore size of 16–40 µm).

Reference solutions: 0.1 mg/mL solutions of USP Plastic Additive 14 RS, USP Plastic Additive 15 RS, and USP Plastic Additive 16 RS, respectively, in toluene

Chromatographic system

(See *Chromatography* ⟨621⟩, *Thin-Layer Chromatography*.)

Plate: TLC silica gel GF_{254} (1-mm thick)

Method: Apply 0.5 mL of *Solution A1* to the plate as a 30-mm × 3-mm band. Apply 5 µL of each *Reference solution* to the plate. Develop the plate over a path of 15 cm using toluene. Dry the plate carefully.

Additive di(2-ethylhexyl) phthalate: UV 254 nm; locate the zone corresponding to additive di(2-ethylhexyl) phthalate (R_f about 0.4). Remove the area of silica gel corresponding to this zone, mix with 40 mL of ethyl ether, and shake for 1 min. Filter, rinse filter with two quantities each of 10 mL of ethyl ether, add the rinsings to the filtrate, and evaporate to dryness. The residue weighs NMT 40 mg.

Additives epoxidized soya oil and epoxidized linseed oil: Expose the plate to iodine vapor for 5 min. Examine the chromatogram, and locate the band corresponding to additives epoxidized soya oil and epoxidized linseed oil (R_f = 0). Remove the area of silica gel corresponding to this band. Similarly, remove a corresponding area of silica gel as a blank reference. Separately mix both samples with separate 40-mL portions of methanol, shaking for 15 min. Filter, rinse the filter with two quantities of 10 mL of methanol, add the rinsings to the filtrate, and evaporate to dryness. The difference between the masses of both residues is NMT 10 mg.

Additive *N,N'*-diacylethylenediamines: Wash precipitate B2 with alcohol, absolute. Dry to constant mass over diphosphorus pentoxide, and weigh the filter. The precipitate weighs NMT 20 mg.

• **VINYL CHLORIDE**

Internal standard solution: Using a microsyringe, inject 10 µL of ethyl ether into 20.0 mL of *N,N*-dimethylacetamide, immersing the tip of the needle in the solvent. Immediately before use, dilute the solution to 1000 times its volume with *N,N*-dimethylacetamide.

Sample solution: Place 1.0 g of the test material in a 50-mL vial, and add 10.0 mL of the *Internal standard solution*. Close the vial, and secure with a stopper. Shake, avoiding contact between the stopper and the liquid. Place the vial in a water bath at 60 ± 1° for 2 h.

Vinyl chloride primary solution: [NOTE—Prepare under a ventilated hood.] Place 50.0 mL of *N,N*-dimethylacetamide in a 50-mL vial, stopper the vial, secure the stopper, and weigh to the nearest 0.1 mg. Fill a 50-mL polyethylene or polypropylene syringe with gaseous vinyl chloride, allow the gas to remain in contact with the syringe for about 3 min, empty the syringe, and fill again with 50 mL of gaseous vinyl chloride. Fit a hypodermic needle to the syringe, and reduce the volume of gas in the syringe from 50 to 25 mL. Inject the remaining 25 mL of vinyl chloride slowly into the vial, shaking gently and avoiding contact between the liquid and the needle. Weigh the vial again; the increase in mass is about 60 mg (1 µL of the solution obtained contains about 1.2 µg of vinyl chloride). Allow to stand for 2 h. Store the primary solution in a refrigerator.

Vinyl chloride standard solution: To 1 volume of the *Vinyl chloride primary solution* add 3 volumes of *N,N*-dimethylacetamide.

Reference solutions: Place 10.0 mL of the *Internal standard solution* in each of six 50-mL vials. Close the vials, and secure the stoppers. Inject 1, 2, 3, 5, and 10 µL, respectively, of the *Vinyl chloride standard solution* into five of the vials. The six solutions thus obtained contain, respectively, 0, 0.3, 0.6, 0.9, 1.5, and 3 µg of vinyl chloride. Shake, avoiding contact between the stopper and the liquid. Place the vials in a water bath at 60 ± 1° for 2 h.

Chromatographic system

(See *Chromatography* ⟨621⟩, *Gas Chromatography*.)

Column: Stainless steel 3-m × 3-mm packed with silanized diatomaceous earth for gas chromatography impregnated with 5% m/m of dimethylstearylamide and 5% m/m of polyethylene glycol 400

Gas carrier: Nitrogen for chromatography

Flow rate: 30 mL/min

Temperatures

Column: 45°

Injection port: 100°

Detector: 150°

Analysis

Sample: Inject 1 mL of the head space of each vial containing the *Sample solution* and the *Reference solutions*. Calculate the amount of vinyl chloride in the *Sample solution* by comparing the test result of the *Sample solution* with the test results of

General Chapters

the *Reference solutions*. Calculate the amount of vinyl chloride in the test material by dividing the amount of vinyl chloride in the *Sample solution* by 1.0 g, producing a result in µg/g or ppm.

- **USP Reference Standards ⟨11⟩**

  USP Butylated Hydroxytoluene RS
  USP Cyclic Olefin Polymer RS
  USP Cyclic Olefin Copolymer RS
  USP High-Density Polyethylene RS
  USP Homopolymer Polypropylene RS
  USP Low-Density Polyethylene RS
  USP Plastic Additive 01 RS
    Ethylene bis[3,3-bis[3-(1,1-dimethylethyl)-4-hydroxyphenyl]butanoate].
  USP Plastic Additive 02 RS
    Pentaerythrityl tetrakis[3-(3,5-di-*tert*-butyl-4-hydroxyphenyl)propionate].
  USP Plastic Additive 03 RS
    2,2′,2″,6,6′,6″-Hexa-*tert*-butyl-4,4′,4″-[(2,4,6-trimethyl-1,3,5-benzenetriyl)trismethylene]triphenol.
  USP Plastic Additive 04 RS
    Octadecyl 3-(3,5-di-*tert*-butyl-4-hydroxyphenyl)propionate.
  USP Plastic Additive 05 RS
    Tris(2,4-di-*tert*-butylphenyl) phosphate.
  USP Plastic Additive 06 RS
    1,3,5-Tris(3,5-di-*tert*-butyl-4-hydroxybenzyl)-*s*-triazine-2,4,6(1*H*,3*H*,5*H*)-trione.
  USP Plastic Additive 08 RS
    Dioctadecyl disulfide.
  USP Plastic Additive 09 RS
    Didodecyl 3,3′-thiodipropionate.
  USP Plastic Additive 10 RS
    Dioctadecyl 3,3′-thiodipropionate.
  USP Plastic Additive 11 RS
    Copolymer of dimethyl succinate and (4-hydroxy-2,2,6,6-tetramethylpiperidin-1-yl)ethanol.
  USP Plastic Additive 12 RS
    Oleamide.
  USP Plastic Additive 13 RS
    Erucamide.
  USP Plastic Additive 14 RS
    Di(2-ethylhexyl) phthalate.
  USP Plastic Additive 15 RS
    Epoxidized soya oil.
  USP Plastic Additive 16 RS
    Epoxidized linseed oil.
  USP Polyethylene Terephthalate RS
  USP Polyethylene Terephthalate G RS
  USP Plasticized Polyvinyl Chloride RS
  USP Stearic Acid RS

⟨661.2⟩ PLASTIC PACKAGING SYSTEMS FOR PHARMACEUTICAL USE

INTRODUCTION

A packaging system, as defined in *Packaging and Storage Requirements* ⟨659⟩, contains or is intended to contain a medical article such as a pharmaceutical drug product. As such, a packaging system provides the means for manufacturing, distributing, and storing these articles and products, and potentially for administering a drug product. A plastic packaging system is composed wholly or of a substantial portion of plastic materials. The term "plastic packaging system" refers to the sum of packaging components that together contain the pharmaceutical product, including closures. This sum of packaging components includes: 1) primary packaging components, which are those that directly contact the pharmaceutical product at some time during the product's manufacturing, distribution, storage, or use; and 2) secondary packaging components, which are those that may interact with the pharmaceutical product during the product's manufacturing, distribution, storage, and use, although the component does not directly contact the pharmaceutical product.

SCOPE

Plastic packaging systems for pharmaceutical use include, but are not limited to, bags, bottles, vials, ampoules, cartridges, dry powder and metered-dose inhalers, prefillable syringes, blisters, pouches, and their associated closures and secondary components like labels and printing overpouches. Plastic materials that are commonly used in packaging systems include polyethylene, polypropylene, cyclic olefins, polyethylene terephthalate, polyethylene terephthalate G, and plasticized polyvinyl chloride, among others.

Drug products can chemically interact with their associated packaging systems and/or the system's plastic materials and components of construction while the product is being manufactured, shipped, stored, and administered. The magnitude of these interactions must not be such that the interactions adversely affect the suitability for use of the drug product or the packaging system. Although suitability for use includes several quality aspects of the packaged drug product and its performance, the suitability for use aspect specifically addressed in this chapter is patient safety.

The applicant who secures and owns the regulatory approval of a packaging system or packaged drug product is responsible for establishing that the product's packaging system meets these expectations, and thus is suited for its intended use, by ensuring that the packaging system itself and/or the packaged pharmaceutical product has been appropriately tested and that the test results have been appropriately evaluated. A packaging system is chemically suited for its intended use with respect to safety if:

- The packaging system is constructed from well-characterized materials that have been intentionally chosen for use as established by testing according to *Plastic Materials of Construction* ⟨661.1⟩.
- The packaging system's general physicochemical properties have been established.
- The packaging system's biocompatibility (biological reactivity) has been appropriately established.
- The packaging system has been established to be safe by means of the appropriate chemical testing, such as extractables or leachables profiling, and toxicological assessment of the test data. This combination of chemical testing and toxicological assessment is termed "chemical safety assessment".

This chapter applies specifically to plastic packaging systems and should not be applied to materials from which plastic packaging systems are constructed. The testing and qualification of materials of construction used in packaging systems are addressed in ⟨661.1⟩. As deemed appropriate by the applicant who secures and owns the regulatory approval of a packaging system or packaged drug product, components of packaging systems may be tested by the methods and held accountable to the specifications provided in this chapter.

The test methods and specifications contained within this chapter have been developed for general application to plastic packaging systems. In view of the wide variety of materials of construction and packaging systems available, and recognizing possible new developments in materials and packaging systems, the publication of a test method and specification does not exclude the use, in justified circumstances, of packaging systems that have been tested with different methods or that comply with other specifications, subject to approval by the appropriate regulatory authority.

TEST METHODS

Biological Reactivity

In vitro biological tests are performed on the packaging systems according to the test procedures described in *Biological Reactivity Tests, In Vitro* ⟨87⟩. Packaging systems that meet the requirements of the in vitro tests are not required to undergo any further in vivo testing. In addition, the in vivo testing described in *Biological Reactivity Tests, In Vivo* ⟨88⟩ is not required for packaging systems used with certain dosage forms (oral and topical products). Packaging systems that do not meet the requirements of the biological reactivity tests (⟨87⟩ and ⟨88⟩, if appropriate) are not suitable as packaging systems for pharmaceutical use. If a plastic class designation (classes I–VI) is needed, analysts should perform the appropriate in vivo tests specified by ⟨88⟩. Information about the appropriate plastic class that should be selected is provided in *The Biocompatibility of Materials Used in Drug Containers, Medical Devices, and Implants* ⟨1031⟩.

Physicochemical Tests

WATER EXTRACTION

Solution C1: Fill the packaging system to its nominal capacity with Purified Water and close it, if possible, using the normal means of closure. Otherwise, close with an inert closure. Heat in an autoclave until 121 ± 2° is reached (typically in 20–30 min), and maintain at this temperature for 30 min. If heating at 121° leads to the deterioration of the container, heat at 100 ± 2° for 2 h or at 70 ± 2° for 24 ± 2 h. Cool the filled packaging system and empty its contents. The emptied contents are *Solution C1*. Use *Solution C1* within 4 h of preparation. Prepare a blank by heating Purified Water in a borosilicate glass flask closed with an inert closure; heat the flask at the same temperature and for the same length of time as used for the preparation of *Solution C1*.

General Chapters

Absorbance: Determine the spectrum of *Solution C1* between 230 and 360 nm, using the *Solution C1* blank as the compensation liquid.

Acidity or alkalinity: Conduct the test for *Acidity or alkalinity* only when packaging systems are intended to hold a liquid product or a product that is dissolved in its container before use.

To 20 mL of *Solution C1* obtained either as a portion of the fill solution or by combining the fill solution from several containers, add 0.1 mL of phenolphthalein TS; note the solution's color. Add 0.4 mL of 0.01 N sodium hydroxide; note the solution's color. Add 0.8 mL of 0.01 N hydrochloric acid and 0.1 mL of methyl red TS 2; note the solution's color.

Methyl red TS 2: Test for sensitivity: Add 0.1 mL of methyl red solution to 100 mL of carbon dioxide-free Purified Water and 0.05 mL of 0.02 N hydrochloric acid. NMT 0.1 mL of 0.02 N hydrochloric acid is required to change the color from red to yellow.

TOTAL ORGANIC CARBON

Refer to *Total Organic Carbon* ⟨643⟩.

The total organic carbon (TOC) content of *Solution C1* is measured according to ⟨643⟩. However, ⟨643⟩ is designed for testing high-purity water that has low TOC values. Because of extracted organic substances, material extracts may have TOC values that are much higher than those of Purified Water. Thus, the TOC analyses performed have a limit of detection of 0.2 mg/L (ppm) and have a demonstrated linear dynamic range of 0.2–20 mg/L (which encompasses the TOC limit). A linear range with a higher upper concentration can be used if linearity is established. If sample extracts exceed this upper linear range, then they should be diluted appropriately for analysis.

TOTAL TEREPHTHALOYL MOIETIES IN POLYETHYLENE TEREPHTHALATE AND POLYETHYLENE TEREPHTHALATE G PACKAGING SYSTEMS

Preparations

Polyethylene terephthalate extracting media: 50% Alcohol (dilute 125 mL of alcohol, dehydrated R with Purified Water to 238 mL, and mix), *n*-heptane, and Purified Water. For each extracting medium, fill a sufficient number of test packaging systems to 90% of their nominal capacity to obtain NLT 30 mL. Fill a corresponding number of glass bottles with each extracting medium for use as blanks. Fit the bottles with impervious seals such as aluminum foil and apply closures. Incubate the test packaging systems and the glass bottles at 49° for 10 days. Remove the test systems and glass bottles, and store at room temperature. Do not transfer the extracting medium samples to alternative storage vessels.

Polyethylene terephthalate G extracting media: 25% Alcohol (dilute 125 mL of 50% alcohol with Purified Water to 250 mL, and mix), *n*-heptane, and Purified Water. Proceed as directed for *Polyethylene terephthalate extracting media.*

Procedure: Determine the absorbance of the 50% alcohol or 25% alcohol extracts in a 1-cm cell at the wavelength of maximum absorbance at about 244 nm (see *Ultraviolet-Visible Spectroscopy* ⟨857⟩). For the blank, use the corresponding extracting medium blank.

Determine the absorbance of the *n*-heptane extract in a 1-cm cell at the wavelength of maximum absorbance at about 240 nm (see ⟨857⟩). For the blank, use the *n*-heptane extracting medium.

ETHYLENE GLYCOL IN POLYETHYLENE TEREPHTHALATE AND POLYETHYLENE TEREPHTHALATE G PACKAGING SYSTEMS

Preparations

Periodic acid solution: Dissolve 125 mg of periodic acid in 10 mL of Purified Water.

Dilute sulfuric acid: To 50 mL of Purified Water slowly add and with constant stirring 50 mL of sulfuric acid, and allow to cool to room temperature.

Sodium bisulfite solution: Dissolve 0.1 g of sodium bisulfite in 10 mL of water. Use this solution within 7 days.

Disodium chromotropate solution: Dissolve 100 mg of chromotropic acid, disodium salt R in 100 mL of sulfuric acid. Protect this solution from light, and use within 7 days.

Standard solution: Dissolve an accurately weighed quantity of ethylene glycol in Purified Water, and dilute quantitatively and stepwise if necessary to obtain a solution having a known concentration of about 1 µg/mL.

Sample solution: Use the Purified Water extract from *Total Terephthaloyl Moieties in Polyethylene Terephthalate and Polyethylene Terephthalate G Packaging Systems.*

Procedure: Transfer 1.0 mL of the *Standard solution* to a 10-mL volumetric flask. Transfer 1.0 mL of the *Sample solution* to a second 10-mL volumetric flask. Transfer 1.0 mL of the Purified Water extracting medium to a third 10-mL volumetric flask to serve as the method blank. To each of the three flasks, add 100 µL of *Periodic acid solution,* swirl to mix, and allow to stand for 60 min. Add 1.0 mL of *Sodium bisulfite solution* to each flask, and mix. Add 100 µL of *Disodium chromotropate solution* to each flask, and mix. [NOTE—All solutions should be analyzed within 1 h after addition of the *Disodium chromotropate solution.*] Cautiously add 6 mL of sulfuric acid to each flask, mix, and allow the solutions to cool to room temperature.

CAUTION—*Dilution of sulfuric acid produces substantial heat and can cause the solution to boil. Perform this addition carefully. Sulfur dioxide gas will be evolved. Use of a fume hood is recommended.*

Dilute each solution with *Dilute sulfuric acid* to volume, and mix. Concomitantly determine the absorbances of the solutions from the *Standard solution* and the *Sample solution* in 1-cm cells at the wavelength of maximum absorbance at about 575 nm (see ⟨857⟩), using the solution from the Purified Water extracting medium as the method blank.

Chemical Safety Assessment

The safety of the packaging system must be established on the basis of relevant and appropriate chemical testing of 1) the packaging system, 2) its materials of construction, 3) its components of construction as appropriate, or 4) the packaged drug product. Appropriate chemical testing of materials of construction is specified in ⟨661.1⟩ and may include the demonstration of conformance with the appropriate sections of 21 CFR Indirect Food Additives regulations. With regard to the testing of the packaging system (and/or its components of construction as appropriate) and the packaged drug product, an appropriate and rigorous chemical safety assessment would include extractables testing of the packaging system and leachables testing of the packaged drug product. It is expected that the design of the extractables and leachables study would be based on sound and justifiable scientific principles, and that the studies themselves would be consistent with 1) the nature of both the packaging system and packaged drug product, 2) the clinical use of the packaged drug product, and 3) the perceived safety risk associated with the packaging system and dosage form. Although no dosage form is excluded from this testing requirement, it is anticipated that the nature and degree of testing would be dosage form-dependent and consistent with a risk-based approach. In view of the considerable diversity of packaging systems, dosage forms, and packaged drug products, it is not possible to provide specific test conditions for performing extractables and leachables studies. Nevertheless, general essential principles and demonstrated best-practices recommendations for extractable and leachable studies can be found in *Assessment of Extractables Associated with Pharmaceutical Packaging/Delivery Systems* ⟨1663⟩ and *Assessment of Drug Product Leachables Associated with Pharmaceutical Packaging/Delivery Systems* ⟨1664⟩, respectively. These chapters may serve as helpful resources for designing and justifying rigorous and appropriate studies.

Alternative testing strategies for chemical safety assessment may be appropriate in justified circumstances, subject to agreement by an appropriate regulatory authority.

SPECIFICATIONS

Biological Reactivity

Test results are consistent with the relevant chapters (⟨87⟩ or ⟨88⟩).

Physicochemical Tests

Appearance of solution: *Solution C1* is clear and colorless.
Absorbance: NMT 0.20
Acidity or alkalinity: The solution is colorless after the addition of phenolphthalein solution, pink after the addition of 0.01 N sodium hydroxide, and orange-red or red after the addition of 0.01 N hydrochloric acid and 0.1 mL of methyl red solution.
Total organic content: The difference in TOC concentrations between *Solution C1* and a suitable blank is NMT 8 mg/L.
Ethylene glycol in polyethylene terephthalate and polyethylene terephthalate G packaging systems: The absorbance of the solution from the *Sample solution* does not exceed that of the solution from the *Standard solution*, corresponding to NMT 1 ppm of ethylene glycol.
Total terephthaloyl moieties in polyethylene terephthalate and polyethylene terephthalate G packaging systems: The absorbance of the 50% alcohol, 25% alcohol, and *n*-heptane extracts does not exceed 0.150, corresponding to NMT 1 ppm of total terephthaloyl moieties.

Chemical Safety Assessment

The data and information obtained in the *Chemical Safety Assessment* must be interpreted in the context of establishing the patient safety risk associated with the use of the packaging system and the administration of the packaged drug product. Most typically, such an interpretation of the chemical data involves the toxicological safety assessment of extractables and leachables data, supported, as appropriate, by other relevant testing. In this circumstance, the toxicological safety assessment should be performed for each individual relevant member of the packaging system's extractables profile (or each relevant member of the contained product's leachables profile, as appropriate). The assessment should demonstrate that the user safety risk associated with each individual relevant leachable (or extractable as a worst-case leachable) is acceptable and that the probable safety risk posed by all leachables (or extractables as worst-case leachables), considered individually, is within acceptable parameters. The term "relevant extractable or leachable" refers to those extractables that are present in a packaging system and those leachables that are present in a packaged drug product at levels sufficiently high that they have been deemed to have a potential safety impact, based, for example, on a comparison of the levels of extractables or leachables with a recognized and well-established safety alert threshold. Establishing and justifying the acceptable parameters used to assess the safety impact is the

General Chapters

responsibility of the applicant who secures and owns the regulatory approval of a packaging system or packaged drug product; such acceptable parameters must be based on and derived from the sound application of established principles of toxicological safety assessment.

For leachables that are also elemental impurities, note that limits for elemental impurities in marketed pharmaceutical drug products (but not specifically packaging systems) can be found in *Elemental Impurities—Limits* ⟨232⟩.

Alternative chemical safety assessment specifications may be appropriate in justified circumstances, subject to agreement by an appropriate regulatory authority.

⟨670⟩ AUXILIARY PACKAGING COMPONENTS

Auxiliary packaging components are articles that are used to support or enhance container–closure systems. These articles include, but are not limited to, pharmaceutical coil and desiccants for containers. The components covered in this chapter must meet the applicable requirements provided and the additional applicable requirements provided in other specified chapters.

Change to read:

General Chapters

PHARMACEUTICAL COIL

Pharmaceutical coil is used as a filling material in multiple-unit containers for solid oral dosage forms to prevent breakage of tablets or capsules during shipment. The filling material should be discarded once the bottle is opened.

• SOLUTIONS

Iodinated zinc chloride solution: Dissolve 20 g of zinc chloride and 6.5 g of potassium iodide in 10.5 mL of *Purified Water*. Add 0.5 g of iodine, and shake for 15 min. Filter if necessary. Protect from light.

Zinc chloride–formic acid solution: Dissolve 20 g of zinc chloride in 80 g of an 850 g/L solution of anhydrous formic acid.

1% DuPont Fiber Identification Stain No. 4[1] solution: Dissolve 3.8 g of powdered stain in 378.5 mL of deionized water.

• COTTON PHARMACEUTICAL COIL

Purified cotton is the hair of the seed of cultivated varieties of *Gossypium hirsutum* Linné, or of other species of *Gossypium* (Fam. Malvaceae). It is deprived of fatty matter and bleached, and does not contain more than traces of leaf residue, pericarp, seed coat, or other impurities. Cotton pharmaceutical coil is used in bottles of solid oral dosage forms to prevent breakage.

Identification

A. When examined under a microscope, each fiber is seen to consist of a single cell, up to about 4 cm long and 40 µm wide, in the form of a flattened tube with thick and rounded walls that are often twisted.

B. When treated with *Iodinated zinc chloride solution*, the fibers become violet.

C. To 0.1 g of fibers add 10 mL of *Zinc chloride–formic acid solution*, heat to 40°, and allow to stand for 2 h, shaking occasionally: the fibers do not dissolve.

D. Weigh about 5 g of fibers, wet with water, and squeeze out the excess. Add fibers to 100 mL of a boiling solution of a *1% DuPont Fiber Identification Stain No. 4 solution*, and gently boil for at least 1 min. Remove the fibers, rinse well in cold water, and squeeze out the excess moisture: the fibers become green.

Acidity or alkalinity: Immerse about 10 g of fibers in 100 mL of recently boiled and cooled *Purified Water*, and allow to macerate for 2 h. Decant 25-mL portions of the water, with the aid of a glass rod, into each of two dishes. To one portion add 3 drops of phenolphthalein TS, and to the other portion add 1 drop of methyl orange TS. Neither portion appears pink when viewed against a white background.

Fluorescence: Examine a layer about 5 mm in thickness under UV light at 365 nm. It displays only a slight brownish-violet fluorescence and a few yellow particles. It shows no intense blue fluorescence, apart from that which may be shown by a few isolated fibers.

Residual hydrogen peroxide concentration: Place 1 g of fibers in a beaker containing 30 mL of *Purified Water*, and stir for 3 min with a stirring rod. Pour contents into another clean container (do not squeeze sample), or alternatively, remove the fibers from the solution with clean tweezers. Remove a peroxide analytical test strip[2] from its container, and immerse the test end into the sample liquid for 2 s. Shake to remove the excess liquid, immediately insert the test strip into a suitable reflectometry instrument, and record the reading in mg/kg (ppm), and calculate residual hydrogen peroxide concentration in ppm.

[1] DuPont Fiber Identification Stain No. 4 is available from Pylam Products Co., 2175 East Cedar Street, Tempe, AZ 85281; www.pylamdyes.com.

[2] A suitable analysis system consisting of Reflectoquant® peroxide test strips and a RQflex® reflectometry instrument may be obtained from EMD Chemicals Inc., 480 S. Democrat Road, Gibbstown, NJ 08027; www.emdchemicals.com.

For an alternate method, place 20 g in a beaker, add 400 mL of *Purified Water*, stir, add 20 mL of 20% sulfuric acid, and stir the contents. Titrate with 0.100 N potassium permanganate solution to a faint pink color that remains for 30 s. Record the amount of titer, and calculate the concentration in ppm.

NMT 50 ppm is found using either method.

Loss on Drying ⟨731⟩

Analysis: Dry 5 g of fibers in an oven at 105° to constant weight.

Acceptance criteria: NMT 8.0%

Residue on Ignition ⟨281⟩

Analysis: Place 5 g of fibers in a porcelain or platinum dish, and moisten with 2 N sulfuric acid. Gently heat the cotton until it is charred, then ignite more strongly until the carbon is completely consumed.

Acceptance criteria: NMT 0.20%

Water-soluble substances: Place 10 g of fibers in a beaker containing 1000 mL of *Purified Water*, and boil gently for 30 min, adding water as required to maintain the volume. Pour the water through a funnel into another vessel, and press out the excess water from the cotton with a glass rod. Wash the cotton in the funnel with two 250-mL portions of boiling water, pressing the cotton after each washing. Filter the combined extract and washings, and wash the filter thoroughly with hot water. Evaporate the combined extract and washings to a small volume, transfer to a tared porcelain or platinum dish, evaporate to dryness, and dry the residue at 105° to constant weight. The residue weighs NMT 0.35%.

Fatty matter: Pack 10 g of fibers in a Soxhlet extractor provided with a tared receiver, and extract with ethyl ether for 4 h at a rate such that the ether siphons over NLT 4 times per h. The ethyl ether solution in the flask shows no trace of blue, green, or brownish color. Evaporate the extract to dryness, and dry at 105° for 1 h. The weight of the residue does not exceed 0.7%.

Dyes: Pack about 10 g of fibers in a narrow percolator, and extract slowly with alcohol until the percolate measures 50 mL. When observed downward through a column 20 cm in depth, the percolate may show a yellowish color, but not a blue or a green tint.

Other foreign matter: Pinches contain no oil stains or metallic particles by visual inspection.

• **RAYON PHARMACEUTICAL COIL**

Rayon pharmaceutical coil is a fibrous form of bleached, regenerated cellulose, to be used as a filler in bottles of solid oral dosage forms to prevent breakage. It consists exclusively of rayon fibers except for a few isolated foreign fibers that may be present. [NOTE—Rayon pharmaceutical coil has been found to be a potential source of dissolution problems for gelatin capsules or gelatin-coated tablets resulting from gelatin cross-linking.]

Identification

A. When treated with *Iodinated zinc chloride solution*, the fibers become violet.

B. Add 10 mL of *Zinc chloride–formic acid solution* to 0.1 g of fibers, heat to 40°, and allow to stand for 2 h, shaking occasionally: the fibers dissolve completely, except for mat rayon fibers where titanium particles remain.

C. Weigh about 5 g of fibers, wet with water, and squeeze out the excess. Add fibers to 100 mL of a boiling solution of a *1% DuPont Fiber Identification Stain No. 4 solution*, and gently boil for at least 1 min. Remove the fibers, rinse well in cold water, and squeeze out the excess moisture: the fibers become blue–green.

Acidity or alkalinity, Fluorescence, Fatty matter, Dyes, and **Other foreign matter:** Proceed as directed under *Cotton Pharmaceutical Coil*, except use rayon pharmaceutical coil. Sample weight for fatty matter is 5 g and weight of residue does not exceed 0.5%.

Loss on Drying ⟨731⟩

Analysis: Dry 5 g of fibers in an oven at 105° to constant weight.

Acceptance criteria: NMT 11.0%

Residue on Ignition ⟨281⟩**:** NMT 1.50%, determined on a 5-g test specimen

Acid-insoluble ash: To the residue obtained in the test for *Residue on Ignition*, add 25 mL of 3 N hydrochloric acid, and boil for 5 min. Collect the insoluble matter on a tared filtering crucible, wash with hot water, ignite, and weigh: the residue weighs NMT 1.25%.

Water-soluble substances: Proceed as directed under *Cotton Pharmaceutical Coil*, except to use rayon pharmaceutical coil. The residue weighs NMT 1.0%.

• **POLYESTER PHARMACEUTICAL COIL**

Polyester pharmaceutical coil is a white odorless material, to be used as a filler in bottles of solid oral dosage forms to prevent breakage.

Identification

A. Proceed as directed under *Infrared spectroscopy* in the *Test Methods* section. Determine the IR spectrum from 4000 to 650 cm^{-1} (2.5 to 15 μm). The spectrum obtained from the specimen exhibits major absorption bands only at the same wavelengths as the spectrum of USP Polyethylene Terephthalate RS.

B. Weigh about 5 g of fibers, wet with water, and squeeze out excess. Add fibers to 100 mL of a boiling solution of a *1% DuPont Fiber Identification Stain No. 4 solution*, and gently boil for at least 1 min. Remove the fibers, rinse well in cold water, and squeeze out the excess moisture: the fibers become pale orange.

Acidity or alkalinity: Proceed as directed under *Cotton Pharmaceutical Coil*, except to use polyester pharmaceutical coil.

Loss on Drying 〈731〉
Analysis: Dry 5 g of fibers in an oven at 105° to constant weight.
Acceptance criteria: NMT 1.0%
Residue on Ignition 〈281〉**:** NMT 0.5%, determined on a 5-g test specimen
Finish on fibers: The finish on fibers used for processing should comply with FDA food contact regulations.

• **Test Methods**

Infrared spectroscopy[3]
Apparatus: FTIR or a double-beam spectrophotometer capable of scanning from 4000 to 650 cm^{-1} (2.5–15 μm).
Specimen preparation: ▲The ATR 〈197A〉 technique can be used as alternative methods where the Reference Standard spectra is similarly obtained.▲USP40
Method 1 (potassium bromide disc)**:** Use scissors to cut polyester fibers (1–3 mg) into short lengths (less than 1 mm long), mix with 200 mg of powdered potassium bromide, and grind in a ball mill for 1–2 min. Transfer to potassium bromide-disc die, and form a disc.
Method 2 (melt film)**:** Produce film by pressing polyester fibers between TFE-fluorocarbon sheets and place between heated plates.

Change to read:

DESICCANTS

Desiccants are used to remove moisture from air in containers in order to protect drug products, particularly solid oral dosage forms. They are supplied in a number of different packaging materials including cotton, Kraft paper, rayon and polyester cloth bags, perforated plastic, polymer films, polymer housings or Tyvek®. The most common types of commercial desiccants are bentonite, calcium chloride, calcium oxide, molecular sieves, and silica gel. Other desiccants are subject to appropriate testing to ensure suitability for the intended application.

Where desiccants are incorporated directly into the wall or cap of packaging containers or bound by a carrier material, use unincorporated desiccant in the test methods. For desiccants that are loaded with a predetermined moisture content, perform the testing before the moisture has been loaded or after the desiccant has been regenerated.

• **Bentonite**

Bentonite clay (also referred to as montmorillonite clay) is a native, colloidal, hydrated aluminum silicate.
Appearance: Grayish-white powder or pellets with a yellowish or pinkish tint
Identification—X-Ray Diffraction 〈941〉**:** For *Sample preparation A*, the largest peak corresponds to a *d* value between 15.0 and 17.2 Å. The major peak in the region between 1.48 and 1.54 Å from the pattern of *Sample preparation B* is between 1.492 and 1.504 Å.
Identification—precipitation: Formation of a gelatinous white precipitate
Inorganic impurities
Arsenic: NMT 10 mg/kg
Lead: NMT 15 mg/kg
Specific tests
pH 〈791〉**:** 4.5–10.5. Disperse 4.0 g in 200 mL of water, mix vigorously to facilitate wetting.
Loss on Drying 〈731〉**:** Dry a 5–10 g sample at 110° to a constant weight: it loses NMT 3.0%.
[Note—Conduct assay immediately after opening the original container.]
Moisture adsorption capacity
NLT 13% at 40% ± 5% relative humidity (RH) and 25 ± 2°
NLT 23% at 80% ± 5% RH and 25 ± 2°
Test methods
Identification—X-ray diffraction
Sample preparation A: Add 2 g in small portions to 100 mL of water with intense agitation. Allow to stand for 12 h to ensure complete hydration. Place 2 mL of the mixture so obtained on a suitable glass slide, and allow to air-dry at room temperature to produce an oriented film. Place the slide in a vacuum desiccator over a free surface of ethylene glycol. Evacuate the desiccator, and close the stopcock so that ethylene glycol saturates the desiccator chamber. Allow the slide to stand for 12 h.
Sample preparation B: Prepare a random powder specimen of the sample.
Analysis: *Sample preparation A* and *Sample preparation B*. Record the X-ray diffraction pattern of the samples, and determine the *d* values.
Identification—precipitation
Sample: 5 g
Analysis: Add 1 g of potassium nitrate and 3 g of anhydrous sodium carbonate to the *Sample* contained in a metal crucible, heat until the mixture has melted, and allow it to cool. Add 20 mL of boiling water to the residue, mix, filter, and

---

[3] Additional information on fiber identification methods may be found in "Standard Test Methods for Identification of Fibers in Textiles". Current version of ASTM Method D276, published by ASTM International, 100 Barr Harbor Drive, P.O. Box C700, West Conshohocken, PA 19428-2959; www.astm.org.

General Chapters

wash the residue with 50 mL of water. Add 1 mL of hydrochloric acid and 5 mL of water to the residue, and filter. Add 1 mL of 10 N sodium hydroxide to the filtrate, filter, and add 3 mL of 2 M ammonium chloride.

Arsenic

Sample solution: Transfer 8.0 g of dried sample into a 250-mL beaker containing 100 mL of dilute hydrochloric acid (1 in 25), mix, and cover with a watch glass. Boil gently, with occasional stirring, for 15 min without allowing excessive foaming. Pass the hot supernatant liquid through a rapid-flow filter paper into a 200-mL volumetric flask, and wash the filter with four 25-mL portions of hot dilute hydrochloric acid (1 in 25), collecting the washings in the volumetric flask. Cool the combined filtrates to room temperature, add dilute hydrochloric acid (1 in 25) to volume and mix.

Arsenic trioxide stock solution: Accurately weigh 132.0 mg of arsenic trioxide, previously dried at 105° for 1 h, and dissolve in 5 mL of sodium hydroxide solution (1 in 5) in a 1000-mL volumetric flask. Neutralize the solution with 2 N sulfuric acid, add an additional 10 mL of 2 N sulfuric acid, and bring to volume with recently boiled and cooled water and mix.

Standard arsenic solution: Dilute the *Arsenic trioxide stock solution* to obtain solutions of suitable concentrations, adaptable to the linear or working range of the instrument. Keep in an all-glass container, and use within 3 days.

Analysis: Proceed according to *Elemental Impurities—Procedures* ⟨233⟩.

Lead

Sample solution: Transfer 3.75 g of sample into a 250-mL beaker containing 100 mL of dilute hydrochloric acid (1 in 25), stir, and cover with a watch glass. Boil for 15 min, then cool to room temperature, and pass through a rapid-flow filter paper into a 400-mL beaker. Wash the filter with four 25-mL portions of hot water, collecting the washings in the 400-mL beaker. Concentrate the combined extracts by gentle boiling to approximately 20 mL. If a precipitate forms, add 2–3 drops of nitric acid, heat to boiling, and cool to room temperature. Pass the concentrated extracts through a rapid-flow filter paper into a 50-mL volumetric flask. Transfer the remaining contents of the 400-mL beaker through the filter paper and into the flask with water. Dilute with water to volume.

Lead nitrate stock solution: Dissolve 159.8 mg of lead nitrate in 100 mL of water to which has been added 1 mL of nitric acid, then dilute with water to 1000 mL. Prepare and store this solution in glass containers free from soluble lead salts.

Standard lead solution: On the day of use, dilute the *Lead nitrate stock solution* to obtain solutions of suitable concentrations, adaptable to the linear or working range of the instrument.

Analysis: Proceed according to ⟨233⟩.

Moisture adsorption capacity

Equipment: Temperature-humidity chambers capable of controlled humidity at 40% ± 5% RH and 80% ± 5% RH at 25 ± 2° or a desiccator containing water-saturated salts that provide %RH at the required level plus an oven capable of maintaining 25 ± 2°.

Method: 5–10 g. Remove the sample from the packaging material. Where absorbents are incorporated directly into the wall or cap of packaging containers, use unincorporated desiccant. Add the sample to the humidity chamber or desiccator and measure the weight gain over time until this reaches equilibrium when two successive consecutive weighings do not differ by more than 3 mg/g of substance taken, the second weighing following an additional 3 ± 1 h of storage at the required temperature and humidity conditions. Calculate the adsorption capacity as percentage weight gained over the initial sample weight. Where two absorbents are packaged in combination, the moisture adsorption capacity specification must be calculated in proportion of the mix. For example, a mixture of 60% molecular sieve and 40% silica gel, the moisture adsorption capacity would be NLT 16.6% (9.0% + 7.6%) when the test condition is 40% ± 5% RH and 25 ± 2° and the moisture adsorption capacities taken at their minimum specification.

Calculation

Molecular sieve: 60% by weight × 15% moisture adsorption capacity = NLT 9.0% moisture adsorption capacity

Silica gel: 40% by weight × 19% moisture adsorption capacity = NLT 7.6% moisture adsorption capacity

• **CALCIUM CHLORIDE, ANHYDROUS**

Identification—calcium: Passes tests

Identification—chloride: Passes test

Assay: NLT 93.0% and NMT 100.5% of calcium chloride ($CaCl_2$)

Inorganic impurities

Arsenic: NMT 3 ppm

Fluoride: NMT 0.004%

Lead: NMT 5 ppm

Magnesium and alkali salts: NMT 25 mg of residue (NMT 5.0%)

Specific tests

pH ⟨791⟩: 4.5–11.0 (1:20 aqueous solution)

Moisture adsorption capacity: NLT 28% at 80% ± 5% RH and 25 ± 2°

Test methods

Identification—calcium

Sample solution—100 mg/mL: Insoluble oxalate salts are formed when solutions of calcium salts are treated in the following manner. Using 2 drops of methyl red TS as the indicator, neutralize a 1:20 solution of a calcium salt with 6 N

General Chapters

ammonia, then add 2.7 N hydrochloric acid, dropwise, until the solution is acid. A white precipitate of calcium oxalate forms upon the addition of ammonium oxalate TS. This precipitate is insoluble in acetic acid but dissolves in hydrochloric acid.

Identification—chloride

Sample solution—100 mg/mL: Solutions of chlorides yield with silver nitrate TS a white, curdy precipitate that is insoluble in nitric acid but soluble in a slight excess of 6 N ammonia.

Assay

Sample: 1.5 g

Analysis: Transfer the *Sample* into a 250-mL volumetric flask, dissolve it in a mixture of 100 mL of water and 5 mL of 2.7 N hydrochloric acid, dilute with water to volume, and mix. Transfer 50 mL of this solution into a suitable container and add 50 mL of water. While stirring, preferably with a magnetic stirrer, add about 30 mL of 0.05 M disodium EDTA from a 50-mL buret. Then, add 15 mL of 1 N sodium hydroxide and 300 mg of hydroxy naphthol blue indicator. Continue the titration to a blue endpoint. Each mL of 0.05 M disodium EDTA is equivalent to 5.55 mg of calcium chloride ($CaCl_2$).

Arsenic

Sample solution: 1 g in 10 mL

Arsenic trioxide stock solution and **Standard arsenic solution:** Proceed as directed under *Bentonite*.

Analysis: Proceed as directed under *Bentonite*.

Fluoride

Sodium fluoride solution▲—5 µg/mL:▲USP40 Transfer 2.210 g of sodium fluoride, previously dried at 200° for 4 h and accurately weighed, into a 400-mL plastic beaker, add 200 mL of water, and stir until dissolved. Quantitatively transfer this solution into a 1000-mL volumetric flask with the aid of water, dilute with water to volume, and mix. Store this stock solution in a plastic bottle. On the day of use, transfer 5.0 mL of the stock solution into a 1000-mL volumetric flask, dilute with water to volume, and mix.

Calibration curve: Transfer 1.0, 2.0, 3.0, 5.0, 10.0, and 15.0 mL of the *Sodium fluoride solution* into separate 250-mL plastic beakers. Add 50 mL of water, 5 mL of 1 N hydrochloric acid, 10 mL of 1 M sodium citrate, and 10 mL of 0.2 M disodium EDTA to each beaker and mix. Transfer each solution into separate 100-mL volumetric flasks, dilute with water to volume, and mix. Transfer a 50-mL portion of each solution into separate 125-mL plastic beakers, and measure the potential of each solution with a suitable ion-selective electrode apparatus (such as the Orion Model No. 94–09, with solid-state membrane), using a suitable reference electrode (such as the Orion Model No. 90–01, with single junction). Plot the calibration curve on two-cycle semi-logarithmic paper (such as K & E No. 465130) or with the use of a suitable graphing calculator or spreadsheet program, with µg of F per 100 mL solution on the logarithmic scale.

Analysis: Transfer 1.00 g of sample into a 150-mL glass beaker, add 10 mL of water, and, while stirring continuously, slowly add 20 mL of 1 N hydrochloric acid to dissolve the sample. Boil rapidly for 1 min, then transfer into a 250-mL plastic beaker, and cool rapidly in ice water. Add 15 mL of 1 M sodium citrate and 10 mL of 0.2 M disodium EDTA, and mix. Adjust the pH to 5.5 ± 0.1 with 1 N hydrochloric acid or 1 N sodium hydroxide, if necessary. Transfer into a 100-mL volumetric flask, dilute with water to volume, and mix. Transfer a 50-mL portion of this solution into a 125-mL plastic beaker, and measure the potential of the solution with the apparatus described under *Calibration curve*. Determine the fluoride content, in µg, of the sample from the *Calibration curve*. Determine the percentage of fluoride in the sample taken:

$$Result = (C/WS) \times F \times 100$$

C = content of fluoride (µg)
WS = sample weight (g)
F = factor converting µg to g, 0.000001

Lead

Sample solution: 1 g in 20 mL

Lead nitrate stock solution and **Standard lead solution:** Proceed as directed under *Bentonite*.

Analysis: Proceed as directed under *Bentonite*.

Magnesium and alkali salts

Sample: 1 g

Analysis: Dissolve the *Sample* in 50 mL of water, add 500 mg of ammonium chloride, mix, and boil for 1 min. Rapidly add 40 mL of oxalic acid TS and stir vigorously until precipitation is well established. Immediately add 2 drops of methyl red TS. Then add 6 N ammonium hydroxide, dropwise, until the mixture is just alkaline, and cool. Transfer the mixture to a 100-mL cylinder, dilute with water to 100 mL, and let it stand for 4 h or overnight. Decant the clear, supernatant liquid through a dry filter paper, and transfer 50 mL of the clear filtrate to a platinum dish. Add 0.5 mL of sulfuric acid to the dish and evaporate the mixture on a steam bath to a small volume. Carefully evaporate the remaining liquid to dryness over a free flame and continue heating until the ammonium salts have been completely decomposed and volatilized. Finally, ignite the residue to constant weight.

Moisture adsorption capacity: Proceed as directed under *Bentonite*.

- **CALCIUM OXIDE**

Identification—calcium: Passes tests
Assay: NLT 95.0% and NMT 100.5% of calcium oxide (CaO), on the ignited basis
Inorganic impurities
Acid-insoluble substances: NMT 1%
Arsenic: NMT 3 ppm
Fluoride: NMT 0.015%
Lead: NMT 2 mg/kg
Magnesium and alkali salts: NMT 3.6%
Specific tests
Loss on ignition: NMT 10.0%
Moisture adsorption capacity: NLT 28% at 80% ± 5% RH and 25 ± 2°
Test methods
Identification—calcium
Sample solution: Shake 1 g of sample with 20 mL of water and add glacial acetic acid until the sample is dissolved.
Analysis: Proceed as directed under *Calcium Chloride, Anhydrous.*
Assay
Sample: 1 g of sample ignited to a constant weight (see *Loss on ignition* below)
Analysis: Dissolve the *Sample* in 20 mL of 2.7 N hydrochloric acid. Cool the solution, dilute with water to 500.0 mL, and mix. Pipet 50.0 mL of this solution into a suitable container, and add 50 mL of water. While stirring, preferably with a magnetic stirrer, add about 30 mL of 0.05 M disodium EDTA from a 50-mL buret. Then, add 15 mL of 1 N sodium hydroxide and 300 mg of hydroxy naphthol blue indicator. Continue the titration with disodium EDTA to a blue endpoint. Each mL of 0.05 M disodium EDTA is equivalent to 2.804 mg of calcium oxide (CaO).
Arsenic
Sample solution: 1 g in 15 mL of 2.7 N hydrochloric acid
Arsenic trioxide stock solution and **Standard arsenic solution:** Proceed as directed under *Bentonite.*
Analysis: Proceed as directed under *Bentonite.*
Fluoride
Sample: 1.0 g
Analysis: Proceed as directed under *Calcium Chloride, Anhydrous.*
Lead
Sample solution: 1 g in 15 mL of 2.7 N hydrochloric acid
Lead nitrate stock solution and **Standard lead solution:** Proceed as directed under *Bentonite.*
Analysis: Proceed as directed under *Bentonite.*
Acid-insoluble substances
Sample solution: Shake 5 g of sample, and then mix it with 100 mL of water and sufficient hydrochloric acid, added dropwise, to dissolve it.
Analysis: Boil the *Sample solution*, cool, add hydrochloric acid, if necessary, to make the solution distinctly acid, and pass through a tared glass filter crucible. Wash the residue with water until free of chlorides, dry at 105° for 1 h, cool, and weigh.
Magnesium and alkali salts
Sample: 500 mg
Analysis: Dissolve the *Sample* in 30 mL of water and 15 mL of 2.7 N hydrochloric acid. Heat the solution, boil for 1 min, and rapidly add 40 mL of oxalic acid TS, and stir vigorously. Add 2 drops of methyl red TS, and neutralize the solution with 6 N ammonium hydroxide to precipitate the calcium completely. Heat the mixture on a steam bath for 1 h and allow it to cool. Dilute the mixture with water to 100 mL, mix well, and filter. Add 0.5 mL of sulfuric acid to 50 mL of the filtrate. Then evaporate to dryness and ignite to constant weight in a tared platinum crucible at 800 ± 25°.
Loss on ignition
Sample: 1 g
Analysis: Ignite the *Sample* to constant weight in a tared platinum crucible at 1100 ± 50°.
Moisture adsorption capacity: Proceed as directed under *Bentonite.*

- **MOLECULAR SIEVES**

Molecular sieves are synthetic porous crystalline alkali-metal aluminosilicates in a beaded form with a tightly controlled pore size. The most commonly used molecular sieves for desiccants are described as types 3A, 4A, 5A, and 13X with a pore size range of approximately 3–10 Å.
Identification A: The drop of water becomes turbid.
Identification B: Passes tests
Inorganic impurities
Lead: NMT 5 ppm
Specific tests
pH ⟨791⟩: 6.5–12 (200 mg/mL in carbon dioxide-free water)

General Chapters

Loss on Drying 〈731〉: Dry a 5–10 g sample at 575 ± 25° to a constant weight: it loses NMT 4.5%. [Note—Conduct assay immediately after opening the original container.]

Moisture adsorption capacity

NLT 15.0% weight at 40% ± 5% RH and 25 ± 2°

NLT 16.5% weight at 80% ± 5% RH and 25 ± 2°

Test methods

Identification A

Sample: 500 mg

Analysis: Mix the *Sample* with 2.5 g of anhydrous potassium carbonate, and heat the mixture in a platinum or nickel crucible until it melts completely. Cool, add 5 mL of water, and allow to stand for 3 min. Heat the bottom of the crucible gently, detach the melt, and transfer it into a beaker with the aid of about 50 mL of water. Gradually add hydrochloric acid until no effervescence is observed, add 10 mL more of the acid, and evaporate to dryness on a steam bath. Cool, add 20 mL of water, boil, and pass through ash-free filter paper. An insoluble residue of silica remains. [Note—Retain the filtrate for *Identification B*.] Transfer the gelatinous residue to a platinum dish, and cautiously add 5 mL of hydrofluoric acid. [**Caution**—Handle hydrofluoric acid in a fume hood with appropriate precautions.] The precipitate dissolves. (If it does not dissolve, repeat the treatment with hydrofluoric acid.) Heat the solution and introduce a glass stirring rod with a drop of water on the tip into the resulting vapors.

Identification B—aluminum

Sample: Use 2 portions of the filtrate obtained in *Identification A*.

Analysis: Solution of a first portion of the filtrate obtained in *Identification A* yields a white, gelatinous precipitate with 6 N ammonia that is insoluble in an excess of this reagent. Solution of a second portion of the filtrate obtained in *Identification A* yields a white precipitate with a 1 N sodium hydroxide that is dissolved in an excess of this reagent.

Lead

Sample solution: Transfer 10.0 g of sample into a 250-mL beaker, add 50 mL of 0.5 N hydrochloric acid, cover with a watch glass, and heat slowly to boiling. Boil gently for 15 min, cool, and let the undissolved material settle. Decant the supernatant liquid through Whatman No. 4, or equivalent, filter paper into a 100-mL volumetric flask, retaining as much as possible of the insoluble material in the beaker. Wash the slurry and beaker with three 10-mL portions of hot water, decanting each washing through the filter into the flask. Finally, wash the filter paper with 15 mL of hot water, cool the filtrate to room temperature, dilute with water to volume, and mix.

Lead nitrate stock solution and **Standard lead solution:** Proceed as directed under *Bentonite*.

Analysis: Proceed as directed under *Bentonite*.

Moisture adsorption capacity: Proceed as directed under *Bentonite*.

• **Silica Gel**

Silica gel is silicon dioxide ($SiO_2 \cdot H_2O$) that has been manufactured by the addition of sodium silicate solution to a mineral acid to produce a gelatinous precipitate that is washed, then dehydrated to produce colorless silica gel in a bead, granular, or micronized form in a range of mesh sizes.

Appearance: A white or translucent bead or granule

Identification A: A deep yellow color is produced.

Identification B: A green-blue spot develops.

Assay: NLT 94.0% of silicon dioxide (SiO_2) on the ignited basis

Inorganic impurities

Lead: NMT 5 ppm

Soluble ionizable salts (as $NaSO_3$): The conductance produced by the sample is NMT that produced by the control solution (equivalent to NMT 5.0%).

Specific tests

pH 〈791〉: 4–8 in a slurry (1 in 20)

Loss on Drying 〈731〉: Dry a 5–10-g sample at 145° for 3 h: it loses NMT 3.0% of its weight. [Note—Conduct assay immediately after opening the original container.]

Moisture adsorption capacity

NLT 19% wt at 40% ± 5% RH and 25 ± 2°

NLT 27% wt at 80% ± 5% RH and 25 ± 2°

Test methods

Identification A

Sample: 5 mg

Analysis: Place into a platinum crucible, mix with 200 mg of anhydrous potassium carbonate, and ignite over a burner at a red heat for about 10 min. Cool, dissolve the melt in 2 mL of freshly distilled water, warming if necessary, and slowly add 2 mL of ammonium molybdate TS.

Identification B—aluminum

Sample: Solution remaining from *Identification A*

Analysis: Place 1 drop of the *Sample* from *Identification A* on a filter paper, and evaporate the solvent. Add 1 drop of a saturated solution of *o*-tolidine in glacial acetic acid, and place the paper over ammonium hydroxide. [NOTE—Avoid contact with *o*-tolidine when performing this test, and conduct the test in a well-ventilated hood.]

Assay

Sample: 1 g, previously dried

Analysis: Transfer the *Sample* into a tared platinum crucible, ignite at 1000 ± 25° to constant weight, cool in a desiccator, and weigh to obtain the ignited sample weight (*W1*). Moisten the residue with a few drops of alcohol, add 3 drops of sulfuric acid, then add enough hydrofluoric acid to cover the wetted sample. [**CAUTION**—Handle hydrofluoric acid in a well-ventilated fume hood with appropriate precautions.] Evaporate to dryness on a hot plate, using medium heat (95°–105°), then add a few mL of hydrofluoric acid enough to cover the *Sample*, swirl the dish carefully to wash down the sides, and again evaporate to dryness taking care that the *Sample* does not spatter as dryness is approached. Heat the crucible to a red heat using a Meker burner, a propane torch, or in a muffle furnace. Ignite the residue at 1000 ± 25° for 30 min, cool in a desiccator, and weigh to obtain the final weight (*W2*). If a residue remains, repeat the *Analysis* beginning with the addition of hydrofluoric acid until a constant weight is obtained. The difference between the ignited sample weight and the final weight (*W1* − *W2*) represents the weight, in g, of silicon dioxide (SiO_2) in the initially ignited sample. Express the result as a percentage of the initially ignited basis.

Lead

Sample solution: Transfer 5.0 g of sample into a 250-mL beaker, add 50 mL of 0.5 N hydrochloric acid, cover with a watch glass, and slowly heat to boiling. Boil gently for 15 min, cool, and let the undissolved material settle. Decant the supernatant liquid through a Whatman No. 3, or equivalent, filter paper into a 100-mL volumetric flask, retaining as much as possible of the insoluble material in the beaker. Wash the slurry and beaker with three 10-mL portions of hot water, decanting each washing through the filter into the flask. Finally, wash the filter paper with 15 mL of hot water, cool the filtrate to room temperature, dilute with water to volume, and mix.

Lead nitrate stock solution and **Standard lead solution:** Proceed as directed under *Bentonite.*

Analysis: Proceed as directed under *Bentonite.*

Soluble ionizable salts (as Na_2SO_4)

Sample: 5 g, previously dried

Control solution: 1 mg/mL of anhydrous sodium sulfate, made to 250 mL

Analysis: Stir the *Sample* with 150 mL of water for at least 5 min in a high-speed mixer. Filter with the aid of suction, and wash the mixer and filter with 100 mL of water in divided portions, adding the washings to the filtrate. Dilute the filtrate with water to 250 mL. Determine the conductances of the diluted filtrate and of the *Control solution* with a suitable conductance bridge assembly.

Moisture adsorption capacity: Proceed as directed under *Bentonite.*

Reagents—test solutions

Ammonium molybdate TS: Dissolve 6.5 g of finely powdered molybdic acid in a mixture of 14 mL of water and 14.5 mL of ammonium hydroxide. Cool the solution, and add it slowly, with stirring, to a well-cooled mixture of 32 mL of nitric acid and 40 mL of water. Allow to stand for 48 h, and filter through a fine-porosity, sintered-glass crucible. This solution deteriorates upon standing and is unsuitable for use if, upon the addition of 2 mL of dibasic sodium phosphate TS to 5 mL of the solution, an abundant yellow precipitate does not form at once or after slight warming. Store it in the dark. If a precipitate forms during storage, use only the clear supernatant.

Oxalic acid TS: Dissolve 6.3 g of oxalic acid in water to make 100 mL.

⟨671⟩ CONTAINERS—PERFORMANCE TESTING

INTRODUCTION

It is the purpose of this chapter to provide standards for the functional properties of packaging systems used for solid oral dosage forms (SODF) and liquid oral dosage forms (LODF) for pharmaceuticals and dietary supplements. Definitions that apply to this chapter are provided in *Packaging and Storage Requirements* ⟨659⟩. The tests that follow are provided to determine the moisture vapor transmission rate (water vapor permeation rate) and spectral transmission of plastic containers.

Test methods are provided to measure moisture vapor transmission rates that may be useful for pharmaceutical and dietary supplement manufacturers to determine the level of barrier protection provided by packaging systems for SODF. Additional methods are provided to determine classification of packaging systems for SODF and LODF that are repackaged by organizations or when being dispensed on prescription by pharmacists as single-unit and multiple-unit containers (*Table 1*). There may be additional packaging systems where the test methods in this section could be applied; however, any deviation should be described. If other methods are used to measure moisture vapor transmission rate, these methods should be described in sufficient detail to justify their use.

Table 1. Moisture Vapor Transmission Test Methods for Packaging Systems

	Solid Oral Dosage Forms			Liquid Oral Dosage Forms
Section Title	Barrier Protection Determination	Classification for Multiple-Unit Containers	Classification for Single-Unit Containers and Unit-Dose Containers	Classification for Multiple-Unit Containers and Unit-Dose Containers
Application	Multiple-unit containers with seal intact or broached state and single-unit or unit dose containers	Multiple-unit containers with closure applied and seal intact or broached state	Single-unit and unit-dose containers in sealed state	Multiple- and single-unit containers
Users	Manufacturers	Manufacturers Packagers Repackagers Pharmacies	Manufacturers Packagers Repackagers Pharmacies	Manufacturers Packagers Repackagers Pharmacies

Change to read:

MOISTURE VAPOR TRANSMISSION

Barrier Protection Determination for Packaging Systems for Solid Oral Dosage Forms

This section describes moisture vapor transmission test methods for multiple-unit containers (*Method 1*), high barrier single-unit and unit-dose containers (*Method 2*), and low barrier single-unit and unit-dose containers (*Method 3*) used by pharmaceutical manufacturers to package SODF. The purpose of this test method is to obtain reliable and specific moisture vapor transmission rates that can be used to discriminate among barrier performance of packaging systems used for regulated articles; the method is based upon ASTM method D7709.[1]

This method contains the following attributes:

a. Reports a specific moisture vapor transmission value for a container rather than a classification

b. Provides sufficient sensitivity and precision to allow differentiation among moisture barrier performance for containers

c. Conditions used for testing these packaging systems are the same as those used for accelerated stability testing of the primary packaging of regulated articles (typically 40°/75% RH).

EQUIPMENT

The following items should be available:

- A balance for weighing the test specimens that has sufficient capacity to weigh the test specimens throughout the period of the test (see *Weighing on an Analytical Balance* 〈1251〉). The balance shall have sensitivity adequate to measure small differences in weight from one time point to the next. The weighing uncertainty shall be smaller than 5% of the weight gain from one time point to the next. The weighing uncertainty is typically three times the balance resolution/sensitivity. As an example, a balance with a resolution of 0.1 mg is acceptable for packaging systems whose weight gain per time interval is more than or equal to 6 mg [(0.1 × 3)/5%], which is 60 times the balance sensitivity.
- A chamber capable of maintaining 40 ± 2° and 75 ± 5% RH.

DESICCANT

Method 1: The desiccant is anhydrous calcium chloride in granular form. Other desiccants, such as a molecular sieve or silica gel, may be suitable. If anhydrous calcium chloride is used, pre-dry at 215 ± 5° for 7¼ ± ¼ h to ensure that any hexahydrate present is fully converted to the anhydrate. Cool the desiccant in a desiccator for at least 2 h before use.

Methods 2 and 3: The desiccant is silica gel molded in a form to fit the size and shape of the blister cavity used. Other desiccants may be suitable, for example, a molecular sieve. If silica gel is used, pre-dry in a circulating hot air oven at one of two conditions: 155 ± 5° for 3¼ ± ¼ h or 150 ± 5° for 4¼ ± ¼ h. If a molecular sieve is used, pre-dry in a muffle furnace at 595 ± 25°. Dry the 4A and 3A sieves for 3¼ ± ¼ h; dry the 13X sieve for 5¼ ± ¼ h. Cool the desiccant in a desiccator for at least 2 h before use. [Note—It has been shown[2] that anhydrous calcium chloride may contain calcium hexahydrate, which loses water only when the temperature reaches 200°.]

---

1 ASTM D7709. Standard Test Methods for Measuring Water Vapor Transmission Rate (WVTR) of Pharmaceutical Bottles and Blisters published by ASTM International, 100 Barr Harbor Drive, P.O. Box C700, West Conshohocken, PA 19428-2959.

2 Determination of water vapor transmission rate (WVTR) of HDPE bottles for pharmaceutical products. Chen, Yisheng and Yanxia Li, International Journal of Pharmaceutics, 358 (2008) 137–143.

General Chapters

PROCEDURE

Method 1: Use 15 multiple-unit containers and 15 closures representative of the system to be tested. Prepare the test specimens by filling each multiple-unit container two-thirds with desiccant then, for screw type closures, apply the closure using the torque that is within the range of tightness specified in *Table 2*. For other closure types, apply according to the intended method. Ensure that a proper seal has been made with the intended membrane to the land area of the bottle finish. Identify each multiple-unit container with indelible ink. Do not use a label. If there is a need to increase the precision of the method, the user can test the system without the closure as long as an impervious seal remains on the container.

If desired, weigh each multiple-unit container at ambient temperature and RH. Record this weight for time zero, but do not use it in the calculation of permeation. Place all containers in the test chamber (40°/75% RH) within 1 h of weighing. Weigh all multiple-unit containers at time intervals of 7 days ± 1 h. Weigh the multiple-unit containers at 7, 14, 21, 28, and 35 days to get steady-state data points. (The time interval from time 0 to day 7 is the period of equilibration.) Prior to weighing at each time interval, equilibrate the containers for about 30 min at the weighing temperature and RH. Limit the time out of the chamber to less than 2 h. Record the weights in an appropriate manner for later computation of the regression line.

Table 2. Torque Applicable to Screw-Type Container

Closure Diameter[a] (mm)	Suggested Tightness Range with Manually Applied Torque[b] (inch-pounds)	Suggested Tightness Range with Manually Applied Torque[b] (Newton-meters)
8	5	0.56
10	6	0.68
13	8	0.90
15	5–9	0.56–1.02
18	7–10	0.79–1.13
20	8–12	0.90–1.36
22	9–14	1.02–1.58
24	10–18	1.13–2.03
28	12–21	1.36–2.37
30	13–23	1.47–2.60
33	15–25	1.69–2.82
38	17–26	1.92–2.94
43	17–27	1.92–3.05
48	19–30	2.15–3.39
53	21–36	2.37–4.07
58	23–40	2.60–4.52
63	25–43	2.82–4.86
66	26–45	2.94–5.08
70	28–50	3.16–5.65
83	32–65	3.62–7.35
86	40–65	4.52–7.35
89	40–70	4.52–7.91
100	45–70	5.09–7.91
110	45–70	5.09–7.91
120	55–95	6.22–10.74
132	60–95	6.78–10.74

[a] The torque designated for the next larger closure diameter is to be applied in testing containers having a closure diameter intermediate to the diameters listed.
[b] A suitable apparatus is available from SecurePak, PO Box 905, Maumee, Ohio 43552-0905; www.secure-pak.com. MRA Model with indicators on both the removal and application sides available in the following ranges: 1) 0–25 inch lbs., read in 1-inch lb. increments, 2) 0–50 inch lbs., read in 2-inch lb. increments, and 3) 0–100 inch lbs., read in 5-inch lb. increments. For further detail regarding instructions, reference may be made to "Standard Test Method for Application and Removal Torque of Threaded or Lug-Style Closures" ASTM Method D3198, published by the ASTM International, 100 Barr Harbor Drive, P.O. Box C700, West Conshohocken, PA 19428-2959.

Method 2: Use 10 test units for this method. Provide a minimum of 10 blister cavities for each test unit. If the card contains less than 10 cavities, bundle the cards to form a single test unit of at least 10 cavities. This is required to provide sufficient weight gain at each time interval. Fill with pre-dried desiccant, and seal the blisters on equipment that is capable of correctly filling and sealing the blister. The desiccant should fill the cavity. The total weight of desiccant shall be sufficient to meet the quantity required to avoid partial saturation of the desiccant before completion of the test. Fill the blisters in a low-humidity atmosphere (as low as possible, but not greater than 50% RH). Do not expose the desiccants to room humidity for more than

30 min before sealing. Identify each test specimen with indelible ink; do not use a label. A test unit will be one or more test specimens. Bundle test speciments into test units.

Weigh each test unit at ambient temperature and RH. Record this weight for time zero. Place all test units in the test chamber (40°/75% RH) within 1 h of weighing. Weigh all test units at time intervals of 7 days ±1 h. Weigh the test units at 7, 14, 21, 28, and 35 days to get 5 steady-state data points. (The time interval from time 0 to day 7 is the period of equilibration.) Prior to weighing at each time interval, equilibrate the containers for 30 ± 5 min at the controlled weighing temperature and RH. Limit the time out of the chamber to less than 2 h. Record the weights in an appropriate manner for later computation of the regression line.

Ultra-high barrier blisters may not show the full measure of precision and sensitivity this method can provide. For ultra-high barrier blisters, test units should have more than 10 cavities, but NMT 30 cavities. Examples are foil-foil blisters or very small blisters formed from other materials. An alternative approach is to double or triple the length of weighing intervals to achieve at least a 6-mg weight gain per time interval by the test specimen.

Method 3: Prepare the test units as directed for *Method 2*. Place all test units in the test chamber (40°/75% RH) within 1 h of weighing. Weigh the test units at the end of 2 days (48 ± 1 h). At this time, the difference in weight (the weight gain) is divided by the number of blisters and days (2) in each test unit and this is taken as the moisture vapor transmission rate in mg/blister/day. The number of blisters tested depends on the barrier characteristics of the material, the size of the blister, and the sensitivity of the balance used in the test. For this method, the requirement of five consecutive weighings is waived because the desiccant quickly becomes saturated when packed in a low-barrier package and stored at 40°/75% RH. [NOTEFor single-unit and unit-dose low barrier containers, the weight gain after the second day displays a curvilinear profile typical of approaching saturation of the desiccant. To obtain five weighings within 2 days is not viable and is likely to increase variability. *Methods 2* and *3* may require that the blister cards be bundled in multiples to achieve periodic weight gains of sufficient magnitude to use the balance sensitivity. When bundled, these cards or test specimens are called test units. The weight gain in each weighing period shall be 20 times the sensitivity of the balance, and the balance sensitivity is 3 times the balance precision. In other words, the minimal weight gain per time interval should be at least 60 times the balance precision.]

CALCULATIONS

For *Methods 1* and *2*, perform the regression analysis for each test unit. Typically, the initial data point (at day 0) is not included in fitting the regression line. The slope of the regression line is the moisture vapor transmission rate of each test unit. For *Method 1*, the slope is the moisture vapor transmission rate for the corresponding multiple-unit container. For *Method 2*, the moisture vapor transmission rate of each blister cavity is calculated by dividing the slope by the number of cavities in each test unit.

For *Method 3*, calculate the weight gain in mg/day from day 0 to day 2 using the 10 test units. The moisture vapor transmission rate of each blister is calculated by dividing the weight gain by 2 (for 2 days) and the number of blisters in each test unit.

Regression Equation:

$$W = I + MT$$

Calculations:

$$Slope(M) = \sum_{i=1}^{N}[(W_i - \overline{W})(T_i - \overline{T})] / \sum_{i=1}^{N}(T_i - \overline{T})^2$$

$$\text{Intercept } (I) = \overline{W} - M\overline{T}$$

where

M = regression line slope
N = number of data points (each point consists of a weight and a time)
W = measured weight
$\overline{W}$ = overall weight mean
T = time point
$\overline{T}$ = overall time point mean
I = regression line intercept (point where regression line intersects the vertical axis)

$$\sum_{i=1}^{N}[(W_i - \overline{W})(T_i - \overline{T})]$$

equals sum of cross-products (for example, for each of the N data points, subtract the overall weight mean from the weight value and the overall time mean from the time value and multiply the two differences to get a cross-product. Then sum all N cross-products).

$$\sum_{i=1}^{N}(T-\overline{T})^2$$

equals sum of squared deviations (for example, for each of the N data points, subtract the overall mean time from the time value and square the difference. Then sum all N squared differences).

RESULTS

Method 1: Report the moisture vapor transmission rate as the average value, in mg/day per container, and the standard deviation of the 15 slopes. Properly describe the container closure system tested.

Method 2: Report the moisture vapor transmission rate as the average value, in mg/day per cavity, and the standard deviation of the 10 test unit slopes. Properly describe the container closure system tested.

Method 3: Report the moisture vapor transmission rate as the average value from day 0 to day 2, in mg/day per blister, and the standard deviation of the 10 test unit slopes. Properly describe the container closure system tested.

Packaging System Classification for Multiple-Unit Containers for Solid Oral Dosage Forms

The following procedure and classification scheme is provided to evaluate the moisture vapor transmission characteristics of multiple-unit containers. The information gathered should be used to make an informed judgment regarding the suitability of the packaging system for SODF.

DESICCANT

Place a quantity of 4- to 8-mesh, anhydrous calcium chloride[3] in a shallow container, taking care to exclude any fine powder, dry at 110° for 1 h, and cool in a desiccator.

PROCEDURE

Select 12 containers of a uniform size and type, clean the sealing surfaces with a lint-free cloth, and close and open each container 30 times. Apply the closure firmly and uniformly each time the container is closed. Close screw-capped containers with a torque that is within the range of tightness specified in *Table 2*. Add *Desiccant* to 10 of the containers, designated *test containers*, filling each to within 13 mm of the closure if the container volume is 20 mL or more, or filling each to two-thirds of capacity if the container volume is less than 20 mL. If the interior of the container is more than 63 mm in depth, an inert filler or spacer may be placed in the bottom to minimize the total weight of the container and *Desiccant*; the layer of *Desiccant* in such a container shall be not less than 5 cm in depth. Close each container immediately after adding *Desiccant*, applying the torque designated in *Table 2* when closing screw-capped containers. To each of the remaining two containers, designated *controls*, add a sufficient number of glass beads to attain a weight approximately equal to that of each of the *test containers*, and close, applying the torque designated in *Table 2* when closing screw-capped containers. Record the weight of the individual containers to the nearest 0.1 mg if the container volume is less than 20 mL; to the nearest mg if the container volume is 20 mL or more but less than 200 mL; or to the nearest centigram (10 mg) if the container volume is 200 mL or more; and store at 75 ± 3% RH and a temperature of 23 ± 2°. [Note—A saturated system of 35 g of sodium chloride with each 100 mL of water placed in the bottom of a desiccator maintains the specified humidity. Other methods may be employed to maintain these conditions.] After 336 ± 1 h (14 days), record the weight of the individual containers in the same manner. Completely fill five empty containers of the same size and type as the containers under test with water or a noncompressible, free-flowing solid, such as well-tamped fine glass beads, to the level indicated by the closure surface when in place. Transfer the contents of each to a graduated cylinder, and determine the average container volume, in mL. Calculate the rate of moisture vapor transmission, in mg/day/L:

$$(1000/14V)[(T_F - T_I) - (C_F - C_I)]$$

V = volume of the container (mL)
T_F = final weight of each *test container* (mg)
T_I = initial weight of each *test container* (mg)
C_F = average final weight of the two *controls* (mg)
C_I = average initial weight of the two *controls* (mg)

Classification: Packaging systems are *tight* if NMT 1 of the 10 *test containers* exceeds 100 mg/day/L in moisture vapor transmission, and none exceeds 200 mg/day/L. Packaging systems are *well-closed* if NMT 1 of the 10 *test containers* exceeds 2000 mg/day/L in moisture vapor transmission, and none exceeds 3000 mg/day/L.

[3] Suitable 4- to 8-mesh, anhydrous calcium chloride is available commercially as Item JT1313-1 from VWR International (www.vwr.com; telephone 1-800-952-5000).

POLYETHYLENE AND POLYPROPYLENE CONTAINERS

Fit the containers with impervious seals obtained by heat-sealing the bottles with an aluminum foil–polyethylene laminate or other suitable seal.[4] Test as directed in the *Procedure* section.

Classification: High-density polyethylene containers meet the requirements if the moisture vapor transmission exceeds 10 mg/day/L in NMT 1 of the 10 test containers and exceeds 25 mg/day/L in none of them. Low-density polyethylene containers meet the requirements if the moisture vapor transmission exceeds 20 mg/day/L in NMT 1 of the 10 test containers and exceeds 30 mg/day /L in none of them.

Polypropylene containers meet the requirements if the moisture vapor transmission exceeds 15 mg/day/L in NMT 1 of the 10 test containers and exceeds 25 mg/day/L in none of them.

Packaging System Classification for Single-Unit Containers and Unit-Dose Containers for Solid Oral Dosage Forms

The following procedure and classification scheme are provided to evaluate the moisture vapor transmission characteristics of single-unit containers and unit-dose containers. The information gathered should be used to make an informed judgment regarding the suitability of the packaging system for SODF.

DESICCANT

Dry suitable desiccant pellets[5] at 110° for 1 h prior to use, and cool in a desiccator. Use pellets weighing approximately 400 mg each and having a diameter of approximately 8 mm. [Note—If necessary because of limited unit-dose container size, pellets weighing less than 400 mg each and having a diameter of less than 8 mm may be used.]

PROCEDURE

Method 1: Seal NLT 10 unit-dose containers with one pellet in each, and seal 10 additional, empty unit-dose containers to provide the controls, using finger cots or padded forceps to handle the sealed containers. Number the containers, and record the individual weights[6] to the nearest mg. Weigh the controls as a unit, and divide the total weight by the number of controls to obtain the average. Store all of the containers at 75 ± 3% RH and at a temperature of 23 ± 2°. [Note—A saturated system of 35 g of sodium chloride with each 100 mL of water placed in the bottom of a desiccator maintains the specified humidity. Other methods may be employed to maintain these conditions.] After a 24-h interval, and at each multiple thereof (see *Classification*), remove the containers from the chamber, and allow them to equilibrate for 15 to 60 min in the weighing area. Again, record the weight of the individual containers and the combined controls in the same manner. [Note—If any indicating pellets turn pink during this procedure, or if the pellet weight increase exceeds 10%, terminate the test, and regard only earlier determinations as valid.] Return the containers to the humidity chamber. Calculate, to two significant figures, the rate of moisture vapor transmission, in mg/day, of each container taken:

$$(1/N)[(W_F - W_I) - (C_F - C_I)]$$

N = number of days expired in the test period (beginning after the initial 24-h equilibration period)
W_F = final weight of each test container (mg)
W_I = initial weight of each test container (mg)
C_F = average final weight of the controls (mg)
C_I = average inital weight of the controls (mg)

[Note—Where the moisture vapor transmission rates measured are less than 5 mg/day, and where the controls are observed to reach equilibrium within 7 days, the individual moisture vapor transmission rates may be determined more accurately by using the 7-day test container and control container weights as W_I and C_I, respectively, in the calculation. In this case, a suitable test interval for *Class A* (see *Classification*) would be NLT 28 days following the initial 7-day equilibration period (a total of 35 days).]

Method 2: Use this procedure for packs (e.g., punch-out cards) that incorporate a number of separately sealed unit-dose containers or blisters. Seal a sufficient number of packs, such that NLT four packs and a total of NLT 10 unit-dose containers or blisters filled with one pellet in each unit are tested. Seal a corresponding number of empty packs, each pack containing the same number of unit-dose containers or blisters as used in the test packs, to provide the controls. Store all of the containers at

---

[4] A suitable laminate for sealing has, as the container layer, polyethylene of NLT 0.025 mm (0.001 in) and a second layer of aluminum foil of NLT 0.018 mm (0.0007 in), with additional layers of suitable backing materials. A suitable seal can also be obtained by using glass plates and a sealing wax consisting of 60% of refined amorphous wax and 40% of refined crystalline paraffin wax.

[5] Suitable moisture-indicating desiccant pellets are available commercially from sources such as Unit Dose Supply, P.O. Box 104, Ringoes, NJ 08551-0104 (www.unitdose.net; telephone 609-310-1456), as Indicating Desiccant Pellets, Item No. TK-1002.

[6] Accurate comparisons of *Class A* containers may require test periods in excess of 28 days if weighings are performed on a *Class A* prescription balance (see ●*Prescription Balances and Volumetric Apparatus Used in Compounding* 〈1176〉● (CN 1-May-2017)). The use of an analytical balance on which weights can be recorded to 4 or 5 decimal places may permit more precise characterization between containers and/or shorter test periods.

75 ± 3% RH and at a temperature of 23 ± 2°. [NOTE—A saturated system of 35 g of sodium chloride with each 100 mL of water placed in the bottom of a desiccator maintains the specified humidity. Other methods may be employed to maintain these conditions.] After 24 h, and at each multiple thereof (see *Classification*), remove the packs from the chamber, and allow them to equilibrate for about 45 min. Record the weights of the individual packs, and return them to the chamber. Weigh the control packs as a unit, and divide the total weight by the number of control packs to obtain the average empty pack weight. [NOTE—If any indicating pellets turn pink during the procedure, or if the average pellet weight increase in any pack exceeds 10%, terminate the test, and regard only earlier determinations as valid.] Calculate, to two significant figures, the average rate of moisture vapor transmission, in mg/day, for each unit-dose container or blister in each pack taken:

$$[1/(N \times X)][(W_F - W_I) - (C_F - C_I)]$$

N = number of days expired in the test period (beginning after the initial 24-h equilibration period)
X = number of separately sealed units per pack
W_F = final weight of each test pack (mg)
W_I = initial weight of each test pack (mg)
C_F = final weight of the control packs (mg)
C_I = initial weight of the control packs (mg

Using the *Desiccant* stated for *Method 1* and *Method 2*, the test and control containers or packs are weighed after every 24 h and after suitable test intervals for the final weighings. W_F and C_F, are as follows: 24 h for *Class D*; 48 h for *Class C*; 7 days for *Class B*; and NLT 28 days for *Class A*.

Classification: The individual unit-dose containers as tested in *Method 1* are designated as follows: *Class A* if not more than 1 of 10 containers tested exceeds 0.5 mg/day in moisture vapor transmission rate and none exceeds 1 mg/day; *Class B* if NMT 1 of 10 containers tested exceeds 5 mg/day and none exceeds 10 mg/day; *Class C* if NMT 1 of 10 containers tested exceeds 20 mg/day and none exceeds 40 mg/day; and *Class D* if the containers tested meet none of the moisture vapor transmission rate requirements.

The packs as tested in *Method 2* are designated as follows: *Class A* if no pack tested exceeds 0.5 mg/day in average blister moisture vapor transmission rate; *Class B* if no pack tested exceeds 5 mg/day in average blister moisture vapor transmission rate; *Class C* if no pack tested exceeds 20 mg/day in average blister moisture vapor transmission rate; and *Class D* if the packs tested meet none of the above average blister moisture vapor transmission rate requirements.

Packaging System Classification for Multiple-Unit Containers and Unit-Dose Containers for Liquid Oral Dosage Forms

The following procedure and classification scheme are provided to evaluate the moisture vapor transmission characteristics of multiple-unit containers. The information gathered should be used to make an informed judgment regarding the suitability of the packaging system for LODF. [NOTE—Determine the weights of individual container–closure systems (bottle, inner seal, if used, and closure) both as tare weights and fill weights, to the nearest 0.1 mg if the bottle capacity is less than 200 mL; to the nearest mg if the bottle capacity is 200 mL or more but less than 1000 mL; or to the nearest centigram (10 mg) if the bottle capacity is 1000 mL or more.]

Procedure

Select 12 bottles of a uniform size and type, and clean the sealing surfaces with a lint-free cloth. Fit each bottle with a seal, closure liner (if applicable), and closure. Number each container–closure system, and record the tare weight.

Remove the closures and, using a pipet, fill 10 bottles with water to the fill capacity. Fill two containers with glass beads, to the same weight as the filled test containers. If using screw closures, apply a torque that is within the range specified in *Table 2*, and store the sealed containers at a temperature of 25 ± 2° and a relative humidity of 40 ± 2%. After 336 ± 1 h (14 days), record the weight of the individual containers, and calculate the water weight loss rate, in percent per year, for each bottle taken:

$$[(W_{1i} - W_T) - (W_{14i} - W_T) - (W_{C1} - W_{C14})] \times 365 \times \bullet 100/(W_{1i} - W_T) \times 14_{\bullet} \text{ (ERR 1-Apr-2016)}$$

W_{1i} = initial weight of each individual bottle (*i*)
W_T = tare weight
W_{14i} = weight of each individual bottle (*i*) at 14 days
W_{C1} = initial weight of the control container at day 1
W_{C14} = weight of the control container at 14 days

Classification: The packaging system meets the requirements for *tight* if the percentage of water weight loss does not exceed 2.5% per year in NMT 1 of the 10 test containers and does not exceed 5.0% per year in any of them.

SPECTRAL TRANSMISSION

Apparatus[7]

Use a spectrophotometer of suitable sensitivity and accuracy, adapted for measuring the amount of light transmitted by plastic materials used for pharmaceutical containers. In addition, the spectrophotometer is capable of measuring and recording light transmitted in diffused as well as parallel rays.

Procedure

Select sections to represent the average wall thickness. Cut circular sections from two or more areas of the container, and trim them as necessary to give segments of a size convenient for mounting in the spectrophotometer. After cutting, wash and dry each specimen, taking care to avoid scratching the surfaces. If the specimen is too small to cover the opening in the specimen holder, mask the uncovered portion of the opening with opaque paper or masking tape, provided that the length of the specimen is greater than that of the slit in the spectrophotometer. Immediately before mounting in the specimen holder, wipe the specimen with lens tissue. Mount the specimen with the aid of a tacky wax, or by other convenient means, taking care to avoid leaving fingerprints or other marks on the surfaces through which light must pass. Place the section in the spectrophotometer with its cylindrical axis parallel to the plane of the slit and approximately centered with respect to the slit. When properly placed, the light beam is normal to the surface of the section, and reflection losses are at a minimum.

Continuously measure the transmittance of the section with reference to air in the spectral region of interest with a recording instrument or at intervals of about 20 nm with a manual instrument, in the region of 290–450 nm.

Limits

The observed spectral transmission does not exceed the limits given in *Table 3* for containers intended for parenteral use. The observed spectral transmission for plastic containers for products intended for oral or topical administration does not exceed 10% at any wavelength in the range 290–450 nm.

Table 3. Limits for Plastic Classes I to VI

Nominal Size (in mL)	Maximum Percentage of Spectral Transmission at Any Wavelength between 290 and 450 nm
1	50
2	45
5	40
10	35
20	30
50	15

[NOTE—Any container of a size intermediate to those listed above exhibits a spectral transmission not greater than that of the next larger size container listed in *Table 3*. For containers larger than 50 mL, the limits for 50 mL apply.]

GLOSSARY

Blister: Formed, lidded, and sealed plastic or foil dome that contains the capsule or tablet (usually a single-unit or unit-dose).

Low-barrier blister: Blisters made from low-barrier materials formed and sealed so that the moisture vapor transmission rate when tested at 40°/75% relative humidity (RH) is greater than 1.0 mg/cavity-day.

High-barrier blister: Blisters made from high-barrier material, formed and sealed so that the moisture vapor transmission rate when tested at 40°/75% RH is less than 1.0 mg/cavity-day.

Ultra-high barrier blister: Blisters made from ultlra high-barrier material, formed and sealed so that the moisture vapor transmission rate when tested at 40°/75% RH is less than 0.01 mg/cavity-day.

Blister card: A contiguous group of blisters formed and sealed with lid in place. The number of blisters per card commonly ranges from one to ten but may be more. The blister card may sometimes be referred to as a packaging system.

Cavity: Formed, lidded, and sealed plastic or foil dome (see *Blister*).

[7] For further details regarding apparatus and procedures, reference may be made to the following publications of ASTM International, 100 Barr Harbor Drive, West Conshohocken, PA 19428-2959: "Standard Test Method of Test for Haze and Luminous Transmittance of Transparent Plastics", ASTM Method D1003-11e1; "Standard Practice for Computing the Colors of Objects by Using the CIE System", ASTM Method E308-08.

Moisture vapor transmission rate: The steady state moisture vapor transmission in unit time through a packaging system, under specific conditions of temperature and humidity. These test methods use gravimetric measurement to determine the rate of weight gain as a result of water vapor transmission into the packaging system and subsequent uptake by a desiccant enclosed within the packaging system.

Test specimen (or specimen): For multiple-unit containers, the bottle is the test specimen; and for single-unit or unit-dose containers, the blister card containing multiple blister cavities is the test specimen. For blisters, more than one card (or specimen) may be grouped into a test unit for conducting the test.

Test unit: For multiple-unit containers, the bottle is the test unit as well as being the test specimen and for single-unit or unit-dose containers, the test unit is a group of test specimens (blister cards) processed together for temperature and humidity exposure and for weighing at each time point. The purpose of the test unit for single-unit or unit-dose containers is to gain the advantage of additive weight gain resulting from more blister cavities than are present on a single card. The *test unit*, when applied to bottles, is used to maintain congruence of naming among the three test methods.

〈691〉 COTTON

Preparatory to the determination of absorbency and of fiber length, remove the Cotton from its wrappings, and condition it for not less than 4 hours in a standard atmosphere of 65 ± 2% relative humidity at 21 ± 1.1° (70 ± 2°F).

ABSORBENCY TEST

Procedure

Prepare a test basket, weighing not more than 3 g, from copper wire approximately 0.4 mm in diameter (No. 26 B. & S.) in the form of a cylinder approximately 5 cm in diameter and 8 cm deep, with spaces of about 2 cm between the wires. Take portions of purified cotton weighing 1 ± 0.05 g from five different parts of the package by pulling, not cutting, the specimens, place the combined portions in the basket, and weigh. Hold the basket on its side approximately 12 mm above the surface of water at 25 ± 1°, and drop it into the water. Determine, preferably by use of a stop watch, the time in seconds required for complete submersion.

Remove the basket from the water, allow it to drain for 10 seconds in the same horizontal position, then place it immediately in a tared, covered vessel, and weigh, deducting the weight of the test basket and of the purified cotton to find the weight of water absorbed.

FIBER LENGTH

For the determination of the length and of the length distribution of cotton fibers in purified cotton use the following method:

Carry out all operations associated with the determination of fiber length of purified cotton in an atmosphere maintained at 65 ± 2% relative humidity at 21 ± 1.1° (70 ± 2°F).

These directions describe the mode of procedure that is well adapted to the sorter* most extensively used in the United States at the present time.

Apparatus

The sorter (see *illustration)*

* [NOTE—The method here described is especially adapted to the Suter-Webb Duplex Cotton Fiber sorting apparatus, but with more or less obvious alteration in procedure, may be carried out with two Baer sorters in tandem arrangement, or with a Johannsen or other similar apparatus.]

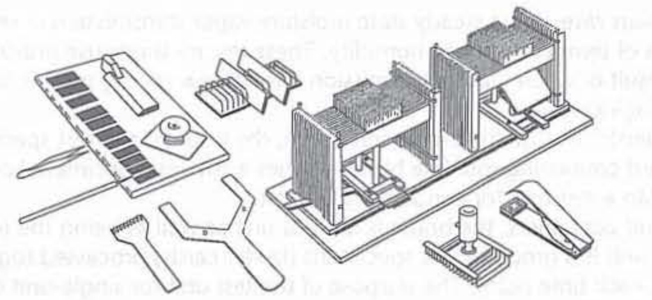

Duplex Cotton Fiber Sorter

consists of two banks of combs rigidly mounted side by side on a common base. Each bank of combs consists of at least 12 individual combs spaced 3.2 mm apart, one behind the other, and mounted in grooves so that as they are approached during the fractionating process and no longer needed, they may be dropped below the working plane. Each individual comb has a single row of accurately aligned and sharply pointed teeth, 12 mm long, consisting of needles 0.38 mm in diameter. The teeth are spaced 62 to 25 mm over an extent of approximately 50 mm.

Accessory equipment consists of fiber-sorter forceps, fiber-depressing grid, fiber-depressing smooth plate, and velvet-covered plates. The sorter forceps consist of two brass pieces approximately 75 mm long, hinged on one end and slightly curved to present a beaked aspect at the gripping end for gripping the protruding fibers close to the surfaces of the combs. Usually, one of the gripping edges has a leather or other fibrous padding. The gripping edge is approximately 19 mm wide.

The fiber-depressing grid consists of a series of brass rods spaced 3.2 mm apart so that they may be placed between the combs to press the fibers down between the teeth. The fiber-depressing smooth plate consists of a polished brass plate approximately 25 × 50 mm, with a knob or handle on the upper surface whereby the plate may be smoothed over the fibers as they are laid on the velvet surface of the array plates. The velvet-covered plates, upon which the fibers may be arrayed, are aluminum sheets approximately 100 mm × 225 mm × 2.4 mm thick, covered on both sides with high-grade velvet, preferably black.

Selection of Cotton

After unrolling the cotton, prepare a representative laboratory test specimen by taking from a package containing from 8 to 16 ounces, 32 pinches (about 75 mg each) well distributed throughout the bulk of the lap, 16 representative pinches being taken from each longitudinal half of the lap. Avoid the cut ends of the lap, and take particular care to secure portions throughout the thickness of the lap. To avoid biased selection of long or short fibers, remove all fibers of the group pinched and do not allow them to slip from between the fingers.

From packages of not more than 4 ounces in weight, take 8 pinches, and from packages weighing more than 4 ounces and not more than 8 ounces, take 16 pinches, all well distributed.

Mix the pinches in pairs promiscuously, and combine each pair by gently drawing and lapping them in the fingers. Then divide each combined pair by splitting longitudinally into two approximately equal parts and utilize one part in the further mixing. (The other part may be discarded or reserved for any further tests or checks.)

Repeat the process described in the preceding paragraph with the successive halves of the bifurcated series until only 1 pinch, the final composite test portion, results. Gently parallel and straighten the fibers of the final composite test portion by drawing and lapping them in the fingers. Take care to retain all of the fibers, including as far as possible those of the neps (specks of entangled fibers) and naps (matted masses of fibers), discarding only motes (immature seed fragments with fibers) and nonfiber foreign material such as stem, leaf, and fragments of seedcoats.

From the final composite portion described in the preceding paragraph, separate longitudinally a test portion of 75 ± 2 mg, accurately weighed. Retain the residue for any check test necessary.

Procedure

With the fiber-depressing grid carefully insert the weighed test portion into one bank of combs of the cotton sorter, so that it extends across the combs at approximately right angles.

With the sorter forceps, grip by the free ends a small portion of the fibers extending through the teeth of the comb nearest to the operator; gently and smoothly draw them forward out of the combs, and transfer them to the tips of the teeth in the second bank of combs, laying them parallel to themselves, straight, and approximately at right angles to the faces of the combs, releasing the gripped ends as near to the face of the front comb as possible. With the depressor grid carefully press the transferred fibers down into the teeth of the combs. Continue the operation until all of the fibers are transferred to the second bank of combs. During this transfer of the fibers, drop the combs of the first bank in succession when and as all of the protruding fibers have been removed.

Turn the machine through 180°, and transfer the cotton fibers back to the *first bank* of combs in the manner described in the preceding paragraph.

Take great care in evening up the ends of the fibers during both of the above transfers, arranging them as closely as possible to the front surface of the proximal comb. Such evening out of the ends of the protruding fibers may involve drawing out straggling fibers from both the front and rear aspects of the banks of combs, and re-depositing them into and over the main bundle in the combs.

Turn the machine again through 180°. Drop successive combs if necessary to expose the ends of the longest fibers. It may be necessary to re-deposit some straggling fibers. With the forceps withdraw the few most protuberant fibers. In this way continue to withdraw successively the remaining protuberant fibers back to the front face of the proximal comb. Drop this comb and repeat the series of operations in the same manner until all of the fibers have been drawn out. In order not to disturb seriously the portion being tested, and thereby vitiate the length fractionation into length groups, make several pulls (as many as 8 to 10) between each pair of combs.

Lay the pulls on the velvet-covered plates alongside each other, as straight as possible, with the ends as clearly defined as possible, and with the distal ends arranged in a straight line, pressing them down gently and smoothly with the fiber-depressing smooth plate before releasing the pull from the forceps. Employ not fewer than 50 and not more than 100 pulls to fractionate the test portion.

Group together all of the fibers measuring 12.5 mm (about 1/2 inch) or more in length, and weigh the group to the nearest 0.3 mg. In the same manner, group together all fibers 6.25 mm (about 1/4 inch) or less in length, and weigh in the same manner. Finally, group the remaining fibers of intermediate lengths together and weigh. The sum of the three weights does not differ from the initial weight of the test portion by more than 3 mg. Divide the weight of each of the first two groups by the weight of the test portion to obtain the percentage by weight of fiber in the two ranges of length.

⟨695⟩ CRYSTALLINITY

This test is provided to determine compliance with the crystallinity requirement where stated in the individual monograph for a drug substance.

PROCEDURE

A detailed test procedure is described under *Optical Microscopy* ⟨776⟩.

⟨696⟩ CHARACTERIZATION OF CRYSTALLINE SOLIDS BY MICROCALORIMETRY AND SOLUTION CALORIMETRY

For the purpose of this chapter, crystalline material, partially crystalline material, and amorphous material are considered as solids.

INTRODUCTION—THE CONCEPT OF CRYSTALLINITY

The perfectly ordered crystal lattice with every molecule in its expected lattice position is an ideal that is seldom, if ever, achieved. The other extreme is the amorphous state, in which a solid contains the maximum possible density of imperfections (defects of various dimensionalities), such that all long-range order is lost while only the short-range order, imposed by its nearest neighbors, remains. Real crystals lie somewhere between these two extremes. A crystal's position on a scale bounded by these two extremes is termed *crystallinity*.

All real crystals, even in the pure state, possess some lattice imperfections or defects, which increase both the energy (enthalpy under conditions of constant atmospheric pressure) and the disorder (expressed as the entropy) of the crystal lattice. A crystal with a relatively low density of imperfections is said to be highly crystalline and to possess a high crystallinity. By contrast, a particle with a relatively high density of imperfections is said to be partially amorphous and to possess a low crystallinity. In ideal terms, a totally amorphous particle corresponds to zero crystallinity. Amorphous particles may contain somewhat ordered domains that can act as nuclei for crystallization; such so-called amorphous particles are said to possess a low-level, but finite, crystallinity.

The ability to detect and quantify the amount of amorphous material within a highly crystalline substance is of great importance during the development and subsequent manufacture of a pharmaceutical preparation.

In reality, a powder probably contains particles with different degrees of crystallinity, just as it may contain particles with varying sizes and shapes. The lower the crystallinity of a solid, the greater its enthalpy and entropy. The increase in enthalpy is never totally compensated by the increase in entropy; therefore, the Gibbs free energy, which reflects the balance between

them, actually increases. Hence, the lower the crystallinity of a material (powder), and consequently the greater its amorphous character, the greater its apparent intrinsic solubility and dissolution rate, but the lower its thermodynamic stability. Because of the great relevance of these properties, crystallinity is also an important property and requires measurement by a suitable method.

In the following chapter, the crystallinity or the content of amorphous parts of a powder are measured by calorimetric methods such as microcalorimetry or solution calorimetry, although other methods could be used (e.g., see general chapter *Characterization of Crystalline and Partially Crystalline Solids by X-ray Powder Diffraction (XRPD)* ⟨941⟩).

Many substances are capable of crystallizing in more than one type of crystal lattice, which is known as polymorphism. If water or a solvent is incorporated in the crystal lattice, the crystals are termed hydrates or solvates. Because of the different crystal packing, and/or molecular conformation and lattice energy, they usually exhibit different physical properties. For simplicity, calorimetry measurements for degree of crystallinity determination discussed here assume only one solid crystalline form present in the material of interest. The theory and experimental technique can be easily expanded to polymorphic systems with proper consideration of the enthalpy differences among the polymorphs.

METHOD 1—MICROCALORIMETRY (DETERMINATION OF AMORPHOUS CONTENT)

Most chemical, physical, and biological processes are associated with the exchange of heat. Microcalorimetry is a highly sensitive technique to monitor and quantify both exothermic (heat producing) and endothermic (heat absorbing) changes associated with those processes. The technique allows the determination of the rate and extent of chemical reactions, changes of phase, or changes of structure.

Thermal events producing only a fraction of a microwatt can be observed using microcalorimetry. This means that temperature differences less than 10^{-6} K must be detectable. Microcalorimetry typically uses the heat flow (heat leakage) principle, where, in a thermally defined vessel, the heat produced (or absorbed) flows away from (or into) the vessel in an effort to reestablish thermal equilibrium with its surroundings. Exceptional thermal stability with its surrounding has to be achieved either by a heat sink or an electronically regulated surrounding.

Heat energy from an active sample in the reaction vessel is channeled typically through Peltier elements; they act as thermoelectric generators using the Seebeck effect. The heat energy is converted into a voltage signal proportional to the heat flow. Results are typically presented as a measure of the thermal energy produced per unit of time (Watt) as a function of time.

Apparatus

Microcalorimeters are typically designed as twin systems with a measuring vessel and a reference vessel. Vessels are typically made of glass or stainless steel. For certain applications, specially designed vessels that allow the addition of a gas, a liquid, or a solid material may be used.

Calibration

The microcalorimeter is calibrated for heat flow (energy per time unit) using either calibrated external or internal electrical heat sources or a suitable standard reaction.

Sensitivity

The sensitivity of the microcalorimetric method can be assessed on the basis of an appropriate standard sample analyzed according to the corresponding method in conjunction with the determination of the instrument baseline noise.

Procedure

Weigh an appropriate quantity of the material in a suitable vessel. Close the vessel carefully, to avoid any evaporation of solvents, and place the vessel in the sample holder. If appropriate, allow the vessel to equilibrate at the temperature of the measurement before placing it in the measuring position.

Begin the analysis, and record the heat flow with the time on the abscissa and the heat flow on the ordinate (specify the direction of exothermic or endothermic heat flow).

Detection and Quantification of Amorphous Content in Powders

The amorphous state is metastable with respect to the crystalline state; recrystallization may therefore occur. The measurement of the heat of recrystallization enables the amorphous content to be determined by the area of the recrystallization peak. By relating the output from the microcalorimeter for a sample to that obtained from an amorphous standard, it is possible to quantify the amorphous content of the sample. The range of amorphous content covered by this method depends on the individual substance to be tested. In favorable cases, limits of detection below 1% can be reached.

Recrystallization can be initiated by subjecting the sample to higher relative humidity or an atmosphere containing organic vapor. The sample is typically placed in an ampul that also contains a small test tube containing an aqueous saturated salt solution, an organic solvent, or a solvent mixture.

The heat of recrystallization is typically measured using a fixed sample mass placed in a glass or steel vessel. The test tube containing a saturated salt solution or an organic solvent is chosen large enough to allow a full saturation of the atmosphere above the sample. The mass of the sample and the nature of the vapor atmosphere above the sample is chosen so that recrystallization occurs in such a way that a distinct peak is observed, clearly separated from initial thermal events caused by introduction of the sample.

The conditions under which the transition of the amorphous phase to a thermodynamically more stable crystalline state occurs will have a significant impact on the time of recrystallization. In particular, physical mixtures of purely amorphous and crystalline material will behave differently from a partially crystalline material. These effects should be considered when developing a method.

A typical response for the recrystallization of a mainly amorphous material is shown in *Figure 1*. The first part of the curve represents several concurrent processes taking place simultaneously, such as the absorption of water vapor into the amorphous parts of the powder and by the generation of water vapor from the test tube. After this initial response, there is a large exothermic response caused by the recrystallization of the amorphous material. Also included, but not seen, is the expulsion of excess water from the recrystallized parts and its condensation. Thus, the area under this exothermic recrystallization response is proportional to the heat of recrystallization.

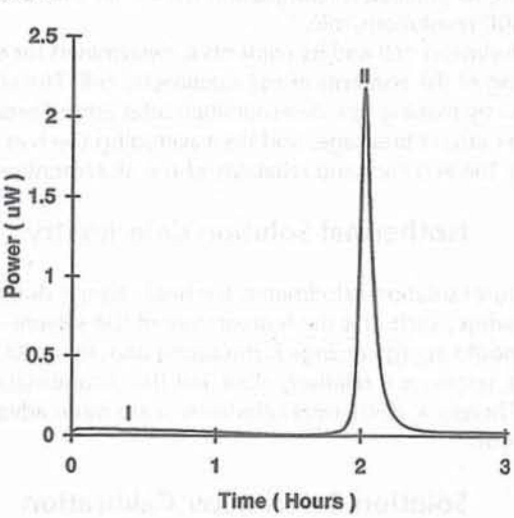

Figure 1. Typical microcalorimetric output of power (in µW) as a function of time (in h): amorphous collapse peak (I) and crystallization peak (II) for mainly amorphous lactose at 25° and 75% relative humidity.

METHOD 2—SOLUTION CALORIMETRY (DETERMINATION OF CRYSTALLINITY)

Solution calorimetry provides a means of determining enthalpy of solution (i.e., heat of solution under constant atmospheric pressure) of a substance. Enthalpy of solution is defined as the enthalpy of the substance dissolved in the solution to a defined concentration minus the enthalpy of the original substance. The solvent for the dissolution process must be such that the mass of solid dissolves within a time frame that matches the response time of the calorimeter, as discussed below. The enthalpy of solution is proportional to the amount of solid being dissolved. This amount may be defined as one mole for molar enthalpy or as one gram for specific enthalpy. If the substance possesses adequate purity (as determined by the degree of accuracy required) and if its molecular mass is known, the molar enthalpy is preferred; otherwise the specific enthalpy must be used. The enthalpy of solution is weakly dependent on both the temperature, which is usually 25.0°, and the final concentration of the dissolved solute.

It is usually preferred to express the crystallinity, P_c, of a substance on a percentage scale. This procedure requires two reference standards, namely a highly crystalline sample assuming 100% crystallinity and having a measured enthalpy of solution of ΔH^s_c, and an amorphous sample assuming 0% crystallinity and having a measured enthalpy of solution of ΔH^s_a. From these values and from the measured enthalpy, ΔH^s_s, of solution of the solid under study, the percentage crystallinity of the solid, P_c, may be calculated as follows:

$$P_c\,(\%) = 100(\Delta H^s_s - \Delta H^s_a)/(\Delta H^s_c - \Delta H^s_a)$$

Clearly, crystallinity expressed on a percentage scale depends on three measured values, and the enthalpies of solution may be replaced by other corresponding physical quantities that depend on crystallinity. The value of the percentage crystallinity of a sample, however, depends not only on the nature and method of preparation of the two reference standards, but also on the choice of the physical quantity that is measured.

The enthalpy of solution is measured either by an isoperibol (constant perimeter, i.e., jacket) solution calorimeter or by an isothermal (constant temperature) solution calorimeter. Typically, at least three measurements are made with each sample. The mean of these values is then calculated. The exact requirements will depend on the equipment capability and degree of accuracy needed.

Isoperibol Solution Calorimetry

In the isoperibol solution calorimeter, the heat change during the solution process causes a corresponding change in temperature of the solvent–solute system (i.e., solution). This temperature change is measured by a temperature sensor, which is wired to an electrical circuit that records an electrical signal corresponding to the temperature change. Typically, this temperature change in an electronic form is measured at precisely defined time intervals to produce temperature–time data that are collected, analyzed by a computer, and then plotted. A blank run without addition of the solid solute to the solvent normally shows no discernible change in the slope of the temperature–time plot.

For isoperibol solution calorimeters, response is fairly rapid, but corrections must be made for any heat losses to or heat gains from the bath. Therefore, isoperibol solution calorimeters are more advantageous than isothermal solution calorimeters when the solution process is relatively fast. For all measurements of enthalpy of solution using isoperibol solution calorimeters, the choice of solvent is critical. The nature and mass of the solvent and the mass of sample allow the total heat change, corresponding to total dissolution of the solid, to proceed to completion within five min under vigorous stirring at a constant rotational speed within the range of 400–600 revolutions/min.

The effective heat capacity of the calorimeter cell and its contents is determined for every calorimeter run. This determination is accomplished by electrical heating of the contents of the calorimeter cell. The effective heat capacity is determined according to one of two protocols—either by making one determination after ampul breakage or by making one determination before and a second determination after ampul breakage, and then averaging the two results. The accuracy and reliability of the electrical heating are established by the accuracy and reliability of the aforementioned chemical calibrations.

Isothermal Solution Calorimetry

In the isothermal (constant temperature) solution calorimeter, the heat change during the solution process is compensated for by an equal but opposite energy change, such that the temperature of the solvent–solute system (i.e., solution) remains essentially constant. This equal but opposite energy change is measured and, when its sign is reversed, provides the enthalpy of solution. For isothermal calorimeters, response is relatively slow, but the compensation process eliminates the effects of heat losses to or heat gains from the bath. Therefore, isothermal calorimeters are more advantageous than isoperibol calorimetry when the solution process is relatively slow.

Solution Calorimeter Calibration

To ensure the accuracy of the calorimeter, chemical calibrations must be performed on a regular basis. For an endothermic solution process, the calibration of the calorimeter is checked by measuring the heat absorbed during the dissolution of potassium chloride in distilled water at 298.15 K (25.0°). The established enthalpy change in this endothermic process is 235.5 J/g (17.56 kJ/mol). For an exothermic solution process, the calorimeter is checked by measuring the heat evolved during the dissolution of 5 g/L of tromethamine [tris(hydroxymethyl)aminomethane, THAM] in a 0.1 mol/L aqueous hydrochloric acid solution at 298.15 K (25.0°). The established heat for the aforementioned process is −246.0 J/g (−29.80 kJ/mol).

Sample Handling

The chemical and physical stability of solids may decrease with decreasing crystallinity. In particular, solids of low crystallinity, especially amorphous solids, tend to sorb water vapor from the atmosphere, leading to crystallization and a corresponding gain in crystallinity. For these reasons, anhydrous samples whose crystallinity is to be determined must be stored at zero humidity or below critical humidity levels in sealed chambers containing a desiccant, preferably containing an indicator of effectiveness. If crystallinity–humidity studies are to be carried out, the sample is stored in a sealed chamber containing a saturated salt solution to provide a defined relative humidity.

⟨697⟩ CONTAINER CONTENT FOR INJECTIONS

Each container of an injection contains sufficient excess to allow withdrawal of the labeled quantity of drug (see *Pharmaceutical Dosage Forms* ⟨1151⟩, *Excess Volume in Injections*). Such withdrawal shall be performed according to labeled directions, if provided.

DETERMINATION OF VOLUME OF INJECTION IN CONTAINERS

This section is harmonized with the corresponding texts of the *European Pharmacopoeia* and/or the *Japanese Pharmacopoeia*. These pharmacopeias have undertaken not to make any unilateral change to this harmonized section. A portion of the present text (see below) is national *USP* text, and therefore not part of the harmonized text; it is marked with symbols (•,) to specify this fact.

Suspensions and emulsions must be shaken before withdrawal of the contents and before the determination of the density. Oily and viscous preparations may be warmed according to the instructions on the label, if necessary, and thoroughly shaken immediately before removing the contents. The contents are then cooled to 20°–25° before measuring the volume. •Sterile solid formulations must be constituted according to labeled directions before removing the contents. Contents are then to be measured following the procedures for suspensions, emulsions, or solutions, as appropriate.•

Single-Dose Containers

Select 1 container if the volume of the container is 10 mL or more, 3 containers if the nominal volume is more than 3 mL and less than 10 mL, or 5 containers if the nominal volume is 3 mL or less. Take up individually the total contents of each container selected into a dry syringe of a capacity not exceeding three times the volume to be measured and fitted with a 21-gauge needle NLT 2.5 cm (1 inch) in length. Expel any air bubbles from the syringe and needle, and then discharge the contents of the syringe, without emptying the needle, into a standardized, dry cylinder (graduated to contain rather than to deliver the designated volumes) of such size that the volume to be measured occupies at least 40% of its graduated volume. Alternatively, the volume of the contents in mL may be calculated as the mass, in g, divided by the density. For containers with a nominal volume of 2 mL or less, the contents of a sufficient number of containers may be pooled to obtain the volume required for the measurement, provided that a separate, dry syringe assembly is used for each container. The contents of containers holding 10 mL or more may be determined by means of opening them and emptying the contents directly into the graduated cylinder or tared beaker.

The volume is NLT the nominal volume in the case of containers examined individually or, in the case of containers with a nominal volume of 2 mL or less, is NLT the sum of the nominal volumes of the containers taken collectively.

Multi-Dose Containers

For Injections in multiple-dose containers labeled to yield a specific number of doses of a stated volume, select 1 container, and proceed as directed for single-dose containers, using the same number of separate syringe assemblies as the number of doses specified. The volume is such that each syringe delivers NLT the stated dose.

Injections in Cartridges or Prefilled Syringes

Select 1 container if the volume is 10 mL or more, 3 containers if the nominal volume is more than 3 mL and less than 10 mL, or 5 containers if the nominal volume is 3 mL or less. If necessary, fit the containers with the accessories required for their use (needle, piston, syringe) and transfer the entire contents of each container without emptying the needle into a dry tared beaker by slowly and constantly depressing the piston. Determine the volume, in mL, calculated as the mass, in g, divided by the density.

The volume measured for each of the containers is NLT the nominal volume.

Large-Volume Intravenous Solutions

For intravenous solutions, select 1 container. Transfer the contents into a dry measuring cylinder of such a capacity that the volume to be determined occupies at least 40% of the nominal volume of the cylinder. Measure the volume transferred.

The volume is NLT the nominal volume.

⟨698⟩ DELIVERABLE VOLUME

PURPOSE

The following tests are designed to provide assurance that oral liquids will, when transferred from the original container, deliver the volume of dosage form that is declared on the label.

SCOPE

These tests are applicable to products that are dispensed by pouring from the container. The tests apply whether the products are supplied as liquid preparations or liquid preparations that are constituted from solids upon the addition of a designated volume of a specific diluent. They are not required for an article packaged in single-unit containers when the monograph includes the test for *Uniformity of Dosage Units* ⟨905⟩.

DENSITY DETERMINATION

Because of the tendency of oral liquids to entrain air when shaken or transferred, a more accurate method for determining the delivered volume is to first determine the delivered mass, and then, using the density of the material, to convert the mass to delivered volume. In order to do that, a determination of the density of the material is required. The following is one method to determine density:

1. Tare a 100-mL volumetric flask containing 50.0 mL of water.
2. Add approximately 25 g of well-shaken product, and gently swirl the contents to mix.
3. Reweigh the flask.
4. From a buret, add an accurately measured amount of water to bring the flask contents to volume while gently swirling the contents of the flask. Record the volume taken from the buret.
5. Calculate the density of the sample:

$$W/V$$

in which W is the weight, in g, of the material taken; and V is 50.0 mL minus the volume, in mL, of water necessary to adjust the contents of the flask to volume. Other methods to determine the density may be employed depending on the formulation (e.g., substantially nonaqueous formulations).

TEST PREPARATIONS

For the determination of deliverable volume, select NLT 30 containers, and proceed as follows for the dosage form designated.

Oral Solutions and Oral Suspensions

Shake the contents of 10 containers individually.

Powders That Are Labeled to State the Volume of Oral Liquid That Results When the Powder Is Constituted with the Volume of Diluent Stated in the Labeling

Constitute 10 containers with the volume of diluent stated in the labeling, accurately measured, and shake individually.

PROCEDURE

The deliverable volume can be determined by weight as follows:

1. Discharge the container contents into a suitable tared container (allowing drainage for NMT 5 s for single-dose containers and NMT 10 min for multiple-unit containers).
2. Determine the mass of the contents.
3. Calculate the volume using the density.

Alternatively, the following by volume procedure may be used:

1. Under conditions of use or as instructed in the labeling, carefully discharge the contents of each container into separate dry graduated cylinders of a rated capacity not exceeding two and a half times the volume to be measured, and calibrated "to contain" (see *Volumetric Apparatus* ⟨31⟩). Care must be taken to avoid the formation of air bubbles during the process. In the absence of labeling instructions, support the containers at about a 30° angle to the horizontal, and gently discharge the contents into the graduated cylinder.
2. Allow each container to drain for a period not to exceed 10 min for multiple-unit containers and 5 s for single-unit containers, unless otherwise specified in the monograph.
3. When free from bubbles, measure the volume of each mixture.

ACCEPTANCE CRITERIA

Use the following criteria to determine compliance with this test.

For Multiple-Unit Containers (see *Figure 1*)

The average volume of liquid obtained from the 10 containers is NLT 100%, and the volume of no container is less than 95% of the volume declared in the labeling. If A, the average volume is less than 100% of that declared in the labeling, but the volume of no container is less than 95% of the labeled amount, or if B, the average volume is NLT 100% and the volume of NMT 1 container is less than 95%, but is NLT 90% of the labeled volume, perform the test on 20 additional containers. The average volume of liquid obtained from the 30 containers is NLT 100% of the volume declared in the labeling; and the volume of liquid obtained from NMT 1 of the 30 containers is less than 95%, but NLT 90% of that declared in the labeling.

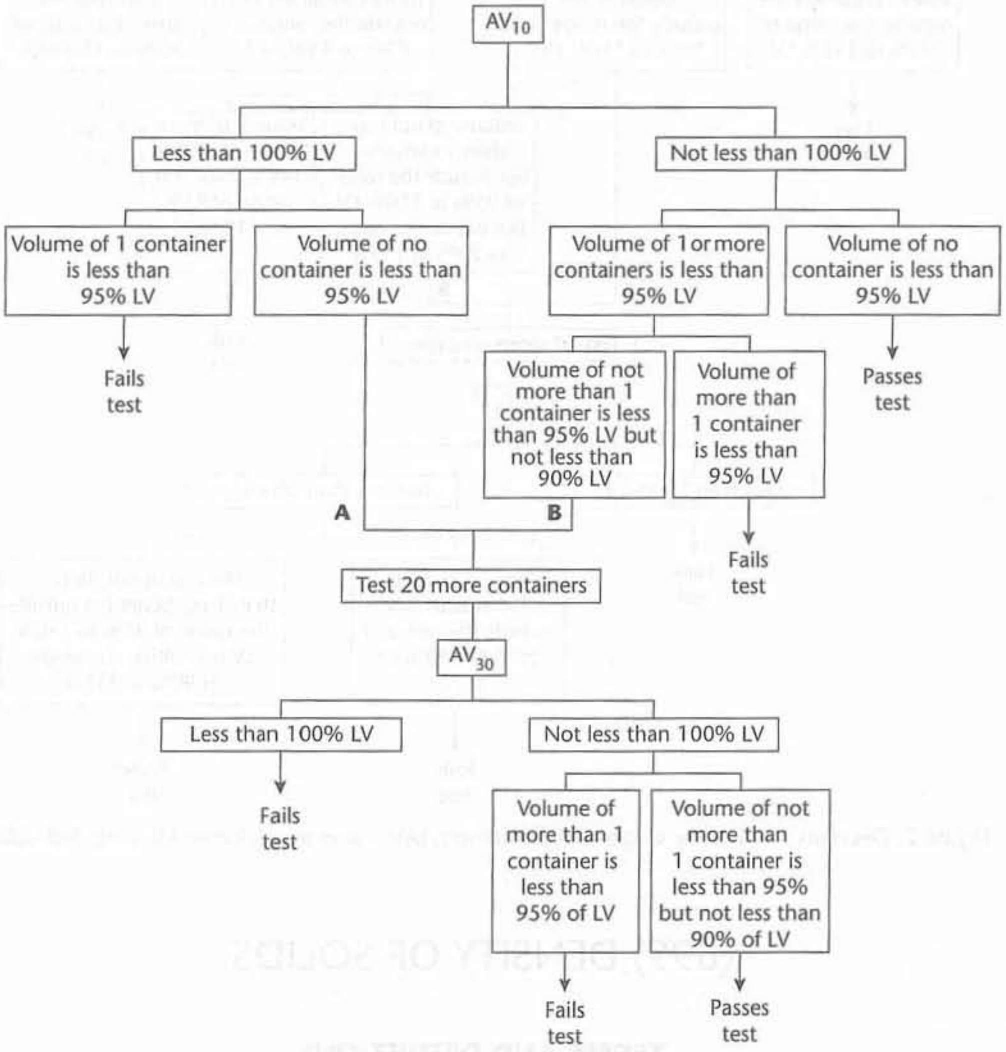

Figure 1. Decision scheme for multiple-unit containers. (AV = Average volume. LV = Labeled volume)

For Single-Unit Containers (see *Figure 2*)

The average volume of liquid obtained from the 10 containers is NLT 100%, and the volume of each of the 10 containers lies within the range of 95%–110% of the volume declared in the labeling. If A, the average volume is less than 100% of that declared in the labeling, but the volume of no container is outside the range of 95%–110%, or if B, the average volume is NLT 100% and the volume of NMT 1 container is outside the range of 95%–110%, but within the range of 90%–115%, perform the test on 20 additional containers. The average volume of liquid obtained from the 30 containers is NLT 100% of the volume declared in the labeling; and the volume obtained from NMT 1 of the 30 containers is outside the range of 95%–110%, but within the range of 90%–115% of the volume declared on the labeling.

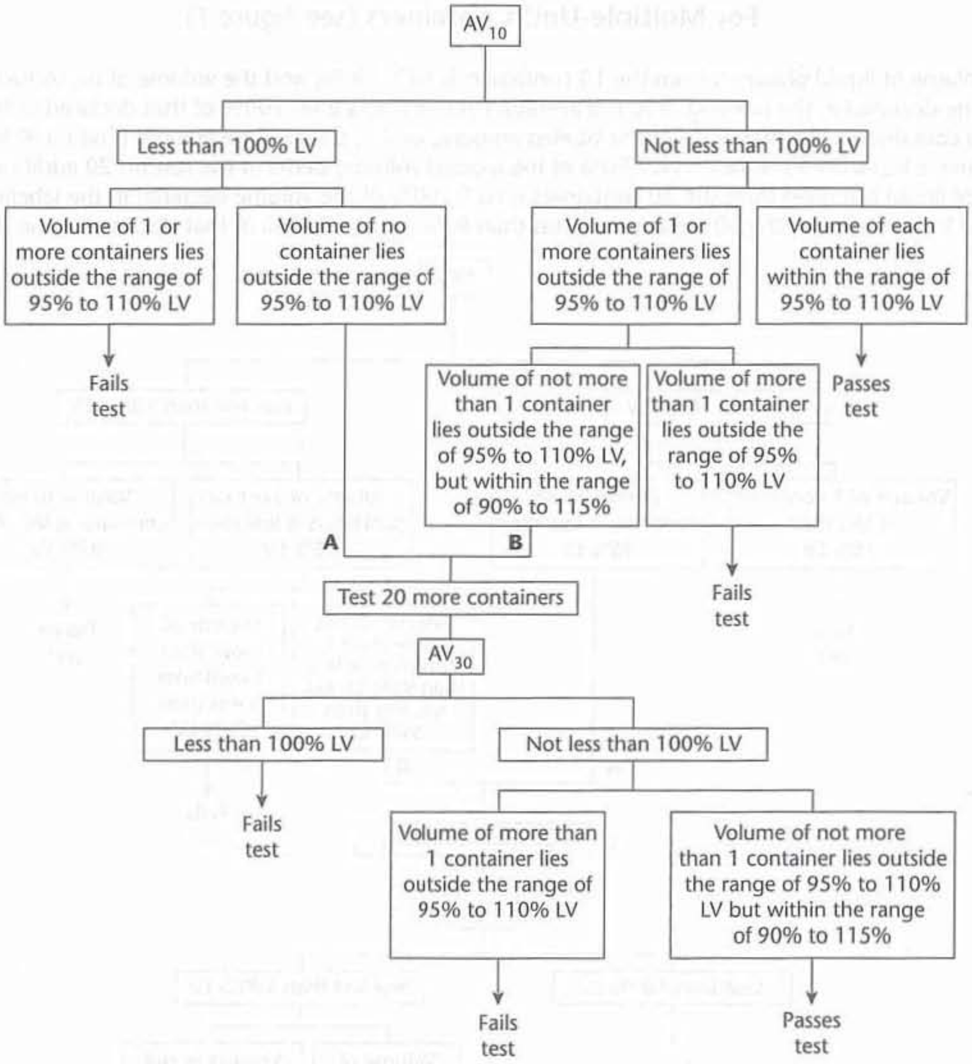

Figure 2. Decision scheme for single-unit containers. (AV = average volume; LV = labeled volume)

⟨699⟩ DENSITY OF SOLIDS

TERMS AND DEFINITIONS

Density refers to the average spatial distribution of mass in a material. The density of solids typically is expressed in g per cm^3, in contrast to fluids, where the density is commonly expressed in g per mL at a stated reference temperature.

The density of a solid particle can assume different values depending on the method used to measure the volume of the particle. It is useful to distinguish among three different possibilities.

The *true density* of a substance is the average mass per unit volume, exclusive of all voids that are not a fundamental part of the molecular packing arrangement. It is a property of a particular material, and hence should be independent of the method of determination. The true density of a perfect crystal can be determined from the size and composition of the unit cell.

The *pycnometric density*, as measured by gas pycnometry, is a convenient density measurement for pharmaceutical powders. In a gas pycnometer, the volume occupied by a known mass of powder is determined by measuring the volume of gas displaced by the powder. The quotient of the mass and volume is the pycnometric density. The pycnometric density equals the true density unless the material contains impenetrable voids, or sealed pores, that are inaccessible to the gas used in the pycnometer.

The *granular density* includes contributions to particle volume from open pores smaller than some limiting size. The size limit depends on the method of measurement. A common measurement technique is mercury porosimetry, where the limiting pore size depends upon the maximum intrusion pressure. Because of the additional contribution from pore volume, the granular

density will never be greater than the true density. A related concept is the *aerodynamic density*, which is the density of the particle with a volume defined by the aerodynamic envelope of the particle in a flowing stream. Both the closed and open pores contribute to this volume, but the open pores fill with the permeating fluid. The aerodynamic density, therefore, depends on the density of the test fluid if the particle is porous.

For brevity, the pycnometric density and the true density are both referred to as density. If needed, these quantities may be distinguished based on the method of measurement.

The density of a material depends on the molecular packing. For gases and liquids, the density will depend only on temperature and pressure. For solids, the density will also vary with the crystal structure and degree of crystallinity. If the solids are amorphous, the density may further depend upon the history of preparation and treatment. Therefore, unlike fluids, the densities of two chemically equivalent solids may be different, and this difference reflects a difference in solid-state structure. The density of constituent particles is an important physical characteristic of pharmaceutical powders.

Beyond these definitions of particle density, the *bulk density* of a powder includes the contribution of interparticulate void volume. Hence, the bulk density depends on both the density of powder particles and the packing of powder particles.

GAS PYCNOMETRY FOR THE MEASUREMENT OF DENSITY

Gas pycnometry is a convenient and suitable method for the measurement of the density of powder particles. A simple schematic of one type of gas pycnometer is shown in *Figure 1*.

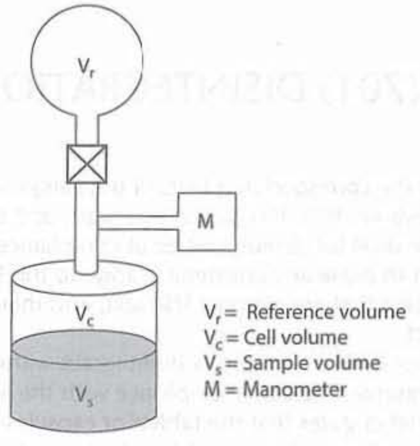

Figure 1. Schematic of gas pycnometer.

The sample, with mass *w* and volume V_s, is placed inside a sealed test cell with an empty cell volume of V_c. The system reference pressure, P_r, is determined at the manometer while the valve that connects the reference volume with the test cell is open. The valve is closed to separate the reference volume, V_r, from the test cell. The test cell is pressurized with the measurement gas to an initial pressure, P_i. Then the valve is opened to connect the reference volume, V_r, with the test cell, and the pressure drops to the final pressure, P_f. If the measurement gas behaves ideally under the conditions of measurement, the sample volume, V_s, is given by the following expression:

$$V_S = V_C - \frac{V_r}{\left[\frac{P_i - P_r}{P_f - P_r}\right] - 1} \quad (1)$$

The density, ρ, is given by the equation:

$$\rho = \frac{w}{V_s} \quad (2)$$

Details of the instrumental design may differ, but all gas pycnometers rely on the measurement of pressure changes as a reference volume is added to, or deleted from, the test cell.

The measured density is a volume-weighted average of the densities of individual powder particles. The density will be in error if the test gas sorbs onto the powder or if volatile contaminants are evolved from the powder during the measurement. Sorption is prevented by an appropriate choice of test gas. Helium is the common choice. Volatile contaminants in the powder are removed by degassing the powder under a constant purge of helium prior to the measurement. Occasionally, powders may have to be degassed under vacuum. Two consecutive readings should yield sample volumes that are equal within 0.2% if volatile contaminants are not interfering with the measurements. Because volatiles may be evolved during the measurement, the weight of the sample should be taken after the pycnometric measurement of volume.

Method

Ensure that the reference volume and the calibration volume have been determined for the gas pycnometer by an appropriate calibration procedure. The test gas is helium, unless another gas is specified in the individual monograph. The temperature of the gas pycnometer should be between 15° and 30° and should not vary by more than 2° during the course of the measurement. Load the test cell with the substance under examination that has been prepared according to the individual monograph. Where ⟨699D⟩ is indicated, dry the substance under examination as directed for *Loss on drying* in the monograph unless other drying conditions are specified in the monograph *Density of solids* test. Where ⟨699U⟩ is indicated, the substance under examination is used without drying. Use a quantity of powder recommended in the operating manual for the pycnometer. Seal the test cell in the pycnometer, and purge the pycnometer system with the test gas according to the procedure given in the manufacturer's operating instructions. If the sample must be degassed under vacuum, follow the recommendations in the individual monographs and the instructions in the operating manual for the pycnometer.

The measurement sequence above describes the procedure for the gas pycnometer shown in *Figure 1*. If the pycnometer differs in operation or in construction from the one shown in *Figure 1*, follow the operating procedure given in the manual for the pycnometer.

Repeat the measurement sequence for the same powder sample until consecutive measurements of the sample volume, V_s, agree to within 0.2%. Unload the test cell and measure the final powder weight, w. Calculate the pycnometric density, ρ, of the sample according to *Equation 2*.

⟨701⟩ DISINTEGRATION

This general chapter is harmonized with the corresponding texts of the *European Pharmacopoeia* and/or the *Japanese Pharmacopoeia*. The texts of these pharmacopeias are therefore interchangeable, and the methods of the *European Pharmacopoeia* and/or the *Japanese Pharmacopoeia* may be used for demonstration of compliance instead of the present general chapter. These pharmacopeias have undertaken not to make any unilateral change to this harmonized chapter.

Portions of the present general chapter text that are national *USP* text, and therefore not part of the harmonized text, are marked with symbols (♦♦) to specify this fact.

This test is provided to determine whether tablets or capsules disintegrate within the prescribed time when placed in a liquid medium at the experimental conditions presented below. ♦Compliance with the limits on *Disintegration* stated in the individual monographs is required except where the label states that the tablets or capsules are intended for use as troches, or are to be chewed, or are designed as extended-release dosage forms or delayed-release dosage forms. Determine the type of units under test from the labeling and from observation, and apply the appropriate procedure to 6 or more dosage units.♦

For the purposes of this test, disintegration does not imply complete solution of the unit or even of its active constituent. Complete disintegration is defined as that state in which any residue of the unit, except fragments of insoluble coating or capsule shell, remaining on the screen of the test apparatus or adhering to the lower surface of the disk, if used, is a soft mass having no palpably firm core.

APPARATUS

The apparatus consists of a basket-rack assembly, a 1000-mL, low-form beaker, 138 to 160 mm in height and having an inside diameter of 97 to 115 mm for the immersion fluid, a thermostatic arrangement for heating the fluid between 35° and 39°, and a device for raising and lowering the basket in the immersion fluid at a constant frequency rate between 29 and 32 cycles per minute through a distance of not less than 53 mm and not more than 57 mm. The volume of the fluid in the vessel is such that at the highest point of the upward stroke the wire mesh remains at least 15 mm below the surface of the fluid and descends to not less than 25 mm from the bottom of the vessel on the downward stroke. At no time should the top of the basket-rack assembly become submerged. The time required for the upward stroke is equal to the time required for the downward stroke, and the change in stroke direction is a smooth transition, rather than an abrupt reversal of motion. The basket-rack assembly moves vertically along its axis. There is no appreciable horizontal motion or movement of the axis from the vertical.

Basket-Rack Assembly

The basket-rack assembly consists of six open-ended transparent tubes, each 77.5 ± 2.5 mm long and having an inside diameter of 20.7 to 23 mm and a wall 1.0 to 2.8 mm thick; the tubes are held in a vertical position by two plates, each 88 to 92 mm in diameter and 5 to 8.5 mm in thickness, with six holes, each 22 to 26 mm in diameter, equidistant from the center of the plate and equally spaced from one another. Attached to the under surface of the lower plate is a woven stainless steel wire cloth, which has a plain square weave with 1.8- to 2.2-mm apertures and with a wire diameter of 0.57 to 0.66 mm. The parts

of the apparatus are assembled and rigidly held by means of three bolts passing through the two plates. A suitable means is provided to suspend the basket-rack assembly from the raising and lowering device using a point on its axis.

The design of the basket-rack assembly may be varied somewhat, provided the specifications for the glass tubes and the screen mesh size are maintained. The basket-rack assembly conforms to the dimensions found in *Figure 1*.

Disks

The use of disks is permitted only where specified or allowed •in the monograph. If specified in the individual monograph,• each tube is provided with a cylindrical disk 9.5 ± 0.15 mm thick and 20.7 ± 0.15 mm in diameter. The disk is made of a suitable transparent plastic material having a specific gravity of between 1.18 and 1.20. Five parallel 2 ± 0.1-mm holes extend between the ends of the cylinder. One of the holes is centered on the cylindrical axis. The other holes are centered 6 ± 0.2 mm from the axis on imaginary lines perpendicular to the axis and parallel to each other. Four identical trapezoidal-shaped planes are cut into the wall of the cylinder, nearly perpendicular to the ends of the cylinder. The trapezoidal shape is symmetrical; its parallel sides coincide with the ends of the cylinder and are parallel to an imaginary line connecting the centers of two adjacent holes 6 mm from the cylindrical axis. The parallel side of the trapezoid on the bottom of the cylinder has a length of 1.6 ± 0.1 mm, and its bottom edges lie at a depth of 1.5 to 1.8 mm from the cylinder's circumference. The parallel side of the trapezoid on the top of the cylinder has a length of 9.4 ± 0.2 mm, and its center lies at a depth of 2.6 ± 0.1 mm from the cylinder's circumference. All surfaces of the disk are smooth. If the use of disks is specified •in the individual monograph,• add a disk to each tube, and operate the apparatus as directed under *Procedure*. The disks conform to dimensions found in *Figure 1*[1].

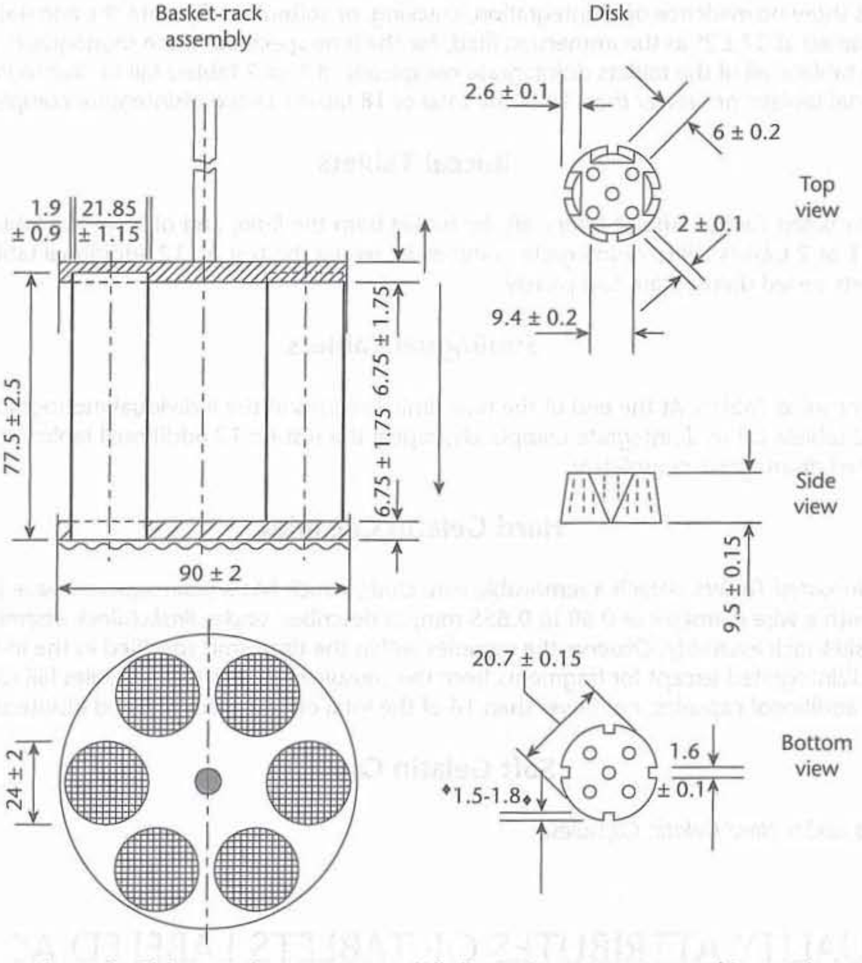

Figure 1. Disintegration apparatus. (All dimensions are expressed in mm.)

[1] The use of automatic detection employing modified disks is permitted where the use of disks is specified or allowed. Such disks must comply with the requirements for density and dimension given in this chapter.

PROCEDURE

•Uncoated Tablets

▲Place 1 dosage unit in each of the six tubes of the basket and, if prescribed, add a disk. Operate the apparatus, using •water or,• the specified medium as the immersion fluid, maintained at 37 ± 2°. At the end of the time limit specified •in the monograph,• lift the basket from the fluid, and observe the tablets: all of the tablets have disintegrated completely. If 1 or 2 tablets fail to disintegrate completely, repeat the test on 12 additional tablets. The requirement is met if not fewer than 16 of the total of 18 tablets tested are disintegrated.

•Plain-Coated Tablets

Apply the test for *Uncoated Tablets,* operating the apparatus for the time specified in the individual monograph.

Delayed-Release (Enteric-Coated) Tablets

Place 1 tablet in each of the six tubes of the basket and, if the tablet has a soluble external sugar coating, immerse the basket in water at room temperature for 5 minutes. Then operate the apparatus using simulated gastric fluid TS maintained at 37 ± 2° as the immersion fluid. After 1 hour of operation in simulated gastric fluid TS, lift the basket from the fluid, and observe the tablets: the tablets show no evidence of disintegration, cracking, or softening. Operate the apparatus, using simulated intestinal fluid TS maintained at 37 ± 2° as the immersion fluid, for the time specified in the monograph. Lift the basket from the fluid, and observe the tablets: all of the tablets disintegrate completely. If 1 or 2 tablets fail to disintegrate completely, repeat the test on 12 additional tablets: not fewer than 16 of the total of 18 tablets tested disintegrate completely.

Buccal Tablets

Apply the test for *Uncoated Tablets.* After 4 hours, lift the basket from the fluid, and observe the tablets: all of the tablets have disintegrated. If 1 or 2 tablets fail to disintegrate completely, repeat the test on 12 additional tablets: not fewer than 16 of the total of 18 tablets tested disintegrate completely.

Sublingual Tablets

Apply the test for *Uncoated Tablets.* At the end of the time limit specified in the individual monograph: all of the tablets have disintegrated. If 1 or 2 tablets fail to disintegrate completely, repeat the test on 12 additional tablets: not fewer than 16 of the total of 18 tablets tested disintegrate completely.

Hard Gelatin Capsules

Apply the test for *Uncoated Tablets.* Attach a removable wire cloth, which has a plain square weave with 1.8- to 2.2-mm mesh apertures and with a wire diameter of 0.60 to 0.655 mm, as described under *Basket-Rack Assembly,* to the surface of the upper plate of the basket-rack assembly. Observe the capsules within the time limit specified in the individual monograph: all of the capsules have disintegrated except for fragments from the capsule shell. If 1 or 2 capsules fail to disintegrate completely, repeat the test on 12 additional capsules: not fewer than 16 of the total of 18 capsules tested disintegrate completely.

Soft Gelatin Capsules

Proceed as directed under *Hard Gelatin Capsules.*▲

General Chapters

⟨705⟩ QUALITY ATTRIBUTES OF TABLETS LABELED AS HAVING A FUNCTIONAL SCORE

PURPOSE

This chapter provides quality attributes for products with approved labeling indicating that the tablets can be split to produce multiple portions that have an accurate fractional dose (labeled as functionally scored). The label claim of the split portions should be a simple fractional part of the claim for the intact tablet based on the number of scores and the size of the split

portion (e.g., one-half, one-third, or one-quarter). At the time of splitting, the intact tablets should conform to the monograph specification. With the exception of dose, each split portion from tablets labeled as having a functional score are expected to conform to the quality attributes of the whole tablets. The split portions resulting from subdividing a functionally scored tablet should conform to the tests for *Splitting Tablets with Functional Scoring* and *Dissolution* or *Disintegration* given in this chapter.

SCOPE

This chapter applies to tablets labeled as having a functional score and to the split portions that represent any labeled fraction of the whole functionally scored tablet dose. Tablets should be split as part of the test procedure and the storage conditions for the split portions should be defined in the test procedure. For *Dissolution* or *Disintegration* testing, analysts should use only split portions from tablets determined to be acceptable by the *Splitting Tablets with Functional Scoring* test.

SPLITTING TABLETS WITH FUNCTIONAL SCORING

Test Procedure

1. Take a random sample of 30 intact tablets, and proceed as follows.
2. Accurately weigh each tablet, and record its weight.
3. For each intact tablet, determine the expected weight of the split portions by dividing the whole-tablet weight by the designated number of split portions indicated on the labeling.
4. Split each tablet by hand (without mechanical assistance) into the designed number of split portions, and weigh each split portion.
5. For each tablet, determine the percent of the expected weight in each split portion.

An acceptable tablet breaks into the designed number of segments, and each split portion has NLT 75% and NMT 125% of the expected weight of the split tablet portion. [NOTE—Set aside split tablet portions derived from acceptable tablets for subsequent testing for dissolution or disintegration.]

Acceptance criteria: NLT 28 of the 30 tablets are acceptable.

DISSOLUTION

Use split portions from tablets that are acceptable according to the *Splitting Tablets with Functional Scoring* test.

Immediate-Release Tablets

Dissolution for immediate-release tablets is performed at the S_2 stage (see *Dissolution* ⟨711⟩). Test 12 split tablet portions according to the specified *Medium, Apparatus, Times,* and *Analysis.* The average of the 12 results is NLT *Q,* and no result is less than $Q - 15\%$.

Extended-Release Tablets

Perform dissolution testing of split tablet portions from extended-release tablets by one of the two alternative procedures. The procedure to be used is specified in the monograph.

Procedure 1 (*Procedure for Extended-Release Dosage Forms, Dissolution* ⟨711⟩): Individually test 12 split tablet portions and 12 intact tablets.

Medium, Apparatus, and **Analysis:** As given in the monograph following the appropriate test number found on the labeling. Dissolution profile test time points are determined as follows. From the appropriate dissolution test in the monograph, use the time points given. At a minimum, use three time points with no more than one time point where the results exceed 85% dissolved.

Calculate the similarity factor (f_2) for the intact-tablet results and the split-tablet portion results:

$$f_2 = 50 \bullet \log\left\{\left[1 + (1/n)\sum_{t=1}^{n}(R_t - T_t)^2\right]^{-0.5} \bullet 100\right\}$$

R_t = cumulative percentage of the labeled drug dissolved at each of the selected *n* time points of the intact tablets
T_t = cumulative percentage of the labeled drug dissolved at each of the selected *n* time points of the split tablet portions

Acceptance criteria: The calculated f_2 is NLT 50 (acceptable range: 50–100).

Procedure 2 (*Procedure for Extended-Release Dosage Forms, Dissolution* ⟨711⟩): Use a split-tablet portion as the dosage unit. Individually test 12 dosage units.

Medium, Apparatus, Times, and **Analysis:** As given in the monograph following the appropriate test number found on the labeling.

Acceptance criteria: The percentages of the labeled amount released at the times specified conform to the L_2 level criteria of *Acceptance Table 2* in ⟨711⟩.

DISINTEGRATION

Disintegration testing is necessary only when used as a surrogate for dissolution testing as specified in the monograph. Follow the procedure using split portions from tablets that are acceptable according to the *Splitting Tablets with Functional Scoring* test as the dosage unit (see *Disintegration* ⟨701⟩).

⟨711⟩ DISSOLUTION

General chapter *Dissolution* ⟨711⟩ is being harmonized with the corresponding texts of the *European Pharmacopoeia* and/or the *Japanese Pharmacopoeia*. These pharmacopeias have undertaken to not make any unilateral change to this harmonized chapter.

Portions of the present general chapter text that are national *USP* text, and therefore not part of the harmonized text, are marked with symbols (•,) to specify this fact.

This test is provided to determine compliance with the dissolution requirements •where stated in the individual monograph, for dosage forms administered orally. In this general chapter, a dosage unit is defined as 1 tablet or 1 capsule or the amount specified. •Of the types of apparatus designs described herein, use the one specified in the individual monograph. Where the label states that an article is enteric coated and a dissolution or disintegration test does not specifically state that it is to be applied to delayed-release articles and is included in the individual monograph, the procedure and interpretation given for *Delayed-Release Dosage Forms* are applied, unless otherwise specified in the individual monograph.

FOR DOSAGE FORMS CONTAINING OR COATED WITH GELATIN

If the dosage form containing gelatin does not meet the criteria in the appropriate *Acceptance Table* (see *Interpretation, Immediate-Release Dosage Forms, Extended-Release Dosage Forms,* or *Delayed-Release Dosage Forms*) because of evidence of the presence of cross-linking, the dissolution procedure should be repeated with the addition of enzymes to the medium, as described below, and the dissolution results should be evaluated starting at the first stage of the appropriate *Acceptance Table*. It is not necessary to continue testing through the last stage (up to 24 units) when criteria are not met during the first stage testing, and evidence of cross-linking is observed.

Gelatin, in the presence of certain compounds and/or in certain storage conditions, including but not restricted to high humidity and temperature, may present cross-linking. A pellicle may form on the external and/or internal surface of the gelatin capsule shell or on the dosage form that prevents the drug from being released during dissolution testing (see more information in *Capsules—Dissolution Testing and Related Quality Attributes* ⟨1094⟩).

NOTE—All references to a chapter above ⟨1000⟩ are for information purposes only, for use as a helpful resource. These chapters are not mandatory unless explicitly called out for this application.

Dissolution Medium with pH ≤4.0

Enzyme: Pepsin, activity determined by the procedure in purified pepsin, in the *Reagent Specifications* section
Amount: A quantity of pepsin that results in an activity of NMT 750,000 Units/L of dissolution medium

Dissolution Medium with pH >4.0 and <6.8

Enzyme: Papain, activity determined by the *Assay* test in the monograph for *Papain*; or bromelain, activity determined by the procedure in bromelain, in the *Reagent Specifications* section
Amount: A quantity of papain that results in an activity of NMT 550,000 Units/L of dissolution medium, or a quantity of bromelain that results in an activity of NMT 30 gelatin-digesting units (GDU)/L of dissolution medium

Dissolution Medium with pH ≥6.8

Enzyme: Pancreatin, protease activity determined by the procedure in *Assay for protease activity* (*Casein digestive power*) in the monograph for *Pancreatin*
Amount: A quantity of pancreatin that results in a protease activity of NMT 2000 Units/L of dissolution medium

Dissolution Medium Containing Surfactant or Other Ingredients Known to Denature the Enzyme

If the dissolution medium contains surfactant or other ingredients that are known to denature the enzyme used, a pretreatment step in the dissolution testing of the dosage form may be applied. This pretreatment step is done using the specified dissolution medium without the surfactant or the ingredient and with the addition of the appropriate amount of enzyme according to the medium pH. The amount of enzyme added is appropriate to the volume of dissolution medium used in the pretreatment. To achieve the specified medium volume for the final dissolution testing, the pretreatment step may be conducted with a smaller volume of medium without the ingredient such that the final volume is obtained when the ingredient is added at the end of the pretreatment step. All of the other conditions of the test (apparatus, rotation, or flow rate) should remain as described in the method or monograph. Typically, the duration of the pretreatment step is NMT 15 min. The required pretreatment time should be evaluated on a case-by-case basis and should be scientifically justified. This time should be included in the total time of the test. As an example, if the total time of the test is 45 min and 15 min are used in the pretreatment step, the test will continue for 30 min after the addition of the ingredient.♦

APPARATUS

Apparatus 1 (Basket Apparatus)

The assembly consists of the following: a vessel, which may be covered, and made of glass or other inert, transparent material;[1] a motor; a metallic drive shaft; and a cylindrical basket. The vessel is partially immersed in a suitable water bath of any convenient size or heated by a suitable device, such as a heating jacket. The water bath or heating device permits holding the temperature inside the vessel at 37 ± 0.5° during the test and keeps the bath fluid in constant, smooth motion. No part of the assembly, including the environment in which the assembly is placed, contributes significant motion, agitation, or vibration beyond that due to the smoothly rotating, stirring element. An apparatus that permits observation of the specimen and of the stirring element during the test is preferable. The vessel is cylindrical, with a hemispherical bottom and ♦with one of the following dimensions and capacities: for a nominal♦ capacity of 1 L, the height is 160–210 mm, and its inside diameter is 98–106 mm; ♦for a nominal capacity of 2 L, the height is 280–300 mm, and its inside diameter is 98–106 mm; and for a nominal capacity of 4 L, the height is 280–300 mm, and its inside diameter is 145–155 mm♦. Its sides are flanged at the top. A fitted cover may be used to retard evaporation.[2] The shaft is positioned so that its axis is NMT 2 mm at any point from the vertical axis of the vessel and rotates smoothly and without significant wobble that could affect the results. A speed-regulating device is used that allows the shaft rotation speed to be selected and maintained at the specified rate ♦given in the individual monograph♦ within ±4%.

Shaft and basket components of the stirring element are fabricated of stainless steel, type 316, or other inert material, to the specifications shown in *Figure 1*. A basket having a gold coating of about 0.0001 inch (2.5 µm) thick may be used. A dosage unit is placed in a dry basket at the beginning of each test. The distance between the inside bottom of the vessel and the bottom of the basket is maintained at 25 ± 2 mm during the test.

[1] The materials should not sorb, react, or interfere with the specimen being tested.

[2] If a cover is used, it provides sufficient openings to allow ready insertion of the thermometer and withdrawal of specimens.

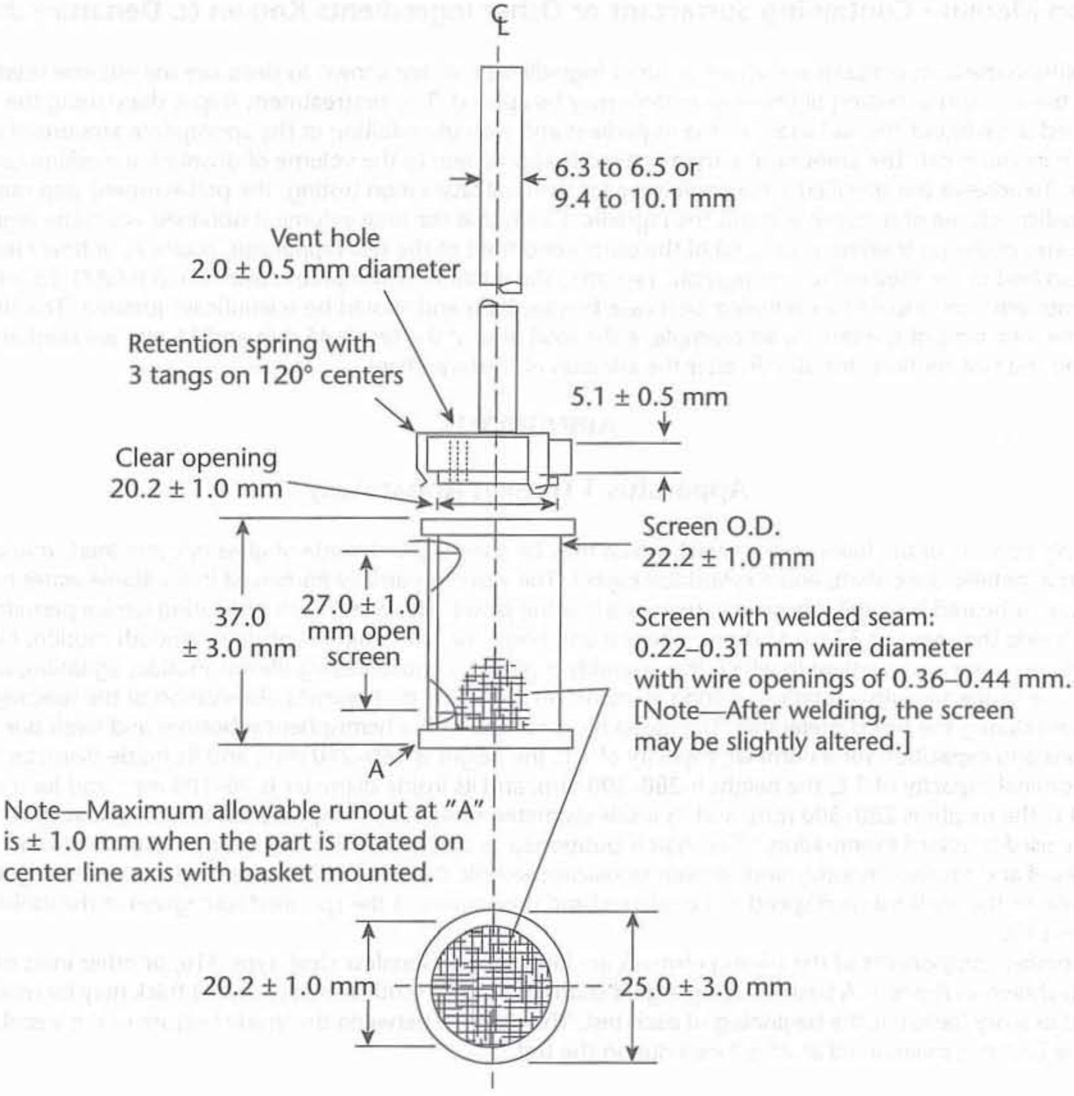

Figure 1. Basket stirring element.

Apparatus 2 (Paddle Apparatus)

Use the assembly from *Apparatus 1*, except that a paddle formed from a blade and a shaft is used as the stirring element. The shaft is positioned so that its axis is NMT 2 mm from the vertical axis of the vessel at any point and rotates smoothly without significant wobble that could affect the results. The vertical center line of the blade passes through the axis of the shaft so that the bottom of the blade is flush with the bottom of the shaft. The paddle conforms to the specifications shown in *Figure 2*. The distance of 25 ± 2 mm between the bottom of the blade and the inside bottom of the vessel is maintained during the test. The metallic or suitably inert, rigid blade and shaft compose a single entity. A suitable two-part, detachable design may be used, provided that the assembly remains firmly engaged during the test. The paddle blade and shaft may be coated with a suitable coating so as to make both of them inert. The dosage unit is allowed to sink to the bottom of the vessel before rotation of the blade is started. A small, loose piece of nonreactive material, such as NMT a few turns of wire helix, may be attached to dosage units that would otherwise float. An alternative sinker device is shown in *Figure 2a*. Other validated sinker devices may be used.

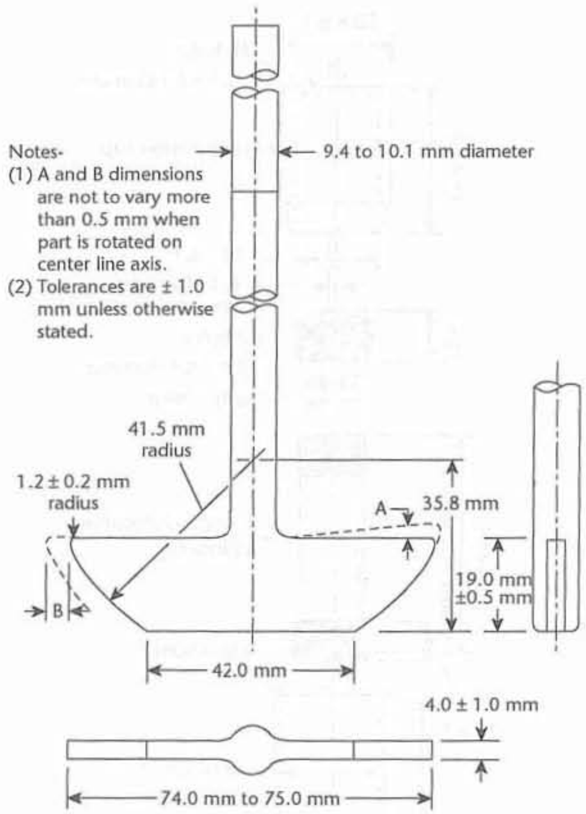

Figure 2. Paddle stirring element.

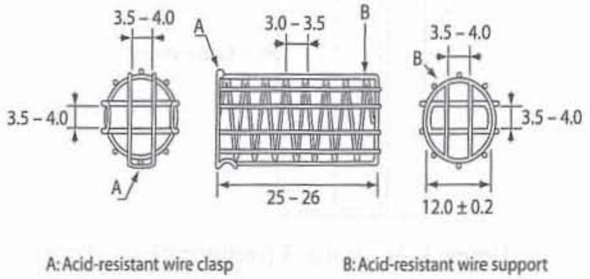

Figure 2a. Alternative sinker. All dimensions are expressed in mm.

Apparatus 3 (Reciprocating Cylinder)

NOT ACCEPTED BY THE JAPANESE PHARMACOPOEIA

The assembly consists of a set of cylindrical, flat-bottomed glass vessels; a set of glass reciprocating cylinders; inert fittings (stainless steel type 316 or other suitable material), and screens that are made of suitable nonsorbing and nonreactive material and that are designed to fit the tops and bottoms of the reciprocating cylinders; and a motor and drive assembly to reciprocate the cylinders vertically inside the vessels; if desired, index the reciprocating cylinders horizontally to a different row of vessels. The vessels are partially immersed in a suitable water bath of any convenient size that permits holding the temperature at 37 ± 0.5° during the test. No part of the assembly, including the environment in which the assembly is placed, contributes significant motion, agitation, or vibration beyond that due to the smooth, vertically reciprocating cylinder. A device is used that allows the reciprocation rate to be selected and maintained at the specified dip rate ◆given in the individual monograph◆ within ±5%. An apparatus that permits observation of the specimens and reciprocating cylinders is preferable. The vessels are provided with evaporation caps that remain in place for the duration of the test. The components conform to the dimensions shown in *Figure 3*, unless otherwise specified ◆in the individual monograph◆.

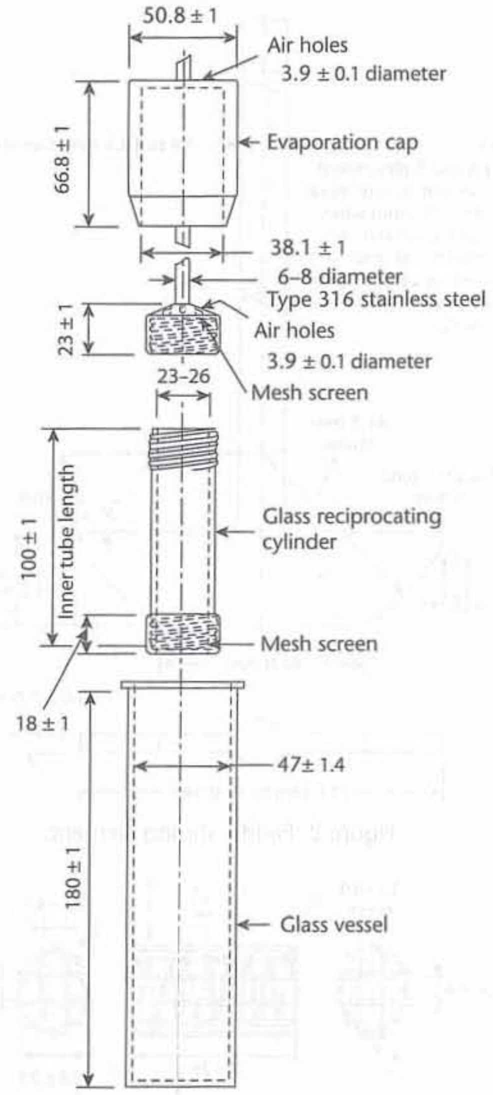

Figure 3. Apparatus 3 (reciprocating cylinder).

Apparatus 4 (Flow-Through Cell)

The assembly consists of a reservoir and a pump for the *Dissolution medium*; a flow-through cell; and a water bath that maintains the *Dissolution medium* at 37 ± 0.5°. Use the specified cell size •as given in the individual monograph•.

The pump forces the *Dissolution medium* upward through the flow-through cell. The pump has a delivery range between 240 and 960 mL/h, with standard flow rates of 4, 8, and 16 mL/min. It must deliver a constant flow (±5% of the nominal flow rate); the flow profile is sinusoidal with a pulsation of 120 ± 10 pulses/min. A pump without pulsation may also be used. Dissolution test procedures using a flow-through cell must be characterized with respect to rate and any pulsation.

The flow-through cell (see *Figure 4* and *Figure 5*), of transparent and inert material, is mounted vertically with a filter system (specified in the individual monograph) that prevents escape of undissolved particles from the top of the cell; standard cell diameters are 12 and 22.6 mm; the bottom cone is usually filled with small glass beads of about 1-mm diameter with one bead of about 5 mm, positioned at the apex to protect the fluid entry tube; and a tablet holder (see *Figure 4* and *Figure 5*) is available for positioning of special dosage forms, e.g., inlay tablets. The cell is immersed in a water bath, and the temperature is maintained at 37 ± 0.5°.

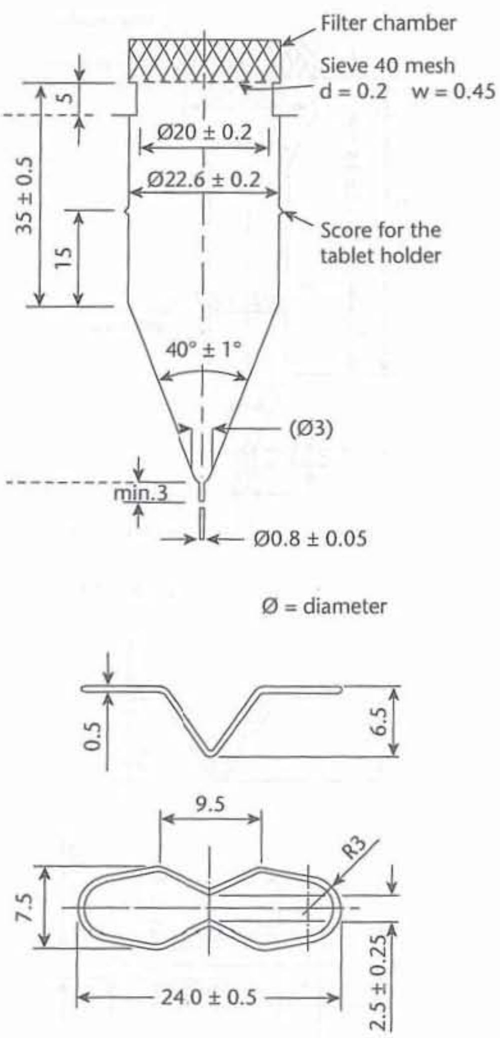

Figure 4. Apparatus 4: large cell for tablets and capsules (top); tablet holder for the large cell (bottom). (All measurements are expressed in mm unless noted otherwise.)

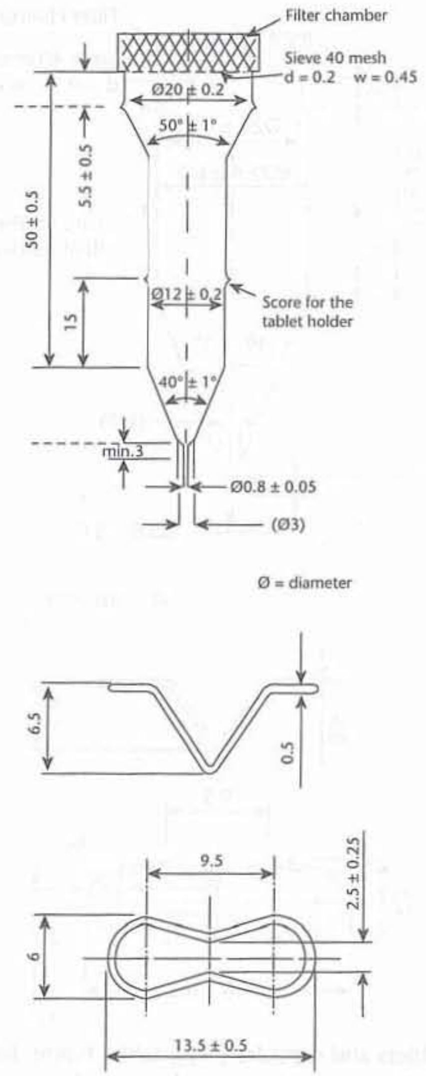

Figure 5. Apparatus 4: small cell for tablets and capsules (top); tablet holder for the small cell (bottom). (All measurements are expressed in mm unless noted otherwise.)

The apparatus uses a clamp mechanism and two O-rings to assemble the cell. The pump is separated from the dissolution unit to shield the latter against any vibrations originating from the pump. The position of the pump should not be on a level higher than the reservoir flasks. Tube connections are as short as possible. Use suitably inert tubing, such as polytef, with about a 1.6-mm inner diameter and chemically inert, flanged-end connections.

APPARATUS SUITABILITY

The determination of suitability of a test assembly to perform dissolution testing must include conformance to the dimensions and tolerances of the apparatus as given above. In addition, critical test parameters that have to be monitored periodically during use include volume and temperature of the *Dissolution medium*, rotation speed (*Apparatus 1* and *Apparatus 2*), dip rate (*Apparatus 3*), and flow rate of medium (*Apparatus 4*).

Determine the acceptable performance of the dissolution test assembly periodically.•The suitability for the individual apparatus is demonstrated by the *Performance verification test*.

USP Reference Standards 〈11〉: *USP Prednisone Tablets RS*

Performance verification test, Apparatus 1 and Apparatus 2: Test *USP Prednisone Tablets RS* according to the operating conditions specified. The apparatus is suitable if the results obtained are within the acceptable range stated in the technical data sheet specific to the lot used and the apparatus tested.

Performance verification test, Apparatus 3: [To come.]

Performance verification test, Apparatus 4: [To come.]•

PROCEDURE

Apparatus 1 and Apparatus 2

IMMEDIATE-RELEASE DOSAGE FORMS

Place the stated volume of the *Dissolution medium* (±1%) in the vessel of the specified apparatus •given in the individual monograph•, assemble the apparatus, equilibrate the *Dissolution medium* to 37 ± 0.5°, and remove the thermometer. Place 1 dosage unit in the apparatus, taking care to exclude air bubbles from the surface of the dosage unit, and immediately operate the apparatus at the specified rate •given in the individual monograph•. Within the time interval specified, or at each of the times stated, withdraw a specimen from a zone midway between the surface of the *Dissolution medium* and the top of the rotating basket or blade, NLT 1 cm from the vessel wall. [NOTE—Where multiple sampling times are specified, replace the aliquots withdrawn for analysis with equal volumes of fresh *Dissolution medium* at 37° or, where it can be shown that replacement of the medium is not necessary, correct for the volume change in the calculation. Keep the vessel covered for the duration of the test, and verify the temperature of the mixture under test at suitable times.] Perform the analysis •as directed in the individual monograph• using a suitable assay method.[3] Repeat the test with additional dosage form units.

If automated equipment is used for sampling or the apparatus is otherwise modified, verification that the modified apparatus will produce results equivalent to those obtained with the standard apparatus described in this general chapter is necessary.

Dissolution medium: A suitable dissolution medium is used. Use the solvent specified •in the individual monograph•. The volume specified refers to measurements made between 20° and 25°. If the *Dissolution medium* is a buffered solution, adjust the solution so that its pH is within 0.05 unit of the specified pH •given in the individual monograph•. [NOTE—Dissolved gases can cause bubbles to form, which may change the results of the test. If dissolved gases influence the dissolution results, dissolved gases should be removed before testing.[4]]

Time: Where a single time specification is given, the test may be concluded in a shorter period if the requirement for the minimum amount dissolved is met. Specimens are to be withdrawn only at the stated times, within a tolerance of ±2%.

•**Procedure for a pooled sample for immediate-release dosage forms:** Use this procedure where *Procedure for a Pooled Sample* is specified in the individual monograph. Proceed as directed for *Immediate-Release Dosage Forms* in *Apparatus 1 and Apparatus 2* in the *Procedure* section. Combine equal volumes of the filtered solutions of the six or twelve individual specimens withdrawn, and use the pooled sample as the test specimen. Determine the average amount of the active ingredient dissolved in the pooled sample.•

EXTENDED-RELEASE DOSAGE FORMS

Proceed as directed for *Immediate-Release Dosage Forms.*

Dissolution medium: Proceed as directed for *Immediate-Release Dosage Forms.*

Time: The test-time points, generally three, are expressed in hours.

DELAYED-RELEASE DOSAGE FORMS NOT ACCEPTED BY THE JAPANESE PHARMACOPOEIA

Use *Method A* or *Method B* and the apparatus specified •in the individual monograph•. All test times stated are to be observed within a tolerance of ±2%, unless otherwise specified.

Method A Procedure •(unless otherwise directed in the individual monograph)•

ACID STAGE

Place 750 mL of 0.1 N hydrochloric acid in the vessel, and assemble the apparatus. Allow the medium to equilibrate to a temperature of 37 ± 0.5°. Place 1 dosage unit in the apparatus, cover the vessel, and operate the apparatus at the specified rate •given in the monograph•.

After 2 h of operation in 0.1 N hydrochloric acid, withdraw an aliquot of the fluid, and proceed immediately as directed in the *Buffer Stage.*

Perform an analysis of the aliquot using a suitable assay method. •The procedure is specified in the individual monograph.•

---

[3] Test specimens are filtered immediately upon sampling unless filtration is demonstrated to be unnecessary. Use an inert filter that does not cause adsorption of the active ingredient or contain extractable substances that would interfere with the analysis.

[4] One method of deaeration is as follows: Heat the medium, while stirring gently, to about 41°, immediately filter under vacuum using a filter having a porosity of 0.45 µm or less, with vigorous stirring, and continue stirring under vacuum for about 5 min. Other validated deaeration techniques for removal of dissolved gases may be used.

General Chapters

BUFFER STAGE

[NOTE—Complete the operations of adding the buffer and adjusting the pH within 5 min.] With the apparatus operating at the rate specified •in the monograph,• add to the fluid in the vessel 250 mL of 0.20 M tribasic sodium phosphate that has been equilibrated to 37 ± 0.5°. Adjust, if necessary, with 2 N hydrochloric acid or 2 N sodium hydroxide to a pH of 6.8 ± 0.05. Continue to operate the apparatus for 45 min, or for the specified time •given in the individual monograph,•. At the end of the time period, withdraw an aliquot of the fluid, and perform the analysis using a suitable assay method. •The procedure is specified in the individual monograph. The test may be concluded in a shorter time period than that specified for the *Buffer Stage* if the requirement for the minimum amount dissolved is met at an earlier time.•

Method B Procedure •(unless otherwise directed in the individual monograph).

ACID STAGE

Place 1000 mL of 0.1 N hydrochloric acid in the vessel, and assemble the apparatus. Allow the medium to equilibrate to a temperature of 37 ± 0.5°. Place 1 dosage unit in the apparatus, cover the vessel, and operate the apparatus at the rate specified •in the monograph,•. After 2 h of operation in 0.1 N hydrochloric acid, withdraw an aliquot of the fluid, and proceed immediately as directed in the *Buffer Stage*.

Perform an analysis of the aliquot using a suitable assay method. •The procedure is specified in the individual monograph.•

BUFFER STAGE

[NOTE—For this stage of the procedure, use buffer that previously has been equilibrated to a temperature of 37 ± 0.5°.] Drain the acid from the vessel, and add to the vessel 1000 mL of pH 6.8 phosphate buffer, prepared by mixing 0.1 N hydrochloric acid with 0.20 M tribasic sodium phosphate (3:1) and adjusting, if necessary, with 2 N hydrochloric acid or 2 N sodium hydroxide to a pH of 6.8 ± 0.05. [NOTE—This may also be accomplished by removing from the apparatus the vessel containing the acid, then replacing it with another vessel containing the buffer, and transferring the dosage unit to the vessel containing the buffer.]

Continue to operate the apparatus for 45 min, or for the specified time •given in the individual monograph,•. At the end of the time period, withdraw an aliquot of the fluid, and perform the analysis using a suitable assay method. •The procedure is specified in the individual monograph. The test may be concluded in a shorter time period than that specified for the *Buffer Stage* if the requirement for minimum amount dissolved is met at an earlier time.•

Apparatus 3 (Reciprocating Cylinder)

NOT ACCEPTED BY THE JAPANESE PHARMACOPOEIA IMMEDIATE-RELEASE DOSAGE FORMS

Place the stated volume of the *Dissolution medium* in each vessel of the apparatus, assemble the apparatus, equilibrate the *Dissolution medium* to 37 ± 0.5°, and remove the thermometer. Place 1 dosage form unit in each of the six reciprocating cylinders, taking care to exclude air bubbles from the surface of each dosage unit, and immediately operate the apparatus as specified •in the individual monograph,•. During the upward and downward strokes, the reciprocating cylinder moves through a total distance of 9.9–10.1 cm. Within the time interval specified, or at each of the times stated, raise the reciprocating cylinders and withdraw a portion of the solution under test from a zone midway between the surface of the *Dissolution medium* and the bottom of each vessel. Perform the analysis as directed •in the individual monograph,•. If necessary, repeat the test with additional dosage-form units.

Dissolution medium: Proceed as directed for *Immediate-Release Dosage Forms* in *Apparatus 1 and Apparatus 2*.
Time: Proceed as directed for *Immediate-Release Dosage Forms* in *Apparatus 1 and Apparatus 2*.

EXTENDED-RELEASE DOSAGE FORMS

Proceed as directed for *Immediate-Release Dosage Forms* in *Apparatus 3*.
Dissolution medium: Proceed as directed for *Extended-Release Dosage Forms* in *Apparatus 1 and Apparatus 2*.
Time: Proceed as directed for *Extended-Release Dosage Forms* in *Apparatus 1 and Apparatus 2*.

DELAYED-RELEASE DOSAGE FORMS

Proceed as directed for *Delayed-Release Dosage Forms, Method B* in *Apparatus 1 and Apparatus 2*, using one row of vessels for the acid stage media and the following row of vessels for the buffer stage media, and using the volume of medium specified (usually 300 mL).
Time: Proceed as directed for *Immediate-Release Dosage Forms* in *Apparatus 1 and Apparatus 2*.

Apparatus 4 (Flow-Through Cell)

IMMEDIATE-RELEASE DOSAGE FORMS

Place the glass beads into the cell specified •in the monograph•. Place 1 dosage unit on top of the beads or, if specified •in the monograph•, on a wire carrier. Assemble the filter head, and fix the parts together by means of a suitable clamping device. Introduce by the pump the *Dissolution medium* warmed to 37 ± 0.5° through the bottom of the cell to obtain the flow rate specified •in the individual monograph• and measured with an accuracy of 5%. Collect the eluate by fractions at each of the times stated. Perform the analysis as directed •in the individual monograph•. Repeat the test with additional dosage form units.

Dissolution medium: Proceed as directed for *Immediate-Release Dosage Forms* in *Apparatus 1 and Apparatus 2*.

Time: Proceed as directed for *Immediate-Release Dosage Forms* in *Apparatus 1 and Apparatus 2*.

EXTENDED-RELEASE DOSAGE FORMS

Proceed as directed for *Immediate-Release Dosage Forms* in *Apparatus 4*.

Dissolution medium: Proceed as directed for *Immediate-Release Dosage Forms* in *Apparatus 4*.

Time: Proceed as directed for *Immediate-Release Dosage Forms* in *Apparatus 4*.

DELAYED-RELEASE DOSAGE FORMS

Proceed as directed for *Delayed-Release Dosage Forms* in *Apparatus 1 and Apparatus 2*, using the specified media.

Time: Proceed as directed for *Delayed-Release Dosage Forms* in *Apparatus 1 and Apparatus 2*.

Change to read:

INTERPRETATION

Immediate-Release Dosage Forms

Unless otherwise specified •in the individual monograph•, the requirements are met if the quantities of active ingredient dissolved from the dosage units tested conform to *Acceptance Table 1*. Continue testing through the three stages unless the results conform at either S_1 or S_2. The quantity, *Q*, is the amount of dissolved active ingredient •specified in the individual monograph•, expressed as a percentage of the labeled content of the dosage unit; the 5%, 15%, and 25% values in *Acceptance Table 1* are percentages of the labeled content so that these values and *Q* are in the same terms.

Acceptance Table 1

Stage	Number Tested	Acceptance Criteria
S_1	6	Each unit is NLT $Q + 5\%$.
S_2	6	Average of 12 units ($S_1 + S_2$) is $\geq Q$, and no unit is $<Q - 15\%$.
S_3	12	Average of 24 units ($S_1 + S_2 + S_3$) is $\geq Q$, NMT 2 units are $<Q - 15\%$, and no unit is $<Q - 25\%$.

•Immediate-Release Dosage Forms Pooled Sample

Unless otherwise specified in the individual monograph, the requirements are met if the quantities of active ingredient dissolved from the pooled sample conform to the accompanying *Acceptance Table for a Pooled Sample*. Continue testing through the three stages unless the results conform at either S_1 or S_2. The quantity, Q, is the amount of dissolved active ingredient specified in the individual monograph, expressed as a percentage of the labeled content.

Acceptance Table for a Pooled Sample

Stage	Number Tested	Acceptance Criteria
S_1	6	Average amount dissolved is NLT $Q + 10\%$.
●S_2● (ERR 1-Apr-2016)	6	Average amount dissolved ($S_1 + S_2$) is $\geq Q + 5\%$.
●S_3● (ERR 1-Apr-2016)	12	Average amount dissolved ($S_1 + S_2 + S_3$) is $\geq Q$.

•

Extended-Release Dosage Forms

Unless otherwise specified •in the individual monograph•, the requirements are met if the quantities of active ingredient dissolved from the dosage units tested conform to *Acceptance Table 2*. Continue testing through the three levels unless the results conform at either L_1 or L_2. Limits on the amounts of active ingredient dissolved are expressed in terms of the percentage of labeled content. The limits embrace each value of Q_i, the amount dissolved at each specified fractional dosing interval. Where more than one range is specified •in the individual monograph•, the acceptance criteria apply individually to each range.

Acceptance Table 2

Level	Number Tested	Criteria
L_1	6	No individual value lies outside each of the stated ranges, and no individual value is less than the stated amount at the final test time.
L_2	6	The average value of the 12 units ($L_1 + L_2$) lies within each of the stated ranges and is NLT the stated amount at the final test time; none is >10% of labeled content outside each of the stated ranges; and none is >10% of the labeled content below the stated amount at the final test time.
L_3	12	The average value of the 24 units ($L_1 + L_2 + L_3$) lies within each of the stated ranges and is NLT the stated amount at the final test time; NMT 2 of the 24 units are more than 10% of labeled content outside each of the stated ranges; NMT 2 of the 24 units are >10% of labeled content below the stated amount at the final test time; and none of the units are >20% of labeled content outside each of the stated ranges or >20% of the labeled content below the stated amount at the final test time.

Delayed-Release Dosage Forms

NOT ACCEPTED BY THE JAPANESE PHARMACOPOEIA

Acid stage: Unless otherwise specified •in the individual monograph•, the requirements of this portion of the test are met if the quantities, based on the percentage of the labeled content, of active ingredient dissolved from the units tested conform to *Acceptance Table 3*. Continue testing through all levels unless the results of both the *Acid stage* and *Buffer stage* conform at an earlier level.

Acceptance Table 3

Level	Number Tested	Criteria
A_1	6	No individual value exceeds 10% dissolved.
A_2	6	Average of the 12 units ($A_1 + A_2$) is NMT 10% dissolved, and no individual unit is >25% dissolved.
A_3	12	Average of the 24 units ($A_1 + A_2 + A_3$) is NMT 10% dissolved, and no individual unit is >25% dissolved.

Buffer stage: Unless otherwise specified •in the individual monograph•, the requirements are met if the quantities of active ingredient dissolved from the units tested conform to *Acceptance Table 4*. Continue testing through the three levels unless the results of both stages conform at an earlier level. The value of *Q* in *Acceptance Table 4* is 75% dissolved unless otherwise specified •in the individual monograph•. The quantity, *Q*, •specified in the individual monograph• is the total amount of active ingredient dissolved in both the *Acid stage* and the *Buffer stage*, expressed as a percentage of the labeled content. The 5%, 15%, and 25% values in *Acceptance Table 4* are percentages of the labeled content so that these values and *Q* are in the same terms.

Acceptance Table 4

Level	Number Tested	Criteria
B_1	6	Each unit is NLT Q + 5%.
B_2	6	Average of 12 units ($B_1 + B_2$) is ≥Q, and no unit is <Q − 15%.
B_3	12	Average of 24 units ($B_1 + B_2 + B_3$) is ≥Q, NMT 2units are <Q − 15%, and no unit is <Q − 25%.

〈721〉 DISTILLING RANGE

To determine the range of temperatures within which an official liquid distills, or the percentage of the material that distills between two specified temperatures, use Method I or Method II as directed in the individual monograph. The *lower limit* of the range is the temperature indicated by the thermometer when the first drop of condensate leaves the tip of the condenser, and the *upper limit* is the Dry Point, i.e., the temperature at which the last drop of liquid evaporates from the lowest point in the

distillation flask, without regard to any liquid remaining on the side of the flask, or the temperature observed when the proportion specified in the individual monograph has been collected.

NOTE—Cool all liquids that distill below 80° to between 10° and 15° before measuring the sample to be distilled.

METHOD I

Apparatus

Use apparatus similar to that specified for *Method II*, except that the distilling flask is of 50- to 60-mL capacity, and the neck of the flask is 10 to 12 cm long and 14 to 16 mm in internal diameter. The perforation in the upper insulating board, if one is used, should be such that when the flask is set into it, the portion of the flask below the upper surface of the insulating material has a capacity of 3 to 4 mL.

Procedure

Proceed as directed for *Method II*, but place in the flask only 25 mL of the liquid to be tested.

METHOD II

Apparatus

Use an apparatus consisting of the following parts:

DISTILLING FLASK

A round-bottom distilling flask, of heat-resistant glass, of 200-mL capacity, and having a total length of 17 to 19 cm, and an inside neck diameter of 20 to 22 mm. Attached about midway on the neck, approximately 12 cm from the bottom of the flask, is a side-arm 10 to 12 cm long and 5 mm in internal diameter, which forms an angle of 70° to 75° with the lower portion of the neck.

CONDENSER

A straight glass condenser 55 to 60 cm in length with a water jacket about 40 cm in length, or a condenser of other design having equivalent condensing capacity. The lower end of the condenser may be bent to provide a delivery tube, or it may be connected to a bent adapter that serves as a delivery tube.

INSULATING BOARDS

Two pieces of insulating board, 5 to 7 mm thick and 14 to 16 cm square, suitable for confining the heat to the lower part of the flask. Each board has a hole in its center, and the two boards differ only with respect to the diameter of the hole, i.e., the diameters are 4 cm and 10 cm, respectively. In use, the boards are placed one upon the other, and rest on a tripod or other suitable support, with the board having the larger hole on top.

RECEIVER

A 100-mL cylinder graduated in 1-mL subdivisions.

THERMOMETER

In order to avoid the necessity for an emergent stem correction, an accurately standardized, partial-immersion thermometer having the smallest practical subdivisions (not greater than 0.2°) is recommended. Suitable thermometers are available as the ASTM E-1 series 37C through 41C, and 102C through 107C (see *General Notices, 6.80.30. Temperature Reading Devices*). When placed in position, the stem is located in the center of the neck, and the top of the contraction chamber (or bulb, if 37C or 38C is used) is level with the bottom of the outlet to the side-arm.

HEAT SOURCE

A small Bunsen burner or an electric heater or mantle capable of adjustment comparable to that possible with a Bunsen burner.

Procedure

Assemble the apparatus, and place in the flask 100 mL of the liquid to be tested, taking care not to allow any of the liquid to enter the side-arm. Insert the thermometer, shield the entire burner and flask assembly from external air currents, and apply heat, regulating it so that between 5 and 10 minutes elapse before the first drop of distillate falls from the condenser. Continue the distillation at a rate of 4 to 5 mL of distillate per minute, collecting the distillate in the receiver. Note the temperature when the first drop of distillate falls from the condenser, and again when the last drop of liquid evaporates from the bottom of the flask or when the specified percentage has distilled over. Unless otherwise specified in the individual monograph, apply when necessary the emergent stem correction and report the temperatures adjusting the barometric pressure by the following formula:

$$t = t_0 + [(t_0 10^{-4} + 0.033)(760 - p)]$$

in which t is the corrected boiling temperature, in Celsius scale; t_0 is the measured boiling temperature, in Celsius scale; and p is the barometric pressure at the time of measurement, in mm Hg.

⟨724⟩ DRUG RELEASE

SCOPE

This test is provided to determine compliance with drug release or dissolution requirements where stated in the individual monographs for transdermal systems (TDS) and other dosage forms. From the types of apparatus described herein, use the one specified in the individual monograph.

GENERAL DRUG RELEASE STANDARDS

Apparatus 5 (Paddle over Disk)

APPARATUS

Use the paddle and vessel assembly from *Apparatus 2* as described in *Dissolution* ⟨711⟩, with the addition of a disk assembly designed to hold the TDS at the bottom of the vessel. This disk assembly is designed to minimize any "dead" volume between the assembly and the bottom of the vessel. The disk assembly holds the TDS flat and is positioned such that the release surface is parallel with the bottom of the paddle blade (see *Figure 1a*, *Figure 1b*, and *Figure 1c*). A distance of 25 ± 2 mm between the paddle blade and the surface of the disk assembly is maintained during the test. Other appropriate devices may be used (see *Figure 2*), provided they do not sorb, react with, or interfere with the specimen being tested.

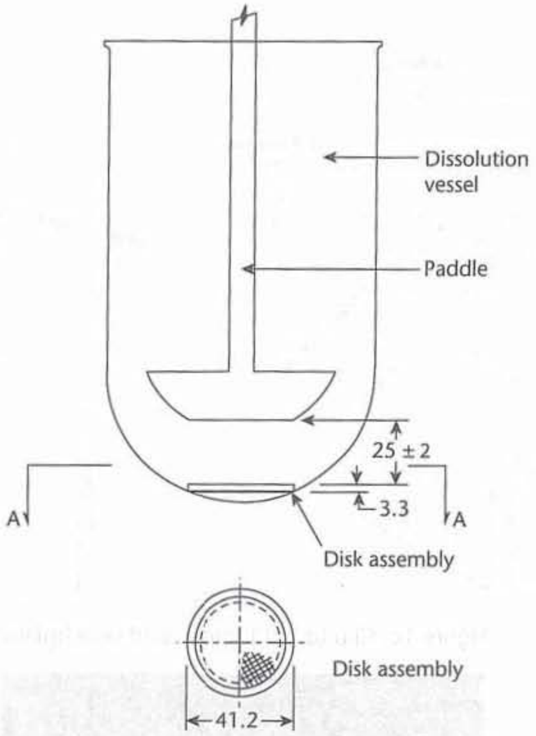

Figure 1a. Paddle over disk.
(All measurements are expressed in mm unless noted otherwise.)

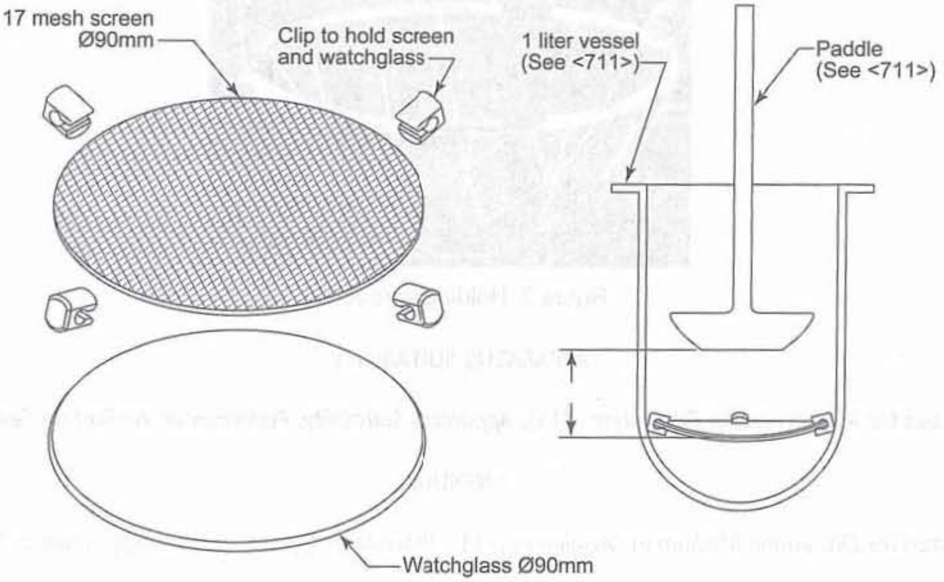

Figure 1b. Paddle over disk (screen and watchglass).

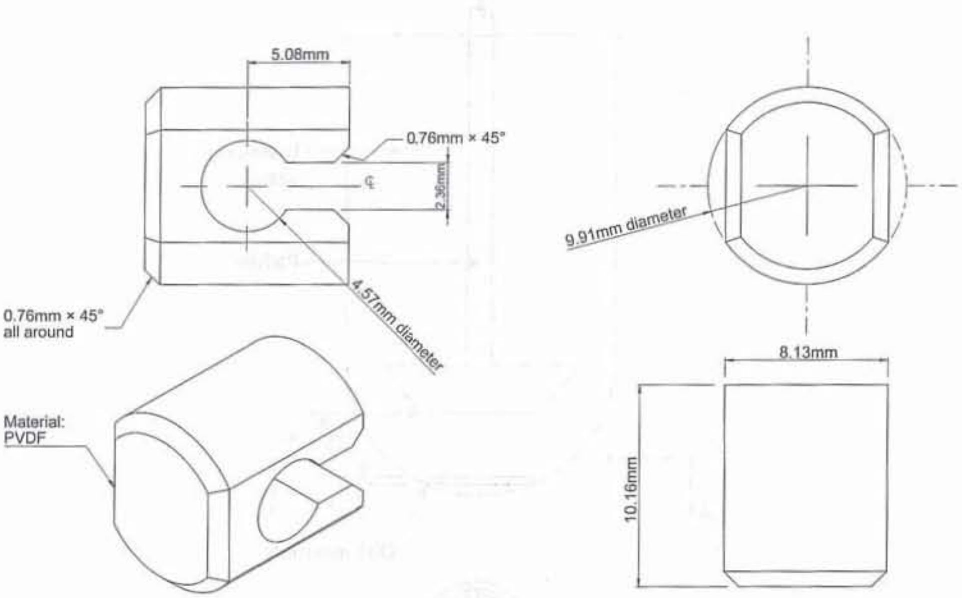

Figure 1c. Clip to hold screen and watchglass.

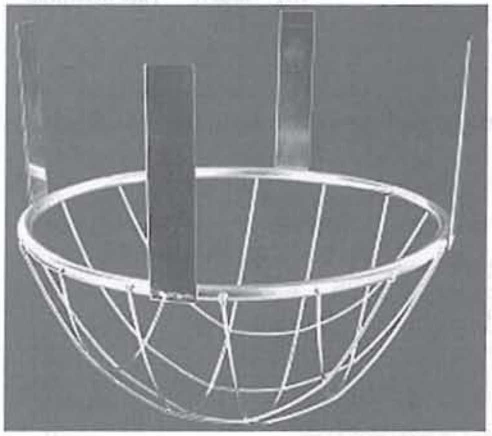

Figure 2. Holding wire screen.

APPARATUS SUITABILITY

Proceed as directed for *Apparatus 2* in *Dissolution* ⟨711⟩, *Apparatus Suitability, Performance Verification Test, Apparatus 1 and 2.*

MEDIUM

Proceed as directed for *Dissolution Medium* in *Dissolution* ⟨711⟩, *Procedure, Apparatus 1 and Apparatus 2, Immediate-Release Dosage Forms.*

PROCEDURE

Place the stated volume of *Medium* in the vessel, and equilibrate to 32 ± 0.5°.

Apply the TDS to the disk assembly, assuring that the release surface is as smooth as possible and the TDS is completely and firmly attached to the disk. The TDS, with release surface side up, may be attached to the disk by an appropriate and validated procedure such as use of an adhesive, double-face adhesive tape, screen, or membrane. Care must be taken to avoid the presence of air bubbles between the membrane, if used, and the TDS, or the presence of wrinkles on the surface of the TDS. Carefully remove the protective liner from the TDS without causing damage to the surface of the TDS.

Place the disk assembly flat at the bottom of the vessel with the release surface facing up and parallel to the edge of the paddle blade and surface of the *Medium.* Ensure that the surface of the TDS is devoid of air bubbles. The bottom edge of the paddle is 25 ± 2 mm from the surface of the disk assembly. The vessel may be covered during the test to minimize evaporation.

Immediately operate the apparatus at the rate specified in the monograph.

At each sampling time interval, withdraw a specimen from a zone midway between the surface of the *Medium* and the top of the blade, not less than 1 cm from the vessel wall.

Perform the analysis on each sample aliquot as directed in the individual monograph, correcting for any volume losses, as necessary. Repeat the test with additional TDS as needed.

TIME

The test time points, at least three, are expressed in hours. Specimens are to be withdrawn within a tolerance of ±15 min or ±2% of the stated time, selecting the tolerance that results in the narrowest time interval.

INTERPRETATION

Unless otherwise specified in the individual monograph, the requirements are met if the quantities of active ingredient released from the system conform to *Acceptance Table 1* below. Continue testing through the three levels unless the results conform at either L_1 or L_2.

Acceptance Table 1

Level	Number Tested	Criteria
L_1	6	No individual value lies outside the stated range.
L_2	6	The average value of the 12 units ($L_1 + L_2$) lies within the stated range. No individual value is outside the stated range by more than 10% of the average of the stated range.
L_3	12	The average value of the 24 units ($L_1 + L_2 + L_3$) lies within the stated range. Not more than 2 of the 24 units are outside the stated range by more than 10% of the average of the stated range; and none of the units is outside the stated range by more than 20% of the average of the stated range.

Apparatus 6 (Cylinder)

APPARATUS

Use the vessel assembly as described in *Dissolution* (711), *Apparatus, Apparatus 1 (Basket Apparatus)*, except replace the basket and shaft with a stainless steel cylinder stirring element with the specifications shown in *Figure 3*. This cylinder stirring element is composed of two parts, one comprising the shaft and the upper cylinder, and the other being the extension cylinder. Since both parts are serially numbered, it is recommended that they be kept paired because the friction fitting is done individually for each cylinder, allowing a very tight fit. The distance between the inside bottom of the vessel and the cylinder is maintained at 25 ± 2 mm during the test.

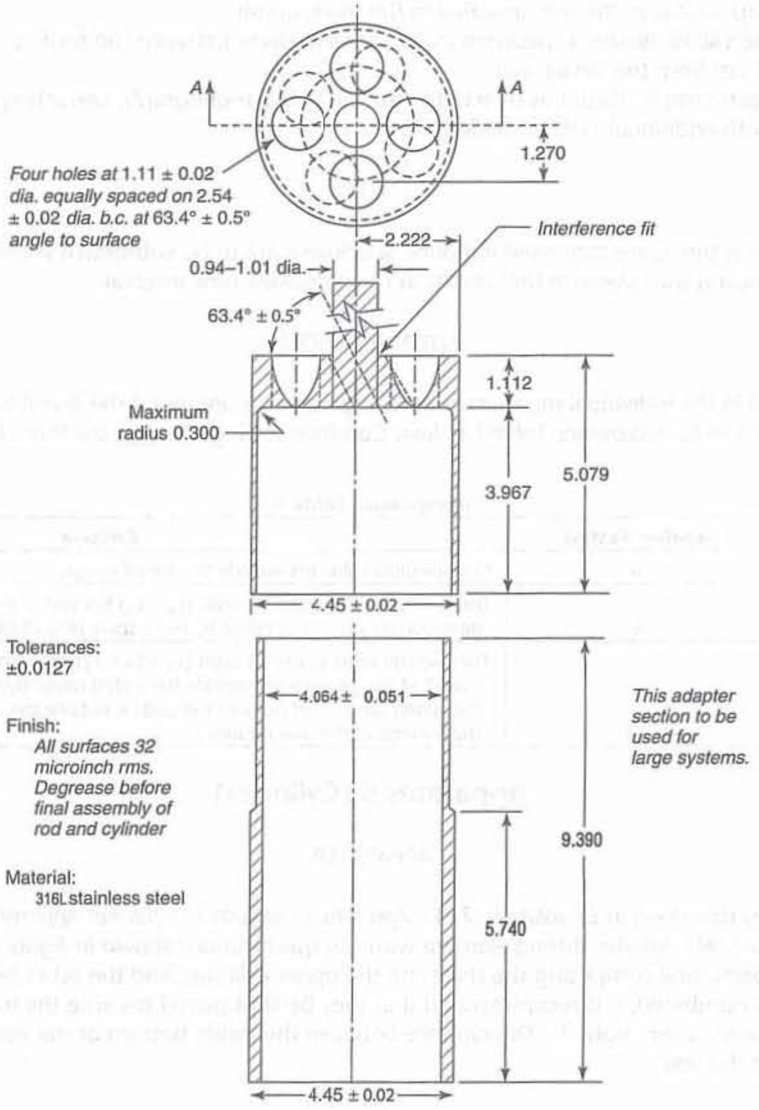

Figure 3. Cylinder stirring element.
(All measurements are expressed in cm unless noted otherwise.)

MEDIUM

See *Dissolution Medium* in *Dissolution* 〈711〉, *Procedure, Apparatus 1 and Apparatus 2, Immediate-Release Dosage Forms.*

PROCEDURE

Place the stated volume of *Medium* in the vessel, and equilibrate to 32 ± 0.5°.

Apply the TDS to the cylinder, assuring that the release surface is as smooth as possible and the TDS is completely and firmly attached to the cylinder. The TDS, with release side facing the *Medium*, may be attached to the cylinder by an appropriate and validated procedure such as use of an adhesive, double-face adhesive tape, membrane, or nylon net. Care must be taken to avoid the presence of air bubbles between the membrane, if used, and the TDS, or the presence of wrinkles on the surface of the TDS. Carefully remove the protective liner from the TDS without causing damage to the surface. If additional reinforcement of the TDS to the cylinder is needed, inert metal wire or a polymer ring may be used.

Place the cylinder in the apparatus, and immediately rotate at the rate specified in the individual monograph. The vessel may be covered during the test to minimize evaporation.

At each sampling time interval, withdraw a specimen from a zone midway between the surface of the *Medium* and the top of the rotating cylinder, not less than 1 cm from the vessel wall.

Perform the analysis on each sample aliquot as directed in the individual monograph, correcting for any volume losses, as necessary. Repeat the test with additional TDS, as needed.

TIME

The test time points, at least three, are expressed in hours. Specimens are to be withdrawn within a tolerance of ±15 min or ±2% of the stated time, selecting the tolerance that results in the narrowest time interval.

INTERPRETATION

Unless otherwise specified in the individual monograph, the requirements are met if the quantities of active ingredient released from the system conform to *Acceptance Table 1* above. Continue testing through the three levels unless the results conform at either L_1 or L_2.

Apparatus 7 (Reciprocating Holder)

APPARATUS

The assembly consists of (1) a set of volumetrically calibrated or tared solution containers made of glass or other suitable inert material that should not sorb, react with, or interfere with the specimen being tested; (2) a motor and drive assembly to reciprocate the system vertically and to index the system horizontally to a different row of vessels, automatically if desired; and (3) a set of suitable sample holders (see *Figure 4* and *Figures 5a, 5b, 5c,* and *5d*).

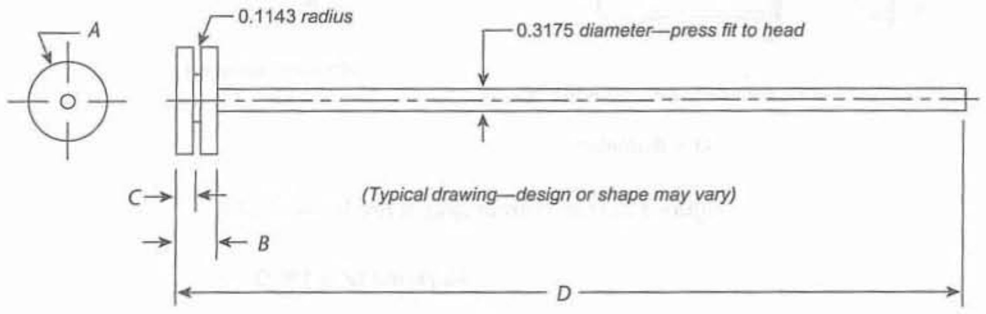

Dimensions are in centimeters.

	HEAD				ROD		O-RING
System[a]	*A (Diameter)*	*B*	*C*	Material[b]	*D*	Material[c]	*(not shown)*
1.6 cm²	1.428	0.9525	0.4750	SS/VT	30.48	SS/P	Parker 2–113–V884–75
2.5 cm²	1.778	0.9525	0.4750	SS/VT	30.48	SS/P	Parker 2–016–V884–75
5 cm²	2.6924	0.7620	0.3810	SS/VT	8.890	SS/P	Parker 2–022–V884–75
7 cm²	3.1750	0.7620	0.3810	SS/VT	30.48	SS/P	Parker 2–124–V884–75
10 cm²	5.0292	0.6350	0.3505	SS/VT	31.01	SS/P	Parker 2–225–V884–75

[a] Typical system sizes.
[b] SS/VT=Either stainless steel or virgin Teflon.
[c] SS/P=Either stainless steel or Plexiglas.

Figure 4. Reciprocating disk sample holder.

General Chapters

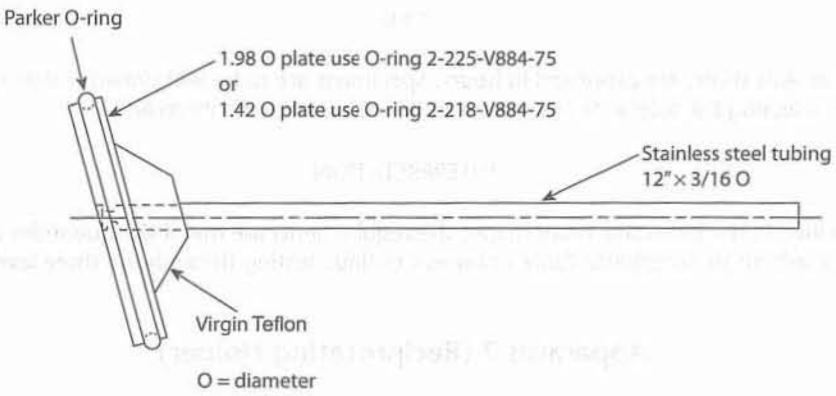

Figure 5a. Transdermal system holder—angled disk.

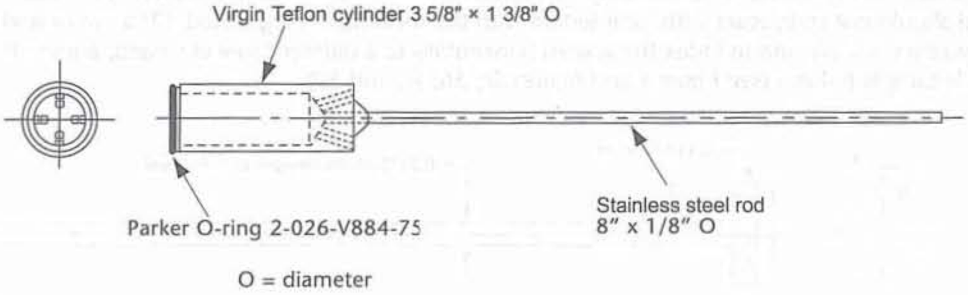

Figure 5b. Transdermal system holder—cylinder.

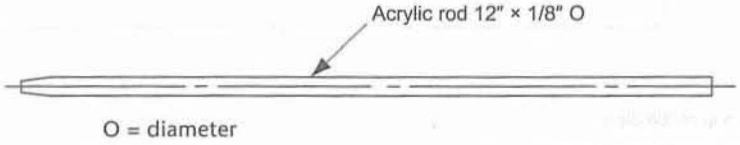

Figure 5c. Oral extended-release tablet holder—rod, pointed for gluing.

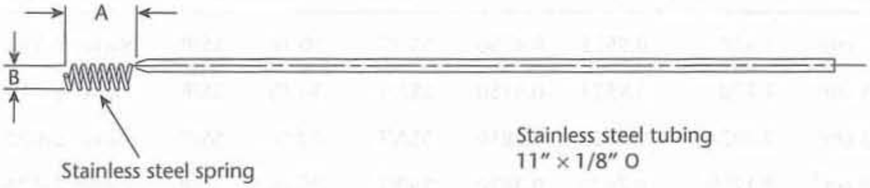

Stainless Steel Spring Dimensions

A	B
1.45	.58 O
1.40	.31 O
.96	.33 O
.60	.25 O

O = diameter

Figure 5d. Oral extended-release tablet holder—spring holder.

During the test, the solution containers are partially immersed in a suitable water bath of any convenient size that permits maintaining the temperature inside the containers at 32 ± 0.5° for TDS or at 37 ± 0.5° for other dosage forms during the test.

No part of the assembly, including the environment in which the assembly is placed, contributes significant motion, agitation, or vibration beyond that due to the smooth, vertically reciprocating sample holder.

Apparatus that permits observation of the system and holder during the test is preferable.

Use the size container and sample holder as specified in the individual monograph.

MEDIUM

See *Dissolution Medium* in *Dissolution* ⟨711⟩, *Procedure, Apparatus 1 and Apparatus 2, Immediate-Release Dosage Forms.*

SAMPLE PREPARATION A (FOR OSMOTIC PUMP TABLETS)

Attach each unit to be tested to a suitable holder by an appropriate and validated procedure such as use of an adhesive to adhere the edge of the tablet to a holder (e.g., *Figure 5c*), the spring holder (*Figure 5d*), a small nylon net bag, or a membrane.

SAMPLE PREPARATION B (FOR TDS)

Apply the TDS to the appropriate holder, assuring that the release surface is as smooth as possible and the TDS is completely and firmly attached to the holder. The TDS, with release side facing the *Medium*, may be attached to the holder by an appropriate and validated procedure such as use of an adhesive, double-face adhesive tape, membrane, or nylon net. Care must be taken to avoid the presence of air bubbles between the membrane, if used, and the TDS, or the presence of wrinkles on the surface of the TDS. Carefully remove the protective liner from the TDS without causing damage to the surface of the TDS. If additional reinforcement of the TDS to the holder is needed, inert metal wire or a polymer ring may be used.

SAMPLE PREPARATION C (FOR OTHER DOSAGE FORMS)

Attach each dosage form to be tested to a suitable holder.

PROCEDURE

Place the stated volume of *Medium* in the solution containers, and equilibrate to the test temperature.
Suspend each prepared sample holder from a vertically reciprocating shaker such that each system is continuously immersed in *Medium* during the entire test.
Reciprocate at a frequency of about 30 cycles/min with an amplitude of about 2 cm, or as specified in the individual monograph, for the specified time.
At each sampling time interval, remove the solution containers from the bath, cool to room temperature, and add sufficient solvent (i.e., water in most cases) to correct for evaporative losses.
Perform the analysis on each sample as directed in the individual monograph. Repeat the test with additional transdermal systems, as needed.

TIME

The test time points, at least three, are expressed in hours. Specimens are to be withdrawn within a tolerance of ±15 min or ±2% of the stated time, selecting the tolerance that results in the narrowest time interval.

INTERPRETATION

Unless otherwise specified in the individual monograph, the requirements are met if the quantities of active ingredient released from the TDS conform to *Acceptance Table 1* above, or the appropriate acceptance table in *Dissolution* ⟨711⟩ for other dosage forms. Continue testing through the three levels unless the results conform at either L_1 or L_2.

⟨729⟩ GLOBULE SIZE DISTRIBUTION IN LIPID INJECTABLE EMULSIONS

INTRODUCTION

Lipid injectable emulsions for intravenous administration are sterile oil-in-water emulsions of soybean oil, used to provide an ample supply of essential fatty acids, linoleic and linolenic, dispersed with the aid of an emulsifying agent in *Water for Injection*. Alternatively, soybean oil can be mixed with other suitable oils (neutral triglycerides), such as safflower oil, medium-chain triglycerides (MCT) derived from coconut or palm kernel oils, olive oil, or a marine oil, such as menhaden oil. The size of the lipid droplets is critical: because of mechanical filtration, larger-size fat globules (>5 µm) can be trapped in the lungs. The essential size characteristics of a lipid injectable emulsion for intravenous use include the mean diameter of the lipid droplets and the range of the various droplet diameters distributed around the mean diameter, expressed as the standard deviation. In particu-

lar, the amounts of fat globules comprising the large-diameter tail of the globule size distribution are especially important with respect to infusion safety. These two regions of the globule size distribution (mean droplet size and large-diameter tail) must be controlled within specified limits.

The two methods described below are used for determination of the mean lipid droplet diameter and the distribution of large-diameter globule sizes in lipid injectable emulsions. *Method I* and *Method II* must be validated. The methods described below to assess the quality of lipid injectable emulsions are to be performed in two stages.

METHOD I—LIGHT-SCATTERING METHOD

For the determination of the mean droplet size of lipid injectable emulsions, either of two common light-scattering techniques may be employed: (1) dynamic light scattering (DLS), also known as photon correlation spectroscopy (PCS), or (2) classical light scattering, based on Mie scattering theory. The DLS, or PCS, technique is based on analyzing the rapid temporal fluctuations in the scattered light intensity that occur due to the random Brownian motion, or diffusion, of any particles, including lipid droplets, suspended in liquid. The intensity is measured at a given angle (usually 90°) by a suitable detector (e.g., photomultiplier tube) able to measure the rapidly fluctuating scattered light intensity produced by the suspended, diffusing droplets. These scattered intensity data are typically used to calculate the intensity autocorrelation function, which is a simple decaying exponential function in time for droplets of uniform size. A distribution of droplet sizes expresses itself by exponential functions of different decay times. The autocorrelation function generated by the scattered intensity data obtained from a given emulsion can be "inverted" by means of an appropriate deconvolution algorithm in order to obtain the approximate distribution of intensity-weighted diffusion coefficients. From the latter, the distribution of small-diameter droplets is calculated, using the Stokes-Einstein equation and the rules of classical (Mie) light scattering.

By contrast, classical light scattering based on Mie theory analyzes the spatial, rather than temporal, variation of the scattered light intensity by measuring the latter as a function of the scattering angle, typically over a large range of detected angles. The temporal fluctuations in the scattering intensity due to Brownian motion are averaged out in time for each angular measurement. This angular variation occurs as a consequence of the mutual interference of individual scattered waves arriving at the detector with different phases from different points within a given lipid droplet, as well as from different particles. The extent of the angular variation is significant whenever the droplet diameter is not small compared with the wavelength of the laser light (typically 635 nm). Droplets of a given size and refractive index yield a unique curve of scattering intensity vs. angle. A distribution of droplet sizes gives rise to a final angular dependence that represents the superposition, or summation, of individual (different) intensity vs. angle curves. The measured angular dependence of the scattering intensity obtained from a given emulsion sample can be inverted by means of an appropriate deconvolution algorithm and Mie scattering theory in order to obtain the approximate droplet size distribution.

Thus, light scattering, using either dynamic light scattering (i.e., temporal fluctuations due to droplet diffusion) or classical light scattering/Mie theory (i.e., average intensity vs. angle), can provide acceptable results for both the mean diameter and standard deviation of the droplet size distribution. For purposes of illustrating the method used in *Method I*, a dynamic light-scattering technique is described. For guidance regarding instruments employing classical Mie-theory light scattering, see *Light Diffraction Measurement of Particle Size* 〈429〉.

Apparatus

A suitable DLS/PCS instrument with or without the capability of automatic sample dilution is controlled by validated software and is used to perform the measurement, with the scattering angle typically set at 90°. The intensity-weighted results (mean diameter and standard deviation) are reported, provided it is clearly stated which values are given and that the necessary parameter values required for all requisite calculations are also given.

Water

Pass distilled water through a filter of 0.2-µm pore size, and degas by sonication, or use *Sterile Water for Injection* stored in a glass container.

Standard Preparation

To a pre-established volume of *Water* add an appropriate amount of concentrated suspension, containing NIST-traceable polystyrene latex standard particles or other suitable nanospheres. Gently mix the fluids to achieve a homogeneous suspension. The diluted suspension will be slightly turbid in appearance. If the DLS/PCS instrument is equipped with an automatic dilution system, the starting concentrated sample can be analyzed by injection directly into the instrument via a syringe, with further dilution occurring automatically to optimize the droplet concentration for analysis. Alternatively, the sample would require greater manual dilution with *Water* (typically by at least a factor of 10 over the first dilution), and then this sample would be instilled into a "drop-in" cuvette. The optimum dilution scheme that achieves the proper scattering intensity for the cuvette-based analysis will be determined by the instrument specifications. Thus, the concentration of latex in the final sample

must be optimized for the DLS/PCS instrument used. This should be performed separately for three different size standards of approximately 100, 250, and 400 nm (triplicate analyses per size), and the corresponding results of intensity-weighted mean diameter and standard deviation should coincide with the expected values within acceptable errors.

Test Preparation

To a pre-established volume of water add an appropriate volume of sample from the lipid injectable emulsion. Gently mix the fluids to achieve a homogeneous suspension. The diluted suspension will be slightly turbid in appearance. If the DLS/PCS instrument is equipped with an automatic dilution system, the starting concentrated sample can be analyzed by injection directly into the instrument via a syringe. Further dilution of the sample then occurs automatically to optimize the droplet concentration for analysis, ensuring that it is not so high as to cause artifacts due to multiple scattering or interdroplet interactions. Alternatively, the sample would require greater manual dilution with *Water* (typically by at least a factor of 10 over the first dilution), and then this sample would be instilled into a "drop-in" cuvette. The optimum dilution scheme that achieves the proper scattering intensity for the cuvette-based analysis will be determined by the instrument specifications. Thus, the concentration of lipid injectable emulsion in the final sample must be optimized for the DLS/PCS instrument used.

System Suitability

Using the *Standard Preparation,* measure the intensity-weighted mean particle diameter and the corresponding standard deviation. The system is suitable once the sample temperature has reached equilibration and the results have stabilized and triplicate mean droplet diameter measurements are obtained. The coefficient of variation (CV) should not exceed 10% of the NIST-traceable mean droplet diameter. A larger CV value indicates that the latex microspheres are not suitable as a standard because they either inherently lack uniformity or have become agglomerated to an unacceptable extent. In this case, another standard latex suspension must be selected and tested.

Procedure and Interpretation

If the DLS/PCS instrument is equipped with an automatic dilution system, use a disposable syringe to load the *Standard Preparation* or *Test Preparation*. If no automatic dilution system is used, transfer the appropriately diluted preparation to a cuvette, and place the cuvette in the spectrometer. Allow the sample to equilibrate to a preset controlled temperature close to ambient (between 20° and 25°, as in the USP definition found in ⟨659⟩ *Packaging and Storage Requirements*). Set the instrument scattering angle to 90°, and carry out the measurements. As long as the chi-square (χ^2) goodness-of-fit parameter remains acceptably low (per instrument specifications), the results for the *Test Preparation* are acceptable. Excessive values of the χ^2 parameter suggest that the droplet distribution is not normal and may indicate an unstable emulsion. The intensity-weighted mean droplet diameter (MDD) for lipid injectable emulsions must be less than 500 nm or 0.5 µm, irrespective of the concentration of the dispersed lipid phase.

METHOD II—MEASUREMENT OF LARGE GLOBULE CONTENT BY LIGHT OBSCURATION OR EXTINCTION METHOD

For determination of the extent of the large-diameter droplet tail (>5 µm) of lipid injectable emulsions, a light obscuration (LO) or light extinction (LE) method that employs a single-particle (globule) optical sizing (SPOS) technique is used. During application of the LE/SPOS technique, passage of a droplet through a thin optical sensing zone results in blockage of a portion of the incident light beam, causing a momentary decrease in the light intensity reaching the "extinction" detector. The magnitude of this decrease in the signal is ideally proportional to the cross-sectional area of the droplet (assumed smaller than the sensing zone thickness), i.e., to the square of the droplet diameter. During optimization of the LE/SPOS instrument for a given emulsion sample, a series of dilutions should be tested to achieve consistency between samples. The goal is to identify a standard range of dilutions that yield consistent data and are most applicable to the formulation tested. Ideally, when comparing different emulsions, the same approximate number of globules are sized each time, and once a standard is achieved, it should be incorporated into the routine sampling plan for validation testing. As long as the fat globule concentration is below the "coincidence limit" of the sensor (determined by the flow cell and optical design), only one globule at most will pass through the sensing zone at any given time, allowing it to be counted and accurately sized (with less than 1% coincidence events). Both the coincidence limit and the optimal flow rate must be known for the LE/SPOS sensor used. Furthermore, it is prudent to perform the large-diameter measurements at a reduced emulsion concentration such that the measurable droplet concentration at threshold of detection (e.g., >1.8 µm) to an upper limit (e.g., 50 µm) is only approximately one-third of the nominal coincidence limit for the sensor used. The resulting single pulse heights are converted to droplet diameters using a standard calibration curve previously constructed from NIST-traceable monosized polystyrene microspheres of known diameters. For additional guidance in the use of the light obscuration methodology, see the general chapter *Particulate Matter in Injections* ⟨788⟩.

Apparatus

A suitable light obscuration instrument with or without the capability of automatic sample dilution and controlled by a personal computer (PC) is used for the measurement. The number- and volume-weighted particle size distribution data are reported, provided that it is clearly stated which values are given and that the necessary parameter values required for all necessary calculations are also given.

Water

Pass distilled water through a filter of 0.2-µm pore size, or use *Sterile Water for Injection* stored in a glass container.

Standard Preparation

To a pre-established volume of *Water* add an appropriate amount of concentrated suspension, containing NIST-traceable polystyrene latex standard particles or other suitable microspheres. Gently mix the fluids to achieve a homogeneous suspension. If the light obscuration instrument is equipped with an automatic dilution system, the starting concentrated sample can be analyzed by injection directly into the instrument via a syringe or Teflon sample line. Further dilution of the sample then occurs automatically to optimize the particle concentration for analysis. Alternatively, the sample would require greater manual dilution with water (typically by at least a factor of 10 over the first dilution). The resulting diluted sample is then instilled in an appropriate, clean container, such as a sterile Type I glass container, before being passed through the sensor. In either case the final particle concentration is caused to lie below the coincidence limit of the sensor. The sizing and counting accuracy of the light obscuration instrument should be obtained using two different size standards of approximately 5 and 10 µm (triplicate analyses per size). For the standards after system calibration, set the instrument threshold of detection at 1.8 µm, extended to an upper limit of 50 µm. The corresponding results for the mean diameter should coincide with the expected values, within 10% of the relative standard deviation and 90%–110% size accuracy. In addition, the number of particle counts obtained per mL should also agree within ±10% with the concentration values certified in the documentation provided with each NIST-traceable size standard.

General Chapters

Test Preparation

To a pre-established volume of water add an appropriate volume of sample from the lipid injectable emulsion (triplicate analyses per sample). Gently mix the fluids to achieve a homogeneous suspension. The diluted emulsion will be slightly turbid in appearance. If the light obscuration instrument is equipped with an automatic dilution system, the starting concentrated sample can be analyzed by injection directly into the instrument via a syringe or nonreactive* Teflon sample line. Further dilution then occurs automatically to optimize the droplet/globule concentration for analysis. Alternatively, the sample would require greater manual dilution with water (typically by at least a factor of 10 over the first dilution). The resulting diluted sample is then instilled in an appropriate, clean container such as a sterile Type I glass container. In either case the final droplet/globule concentration is caused to lie below the coincidence limit of the sensor.

System Suitability

Perform prior to the test procedure, using the *Standard Preparation* of a 5- and 10-µm NIST-traceable particle. Measure in triplicate the number-weighted particle diameter and the counts/mL of the standard. The system is suitable when the triplicate mean number-weighted particle diameter measurements are within 10% of the target value, both in terms of repeatability (CV) and closeness to the certified size on the label of the NIST-traceable standard.

Procedure and Interpretation

If the light obscuration instrument is equipped with an automatic dilution system, use a disposable syringe or Teflon sample line to load the *Standard Preparation* or *Test Preparation.* If no automatic dilution system is used, transfer the sample to an appropriate large-volume, clean container such as a sterile Type I glass vessel containing an appropriate volume of water. Allow the sample and water to mix thoroughly to achieve a homogeneous suspension. Set the instrument threshold of detection at 1.8 µm, extended to an upper limit of 50 µm, and vary the concentration and/or data collection times such that there is at least a factor of two in the difference of the total number of globules that measure >5 µm between at least two sample runs. In any case, the number of globules that measure >5 µm should be large enough so that it represents an adequate number of globules that are statistically representative of the large-diameter tail population of the native emulsion. The volume-weighted,

* Polyvinyl chloride (PVC) with diethylhexylphthalate (DEHP) has been shown to induce breakdown of lipid injectable emulsions (Drug Product Problem Reporting System. USP File Access No. 11173, May 15, 1991).

large-diameter fat globule limits of the dispersed phase, expressed as the percentage of fat residing in globules larger than 5 µm (PFAT5) for a given lipid injectable emulsion, must not exceed 0.05%.

⟨730⟩ PLASMA SPECTROCHEMISTRY

INTRODUCTION

Plasma-based instrumental techniques, which are useful for pharmaceutical analyses, fall into two major categories: those based on the inductively coupled plasma, and those where a plasma is generated at or near the surface of the sample. The inductively coupled plasma (ICP) is a high-temperature excitation source that desolvates, vaporizes, and atomizes aerosol samples and ionizes the resulting atoms. The excited analyte ions and atoms can then subsequently be detected by observing their emission lines, a method termed inductively coupled plasma–optical emission spectroscopy (ICP–OES; also referred to as inductively coupled plasma–atomic emission spectroscopy), or the excited or ground state ions can be determined by a technique known as inductively coupled plasma–mass spectrometry (ICP–MS). ICP–OES and ICP–MS may be used for either single- or multi-element analysis and used for either sequential or simultaneous analyses with good sensitivity over an extended linear range.

For additional information and discussion of the theory and principles of measurements, see *Plasma Spectrochemistry—Theory and Practice* ⟨1730⟩.

QUALIFICATION OF PLASMA SPECTROPHOTOMETERS

Qualification of the ICP–OES or the ICP–MS can be divided into three elements: installation qualification (IQ), operational qualification (OQ), and performance qualification (PQ)—see also the general chapter *Analytical Instrument Qualification* ⟨1058⟩.

Installation Qualification

The IQ requirements provide evidence that the hardware and software are properly installed in the desired location, and that the environment, in which the instrument will be used, is adequate.

Operational Qualification

The purpose of OQ is to demonstrate that instrument performance is suitable. In OQ, an instrument's performance is characterized using standards of known spectral properties to verify that the system operates within target specifications. OQ is a check of the key operational parameters performed after installation and after repairs and/or maintenance. Instrument vendors often have samples and test parameters available as part of the IQ/OQ package.

Performance Qualification

PQ determines whether the instrument is capable of meeting the user's requirements for all the parameters that may affect the quality of the measurement. Depending on typical use, the specifications for PQ may be different from the manufacturer's specifications. For validated methods, specific PQ tests, also known as system suitability tests, can be used in lieu of PQ requirements. A solution used in the initial standard curve of an ICP–OES or ICP–MS instrument must be reassayed as a check standard at appropriate, pre-established intervals throughout the analysis of the sample set.

For single-element ICP–OES analyses, when analytical wavelengths are between 200 and 500 nm, or concentrations are >1 µg/mL, the reassayed standard should agree with its expected value to within ±10%, or as specified in an individual monograph. For multi-element ICP–OES analyses, when analytical wavelengths are <200 nm or >500 nm, or at concentrations of <1 µg/mL, the reassayed standard should agree with its theoretical value to within ±20%, or as specified in an individual monograph. For single-element ICP–MS analyses, when analytical masses that are free of interferences and when concentrations are >1 ng/mL, the reassayed standard should agree with its expected value to within ±10%, or as specified in an individual monograph.

For multi-element ICP–MS analyses, or when concentrations are <1 ng/mL, or for single-element analyses where interferences may be present, the reassayed standard should agree with its expected value to within ±20%, or as specified in an individual monograph.

In cases where an individual monograph provides different guidance regarding the reassayed check standard for ICP–OES or ICP–MS, the requirements of the monograph take precedence. Specific procedures, acceptance criteria, and time intervals for characterizing ICP–OES or ICP–MS performance depend on the instrument and intended application.

PROCEDURE

Users must evaluate and select the type of material of construction, pretreatment, and cleaning of analytical labware used in ICP–OES and ICP–MS analyses. The material must be inert and, depending on the specific application, resistant to caustics, acids, and/or organic solvents. For some analyses, diligence must be exercised to prevent the adsorption of analytes onto the surface of a vessel; contamination of the sample solutions from metal and ions present in the container also can lead to inaccurate results. For the analysis of a ubiquitous element, it is often necessary to use the purist grade of reagent or solvent available. Check all solutions for elemental contamination before they are used in an analysis.

Standard Solution

Standard solutions are used to standardize the instrument at the time-of-use, and prepare these solutions as directed in the individual monograph. [NOTE—Commercially available single- or multi-element standard solutions, traceable to the National Institute of Standards and Technology or to an equivalent national metrology organization, can be used in the preparation of standard solutions.] Standard solutions, especially those used for ultra-trace analyses, may have limited shelf-life. Stability of standard solutions can vary depending on concentration, analyte of interest, storage container type, and storage conditions. For these reasons, standard solutions with concentrations <10 ppm (w/v) should be retained for NMT 24 h, unless stability is demonstrated experimentally.

The method of standard additions can be used for instrument standardization. This method involves adding a known concentration of the analyte element to the sample at NLT two concentration levels against an unspiked sample preparation. The instrument response is plotted against the concentration of the added analyte element, and a linear regression line is drawn through the data points. The absolute value of the *x*-intercept multiplied by any dilution factor is the concentration of the analyte in the sample, and many instruments will perform the analyte calculation automatically. Once a method has been developed and is in routine use, it is common practice to calibrate with a blank and a single standard. One-point standardizations are suitable for conducting limit tests on production materials and final products, provided that the methodology has been rigorously validated for sufficient specificity, sensitivity, linearity, accuracy, precision, ruggedness, and robustness.

Sample Solution

Although solid samples and slurried samples may be analyzed, it is generally necessary to prepare solutions of samples for analyses as directed in the individual monograph. Samples may be dissolved in any solvent, including organic solvents or acids/bases, that are compatible with the instrument system. Samples that are not soluble in a solvent require digestion. A variety of digestion techniques could be used to dissolve a sample. These include hot-plate and microwave-assisted digestions, including open-vessel and closed-vessel approaches. Note that open-vessel digestion generally is not recommended for the analysis of volatile metals, e.g., selenium and mercury.

Analysis

The instrument must be standardized for quantitation at the time of use, following the procedure as directed in the individual monograph for the instrumental parameters. The response of standard solutions that bracket the target concentration of an analyte in a sample is determined against an appropriate blank. The detector response is plotted as a function of the analyte concentration. When an analysis is performed at or near the detection limit, the analyst cannot always use a bracketing standard. In such a case, a standard prepared at or near (within ±10% of) the detection limit should be run in triplicate, with an acceptance criteria of ±10% of the theoretical value for the standard for single-element standards, and ±20% of the theoretical value for the standard for multi-element standards.

To demonstrate the stability of the system's initial standardization, the analyst must reassay a solution used in the initial standard curve as a check standard at appropriate, pre-established intervals throughout the analysis of the sample set. Unless otherwise indicated in the individual monograph, the reassayed standard should meet the same acceptance criteria as those outlined in the PQ section above. Sample concentrations are calculated versus the working curve generated by plotting the detector response versus the concentration of the analyte in the standard solutions, and most instruments perform this calculation automatically.

VALIDATION AND VERIFICATION

Validation

Validation is required when the ICP–OES or ICP–MS method is intended for use as an alternative to the official procedure for testing an official article. The objective of the ICP–OES or the ICP–MS procedure validation is to demonstrate that the measurement is suitable for its intended purpose, including quantitative determination of the main component in a drug substance or a drug product (Category I assays), quantitative determination of impurities or limit tests (Category II), and identification tests

(Category IV). [NOTE—For definition of different categories, see *Validation of Compendial Procedures* ⟨1225⟩.] Depending on the category of the test, analytical procedure validation for the ICP–OES or ICP–MS requires the testing of linearity, range, accuracy, specificity, precision, detection limit, quantitation limit, and robustness. These analytical performance characteristics apply to externally standardized methods and to the method of standard additions.

General chapter ⟨1225⟩ provides definitions and general guidance on the procedures for analytical validation without indicating specific validation criteria for each characteristic. The intention of the following sections is to provide the user with specific validation criteria that represent the minimum expectations for this technology.

ACCURACY

For Category I assays or Category II tests, accuracy can be determined by conducting recovery studies with the appropriate matrix spiked with known concentrations of elements. It is also an acceptable practice to compare assay results obtained using the ICP–OES or ICP–MS procedure under validation to those of an established analytical procedure. In standard addition methods, accuracy assessments are based on the final intercept concentration, not the recovery calculated from the individual standard additions.

Validation criteria: 95.0%–105.0% mean recovery for the assay, and 70.0%–150.0% mean recovery for the impurity analysis. These criteria apply throughout the intended range.

Precision

REPEATABILITY

The analytical procedure is assessed by measuring the concentrations of six independently prepared sample solutions at 100% of the assay test concentration.

Validation criteria: The relative standard deviation is NMT 5.0% for the drug substance assay, NMT 5.0% for the drug product assay, and NMT 20% for the impurity analysis.

INTERMEDIATE PRECISION

The effect of random events on the analytical precision of the procedure should be established. Typical variables include performing the analysis on different days, using different instrumentation, or having the method performed by two or more analysts. As a minimum, any combination of these factors totaling three experiments will provide an estimation of intermediate precision. For example, this could be one analyst on each of 3 days, or one analyst on two sets of equipment on two different days for one instrument; three analysts could be on the same piece of equipment.

Validation criteria: The relative standard deviation is NMT 8.0% for the drug substance assay, NMT 8.0% for the drug product assay, and NMT 25.0% for the impurity analysis.

SPECIFICITY

The procedure must be able to unequivocally assess each analyte element in the presence of components that are expected to be present, including any matrix components.

Validation criteria: Demonstrated by meeting the accuracy requirement

QUANTITATION LIMIT

The limit of quantitation (QL) is estimated by calculating the standard deviation of NLT 10 replicate measurements of a blank solution and multiplying by 10. When validating a procedure using the method of standard additions, the slope of standards applied to a solution of the test material is used. Other suitable approaches can be used (see ⟨1225⟩).

A measurement of a test solution prepared from a representative sample matrix spiked at the estimated QL concentration must be performed to confirm accuracy. When validating a procedure using the method of standard additions, the validation criterion applies to the final experimental result, not the spike recovery of the individual standard addition levels.

Validation criteria: The analytical procedure should be capable of determining the analyte precisely and accurately at a level equivalent to 50% of the specification.

LINEARITY

A response curve between the analyte concentration and absorbance is prepared from NLT two standard solutions and a blank (for a total of three data points), at concentrations that encompass the anticipated concentration of the test solution. The standard curve is then evaluated using appropriate statistical methods, such as a least-squares regression.

For experiments that do not yield a linear relationship between analyte concentration and the ICP–OES or ICP–MS response, appropriate statistical methods must be applied to describe the analytical response.
Validation criteria: Correlation coefficient (*R*), NLT 0.995 for Category I assays and NLT 0.99 for Category II quantitative tests

RANGE

Range is the interval between the upper and lower concentrations (amounts) of analyte in the sample (including these concentrations) for which it has been demonstrated that the analytical procedure has a suitable level of precision, accuracy, and linearity that is demonstrated by meeting the precision, accuracy, and linearity requirements.
Validation criteria: For Category I tests, the validation range for 100.0% centered acceptance criteria is 80.0%–120.0%. For noncentered acceptance criteria, the validation range is 10.0% below the lower limit to 10.0% above the upper limit. For content uniformity, the validation range is 70.0%–130.0%. For Category II tests, the validation range covers 70.0%–130.0% of the acceptance criteria.

ROBUSTNESS

The reliability of an analytical measurement is demonstrated by deliberate changes to experimental parameters. Because certain changes to experimental parameters could result in potential safety issues or damage to equipment, robustness is demonstrated by meeting the intermediate precision requirements set forth above.

Verification

U.S. Current Good Manufacturing Practices regulations [21 CFR 211.194(a)(2)] indicate that users of the analytical procedures, as described in *USP–NF*, are not required to validate these procedures if they are provided in a monograph. Instead, users must simply verify their suitability under actual conditions of use.

The objective of ICP–OES or ICP–MS procedure verification is to demonstrate that the procedure, as prescribed in a specific monograph, should be executed by the user with suitable accuracy, specificity, and precision using the instruments, analysts, and sample matrices available. According to *Verification of Compendial Procedures* ⟨1226⟩, if the verification of the compendial procedure by following the monograph is not successful, the procedure may not be suitable for use with the article under test. It may be necessary to develop and validate an alternative procedure as allowed in *General Notices and Requirements 6.30*.

Verification of compendial ICP–OES or ICP–MS methods should, at a minimum, include the execution of the validation parameters for specificity, accuracy, precision, linearity, and limit of quantitation, when appropriate, as indicated in *Validation*.

⟨731⟩ LOSS ON DRYING

The procedure set forth in this chapter determines the amount of volatile matter of any kind that is driven off under the conditions specified. For substances appearing to contain water as the only volatile constituent, the procedure given in the chapter, *Water Determination* ⟨921⟩, is appropriate, and is specified in the individual monograph.

Unless otherwise directed in the individual monograph, conduct the determination on a 1- to 2-g test specimen. Mix the substance to be tested and, if it is in the form of large particles, reduce the particle size to about 2 mm by quickly crushing before weighing out the test specimen. Tare an appropriate glass-stoppered, shallow weighing bottle that has been dried for about 30 minutes under the same conditions to be employed in the determination and cooled to room temperature in a desiccator. Put the test specimen in the bottle, replace the cover, and accurately weigh the bottle and the contents. By gentle, sidewise shaking, distribute the test specimen as evenly as practicable to a depth of about 5 mm generally, and not more than 10 mm in the case of bulky materials. Place the loaded bottle in the drying chamber, removing the stopper and leaving it also in the chamber. Dry the test specimen at the temperature and for the time specified in the monograph. [NOTE—The temperature specified in the monograph is to be regarded as being within the range of ±2° of the stated figure.] When "dry to constant weight" is specified in a monograph, drying shall be continued until two consecutive weighings do not differ by more than 0.50 mg per g of substance taken, the second weighing following an additional hour of drying. Upon opening the chamber, close the bottle promptly, and allow it to come to room temperature in a desiccator before weighing.

If the substance melts at a lower temperature than that specified for the determination of *Loss on Drying*, maintain the bottle with its contents for 1 to 2 hours at a temperature 5° to 10° below the melting temperature, then dry at the specified temperature.

Where capsules are to be tested, use a portion of the mixed contents of not fewer than 4 capsules.

Where tablets are to be tested, use powder from not fewer than 4 tablets.

Where the individual monograph directs that loss on drying be determined by thermogravimetric analysis, a sensitive electrobalance is to be used.

Where drying in vacuum over a desiccant is directed in the individual monograph, a vacuum desiccator or a vacuum drying pistol, or other suitable vacuum drying apparatus, is to be used.

Where drying in a desiccator is specified, exercise particular care to ensure that the desiccant is kept fully effective by frequent replacement.

Where drying in a capillary-stoppered bottle[1] in vacuum is directed in the individual monograph, use a bottle or tube fitted with a stopper having a 225 ± 25-µm diameter capillary, and maintain the heating chamber at a pressure of 5 mm or less of mercury. At the end of the heating period, admit dry air to the heating chamber, remove the bottle, and with the capillary stopper still in place allow it to cool to room temperature in a desiccator before weighing.

⟨733⟩ LOSS ON IGNITION

This procedure is provided for the purpose of determining the percentage of test material that is volatilized and driven off under the conditions specified. The procedure, as generally applied, is nondestructive to the substance under test; however, the substance may be converted to another form such as an anhydride.

Perform the test on finely powdered material, and break up lumps, if necessary, with the aid of a mortar and pestle before weighing the specimen. Weigh the specimen to be tested without further treatment, unless a preliminary drying at a lower temperature, or other special pretreatment, is specified in the individual monograph. Unless other equipment is designated in the individual monograph, conduct the ignition in a suitable muffle furnace or oven that is capable of maintaining a temperature within 25° of that required for the test, and use a suitable crucible, complete with cover, previously ignited for 1 hour at the temperature specified for the test, cooled in a desiccator, and accurately weighed.

Unless otherwise directed in the individual monograph, transfer to the tared crucible an accurately weighed quantity, in g, of the substance to be tested, about equal to that calculated by the formula:

$$10/L$$

in which L is the limit (or the mean value of the limits) for *Loss on ignition*, in percentage. Ignite the loaded uncovered crucible, and cover at the temperature (±25°) and for the period of time designated in the individual monograph. Ignite for successive 1-hour periods where ignition to constant weight is indicated. Upon completion of each ignition, cover the crucible, and allow it to cool in a desiccator to room temperature before weighing.

⟨735⟩ X-RAY FLUORESCENCE SPECTROMETRY

INTRODUCTION

X-ray fluorescence (XRF) spectrometry is an instrumental method based on the measurement of characteristic X-ray photons caused by the excitation of atomic inner-shell electrons by a primary X-ray source. The XRF method can be used for both qualitative and quantitative analysis of liquids, powders, and solid materials. The X-rays produced by an X-ray tube include characteristic lines that correspond to the anode material and a continuum known as Bremsstrahlung radiation. Both types of X-rays can be used to excite atoms and thus induce X-rays. XRF instrumentation can be divided into one of two categories: Wavelength Dispersive X-ray Fluorescence (WDXRF) and Energy Dispersive X-ray Fluorescence (EDXRF). The main factor distinguishing these technologies is the method used to separate the spectrum emitted by the atoms in the sample. The energy of the X-ray photon is characteristic for a given electron transition in an atom and is *qualitative* in nature. The *intensity* of the emitted radiation is indicative of the number of atoms in the sample and constitutes the *quantitative* nature of the method.

QUALIFICATION OF XRF SPECTROMETERS

Installation Qualification

See also *USP* general information chapter *Analytical Instrument Qualification* ⟨1058⟩.

[1] Available as an "antibiotic moisture content flask" from Kimble-Kontes, 1022 Spruce St., Vineland, NJ 08362-1502.

Operational Qualification

The purpose of operational qualification (OQ) is to verify that the system operates within target tolerances using appropriate samples with known spectral properties. OQ is a check of the key operating parameters and should be performed following installation, repairs, or major maintenance that can affect the performance of the instruments. Note that all calibration samples must be handled with cotton or nitrile gloves and must be stored in sealed plastic containers. Alternatively, they may be fixed in the instrument.

The OQ tests and specifications in the following sections are typical examples only (see *Tables 1* and *3*). Other tests and standards can be used to establish tolerances for these purposes. The instrument vendor often makes samples and test parameters available as part of the IQ package.

Table 1. EDXRF OQ Specifications

Test	Procedure	Acceptance Criteria
Peak position	Acquire a spectrum of the Al–Cu energy calibration sample.	The spectrum should have at least 3000 counts at the top of both the Al Kα and the Cu Kα peaks. The energy corresponding to the peaks of Al Kα and Cu Kα should differ less than 0.1% from the tabulated values.
Detector resolution	Calculate the resolution (full width, half maximum) at the same energy and at the same count rate that was used at IQ.	The resolution value should not change more than 10% from the value determined at IQ.
Count rate	Measure the count rate of Al and Cu Kα lines from the energy calibration sample.	<10% change from initial measurements at IQ, for each peak

The Al–Cu energy calibration sample is a disc of Al–Cu alloy (EN AW-AlCu6BiPb; Alloy 2011, ASTM B211) that has been selected for use in EDXRF spectrometers. This alloy is generally available, is resistant to corrosion, and provides adequate intensities for both Al Kα and Cu Kα. These characteristic lines cover the typical energies used for XRF analysis. Also, sufficient information can be obtained from spectra recorded on this material to assess detector resolution. A more complete compositional specification for this calibration sample is given in *Table 2*.

Table 2. Specification of the Concentration of the Alloying Elements in Al–Cu Alloy (the Remaining Balance Is Aluminum)

Element	Concentration Limits (in % by Weight)
Cu	5–6
Zn	0.3 maximum
Fe	0.7 maximum
Bi	0.2–0.6
Pb	0.2–0.6
Si	0.4 maximum

When the energy range of the analytical lines for which the spectrometer will be used includes energies above 50 keV, a pure W metal (99.5% minimum) should be used instead of the Al–Cu alloy. This metal is stable, is generally available, and provides well-defined characteristic lines at 8.40 keV (L-lines) and 59.3 keV (K-lines).

Table 3. WDXRF OQ Specifications

Test	Procedure	Acceptance Criteria
Peak angle	Perform according to the manufacturer's procedure. Repeat for each crystal.	The angle corresponding to the peak maximum should differ less than 0.10 degree 2θ of the angle measured at IQ.
Detector resolution	Full width half maximum at specified wavelengths and at the same measurement conditions at the time of IQ. Repeat for each detector available.	NMT 20% change
Count rate	Measure count rate from the specified monitor specimen at a specified wavelength at the same measurement conditions at the time of IQ. Repeat for each detector available.	<10% change from initial measurements at IQ

Use Inconel 625 (Special Metals Corporation, New Hartford, NY) as a sample for WDXRF spectrometers. Other designations for this alloy are UNS N06625, DIN 2.4856, ASTM B443, ASME SB-443, and AMS 5599. This is a nickel-based alloy that includes chromium, molybdenum, and niobium as the most important alloying elements. A more complete compositional specification is given in *Table 4*.

Table 4. Elemental Concentrations in Inconel 625

Element	Concentration Limits (in % by Weight)
Ni	58.0 minimum
Cr	20.0–23.0
Fe	5.0 maximum
Mo	8.0–10.0
Nb[a]	3.15–4.15

[a] This could include Ta.

A polished piece of Inconel 625 should never require resurfacing when stored and used appropriately.

The radiation characteristics of nickel can be detected by all detectors that are used in sequential WDXRF, whether they are flow proportional, sealed gas, or scintillation detectors. In combination with Mo K (and L) radiation, the tests regarding peak position and detector response of WDXRF spectrometers can be completed readily. *Table 5* includes the typical wavelengths or energies that are used for XRF analysis.

Table 5. Energies and Wavelengths[a] for Al, Ni, Cu, Mo, and W

	Al	Ni	Cu	Mo	W
$K\alpha_1$ Line transition	$K–L_{2,3}$	$K–L_{2,3}$	$K–L_{2,3}$	$K–L_3$	$K–L_3$
$K\alpha_1$ Energy (eV)	1487	7473	8041	17479	59310
$K\alpha_1$ Wavelength (Å)	8.340	1.659	1.542	0.709	0.209
$L\alpha_1$ Line transition	N/A[b]	N/A	N/A	$L_3–M_5$	$L_3–M_5$
$L\alpha_1$ Energy (eV)	N/A	N/A	N/A	2293.2	8398.2
$L\alpha_1$ Wavelength (Å)	N/A	N/A	N/A	5.4066	1.47632

[a] From: Deslattes RD, Kessler EG, Indelicato P, et al. X-ray transition energies: new approach to a comprehensive evaluation. *Rev Mod Phys.* 2003;75(1):35–99. For Al, Ni, and Cu, the $K\alpha_1$ and $K\alpha_2$ energies from *Table V* were averaged with 2:1 weighting. Wavelength conversion uses the *hc/E* value from page 94. Values for Mo and W are taken from *Table VI*.

[b] N/A = not applicable.

Performance Qualification

The purpose of performance qualification (PQ) is to determine that the instrument is capable of meeting the user's requirements for all critical-to-quality measurements.

Depending on typical use, the specifications for PQ may be different from the manufacturer's specifications. Method-specific PQ tests, also known as system suitability tests, may be used in lieu of PQ requirements for validated methods.

Specific procedures, acceptance criteria, and time intervals for characterizing XRF performance depend on the instrument and its intended application. Demonstrating stable instrument performance over extended periods of time provides some assurance that reliable measurements can be obtained from sample spectra using previously validated XRF experiments.

PROCEDURE

General Recommendations

Analysts should check the suitability of all reagents and materials for contamination before using depending on the method used. The analysis of a ubiquitous element often requires the use of the purest grade of reagent or material available. Sample holders and support windows should be appropriate for the analysis and the instrument configuration. Analysts should evaluate the cleaning of equipment used to prepare samples for XRF analysis in order to avoid cross-contamination of samples.

SAMPLES

Liquids: Liquid samples can be introduced directly to the XRF spectrometer provided that the solution consists of a single phase and has sufficiently low volatility. Analysis of liquid samples requires use of a special liquid sample holder and a commercially available support window composed of a suitable polymer film. Alternatively, liquid samples can be transferred onto the surface of a disk and dried before analysis. The experiment typically is conducted using a purge gas. The liquid sample can be spiked directly with solution standards at appropriate concentrations to facilitate accuracy, precision, and specificity tests as required for method validation.

Powders: Prepared powders may be measured directly in a liquid sample holder. Alternatively, they may be pressed into pellets. If the powder has poor self-binding properties, it may require a binder such as a wax or ethyl cellulose.

Powders also can be prepared for XRF analysis by fusing the sample material into a glass using a flux, typically sodium tetraborate, lithium tetraborate, and lithium metaborate. Because the temperatures required to melt the flux and dissolve the sam-

ple are relatively high (800°–1300°), this procedure is not suitable for the analysis of volatile elements such as mercury and arsenic.

Powder samples can be mixed with appropriate quantities of a certified reference material to facilitate accuracy, precision, and specificity tests as required for method validation. Alternatively, powder samples can be spiked with appropriate quantities of solution-based standards and then dried, ground if necessary, and thoroughly mixed before analysis. Standard additions can be used in instances when physical or chemical properties of the powder may introduce an analyte response bias.

Standards

Appropriate reference materials that are traceable to the National Institute of Standards and Technology, or equivalent, can be used in the preparation of XRF standards.

Analysis

For the instrumental parameters (if applicable) follow the procedure in the individual monograph. Because of differences in manufacturers' equipment configurations, analysts can use the manufacturer's suggested default conditions. At the time of use, the instrument must be standardized for the intended use. Analysts should use calibration standards to bracket the expected range of typical analyte concentrations. When they perform an analysis at or near the detection limit, analysts cannot always use a bracketing standard, which is an acceptable strategy for limit tests. Analysts should use regression analysis of the standard plot to evaluate the linearity of detector response, and individual monographs may set criteria for the residual error of the regression line.

To demonstrate the stability of the system's initial standardization, at appropriate intervals throughout their tests on the sample set analysts must re-assay the calibration standard used in the initial standard curve as a check standard. The use of an independently prepared standard also is acceptable. Unless otherwise indicated in the individual monograph, the re-assayed standard should agree with its expected value to within ±2% for *Assay* or ±20% for an impurity analysis.

Sample concentrations are calculated versus the working curve generated by plotting the instrument response versus the concentration of the analyte in the standard solutions.

VALIDATION AND VERIFICATION

Current Good Manufacturing Practice regulations [21 CFR 211.194(a)(2)] indicate that users of analytical methods described in *USP–NF* are not required to validate the accuracy and reliability of these methods but rather must verify their suitability under actual conditions of use. In this context, and according to these regulations, validation is required when an XRF procedure is used to test a nonofficial article and when this procedure is used as an alternative to the official procedure for testing an official article (see *USP–NF General Notices 6.30*). On the other hand, verification must be performed the first time an official article is tested using a *USP* procedure (for informational purposes only, refer to *Verification of Compendial Procedures* ⟨1226⟩).

Validation

The objective of an XRF method validation is to demonstrate that the measurement procedure is suitable for its intended purpose, including quantitative determination of the main component in a drug substance or a drug product (Category I assays), quantitative determination of impurities or limit tests (Category II), and identification tests (Category IV). Depending on the category of the test (see *Table 2* in *Validation of Compendial Procedures* ⟨1225⟩), the analytical method validation process for XRF requires the testing of linearity, range, accuracy, specificity, precision, quantitation limit, and robustness.

Performance characteristics that demonstrate the suitability of an XRF method are similar to those required for any analytical procedure. A discussion of the applicable general principles is found in ⟨1225⟩. Specific acceptance criteria for each validation parameter must be consistent with the intended use of the method. The samples for validation should be independent of the calibration set.

ACCURACY

For Category I assays or Category II tests, analysts can determine accuracy by conducting recovery studies using the appropriate matrix spiked with known concentrations of elements. An appropriate certified standard material provided by USP also can be used. It also is an acceptable practice to compare assay results obtained using the XRF method under validation to those from an established analytical method. When analysts use the method of standard additions, accuracy assessments are based on the final intercept concentration, not the recovery calculated from the individual standard additions.

Acceptance Criteria: 98.0%–102.0% recovery for drug substances and drug product assay, 70.0%–150.0% recovery for impurity analysis. These acceptance criteria should be met throughout the validated range.

PRECISION

Repeatability: Analysts should assess the analytical method by measuring the concentrations of six separate standards at 100% of the assay test concentration. Alternatively, they can measure the concentrations of three replicates of three separate samples at different concentrations. The three concentrations should be close enough so that the repeatability is constant across the concentration range. In this case, the repeatability at the three concentrations is pooled for comparison to the acceptance criteria.

Acceptance Criteria: The relative standard deviation is NMT 1.0% for drug substance assay, NMT 2.0% for drug product assay, and NMT 20.0% for impurity analysis.

Intermediate Precision: Analysts should establish the effect of random events on the method's analytical precision. Typical variables include performing the analysis on different days, using different instrumentation, or having two or more analysts perform the method. As a minimum, any combination of at least two of these factors totaling six experiments will provide an estimation of intermediate precision.

Acceptance Criteria: The relative standard deviation is NMT 1.0% for drug substance assay, NMT 3.0% for drug product assay, and NMT 25.0% for impurity analysis.

SPECIFICITY

The procedure must unequivocally assess each analyte element in the presence of components that may be expected to be present, including any matrix components.

Acceptance Criteria: Demonstrated by meeting the *Accuracy* requirement.

QUANTITATION LIMIT

The limit of quantitation (LOQ) can be estimated by calculating the standard deviation of NLT 6 replicate measurements of a blank and multiplying by 10. Other suitable approaches may be used (see ⟨1225⟩). A measurement of a test sample prepared from a representative sample matrix and spiked so that the concentration is similar to the estimated LOQ concentration must be performed to confirm accuracy.

Acceptance Criteria: The analytical procedure should be capable of determining the analyte precisely and accurately at a level equivalent to 50% of the specification.

LINEARITY

Analysts should demonstrate a linear relationship between the analyte concentration and corrected XRF response by preparing no fewer than five standards at concentrations that encompass the anticipated concentration of the test sample. The standard curve then should be evaluated using appropriate statistical methods such as a least squares regression. The correlation coefficient (R), y-intercept, and slope of the regression line must be determined.

For experiments that do not have a linear relationship between analyte concentration and XRF response, appropriate statistical methods must be applied to describe the analytical response.

Acceptance Criteria: R is NLT 0.995 for Category I assays and NLT 0.99 for Category II quantitative tests.

RANGE

The range is the interval between the upper and lower concentration (amounts) of analyte in the sample (including the upper and lower concentrations) for which it has been demonstrated that the analytical procedure has a suitable level of precision, accuracy, and linearity. Range is demonstrated by meeting the linearity and accuracy requirement.

Acceptance Criteria: For 100.0% centered acceptance criteria: 80.0%–120.0%. For non-centered acceptance criteria: 10% below the lower limit of the specification to 10% above the upper limit of the specification. For content uniformity: 70.0–130.0%. For Category II the range requirements are 50.0%–120.0% of the acceptance criteria.

ROBUSTNESS

The reliability of an analytical measurement should be demonstrated by deliberate changes to experimental parameters. For XRF this can include measuring the stability of the analyte under specified storage conditions.

Acceptance Criteria: The measurement of a standard or sample response following a change in experimental parameters should differ from the same standard measured using established parameters by NMT ±2.0% for a drug product assay and NMT ±20.0% for an impurity analysis.

Verification

The objective of an XRF method verification is to demonstrate that the procedure as prescribed in a specific monograph is being executed with suitable accuracy, sensitivity, and precision. According to ⟨1226⟩, if the verification of the compendial procedure according to the monograph is not successful, the procedure may not be suitable for use with the article under test. It may be necessary to develop and validate an alternative procedure as allowed in *USP–NF General Notices 6.30*.

Although complete revalidation of a compendial XRF method is not required, verification of compendial XRF methods should at minimum include the execution of the validation parameters for specificity, accuracy, precision, and limit of quantitation, when appropriate, as indicated under *Validation* (above).

⟨736⟩ MASS SPECTROMETRY

INTRODUCTION

Mass spectrometry (MS) is an analytical technique based on the measurement of the mass-to-charge ratio of ionic species related to the analyte under investigation. MS can be used to determine the molecular mass and elemental composition of an analyte as well as provide an in-depth structural elucidation of the analyte.

In addition to being recognized as a powerful structure-elucidation tool, MS is also extensively used for quantitative measurements. For additional information, see general information chapter *Applications of Mass Spectrometry* ⟨1736⟩, which provides a detailed discussion of MS.

Currently available MS instrumentation offers a wide range of capabilities for qualitative and quantitative analysis, which results in a wide range of potential MS experimental approaches for a given measurement need. Because of the diversity of approaches, this chapter does not present specific procedures but instead provides experimental and system suitability information for MS procedures.

QUALITATIVE ANALYSIS

MS is a sensitive and highly specific technique for the identification of analytes. Identification or verification of structure (i.e., comparison against an authentic standard) by MS is particularly powerful when used in conjunction with a separation technique such as gas chromatography (GC) or high-performance liquid chromatography (HPLC). Additional degrees of specificity can be obtained by the use of tandem mass spectrometry (MS/MS) or high-resolution mass spectrometry (HRMS). Also, tighter tolerances on mass accuracy are also afforded using high-resolution mass spectrometry (HRMS).

Experimental Parameters

The following MS experimental parameters should be defined for a qualitative (e.g., identification) procedure.

MASS RESOLUTION

Unit mass resolution is sufficient for most identification tests. When higher resolution is required, the resolution is specified in the procedure, and demonstration of adequate resolution is included in the system suitability tests for the procedure.

MASS ACCURACY

A mass accuracy or agreement of ±0.50 mass units for singly charged ions from a known standard should be sufficient for most applications. A mass accuracy or agreement of ±0.05% from a standard should be sufficient for the identification of large molecules (above 2000 m/z) when multiply charged ions are employed for the identification test.

When higher mass accuracy is required, the required mass accuracy is specified in the procedure. A demonstration of the mass accuracy then is included in the system suitability tests for the procedure or as part of the instrument's established performance qualification (PQ) procedure discussed later in this chapter.

MASS RANGE

The mass range to be scanned is also presented in the procedure. The mass range must encompass all ions used as part of the identification confirmation.

System Suitability

The system suitability for the MS procedure should include demonstration of adequate performance for the following experimental attributes.

MASS RESOLUTION

A demonstration of the appropriate resolution is included in the system suitability tests for a procedure. The performance test in the instrument's established PQ, executed daily or prior to the time of use, may suffice. When resolutions greater than unit mass are required for a procedure, the system suitability test includes demonstration of adequate resolution along with acceptance criteria.

MASS ACCURACY

A demonstration of the mass accuracy is included in the system suitability tests for the procedure or is part of the instrument's established PQ procedure. A mass accuracy or agreement of ±0.50 mass units for singly charged ions from a known standard should be sufficient for most applications. If higher mass accuracy is required for a given procedure, the appropriate acceptance criteria are specified.

Interpretation Directions

An identification or verification experiment involves comparison of the compound of interest to an authentic standard (e.g., a USP Reference Standard). For this form of identification or verification, the standard and the sample are run under identical conditions and should have results that are within acceptable experimental error for the procedure. Applications of MS for identification purposes in a compendial monograph may incorporate the mass spectral data alone or may combine this spectral identification with the chromatographic retention time if more specificity is dictated by the particular monograph identification needs.

The procedure should also provide specific instructions that define a successful mass spectral match. If the procedure represents the only spectroscopic identification test or if no other identification tests (e.g., peptide mapping or amino acid analysis) provide structural information, the spectrum of the standard should closely resemble that of the sample and a minimum of three structurally relevant ions, preferably one of which is an ion representing the molecular mass of the analyte, should be used for the comparison. In the case where only the ion representing the intact molecule is produced, the accurate mass or MS/MS spectrum of the molecular ion may be used to strengthen the identification. If other structurally relevant identification tests are also conducted, the comparison can be conducted with fewer ions as long as one of the ions represents the molecular mass of the analyte. For example, the MS identification test for a protein may examine only an ion that represents the molecular mass if several other tests are conducted to confirm the protein structure.

QUANTITATIVE ANALYSIS

The sensitivity and specificity of MS also make it a suitable analytical tool for the quantification of analytes. Quantification is particularly powerful when used in conjunction with a separation technique such as GC or HPLC. Further degrees of specificity can be obtained by the use of MS/MS or HRMS.

Experimental Parameters

The following experimental parameters should be defined within a quantitative (e.g., identification) MS procedure.

MASS RESOLUTION

Unit mass resolution is sufficient for most quantitative tests. When higher resolution is required, the resolution is specified in the procedure, and demonstration of the mass accuracy is included in the system suitability tests for the procedure.

MASS ACCURACY

The mass accuracies listed in the previous qualitative section should be sufficient for most quantitative applications. When higher mass accuracy is required, it is specified in the procedure. A demonstration of the mass accuracy is included in the system suitability tests for the procedure or as part of the instrument's established PQ procedure.

MASS SELECTION

The masses to be monitored (e.g., mass range, individual masses, or MS/MS transitions) are presented in the procedure.

System Suitability

The system suitability for the MS procedure should include demonstration of adequate performance for the following experimental attributes, as appropriate for the procedure.

MASS RESOLUTION

A demonstration of the appropriate resolution is included in the system suitability tests for the procedure or is part of the instrument's established PQ procedure. When resolutions greater than unit mass are required for a procedure, the system suitability test includes demonstration of adequate resolution along with acceptance criteria.

MASS ACCURACY

A demonstration of the mass accuracy is included in the system suitability tests for the procedure or is part of the instrument's established PQ procedure. A mass accuracy or agreement of ±0.50 mass units for singly charged ions from a known standard should be sufficient for most applications. If higher mass accuracy is required for a given procedure, the appropriate acceptance criteria are specified.

PRECISION

The system suitability includes a demonstration of adequate precision. See *Table 1* for maximum limits for precision. Typically, system suitability limits are set to tighter limits than those employed to ensure adequate precision for the validation experiments. (See also the section on *Validation and Verification of Mass Spectrometry Analytical Procedures.*)

LINEARITY

The system suitability includes a demonstration of adequate linearity. See *Table 1* for appropriate linearity limits. (See also the section on *Validation and Verification of Mass Spectrometry Analytical Procedures.*)

ACCURACY

In certain situations, quality control (or check) samples may also be appropriate for inclusion in the procedure to ensure the quality of the measurement. Typically, these quality control samples are of known analyte concentration and are prepared identically to the test samples. If used, quality control (or check) samples are also prepared as a verification of time-of-application method accuracy. The procedure specifies the number or analysis order of quality control (or check) samples needed. Acceptance criteria for calibration and quality control (or check) sample results should be aligned with the validation requirements as required by the application type (i.e., Category I or II) as outlined in *Table 1*.

QUANTITATION LIMIT

In certain applications (e.g., limits tests), it may be necessary to include demonstration of the ability to detect the analyte at a prescribed level. For these applications, the procedure specifies the limit and success criteria (e.g., signal-to-noise ratio).

QUALIFICATION OF MASS SPECTROMETRY INSTRUMENTS

Qualification of an MS instrument can be divided into three elements: installation qualification (IQ), operational qualification (OQ), and PQ. For additional information, see *Analytical Instrument Qualification* 〈1058〉, which may be a helpful, but not mandatory resource.

Installation Qualification

IQ provides evidence that the hardware and software are installed to accommodate safe and effective use of the instrument at the desired location.

Operational Qualification

In OQ, an instrument's performance is characterized using standards to verify that the system operates within target specifications. The purpose of OQ is to demonstrate that instrument performance is suitable for a given application. Because so many different approaches are available for measuring MS spectra, OQ using standards with known spectral properties is recommended. Because of the diversity of MS instrumentation, interfaces, and experimental approaches, MS instruments should be qualified against target specifications for the intended application, not simply the specifications supplied by the manufacturer.

Performance Qualification

PQ helps to determine that the instrument is capable of meeting the user's requirements for all critical-to-quality measures. PQ documentation should describe the following:

- the definition of the specific performance criteria and detailed test procedures, including test samples and instrument parameters;
- the elements that will be measured to evaluate the criteria and the predefined specifications;
- the test interval, which may be daily or time-of-use measurements;
- the use of bracketing samples or groups of samples; and
- corrective actions that will be implemented if the spectrometer does not pass the specifications.

Periodic PQ should include a subset of the OQ tests to ensure that the instrument as supplied is performing at a level that produces data that are suitable for their intended use. Depending on typical use, the specifications for PQ may be higher or lower than the manufacturer's installation specifications. Method-specific PQ tests, also known as system suitability tests, may be used in lieu of PQ requirements for validated procedures.

Because of the diversity of MS instrumental configurations and experimental designs, a standard sample or experiment for all PQ assessments may not be available. Thus, method-specific PQ tests or system suitability tests often are needed. The PQ experimental design should be sufficiently robust to ensure proper instrument performance for the intended application, including the specifications associated with the measurement. At minimum, PQ experiments should include the following.

- For qualitative applications, the PQ experiment includes a check of the mass accuracy of the instrumentation. A mass accuracy or agreement of ±0.50 mass units for singly charged ions from a known standard should be sufficient for most applications.
- For quantitative applications, the PQ experiment includes checks of mass accuracy and precision. A mass accuracy or agreement of ±0.50 mass units for singly charged ions from a known standard should be sufficient for most applications. The success criteria for precision is established via consideration of the instrument and method capability, and provides sufficient controls relative to the specification for the measurement in question.

Characterizing Instrument Performance

Specific procedures, acceptance criteria, and time intervals for characterizing MS spectrometer performance depend on the instrument and its intended applications. Many MS applications use previously validated experiments that relate MS spectra to a chemical property of interest. Analysts typically demonstrate stable instrument performance over extended periods of time. This practice provides some assurance that reliable measurements can be taken from sample spectra using previously validated MS experiments.

VALIDATION AND VERIFICATION OF MASS SPECTROMETRY ANALYTICAL PROCEDURES

Validation is required only when an MS procedure is an alternative to the official procedure for testing an official article.

The objective of validating an MS procedure is to demonstrate that the measurement is suitable for its intended purpose, including quantitative determination of the main component in a drug substance or a drug product (Category I assays), quantitative determination of impurities (Category II), and identification tests (Category IV). [NOTE—For additional information on the different category definitions, see *Validation of Compendial Procedures* ⟨1225⟩.] Depending on the category of the test, analytical procedure validation requires the testing of linearity, range, accuracy, specificity, precision, quantitation limit, and robustness. These analytical performance characteristics apply to externally standardized methods and to the method of standard additions.

Chapter ⟨1225⟩ provides definitions and general guidance about analytical procedures validation without indicating specific validation criteria for each characteristic. The intention of the following sections is to provide the user with specific validation criteria that represent the minimum expectations for this technology. For each particular application, tighter criteria may be needed in order to demonstrate suitability for the intended use.

Measurement Categories for Mass Spectrometry Analytical Procedures

The required validation performance characteristics of an MS analytical procedure, assuming the typical Category I USP specifications of 98.0%–102.0% for drug substances and 95.0%–105.0% for drug products, are listed in *Table 1*. The actual validation performance characteristics would be dependent upon the specifications in place and should provide sufficient evidence that the measurement capability is sufficient for those specifications. A procedure validation protocol must specify the required validation experiments and validation criteria. These criteria are determined according to the intended purpose of the analytical procedure.

Table 1. Analytical Measurement Requirements

Analytical Performance Characteristics	Category I	Category II Quantitative
Specificity	Ensured by use of a reference standard when possible and demonstrable lack of interference from other components	
Linearity	Correlation coefficient *(R)* NLT 0.995	Correlation coefficient *(R)* NLT 0.99
Range	For 100.0% centered acceptance criteria: 80.0%–120.0%. For noncentered acceptance criteria: 10.0% below the lower limit to 10.0% above the upper limit. For content uniformity: 70.0%–130.0%	50%–120%
Accuracy	98.0%–102.0% (drug substance) 95.0%–105.0% (drug product)	80.0%–120.0%
Repeatability	NMT 1.0% (drug substance) NMT 2.0% (drug product)	NMT 20.0%
Intermediate precision	NMT 1.0% (drug substance) NMT 3.0% (drug product)	NMT 25.0%
Quantitation limit	—	The analytical procedure should be capable of determining the analyte precisely and accurately at a level equivalent to 50% of the specification.
Robustness	The reliability of an analytical measurement should be demonstrated by deliberate changes to experimental parameters.	

Analytical Procedure Validation

The objective of analytical procedure validation is to demonstrate that the analytical procedure is suitable for its intended purpose by conducting experiments and obtaining results that meet predefined acceptance criteria. MS analytical procedures can include quantitative tests for major component and impurities content, limit tests for the presence of impurities, quantification of a component in a product or formulation, or identification tests.

VALIDATION PARAMETERS

Performance characteristics that demonstrate the suitability of an analytical procedure are similar to those required for any analytical procedure. For additional information on the applicable general principles, see 〈1225〉. Specific acceptance criteria for each validation parameter must be consistent with the intended use of the analytical procedure.

The performance characteristics that are required as part of a validation for each of the analytical procedure categories are given in *Table 1*.

Specificity: The purpose of a specificity test is to demonstrate that measurements of the intended analyte signals are free of interference from components and impurities in the test material. Specificity tests can be conducted to compare spectra of components and impurities that are known from synthetic processes, formulations, and test preparations. Specificity is also to be demonstrated for any materials added as part of the procedure (e.g., specificity versus isotope-labeled internal standards).

For an identification MS analytical procedure (Category I and II), validation experiments may include multidimensional MS experiments to validate correct assignments of an ion's structure or origin.

Linearity: A linear relationship is exhibited between the analyte concentration and instrument response. This is demonstrated by measuring analyte responses from NLT five standard solutions at concentrations that encompass the anticipated concentration range of analyte(s) in the test solution. For Category I, standard solutions can be prepared from reference materials in appropriate solvents. For Category II (MS analytical procedures that are used to quantitate impurities), linearity samples are prepared by spiking suitable test samples that contain low amounts of analyte or by spiking matrix samples at concentrations of the expected range. The standard curve then is constructed using appropriate statistical analytical procedures such as a least-squares regression. The correlation coefficient (*R*), *y*-intercept, slope of the regression line, and residual root mean square are then determined. Absolute values determined for these factors are appropriate for the procedure being validated.

Range: The range between the low and high concentrations of analyte is given by the quantitative MS analytical procedure. This typically is based on test article specifications in the *USP* monograph. It is the range within which the analytical procedure can demonstrate an acceptable degree of linearity, accuracy, and precision and can be obtained from an evaluation of that analytical procedure.

Recommended ranges for various MS analytical procedures are as follows.

- For Category I—assay of a drug substance (or a finished product): 80%–120% of the test concentration;
- For Category I—content uniformity: a minimum of 70%–130% of the test concentration;
- For Category II—determination of an impurity: 50%–120% of the acceptance criteria.

Accuracy: The accuracy of a quantitative MS analytical procedure is determined across the required analytical range. Typically, three levels of concentrations are evaluated using triplicate preparations at each level.

Preparation of accuracy samples: For drug substance assays (Category I), accuracy is determined by analyzing a reference standard of known purity. For drug product assays (Category I), a composite sample of reference standard and other components in a pharmaceutical finished product should be used for analytical procedure validation. The assay results are compared to the theoretical value of the reference standard to estimate errors or percent recovery. For the quantitation of impurities (Category II), the accuracy of the analytical procedure can be determined by conducting studies with drug substances or products spiked with known concentrations of the analyte under test.

Assay results from the analytical procedure being validated may be compared to those of an established alternative analytical procedure.

Precision:

Repeatability: The analytical procedure is assessed by measuring the concentrations of three replicates of separate standard solutions at three different concentrations that encompass the analytical range. Alternatively, the concentrations of six separate standard solutions at 100% of the test concentration can be measured. The relative standard deviation from the replicate measurements is then evaluated to determine if the solutions meet the acceptance criteria.

Intermediate precision: The effect of random events on the analytical precision of the analytical procedure is to be established. Typical variables include performing the analysis on different days, using different instruments that are suitable as specified in the analytical procedure, or having the analytical procedure performed by two or more analysts.

Quantitation limit: The quantitation limit is validated by measuring six replicates of test samples spiked with analyte at 50% of specification.

From these replicates, analysts are then able to determine accuracy and precision. Examples of specifications for Category II quantitative determinations are that the measured concentration is within 70%–130% of the spike concentration and the relative standard deviation is NMT 15%.

Robustness: The reliability of an analytical measurement is demonstrated with deliberate changes to critical experimental parameters. These can include measuring the stability of the analyte under specified storage, chromatographic, or ionization conditions.

Analytical Procedure Verification

U.S. Current Good Manufacturing Practices regulations [21 CFR 211.194(a)(2)] indicate that users of analytical procedures described in *USP–NF* do not need to validate procedures that are provided in a monograph. Instead, they must simply verify the suitability of the procedures under actual conditions of use.

The objective of an MS procedure verification is to demonstrate that the procedure as prescribed in a specific monograph can be executed by the user with suitable accuracy, specificity, and precision using the instruments, analysts, and sample matrices available. According to the general information chapter *Verification of Compendial Procedures* ⟨1226⟩, if the verification of the compendial procedure by following the monograph is not successful, the procedure may not be suitable for use with the article under test. It may be necessary to develop and validate an alternative procedure as allowed in *General Notices and Requirements 6.30*.

Verification of a compendial MS procedure includes at minimum the execution of the validation parameters for specificity, accuracy, precision, and limit of quantitation, when appropriate, as indicated in the *Validation and Verification of Mass Spectrometry Analytical Procedures* section in this chapter.

⟨741⟩ MELTING RANGE OR TEMPERATURE

For Pharmacopeial purposes, the melting range, melting temperature, or melting point is defined as those points of temperature within which, or the point at which, the first detectable liquid phase is detected to the temperature at which no solid phase is apparent, except as defined otherwise for *Classes II* and *III* below. A melting transition may be instantaneous for a highly pure material, but usually a range is observed from the beginning to the end of the process. Factors influencing this transition include the sample size, the particle size, the efficiency of heat diffusion, and the heating rate, among other varia-

bles, that are controlled by procedure instructions. In order to achieve consistency and repeatability during melting point determinations, the following conditions should be applied. Use dried material that has been gently pulverized and introduced into a capillary tube to a nominal height of 3 mm, and perform the melting determination at a heating rate of 1°/min. In some articles, the melting process is accompanied by simultaneous decomposition, which is visually evidenced as a side event like darkening of the material, charring, bubbling, or other incident. The visual impact of this side reaction frequently obscures the end of the melting process, which it may be impossible to accurately determine. In those circumstances, only the beginning of the melting can be accurately established; and it is to be reported as the melting temperature. The accuracy of the apparatus to be used as described below should be checked at suitable intervals by the use of one or more of the available USP Melting Point Reference Standards, preferably those that melt nearest the melting temperatures of the compounds being tested (see *USP Reference Standards* ⟨11⟩). The USP Melting Point Reference Standards are intended to check the accuracy of the device and are not suitable to calibrate.

Eight procedures for the determination of melting range or temperature are given herein, varying in accordance with the nature of the substance. When no class is designated in the monograph, use the procedure for *Class Ia* for crystalline or amorphous substances and the procedure for *Class II* for waxy substances.

The procedure known as the mixed-melting point determination, whereby the melting range or temperature of a solid under test is compared with that of an intimate mixture of equal parts of the solid and an authentic specimen of it, e.g., the corresponding USP Reference Standard, if available, may be used as a confirmatory identification test. Agreement of the observations on the original and the mixture constitutes reliable evidence of chemical identity.

General Chapters

APPARATUS

Apparatus with cameras or other computerized equipment with advantages in terms of accuracy, sensitivity, or precision may be used provided that the apparatus is properly qualified.

Apparatus I

An example of a suitable melting range *Apparatus I* consists of a glass container for a bath of transparent fluid, a suitable stirring device, an accurate thermometer, and a controlled source of heat. The bath fluid is selected with a view to the temperature required, but light paraffin is used generally and certain liquid silicones are well adapted to the higher temperature ranges. The fluid is deep enough to permit immersion of the thermometer to its specified immersion depth so that the bulb is still about 2 cm above the bottom of the bath. The heat may be supplied by an open flame or electrically. The capillary tube is about 10 cm long and 0.8–1.2 mm in internal diameter with walls 0.2–0.3 mm in thickness.

Apparatus II

An instrument may be used in the procedures for *Classes I, Ia,* and *Ib*. An example of a suitable melting range *Apparatus II* consists of a block of metal that may be heated at a controlled rate, its temperature being monitored by a sensor. The block accommodates the capillary tube containing the test substance and permits monitoring of the melting process, typically by means of a beam of light and a detector. The detector signal may be processed by a microcomputer to determine and display the melting point or range, or the detector signal may be plotted to allow visual estimation of the melting point or range.

PROCEDURES

Procedure for Class I, Apparatus I

Reduce the substance under test to a very fine powder, and, unless otherwise directed, render it anhydrous when it contains water of hydration by drying it at the temperature specified in the monograph, or, when the substance contains no water of hydration, dry it over a suitable desiccant for NLT 16 h (or at the conditions stated in *Loss on Drying* ⟨731⟩, if appropriate).

Charge a capillary glass tube, one end of which is sealed, with a sufficient amount of the dry powder to form a column in the bottom of the tube 3 mm high when packed down as closely as possible by moderate tapping on a solid surface. Due to the instrument design, alternative sample sizes may be instructed by the instrument manufacturer.

Heat the bath until the temperature is about 10° below the expected melting point. Remove the thermometer, and quickly attach the capillary tube to the thermometer by wetting both with a drop of the liquid of the bath or otherwise, and adjust its height so that the material in the capillary is level with the thermometer bulb. Replace the thermometer, and continue the heating, with constant stirring, sufficiently to cause the temperature to rise at a rate of about 3°/min. When the temperature is about 3° below the lower limit of the expected melting range, reduce the heating so that the temperature rises at a rate of about 1°/min. Continue heating until melting is complete.

The temperature at which the column of the substance under test is observed to collapse definitely against the side of the tube at any point indicates the beginning of melting, and the temperature at which the test substance becomes liquid throughout corresponds to the end of melting or the melting point. The two temperatures fall within the limits of the melting

range. If melting occurs with decomposition, the melting temperature corresponding to the beginning of the melting is within the range specified.

Procedure for Class Ia, Apparatus I

Prepare the test substance and charge the capillary as directed in *Procedure for Class I, Apparatus I*. Heat the bath until the temperature is about 10° below the expected melting point and is rising at a rate of about 1°/min. Insert the capillary as directed in *Procedure for Class I, Apparatus I* when the temperature is about 5° below the lower limit of the expected melting range, and continue heating until melting is complete. Record the melting range as directed in *Procedure for Class I, Apparatus I*.

Procedure for Class Ib, Apparatus I

Place the test substance in a closed container and cool to 10°, or lower, for at least 2 h. Without previous powdering, charge the cooled material into the capillary tube as directed in *Procedure for Class I, Apparatus I*, then immediately place the charged tube in a vacuum desiccator and dry at a pressure not exceeding 20 mm of mercury for 3 h. Immediately upon removal from the desiccator, fire-seal the open end of the tube, and as soon as practicable proceed with the determination of the melting range as follows. Heat the bath until the temperature is about 10° below the expected melting range, then introduce the charged tube, and heat at a rate of rise of about 1°/min until melting is complete. Record the melting range as directed in *Procedure for Class I, Apparatus I*.

If the particle size of the material is too large for the capillary, precool the test substance as directed above, then with as little pressure as possible gently crush the particles to fit the capillary, and immediately charge the tube.

Procedure for Class I, Apparatus II

Prepare the substance under test and charge the capillary tube as directed in *Procedure for Class I, Apparatus I*. Operate the apparatus according to the manufacturer's instructions. Heat the block until the temperature is about 10° below the expected melting point. Insert the capillary tube into the heating block, and continue heating at a rate of temperature increase of about 1°/min until melting is complete.

The temperature at which the detector signal first leaves its initial value indicates the beginning of melting, and the temperature at which the detector signal reaches its final value corresponds to the end of melting, or the melting point. The two temperatures fall within the limits of the melting range. If melting occurs with decomposition, the melting temperature corresponding to the beginning of the melting is within the range specified.

Procedure for Class Ia, Apparatus II

Prepare the test substance and charge the capillary as directed in *Procedure for Class I, Apparatus I*. Operate the apparatus according to the manufacturer's instructions. Heat the block until the temperature is about 10° below the expected melting point and is rising at a rate of about 1°/min. Insert the capillary as directed in *Procedure for Class I, Apparatus I* when the temperature is about 5° below the lower limit of the expected melting range, and continue heating until melting is complete. Record the melting range as directed in *Procedure for Class I, Apparatus I*. If melting occurs with decomposition, the melting temperature corresponding to the beginning of the melting is within the range specified.

Procedure for Class Ib, Apparatus II

Place the test substance in a closed container and cool to 10°, or lower, for at least 2 h. Without previous powdering, charge the cooled material into the capillary tube as directed in *Procedure for Class I, Apparatus I*, then immediately place the charged tube in a vacuum desiccator, and dry at a pressure not exceeding 20 mm of mercury for 3 h. Immediately upon removal from the desiccator, fire-seal the open end of the tube, and as soon as practicable proceed with the determination of the melting range as follows. Operate the apparatus according to the manufacturer's instructions. Heat the block until the temperature is about 10° below the expected melting range, then introduce the charged tube, and heat at a rate of rise of about 1°/min until melting is complete. Record the melting range as directed in *Procedure for Class I, Apparatus I*.

If the particle size of the material is too large for the capillary, precool the test substance as directed above, then with as little pressure as possible gently crush the particles to fit the capillary, and immediately charge the tube.

Procedure for Class II

Carefully melt the material to be tested at as low a temperature as possible, and draw it into a capillary tube, which is left open at both ends, to a depth of about 10 mm. Cool the charged tube at 10°, or lower, for 24 h, or in contact with ice for at least 2 h. Then attach the tube to the thermometer by suitable means, adjust it in a water bath so that the upper edge of the material is 10 mm below the water level, and heat as directed in *Procedure for Class I, Apparatus I* except, within 5° of the

expected melting temperature, to regulate the rate of rise of temperature of about 1.0°/min. The temperature at which the material is observed to rise in the capillary tube is the melting temperature.

Procedure for Class III

Melt a quantity of the test substance slowly, while stirring, until it reaches a temperature of 90°–92°. Remove the source of the heat, and allow the molten substance to cool to a temperature of 8°–10° above the expected melting point. Chill the bulb of a suitable thermometer to 5°, wipe it dry, and while it is still cold dip it into the molten substance so that approximately the lower half of the bulb is submerged. Withdraw it immediately, and hold it vertically away from the heat until the wax surface dulls, then dip it for 5 min into a water bath having a temperature NMT 16°.

Fix the thermometer securely in a test tube so that the lower point is 15 mm above the bottom of the test tube. Suspend the test tube in a water bath adjusted to about 16°, and raise the temperature of the bath at the rate of about 2°/min to 30°, then change to a rate of about 1°/min, and note the temperature at which the first drop of melted substance leaves the thermometer. Repeat the determination twice on a freshly melted portion of the test substance. If the variation of three determinations is less than 1°, take the average of the three as the melting point. If the variation of three determinations is 1° or greater than 1°, make two additional determinations and take the average of the five.

General Chapters

⟨755⟩ MINIMUM FILL

SCOPE

The following tests and specifications apply to articles such as creams, gels, lotions, ointments, pastes, powders, aerosols, and sprays that are packaged in containers. To minimize the impact of entrained air for products labeled by volume, the fill determination is performed by mass from which the volume is calculated by use of the density of the preparation.

PURPOSE

The test for minimum fill ensures that the amount of material filled into the product conforms to the labeled amount.

PROCEDURE FOR DOSAGE FORMS OTHER THAN AEROSOLS

For Containers Labeled by Weight

Select a sample of 10 filled containers, and remove any labeling that might be altered in weight during the removal of the container contents. Thoroughly cleanse and dry the outside of the containers by a suitable means, and weigh individually. Quantitatively remove the contents from each container, cutting the latter open and washing with a suitable solvent, if necessary, taking care to retain the closure and other parts of each container that were present during the initial weighing. Dry and reweigh each empty container, together with its corresponding parts. Determine the net weight of the contents of the container by difference.

For Containers Labeled by Volume

Proceed as indicated above for products labeled by weight, but convert the mass to volume using the density of the preparation. A suggested approach to determine the density of the materials is as follows:

1. Tare a 100-mL volumetric flask containing 50.0 mL of liquid which is miscible with the formulation.
2. Add approximately 25 mL of a representative sample of the product and gently swirl the contents to mix.
3. Reweigh the flask.
4. From a buret, add an accurately measured amount of the miscible liquid to bring the flask contents to volume while gently swirling the contents of the flask. Record the volume taken from the buret.
5. Calculate the density of the sample:

$$W/V$$

W = weight of the material taken (g)
V = 50.0 mL minus the volume, in mL, of the miscible fluid necessary to adjust the contents of the flask to 100 mL

Other methods of determining the density may be employed depending on the formulation (e.g., substantially nonaqueous formulations). Similarly, if the container contents are less than 25 mL, smaller graduated vessels may be used, with the quantities of miscible liquid adjusted accordingly.

Alternatively, pour the contents of 10 containers into 10 suitable graduated cylinders, and allow to drain completely. Record the volume of the contents of each of the 10 containers.

Acceptance Criteria

This test meets the acceptance criteria either at *Stage 1* or *Stage 2*:

Stage 1:

1. The average net content of the 10 containers is NLT the labeled amount, and the net content of any single container is NLT 90% of the labeled amount where the labeled amount is 60 g or 60 mL or less, or NLT 95% of the labeled amount where the labeled amount is more than 60 g or 60 mL. If these criteria are not met, and the net content of NMT 1 container is less than 90% of the labeled amount where the labeled amount is 60 g or 60 mL or less, or 95% of the labeled amount where the labeled amount is more than 60 g or 60 mL, proceed to *Stage 2*.

Stage 2:

1. Determine the content of 20 additional containers.
2. The average content of the 30 containers is NLT the labeled amount, and the net content of NMT 1 of the 30 containers is less than 90% of the labeled amount where the labeled amount is 60 g or 60 mL or less, or less than 95% of the labeled amount where the labeled amount is more than 60 g or 60 mL.

PROCEDURE FOR AEROSOLS AND SPRAYS

Select a sample of 10 filled containers, and remove any labeling that might be altered in weight during the removal of the container contents. Thoroughly cleanse and dry the outsides of the containers by suitable means, and weigh individually. Remove the contents from each container by employing any safe technique (e.g., chill to reduce the internal pressure, remove the valve, and pour). Remove any residual contents with suitable solvents, then rinse with a few portions of methanol. Retain as a unit the container, the valve, and all associated parts, and heat them at 100° for 5 min. Cool, and again weigh each of the containers together with its corresponding parts. The difference between the original weight and the weight of the empty aerosol container is the net fill weight. Determine the net fill weight for each container tested.

Acceptance Criteria

The requirements are met if the net weight of the contents of each of the 10 containers is NLT the labeled amount.

⟨761⟩ NUCLEAR MAGNETIC RESONANCE SPECTROSCOPY

INTRODUCTION

Nuclear magnetic resonance (NMR) spectroscopy is an analytical method based on the magnetic properties of certain atomic nuclei. As is the case with other types of spectroscopy, absorption or emission of electromagnetic energy at characteristic frequencies provides structural information. NMR differs from other types of spectroscopy because the discrete energy levels between which the transitions take place are present only when the nuclei are placed in a magnetic field.

Although widely recognized as one of the most powerful structure-elucidation tools available, with proper experimental design, it can also be used for accurate qualitative and quantitative measurements. See general information chapter *Applications of Nuclear Magnetic Resonance Spectroscopy* ⟨1761⟩. [NOTE—Above 1000 chapters are for informational purposes only.]

QUALIFICATION OF NMR INSTRUMENTS

Qualification of an NMR instrument can be divided into three elements: Installation Qualification (IQ), Operational Qualification (OQ), and Performance Qualification (PQ). For further discussion, see general information chapter *Analytical Instrument Qualification* ⟨1058⟩.

Installation Qualification

The IQ requirements provide evidence that the hardware and software are installed to accommodate safe and effective use of the instrument at the desired location.

Operational Qualification

In OQ, an instrument's performance is characterized using standards to verify that the system operates within target specifications. The purpose of OQ is to demonstrate that instrument performance is suitable for a given application. Because so many different approaches are available for measuring NMR spectra, OQ using standards with known spectral properties is recommended. Generally, sealed NMR tubes are available as reference standards for measuring signal-to-noise (S/N) and lineshape.

Performance Qualification

PQ helps to determine that the instrument is capable of meeting the user's requirements for all critical-to-quality (CTQ) measures. PQ documentation should describe the following:

1. The definition of the specific performance criteria and detailed test procedures including test samples and instrument parameters.
2. The elements that will be measured to evaluate the criteria and the predefined specifications.
3. The test interval, which may be time-of-use.
4. The use of bracketing samples or groups of samples.
5. The defined corrective actions that will be implemented if the spectrometer does not pass the specifications.

Periodic PQ should include a subset of the OQ tests to ensure that those aspects of the instrument that are being supplied are performing at a level that produces data that are suitable for its intended use. Depending on typical use, the specifications for PQ may be higher or lower than the manufacturer's installation specifications. Typical CTQs include S/N ratio and resolution tests for all nuclei of interest. Method-specific PQ tests, also known as system suitability tests, may be used in lieu of PQ requirements for validated procedures.

The PQ samples and tests in the following subsections are typical examples only. Other tests and samples may be used to establish specifications for specific purposes. Instrument vendors often provide samples and test parameters that can be used as part of the PQ package.

RESOLUTION AND LINESHAPE MEASUREMENT—^{1}H NMR (see *Figure 1*)

Sample: 1% chloroform in acetone-d_6 (≥ 500 MHz), 3% chloroform in acetone-d_6, degassed and sealed
Spectral width: < 1 KHz
Data acquisition time: NLT 10 s
Tip angle: 90°
Relaxation time: 60 s
Spinning rate: Static or 20 Hz
Pulse sequence: Delay-pulse-acquire with no decoupling
Processing: No line broadening, zero-filling to 128 k

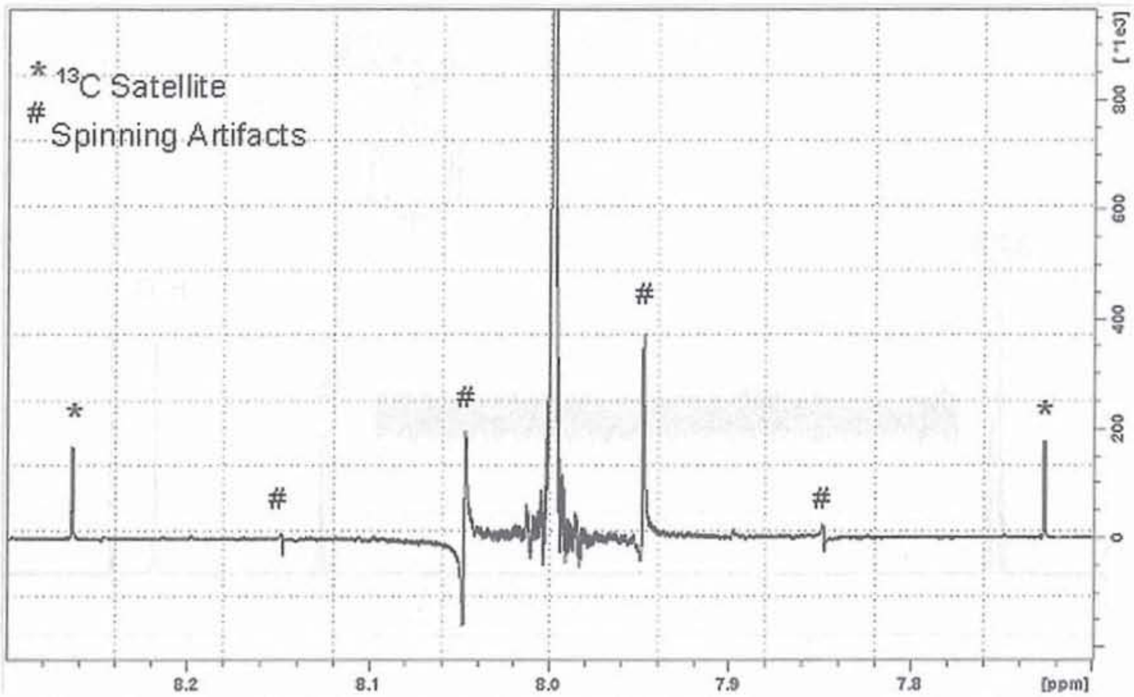

Figure 1. ^{1}H NMR spectrum of chloroform in acetone-d_6 obtained at 400 MHz. The linewidth measured at 0.55% and 0.11% of the ^{13}C satellites was 2.7 and 5.5 Hz, respectively.

Shim the magnet with special attention to the off-axis shims, acquire a single acquisition, phase to pure absorption, and measure the linewidth at 50%, 0.55%, and 0.11% maximum intensity. The linewidth should pass specifications at these positions, and, in addition, the lineshape should be Lorentzian. On modern NMR spectrometers, the lineshape is frequently obtained on a nonspinning sample because the off-axis shims can be set so well that there is essentially no difference between spectra obtained spinning and nonspinning. In addition, two-dimensional spectra should be obtained on a static sample.

S/N MEASUREMENTS—^{1}H NMR (see *Figure 2*)

Sample: 0.1% ethylbenzene in chloroform-d, 1% ethylbenzene in chloroform-d (< 200 MHz) degassed and sealed
Spectral width: 10 ppm
Data acquisition time: 400 ms
Tip angle: 90°
Relaxation delay: 60 s
Spinning rate: 0 or approximately 20 Hz
Pulse sequence: Delay-pulse-acquire with no decoupling
Processing: Exponential with 1-Hz line broadening
Referencing: Tetramethylsilane (TMS) = 0.0 ppm or the center of the quartet = 2.65 ppm

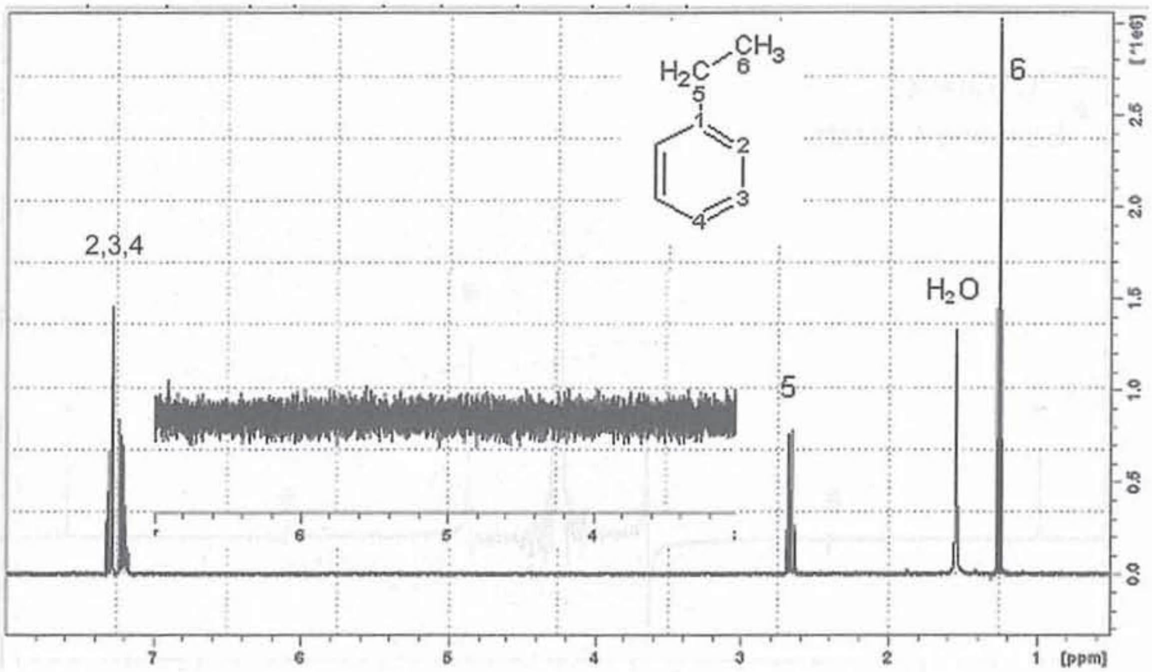

Figure 2. ¹H NMR spectrum of 0.1% ethylbenzene obtained at 400 MHz with an S/N ratio of 550:1.

The concentration of ethylbenzene should be chosen to achieve S/N ratio specifications in the range of 20–1000. Concentrations that typically result in measurements outside that range are of limited utility in assessing the performance of the instrument. Nevertheless, established standard solutions are conventionally used. The magnet should be shimmed as well as possible. Ideally, this test should be run immediately after the lineshape test because most of the shims will be nearly maximized. Acquire a single acquisition, phase the spectrum in pure absorption mode, and measure the S/N of the ethylbenzene quartet. This experiment can be run with or without sample spinning. With a spinning sample, the S/N value that is measured should be only about 10% higher than that obtained with a nonspinning sample if the off-axis shims are well adjusted. A higher ratio would indicate that the determination would benefit from further shimming with the off-axis shims.

Most modern spectrometers have software that perform the S/N measurement after the operator has identified the signal and noise regions. Manual calculations can also be made. Measure the amplitude (*A*) from the center of the baseline to the peak of the highest of the central two lines in the quartet. Measure the peak-to-peak noise height (*H*) from the lowest noise peak to the highest noise peak in the 3–5 ppm region. The noise may be vertically multiplied by a factor for accurate measurement of high S/N spectra. Calculate the S/N as follows:

$$S/N = k \times 2.5 \times A/H \qquad [1]$$

where *k* is the vertical expansion factor of the noise region used. The factor of 2.5 converts the peak-to-peak S/N to root-mean-squared (rms) noise, which is the standard convention for reporting S/N in NMR spectroscopy. Computerized S/N calculations can be used provided the specifications are set and tested by the same procedure. At the discretion of the spectroscopist, an S/N value lower than that specified by the manufacturer may be used if it is judged to be sufficient for the current application.

S/N MEASUREMENTS ¹³C NMR (see *Figure 3*)

Sample: 40% *p*-dioxane in benzene-d_6 (v/v) (degassed and sealed)
Spectral width: Approximately 200 ppm
Tip angle: 90°
Relaxation delay: 300 s
Spinning rate: Approximately 20 Hz
Pulse sequence: Delay-pulse-acquire with no decoupling
Processing: Exponential with 3.5-Hz line broadening, zero-filling to 32k
Referencing: TMS = 0.0 ppm or the center of the benzene triplet = 128.4 ppm

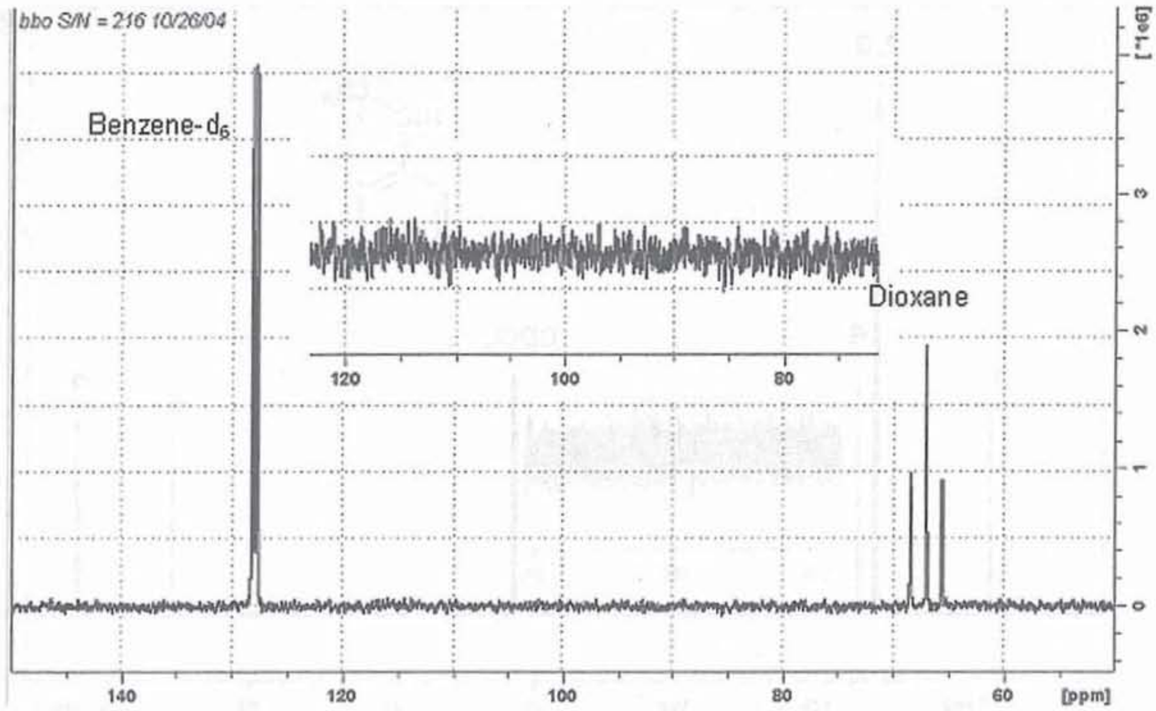

Figure 3. ^{13}C NMR spectrum of the ASTM standard 40% *p*-dioxane in benzene-d_6 (v/v) obtained at 100.6 MHz, with an S/N ratio of 140:1.

With a well-shimmed magnet, acquire a single acquisition following a minimum delay of 300 s, phase the spectrum in pure absorption mode, and measure the height of the benzene triplet at approximately 128.4 ppm from the center of the baseline. The peak-to-peak noise can be measured as above with appropriate vertical expansion of 80–120 ppm. S/N calculations can be made as in *Equation 1* or by computer calculation.

The benzene-d_6 triplet has no nuclear Overhauser enhancement (NOE). Consequently, this test verifies the performance of only the ^{13}C channel.

PERFORMANCE OF BOTH OF THE ^{13}C AND ^{1}H CHANNELS (see *Figure 4*)

Sample: up to 10% ethylbenzene in chloroform-d (degassed and sealed)
Spectral width: 200 ppm
Data acquisition length: 64k points
Tip angle: 90°
Relaxation delay: 300 s
Spinning rate: Approximately 20 Hz
Pulse sequence: Delay-pulse-acquire with composite pulse decoupling set to the center of the ^{1}H spectrum
Processing: Exponential with 0.3-Hz line-broadening
Referencing: TMS = 0.0 ppm or the center of the chloroform-d, triplet = 77.23 ppm

General Chapters

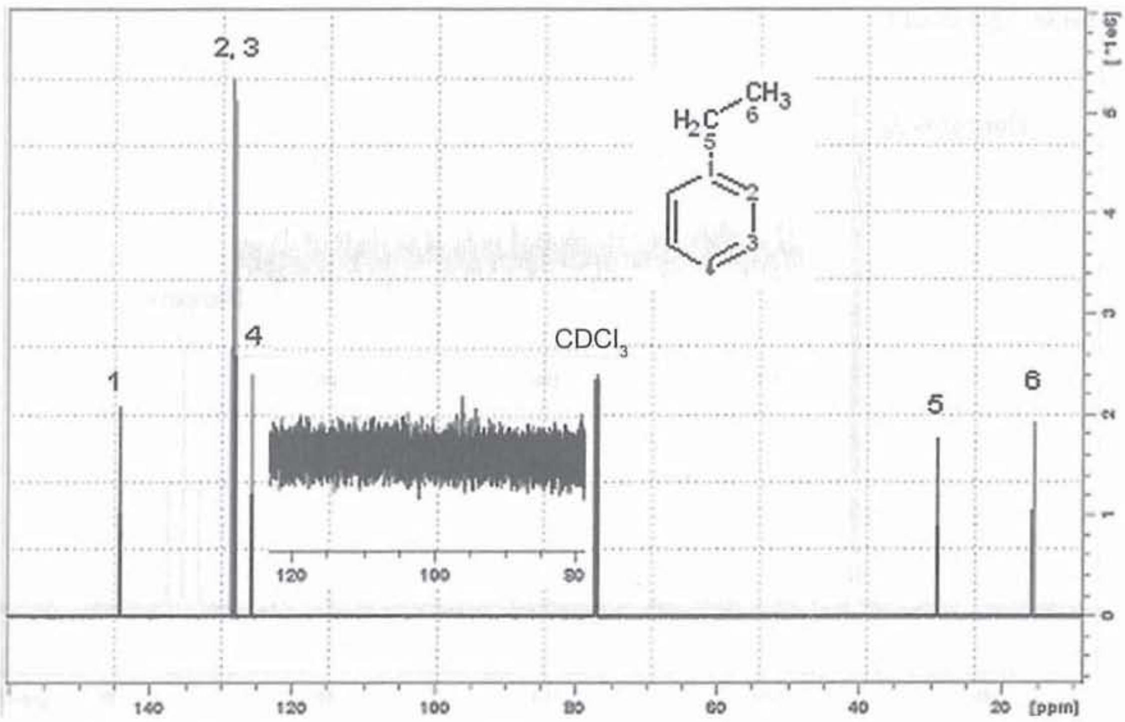

Figure 4. ^{13}C NMR spectrum of 10% ethylbenzene obtained using a cryogenically cooled dual $^{1}H/^{13}C$ probe at 150.9 MHz, with an S/N ratio of 640:1.

The shimming should be sufficient to pass the resolution and lineshape tests described above. The measurement ofS/N is done from the peak height of the larger resonance of the two near 128 ppm. The noise is measured as above in the region of 80–120 ppm, with appropriate vertical expansion. S/N is calculated by the computer or as in *Equation 1*.

RELAXOMETRY MEASUREMENTS—LOW FIELD-NMR (LF-NMR)

The PQ should be performed before the collection of experimental data.

Dissolve an accurately weighed quantity of manganese (II) chloride tetrahydrate (MW 197.91) in water, and quantitatively dilute with water to obtain check solutions that have known concentrations of 0.9, 2.7, and 4.5 mM.

Place a portion of each of the solutions into sample holders suitable for the configuration of the specific model of the LF-NMR spectrometer. Warm to 40° for NLT 10 min, and measure the spin-lattice relaxation time (T_1) of water. The average T_1 for replicate measurements must be within 5% of 156, 52, and 32 ms for the 0.9, 2.7, and 4.5 mM solutions, respectively.

Characterizing Instrument Performance

Specific procedures, acceptance criteria, and time intervals for characterizing NMR spectrometer performance depend on the instrument and its intended application. Many NMR applications use previously validated experiments that relate NMR spectra to a physical or chemical property of interest. Stable instrument performance over extended periods of time should be demonstrated. This practice provides some assurance that reliable measurements can be taken from sample spectra using previously validated NMR experiments.

QUALITATIVE AND QUANTITATIVE NMR ANALYSIS

NMR spectroscopy has been used for a wide range of applications such as structure elucidation; thermodynamic, kinetic, and mechanistic studies; and quantitative analysis. Some of these applications are beyond the scope of compendial methods.

All characteristics of the signal—chemical shift, multiplicity, linewidth, coupling constants, relative intensity, and relaxation time—contribute analytical information.

Qualitative Applications

Comparison of a spectrum from the literature or from an authentic standard with that of a test sample may be used to confirm the identity of a compound and to detect the presence of impurities that generate extraneous signals. The NMR spectra

of simple structures can be adequately described by the value of the chemical shifts and coupling constants, and by the relative number of nuclei represented by the integral of each signal. (The software of modern instruments have available programs that generate simulated spectra using these data.) Experimental details, such as the solvent used, and the chemical shift reference, must also be provided.

For unknown samples, NMR analysis, usually coupled with other analytical techniques, is a powerful tool for structure elucidation. Chemical shifts provide information on the chemical environment of the nuclei. Extensive literature is available with correlation charts and rules for predicting chemical shifts. The multiplicity of the signals provides important structural information. The magnitude of the scalar coupling constant, *J*, between residual protons on substituted aromatic, olefinic, or cycloalkyl structures is used to identify the relative position of the substituents. Routine ^{13}C spectra are obtained under proton decoupling conditions that remove all heteronuclear ^{13}C-^{1}H couplings. As a result of this decoupling, the carbon signals appear as singlets, unless other nuclei that are not decoupled are present (e.g., ^{19}F, ^{31}P).

Chemical exchange is an example of the effect of intermolecular and intramolecular rate processes on NMR spectra. If a proton can experience different environments by virtue of such a process (tautomerism, rotation about a bond, exchange equilibria, ring inversion, etc.), the appearance of the spectrum will be a function of the rate of the process. Slow processes (on an NMR time scale) result in more than one signal from the interconverting species; fast processes average these signals to one line; and intermediate processes produce broad signals, which sometimes cannot be easily found in the spectra.

The software of modern FT-NMR spectrometers allows for sequences of pulses much more complex than the repetitive accumulation of transients described above. Such experiments include homonuclear or heteronuclear *multidimensional analysis*, which determines the correlation of couplings and may simplify the interpretation of otherwise complex spectra.

See chapter 〈1761〉 for detailed descriptions of common two-dimensional experiments.

Quantitative Applications

I. General considerations of quantitative NMR: see 〈1761〉.

II. The scope of this section is limited to quantitation by one-dimensional NMR. Although any of the NMR active nuclei can be used to obtain quantitative data, the discussion here will be limited to ^{1}H. There are two kinds of quantitation by NMR: relative and absolute.

(A) **Relative quantitation** involves measurement of relative amounts of species in a sample based on integration of peaks due to each of the components measured. The integrals are normalized by factor *N*, that is, the integral is divided by the number of equivalent nuclei represented by that peak to give the relative molar concentration of each component.

(B) **Absolute quantitation** is the direct measurement of the actual amount of analyte independent of other components contained in that sample. There are two basic methods for absolute quantitation based on the kind of reference standard that is used to calibrate the NMR signal.

(1) **Internal reference standard**

(a) **Definition:** The reference standard is co-dissolved in the analyte test solution.

(b) **Procedure**

Typical NMR solution preparation: An NMR solution is prepared with exact weights of both the analyte and reference standard. The largest source of error in this quantitative NMR method is from weighing, so the use of larger weights is recommended to minimize this error. This quantitative method is based on a comparison of the reference standard and analyte NMR peaks and their respective concentrations. Since the analyte and reference standard are in the same solution, the analyte and reference standard are contained in the same volume, and only their masses are compared. Therefore, the exact volume is not required. Typically, at least three replicates are prepared.

Data acquisition: Data is acquired under quantitative conditions, see 〈1761〉. For example, the pulse repetition time should be at least 5 times the longest T_1 when a 90° pulse is used.

Data processing: Process the data, using zero-filling if necessary, such that a sufficient number of points define a peak. For example, experience has shown that at least 16 points gives a good quantitative representation of a peak.

Analysis: Integrate appropriate peaks. For example, avoid using peaks that are overlapped, or due to hydrogens capable of exchanging. The determination of the amount of analyte derives from the basic proportionality between the peak intensity and the concentration of the solute.

$$\frac{[A]_{1H}}{I_A/N_A}=\frac{[RS]_{1H}}{I_{RS}/N_{RS}} \quad [2]$$

where I = integral; N = normalization factor; and $[\ ]_{1H}$ = ^{1}H relative molar concentration, and the subscripts *A* and *RS* represent the analyte and reference standard, respectively.

The mass of the analyte is thus calculated according to the following equation.

$$M_A = \frac{I_A}{I_{RS}} \times \frac{N_{RS}}{N_A} \times \frac{MM_A}{MM_{RS}} \times M_{RS} \times P \quad [3]$$

where M_A = mass of the analyte, MM = molar mass, and P = purity of the reference standard.

(c) A common application of absolute quantitation is the determination of the purity of a sample. The weight % purity is given by

$$weight\,\%\,purity = \frac{M_A}{M_S} \times 100\% \quad [4]$$

where M_S is the total mass of the sample with contributions from the analyte plus any contaminants that may be present in the sample such as water and salts. Combining *Equations 3* and *4*, the weight % purity is given by

$$weight\,\%\,purity = \frac{I_A}{I_{RS}} \times \frac{N_{RS}}{N_A} \times \frac{MM_A}{MM_{RS}} \times \frac{M_{RS}}{M_S} \times P \times 100 \quad [5]$$

(2) **External reference standard**

(a) **Definition:** The classical external reference standard method consists of solutions of a reference standard and analyte that are each in separate NMR tubes. One variation of an external reference standard is the standard test solution contained in a coaxial tube and is inserted into an analyte test solution contained in an NMR tube. Another variation is the introduction of a computer-generated signal into the spectrum of a reference standard solution of known concentration to calibrate the signal's response (intensity per ^1H molar concentration, in the case of ^1H NMR), followed by insertion of that calibrated computer-generated signal into the spectrum of an analyte test solution. This section will address the use of an external reference in the classical sense.

(b) **Procedure**

NMR solution preparation: NMR solutions of known concentrations of each of the analyte and reference standard are prepared using exact weights and volumes. Again, the use of larger weights is recommended to minimize the weighing error. Typically replicates of the analyte solutions and reference standard solutions are prepared. The analyte and reference must be prepared in the same solvent to minimize probe tuning differences.

Data acquisition and processing: Same as in II.B.1.b, internal reference standard. Apply the same acquisition and processing parameters to the analyte and reference standard spectra.

Analysis: Integrate appropriate peaks in the spectra of the analyte and reference standard. The amount of analyte is calculated according to the following equation:

$$M_A = \frac{I_A}{I_{RS}} \times \frac{N_{RS}}{N_A} \times \frac{V_A}{V_{RS}} \times \frac{MM_A}{MM_{RS}} \times M_{RS} \times P \quad [6]$$

where V = volume.

Application to weight % purity: Weight % purity values may be similarly calculated as in *Equation 5*.

(C) The internal and external reference standard methods each have their own set of advantages and disadvantages.

(1) **Chemical interactions:** Preparation of the reference standard and the test material in separate solutions avoids chemical interactions between the test sample and reference standard that may otherwise occur with an internal reference standard.

(2) **Spectral overlap:** The use of an external reference standard also avoids potential overlap between peaks of the reference standard and test sample that can occur with an internal standard.

(3) **Calibration:** Once an NMR response has been calibrated with external reference standard solutions, this calibration may be applied to any other sample in the same solvent given that i) the instrument has been demonstrated to be stable over the time between when the calibration is done and when data is acquired on the test material, ii) system suitability has been established on the day that the measurement on the test material is made, and iii) absolute integrals are compared. In the case of internal reference standards, the measurement on the reference standard and test sample is made under absolutely identical conditions.

(4) **Accuracy and precision:** Multiple external reference standard solutions may be prepared to average the errors in the mass and volume measurements during sample preparation, thereby improving the accuracy of the calibrated NMR response. In the case of internal reference standards, single measurements of the reference standard and analyte are made for each replicate test solution. The combined errors from the mass measurements of the reference standard and test sample as well as instrumental electronic variations determine the standard deviation of the average M_A or weight % purity values.

VALIDATION AND VERIFICATION OF NMR ANALYTICAL PROCEDURES

If an NMR procedure is provided in a monograph, verification of suitability (see ⟨1226⟩) under actual conditions of use is required. Validation is required only when an NMR method is an alternative to the official procedure for testing an official article. The objective of validation of a procedure relying on the NMR method is to demonstrate that the measurement is suitable for its intended purpose, including the following: quantitative determination of the main component in a drug substance or a drug product (Category I assays), quantitative determination of impurities (Category II), and identification tests (Category IV). [NOTE—For a definition of the different categories, see *Validation of Compendial Procedures* ⟨1225⟩.] Depending on the category of the test, analytical procedure validation requires the testing of specificity, linearity, range, accuracy, precision, quantitation limit, and robustness. These analytical performance characteristics apply to externally standardized methods and to the method of standard additions.

Chapter ⟨1225⟩ provides definitions and general guidance on analytical procedures validation without indicating specific validation criteria for each characteristic. The intention of the following sections is to provide the user with specific validation criteria that represent the minimum expectations for this technology. For each particular application, tighter criteria may be needed in order to demonstrate suitability for the intended use.

Analytical Procedure Validation

The objective of an analytical procedure validation is to demonstrate that the analytical procedure is suitable for its intended purpose by conducting experiments and obtaining results that meet predefined acceptance criteria. NMR analytical procedures can include the following: quantitative tests for major component and impurities content, limit tests for the presence of impurities, quantification of component in a product or formulation, and/or identification tests.

Performance characteristics that demonstrate the suitability of an analytical procedure are similar to those required for any analytical procedure. A discussion of the applicable general principles is found in chapter ⟨1225⟩. Specific acceptance criteria for each validation parameter must be consistent with the intended use of the analytical procedure.

The performance characteristics that are required as part of a validation for each of the analytical procedure categories is given below.

SPECIFICITY

The purpose of a specificity test is to demonstrate that measurements of the intended analyte signals are free of interference from components and impurities in the test material. Specificity may be applied to all categories and is a requirement for Category IV. Specificity tests can be conducted to compare NMR spectra of other components and impurities that are known from synthetic processes and formulations and test preparations. For an identification NMR analytical procedure (Category IV), validation experiments may include multidimensional NMR experiments to validate correct assignments of chemical shifts and to confirm the structure of the analyte.

Validation criteria: Specificity is ensured by use of a reference standard wherever possible and demonstrable lack of interference from other components.

LINEARITY

A linear relationship is exhibited between the analyte concentration and instrument response; this should be demonstrated by measuring responses of analyte from NLT five standard solutions at concentrations encompassing the anticipated concentration range of analyte(s) of the test solution. For Category I, standard solutions can be prepared from reference materials in an appropriate NMR solvent. For Category II, NMR analytical procedures that are used to quantitate impurities, linearity samples can be prepared by spiking suitable test samples that contain low amounts of analyte or by spiking matrix samples at concentrations of the expected range. The standard curve should then be constructed using appropriate statistical analytical procedures such as a least squares regression. The correlation coefficient (R), y-intercept, and slope of the regression line should be determined. Absolute values determined for these factors should be appropriate for the procedure being validated.

Validation criteria: The correlation coefficient (R) must be NLT 0.995 for Category I assays and NLT 0.99 for Category II quantitative tests.

RANGE

The range between the low and high concentrations of analyte is given by the quantitative NMR analytical procedure. This is normally based on test article specifications in the *USP* monograph. It is the range within which the analytical procedure can demonstrate an acceptable degree of linearity, accuracy, and precision, and may be obtained from an evaluation of that analytical procedure. Recommended ranges for various NMR analytical procedures are given below.

Validation criteria: For Category I tests, the validation range for 100.0% centered acceptance criteria is 80.0%–120.0%. For noncentered acceptance criteria, the validation range is 10.0% below the lower limit to 10.0% above the upper limit. For

content uniformity, it is 70.0%–130.0%. For Category II quantitative tests, the validation range covers 50.0%–120.0% of the acceptance criteria.

ACCURACY

The accuracy of a quantitative NMR analytical procedure should be determined across the required analytical range. Typically, three levels of concentrations are evaluated using triplicate preparations at each level.

For drug substance assays (Category I), accuracy can be determined by analyzing a reference standard of known purity. For drug product (Category I), a composite sample of reference standard and other components in a pharmaceutical finished product should be used for analytical procedure validation. The assay results are compared to the theoretical value of the reference standard to estimate errors or percent recovery. For the quantitation of impurities (Category II), the accuracy of the analytical procedure can be determined by conducting studies with drug substances or products spiked with known concentrations of the analyte under test. It is also acceptable to compare assay results from the analytical procedure being validated to those of an established, alternative analytical procedure.

Validation criteria: 98.0%–102.0% recovery for drug substances, 95.0%–105.0% recovery for compounded pharmaceutical finished products assay, and 80.0%–120.0% recovery for the quantitative impurity analysis. These criteria should be met throughout the intended range.

PRECISION

Repeatability: The analytical procedure should be assessed by measuring the concentrations of six separate standard solutions at 100% of the test concentration. The relative standard deviation from the replicate measurements should be evaluated to meet acceptance criteria. Alternatively they can measure the concentrations of three replicates of three separate sample solutions at different concentrations. The three concentrations should be close enough so that the repeatability is constant across the concentration range. If this is done, the repeatability at the three concentrations is pooled for comparison to the acceptance criteria.

Validation criteria: The relative standard deviation is NMT 1.0% for drug substances, NMT 2.0% for compounded pharmaceutical finished products, and NMT 20.0% for the quantitative impurity analysis.

Intermediate precision: The effect of random events on the analytical precision of the analytical procedure should be established. Typical variables include performing the analysis on different days, using different instrumentation that are suitable as specified in the analytical procedure, and/or having the analytical procedure performed by two or more analysts. As a minimum, any combination of at least two of these factors totaling six experiments will provide an estimation of intermediate precision.

Validation criteria: The relative standard deviation is NMT 1.0% for drug substances, NMT 3.0% for compounded pharmaceutical finished products, and NMT 25.0% for quantitative impurity analysis.

QUANTITATION LIMIT (QL)

The QL can be validated by measuring six replicates of test samples spiked with analyte at 50% of specification.

From these replicates, accuracy and precision can be determined. Examples of specifications for Category II quantitative determinations are that the measured concentration is within 70.0%–130.0% of the spike concentration and the relative standard deviation is NMT 15%.

ROBUSTNESS

The reliability of an analytical measurement should be demonstrated with deliberate changes to critical experimental parameters. This can include measuring the stability of the analyte under specified storage conditions, slightly varied inter-pulse delay, probe temperature, and possible interfering species, to list a few examples. Robustness is required for Category I and Category II, quantitative methods.

Analytical Procedure Verification

U.S. Current Good Manufacturing Practices regulations [21 CFR 211.194(a)(2)] indicate that users of analytical procedures described in *USP–NF* do not need to validate these procedures if provided in a monograph. Instead, they must simply verify their suitability under actual conditions of use.

The objective of an NMR procedure verification is to demonstrate that the procedure as prescribed in a specific monograph can be executed by the user with suitable accuracy, specificity, and precision using the instruments, analysts, and sample matrices available. According to general information chapter *Verification of Compendial Procedures* ⟨1226⟩, if the verification of the compendial procedure by following the monograph is not successful, the procedure may not be suitable for use with the arti-

cle under test. It may be necessary to develop and validate an alternative procedure as allowed in *General Notices and Requirements 6.30*.

Verification of a compendial NMR procedure should at minimum include the execution of the validation parameters for specificity, accuracy, precision, and limit of quantitation, when appropriate, as indicated in this section.

GLOSSARY

Internal standard: An internal standard (IS) is a substance added to a sample solution at a known concentration. One should select an IS with at least a single NMR resonance that does not overlap with those of the analyte. The ratio of a specific internal standard peak area and that of an analyte peak area is used to determine the concentration of the analyte. The number of nuclei corresponding to the integrated peaks in the IS and analyte spectra must be known.
NMR reference: An NMR reference, also known as an NMR shift reference, is a substance added to a sample and from which the chemical shift for the δ scale is established. Common examples for proton and carbon NMR analyses are tetramethylsilane (TMS) for use in organic solvents and the sodium salt of 2,2-dimethyl-2-silapentane-5-sulfonic acid (DSS) or sodium-3-trimethylsilylpropionate (TMSP) for use in aqueous media. In both cases, the chemical shift of the methyl peaks is defined as 0.0 ppm.
Reference standard: A reference standard is a substance authenticated by appropriate experimental means to be of a specific chemical structure. In NMR spectroscopy, a reference standard is typically used for the qualitative analysis of a test material. Structure can be confirmed if one directly compares the chemical shifts and multiplicities of the peaks in the NMR spectrum of the test material against the spectrum of the reference standard acquired under comparable experimental conditions.

⟨771⟩ OPHTHALMIC PRODUCTS—QUALITY TESTS

INTRODUCTION

Ophthalmic products are sterile products that are intended for application to any ocular structure, including any space adjacent to an ocular structure and its immediate surrounding spaces.

The routes of administration of ophthalmic products fall into three general categories: topical, intraocular injections, and extraocular injections. Topical drug products are intended to be administered to an ocular surface component, such as the eyelid, conjunctiva, or cornea, and can produce local or systemic effects. Intraocular and extraocular injections are administered through external boundary tissue. The ophthalmic routes of administration include, but are not limited to: topical, subconjunctival, sub-tenons, subretinal, subchoroidal, intracorneal, intrascleral, suprachoroidal, intravitreal, intracameral, juxtascleral, and retrobulbar routes (see *Figure 1*). Ophthalmic products are administered to the eye in a wide variety of dosage forms, including but not restricted to: solutions, suspensions, ointments, gels, emulsions, strips, injections, inserts, and implants.

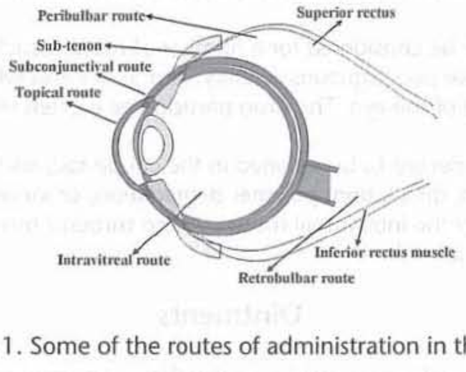

Figure 1. Some of the routes of administration in the eye.

This chapter provides lists of consolidated common product quality test requirements in a concise and coherent fashion. This chapter applies, in part or in its entirety, when referenced in a drug product monograph (see *General Notices, 3.10 Applicability of Standards*). The chapter includes the quality tests for the specific route of administration. The quality tests listed can be used, as appropriate, by manufacturers toward the development of new drug product monographs for submission to the *USP–NF*.

NOTE—All references to chapters above ⟨1000⟩ are for information purposes only, for use as a helpful resource. These chapters are not mandatory unless explicitly called out for application.

OPHTHALMIC DOSAGE FORMS

This chapter discusses the specific characteristics of dosage forms that are administered to any structure in the eye. See *Pharmaceutical Dosage Forms* ⟨1151⟩ for additional information pertaining to the description and manufacturing of pharmaceutical dosage forms.

Ophthalmic products have the same or similar requirements as injectables and implants. For more information on the requirements for these dosage forms, see *Injections and Implanted Drug Products* ⟨1⟩.

Depending on the formulation, container–closure system, and sterilization process, degradation and/or morphological changes can occur during the sterilization step of the manufacturing process and should be minimized. Temperatures required for autoclaving can cause irreversible damage to certain dosage forms such as suspensions, semisolids, emulsions, and others, whereas filtration is applicable only to formulations containing particulates with particle sizes <0.2 µm. An alternative is to manufacture the product from sterile ingredients in an aseptic environment.

For multidose products, a suitable antimicrobial preservative is required, and its effectiveness over the shelf life of the product must be verified.

Solutions

[NOTE—Included in this section are those solid products that, when reconstituted according to the label instructions, result in a solution.]

The corneal contact time of topical ophthalmic solutions increases with the viscosity of the formulations. Several synthetic polymers, including but not limited to polyvinylalcohol, polyvinylpyrrolidone, polyethylene glycol, polyacrylic acid, and many cellulose derivatives such as hypromellose and hydroxyethylcellulose, are commonly used as viscosity enhancers because of their physiologic compatibility and satisfactory physicochemical properties.

Another approach to increase the corneal contact time involves the use of polymers that provide the liquid formulation with semisolid consistency only when it is placed in the conjunctival or corneal area. In this way, easy instillation of the solution is followed by prolonged permanence as a result of the viscoelastic properties of the formed hydrogel. "Hydrogel", or "water-based gels", are three-dimensional networks of polymer chains containing water within the network. The network can be either physically or chemically cross-linked (a covalent bonding) structures between polymer chains. The water content of hydrogels can be adjusted by modulating the composition and conformation of polymers, such as the hydrophilic/hydrophobic balance of polymer chains and pendant groups, and the degree of cross-linking. The in situ gelling phenomenon is caused by a change in the conformation of the polymer(s) that can be triggered by external stimuli such as temperature, pH, ionic content, and lacrimal fluid, upon delivery to the eye. Additionally, some polymers can interact, via noncovalent bonds, with conjunctival mucin and maintain the formulation in contact with corneal tissues.

Solutions can be injected not only by the intravitreal route but also by other routes, such as subconjunctival, sub-tenons, retrobulbar, suprachoroidal, and subretinal routes.

Suspensions

[NOTE—Included in this section are those solid products that, when reconstituted according to the label instructions, result in a suspension.]

Use of aqueous or oily suspensions may be considered for a number of reasons such as the following: 1) for drugs that are poorly water soluble, 2) for drugs that have poor aqueous stability, and 3) in cases where there is a need to increase contact time with the eye and to increase wetting of the eye. The drug particle size is often reduced to levels <10 µm in an attempt to avoid excessive lacrimation.

After topical instillation, particles are expected to be retained in the cul-de-sac, and the drug slowly dissolves or is released from the polymeric structures by diffusion, dissolution, polymer degradation, or ion-exchange.

Suspensions can be injected not only by the intravitreal route but also through other routes, such as subconjunctival, sub-tenons, retrobulbar, suprachoroidal, and subretinal.

Ointments

Eye ointments are semisolid products usually intended for application to the conjunctiva, cornea, or eyelid. They have longer contact time when compared to many solutions. A suitable ophthalmic ointment base is nonirritating to the eye and permits diffusion of the drug substance throughout the secretions bathing the eye.

The majority of water-free, oleaginous eye ointment bases are composed of white petrolatum and liquid petrolatum (mineral oil), or the eye ointment base is a modification of the petrolatum-based formula. They are designed to melt at body temperature. Other types of lipophilic ointment bases can also be used. An anhydrous vehicle can be advantageous for moisture-sensitive drugs.

Gels

Semisolid gel-type products are an alternative to traditional ointments and are based on the effect of increasing the viscosity to prolong the retention of the drug in the eye. Several types of gelling agents can be used, such as polyacrylic acid derivatives, carbomer, and hypromellose.

Emulsions

Topical ophthalmic emulsions are generally prepared by dissolving or dispersing the drug substance into an oil phase, adding suitable emulsifying and suspending agents, and mixing with water vigorously to form a uniform oil-in-water emulsion. Each phase is typically sterilized before or during charging into the mixing vessel. High-shear homogenation may be used to reduce oil droplet size to submicron size, which may improve the physical stability of the oil micelles so that they do not coalesce. The resulting dosage form should contain small oil droplets, uniformly suspended.

Limited aqueous solubility of the drug substance(s) is the most common rationale for developing an ophthalmic emulsion. The drug substance(s) can be added to the phase in which it is soluble at the beginning of the manufacturing process, or the drug substance can be added after the emulsion is prepared by a suitable dispersion process.

The physical stability of the emulsion can be measured by light-scattering techniques that characterize oil-phase, globule-size distribution. Suitable surfactants may be added to improve emulsion stability.

Strips

Ophthalmic strips can have different ophthalmic uses including, but not limited to, use as a diagnostic tool to visualize defects or aberrations in the corneal epithelium or to measure the amount of tear production. They are made of filter paper, and they can contain compounds such as fluorescein sodium. They are individually packed to preserve sterility until the moment of use.

Injections

Although injections are considered a dosage form for nomenclature purposes, they are not treated as a dosage form in this chapter. Instead, refer to the appropriate physical form, such as solution, suspension, or others, for general information.

Inserts

Ophthalmic inserts and ocular systems are solid dosage forms of appropriate size and shape that are placed in the conjunctival fornix, in the lacrimal punctum (*Figure 2*), or on the cornea. Inserts can usually be removed, if adverse effects develop, and provide extended release of the drug over a certain period of time. Inserts can be classified as erodible (soluble) or nonerodible (insoluble). Drug release from soluble inserts involves two steps: 1) fast release of a portion of the drug as the tear fluid penetrates into the system, and 2) slow release as a gel layer is formed on the surface of the insert. Collagen shields made from porcine sclera collagen or bovine corium tissue—and devices obtained by molding, extrusion, or compression (minitablets) of gelling polymers—belong to this category of soluble inserts. Bioerodible polymers (e.g., cross-linked gelatin derivatives and polyesters) can be used to prepare erodible inserts; these matrices act as reservoirs or interact with the drug molecules through labile bonds.

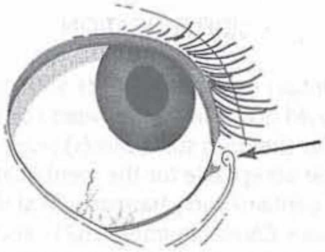

Figure 2. Lacrimal punctum.

Soluble inserts can have the drug incorporated into an erodible matrix, such as hydroxypropyl cellulose, hyaluronic acid, carbomer, or polyacrylic acid. Soluble inserts may be placed in the lower cul-de-sac and generally dissolve within 12–24 h. Erodible polymeric products undergo gradual dissolution while releasing the drug, and the patient does not have to remove the erodible polymeric insert after use.

Insoluble inserts can have a reservoir or matrix structure. Their mechanism of action is based on diffusion of a fluid into the device, dissolving of the drug, and the creation of a saturated solution released to the medium by diffusion out of the insert. These insoluble inserts need to be removed after a certain period of time.

Implants

Implants are injected or implanted into the anterior segment (intracameral, subconjunctival, sub-tenon, or other parts of the anterior segment) or intravitreal cavities, and the implants can be in different shapes, such as a disk or a thin rod. Implants can be made of nonbiodegradable or biodegradable polymers.

Among the types of nonbiodegradable solid (polymer) implants are reservoir-type implants anchored to the sclera, in which the drug is released across a nonbiodegradable, semipermeable polymer. The reservoir-type implants can be made of a variety of materials, including polyvinyl alcohol–ethylene vinyl acetate. Biodegradable polymers can be used to form injectable solid implants.

Drug–Device Combination Products

An ophthalmic drug–device combination product is constituted, in most cases, of two components. One is a pharmaceutical dosage form containing the drug substance(s), and the other is a device that will activate or facilitate the penetration of the drug substance(s) from the dosage form into a particular region of the eye. Some examples of the devices are those that generate waveforms (heat or light).

This chapter is applicable only to the pharmaceutical dosage form component of the ophthalmic drug–device combination product. The appropriate FDA regulations regarding medical devices should be used for the device component.

DRUG PRODUCT QUALITY

Procedures and acceptance criteria for testing ophthalmic products are divided into two categories: 1) those that assess general quality attributes, e.g., identification, potency, purity (and impurities), sterility, and particulate matter; and 2) those that assess in vitro product performance, i.e., dissolution or drug release of the drug substance from the drug product. Quality tests assess the integrity of the dosage form, whereas the performance tests assess drug release and other attributes that relate to in vivo drug performance. Taken together, quality and performance tests ensure the identity, strength, quality, purity, and efficacy of the drug product. This chapter addresses the quality tests for ophthalmic products. The performance tests (dissolution/drug release) are addressed by *Ophthalmic Products—Performance Tests* ⟨1771⟩.

Universal Tests

In this chapter, the division of the product quality tests into universal and specific tests does not strictly follow the ICH guidance *Q6A Specifications: Test Procedures and Acceptance Criteria for New Drug Substances and New Drug Products: Chemical Substances* (available at www.ich.org). Universal tests in this chapter mean the tests that are applicable to all ophthalmic products, regardless of the dosage form type.

DESCRIPTION

A qualitative description of the drug product should be provided. The acceptance criteria should contain the final acceptable appearance, including clarity and color, of the dosage form and packaging. If the color changes during storage, a quantitative procedure may be appropriate. This is not a compendial test but is part of the manufacturer's specification of the drug product.

IDENTIFICATION

Identification tests are discussed in *General Notices and Requirements 5.40*. Identification tests should establish the identity of the drug or drugs present in the article and should discriminate between compounds of closely related structures that are likely to be present. Identity tests should be specific for the drug substance(s) [e.g., infrared (IR) spectroscopy]. Near-infrared (NIR) or Raman spectrophotometric methods could be acceptable for the identification of the drug product. The most widely used identification procedures for drug substance(s) contained in pharmaceutical dosage forms are chromatographic procedures with comparison to the appropriate standards (see *Chromatography* ⟨621⟩ and *Thin-Layer Chromatographic Identification Test* ⟨201⟩). Identification by use of a single chromatographic retention time does not constitute a specific test.

ASSAY

A specific and stability-indicating test should be used to determine the strength (content) of the drug product. In cases where the use of a nonspecific assay test is justified, other supporting analytical procedures should be used to achieve overall specificity. A specific procedure should be used when there is evidence of excipient interference with the nonspecific assay test. Additional information on specific assays may be found in *Antibiotics—Microbial Assays* ⟨81⟩, ⟨621⟩, and *Ion Chromatography* ⟨1065⟩.

IMPURITIES

Process impurities, synthetic byproducts, and other inorganic and organic impurities may be present in the drug substance and excipients used in the manufacture of the drug product. These impurities are controlled by the drug substance and excipient monographs. Organic impurities arising from the degradation of the drug substance in the drug product and those impurities arising during the manufacturing process of the drug product should be monitored. All articles meet the requirements in *Elemental Impurities—Limits* 〈232〉 and *Residual Solvents* 〈467〉.

PH

See *pH* 〈791〉. Normal tears have a pH of about 7.4. The eye can tolerate products over a range of pH values from about 3.0 to about 8.6, depending on the buffering capacity of the formulation. The pH value of the formulation should be the one where the drug product is the most stable. Formulations that target the extremes of the acceptable pH range will have better patient acceptability if the formulations have a low buffering capacity.

OSMOLARITY

See *Osmolality and Osmolarity* 〈785〉. Ophthalmic products may be tolerated over a fairly wide range of tonicity (0.5%–5% sodium chloride, equivalent to about 171–1711 mOsm/kg). Hypotonic solutions are better tolerated than hypertonic solutions. Precautions should be taken to ensure that the product maintains its osmolarity during shelf life. Any possible contributions or interferences from the packaging system should be considered.

PARTICULATE AND FOREIGN MATTER

All ophthalmic products should be inspected for package integrity and, to the extent possible, for the presence of observable foreign and particulate matter (visible particulates). These unwanted particles arise from two sources: extrinsic (i.e., foreign matter); and intrinsic, or product-related matter. Extrinsic matter cannot be associated with the product or process. Intrinsic particles are added during assembly of the product or result from a change over time. A third category, inherent matter, describes a physical state or particles that are an expected attribute of the product.

One hundred percent inspection of injectable products in clear packages is required to remove final packages with visible particles. When 100% inspection of the injectable product in the final package is difficult, such as in opaque containers, alternative methods may be used to determine acceptability. *Visible Particulates in Injections* 〈790〉 provides further guidance for general inspection methods and a definition of "essentially free of visible particles" for batch compliance.

Two general categories apply for product administration to the tissues in the eye. Intraocular administration includes all ophthalmic products that cross (penetrate) boundary tissue, such as the cornea and sclera. Extraocular administration of ophthalmic products includes all other ocular components and spaces. For subvisible particle content, USP guidance is followed. Products for intraocular use must comply with *Particulate Matter in Ophthalmic Solutions* 〈789〉. Products for extraocular use must comply with *Particulate Matter in Injections* 〈788〉. Considerations for product evaluation and the background for both subvisible methods are found in *Methods for the Determination of Particulate Matter in Injections and Ophthalmic Solutions* 〈1788〉.

STERILITY

Ophthalmic dosage forms must meet the requirements of *Sterility Tests* 〈71〉. If the specific ingredients used in the formulation do not lend themselves to routine sterilization techniques, ingredients that meet the sterility requirements described in 〈71〉, along with aseptic manufacture, may be used. The immediate container for ophthalmic products shall be sterile at the time of filling and closing. It is mandatory that the immediate containers for ophthalmic products be sealed and tamper proof so that sterility is ensured at the time of first use.

ANTIMICROBIAL PRESERVATIVES

Antimicrobial agents must be added to products that are packaged in containers that allow for the withdrawal or administration of multiple doses, unless one of the following conditions prevails: 1) there are different directions in the individual monograph; 2) the substance contains a radionuclide with a physical half-life of <24 h; and 3) the drug product, without additional agents, is sufficiently microbicidal to meet the requirements of *Antimicrobial Effectiveness Testing* 〈51〉. Substances must meet the requirements of 〈51〉 and *Antimicrobial Agents—Content* 〈341〉. Acceptance criteria for antimicrobial preservative content in multiple-unit products should be established.

General Chapters

BACTERIAL ENDOTOXINS

All injected ophthalmic drug products shall be prepared in a manner designed to minimize bacterial endotoxins as defined in *Bacterial Endotoxins Test* ⟨85⟩. The limits are NMT 0.5 EU/mL for ophthalmic irrigation products and NMT 2.0 EU/dose/eye for injected or implanted drug products. Typically, this test is not required for topically applied ophthalmic products. This chapter does not address the endotoxin limits for devices that are injected or implanted.

UNIFORMITY OF DOSAGE UNITS

This test is applicable to dosage forms packaged in single-unit containers. It includes both the mass of the dosage form and the content of the drug substance(s) in the dosage form. The test can be performed by either content uniformity or weight variation (see *Uniformity of Dosage Units* ⟨905⟩).

CONTAINER CONTENTS

Container contents of ophthalmic products should be determined (see *Minimum Fill* ⟨755⟩).

LEACHABLES AND EXTRACTABLES

The packaging system should not interact physically or chemically with the product in any manner to alter the strength, quality, or purity of the drug product. The packaging system should meet the requirements in *Elastomeric Closures for Injections* ⟨381⟩, *Containers—Glass* ⟨660⟩, *Plastic Materials of Construction* ⟨661.1⟩, and *Plastic Packaging Systems for Pharmaceutical Use* ⟨661.2⟩. Further information regarding packaging systems testing can be found in *Assessment of Extractables Associated with Pharmaceutical Packaging/Delivery Systems* ⟨1663⟩ and *Assessment of Drug Product Leachables Associated with Pharmaceutical Packaging/Delivery Systems* ⟨1664⟩. The assessment of possible leachables and/or extractables and the establishment of any acceptance criteria for these compounds should take into account the risk assessment of the product, its indication, and its packaging system.

Furthermore, it should be noted that a risk assessment of extractable/leachable impact on topical or intraocular route of administration is a challenging undertaking. Toxicological or safety assessments of primary or secondary packaging component extractables and leachables are not typically available for ophthalmic routes of administration. A risk assessment may include evaluation of toxicology and safety from other routes of administration and an assessment of the Total Daily Intake of the extractable/leachable being evaluated. The preponderance of such assessments leads to an estimate of extractable/leachable risk via ocular delivery to the patient.

CONTAINER–CLOSURE INTEGRITY

The packaging system should be closed or sealed in such a manner as to prevent contamination or loss of contents and should provide evidence of being tamper proof. Validation of container integrity must demonstrate no penetration of microbial contamination or of chemical or physical impurities (see *Package Integrity Evaluation—Sterile Products* ⟨1207⟩).

Specific Tests

VISCOSITY

An increase in viscosity increases the residence time in the eye. However, drug diffusion out of the formulation into the eye may be inhibited due to high product viscosity. Ophthalmic ointments are designed to be of very high viscosity to prolong the residence time in the eye. The inclusion of viscosity evaluation in the specification of the product should be based on the type of dosage form and whether changes in product viscosity will affect its performance. This is not a compendial test but is part of the manufacturer's specification of the drug product. See *Viscosity—Capillary Methods* ⟨911⟩, *Viscosity—Rotational Methods* ⟨912⟩, and *Viscosity—Rolling Ball Method* ⟨913⟩.

ANTIOXIDANT CONTENT

If antioxidants are present in the drug product, tests of their content should be established, unless oxidative degradation can be detected by another test method such as impurity testing. Acceptance criteria for antioxidant content should be established. They should be based on the levels of antioxidant necessary to maintain the product's stability at all stages throughout its proposed usage and shelf life.

RESUSPENDABILITY/REDISPERSIBILITY

Consideration must be given to establishing good physical stability of a suspension. If the particles settle and eventually produce a cake at the bottom of the container, they must redisperse readily at the time of use to achieve dosage uniformity.

PARTICLE SIZE AND PARTICLE SIZE DISTRIBUTION

The potential for any changes in the particle size of ophthalmic suspensions and emulsions needs to be evaluated through stability testing (see *Light Diffraction Measurement of Particle Size* 〈429〉).

DROP SIZE

For ophthalmic drug products dispensed as drops, drop sizes may typically range from 20 to 70 µL. Drop size can be controlled by weight or by volume, and it is typically evaluated during product development.

ADDED SUBSTANCES

Suitable substances may be added to ophthalmic products to increase stability, unless proscribed in the individual monograph, provided they are harmless in the amounts administered and do not interfere with therapeutic efficacy or with responses to the specified assays and tests. Typically, they should be evaluated during product development. The use of ingredients solely to impart a color, odor, or flavor is prohibited.

〈776〉 OPTICAL MICROSCOPY

Optical microscopy for particle characterization can generally be applied to particles 1 µm and greater. The lower limit is imposed by the resolving power of the microscope. The upper limit is less definite and is determined by the increased difficulty associated with the characterization of larger particles. Various alternative techniques are available for particle characterization outside the applicable range of optical microscopy. Optical microscopy is particularly useful for characterizing particles that are not spherical. This method may also serve as a base for the calibration of faster and more routine methods that may be developed.

APPARATUS

Use a microscope that is stable and protected from vibration. The microscope magnification (product of the objective magnification, ocular magnification, and additional magnifying components) must be sufficient to allow adequate characterization of the smallest particles to be classified in the test specimen. The greatest numerical aperture of the objective should be sought for each magnification range. Polarizing filters may be used in conjunction with suitable analyzers and retardation plates. Color filters of relatively narrow spectral transmission should be used with achromatic objectives, are preferable with apochromats, and are required for appropriate color rendition in photomicrography. Condensers corrected at least for spherical aberration should be used in the microscope substage and with the lamp. The numerical aperture of the substage condenser should match that of the objective under the conditions of use and is affected by the actual aperture of the condenser diaphragm and by the presence of immersion oils.

ADJUSTMENT

The precise alignment of all elements of the optical system and proper focusing are essential. The focusing of the elements should be done in accordance with the recommendations of the microscope manufacturer. Critical axial alignment is recommended.

ILLUMINATION

A requirement for good illumination is a uniform and adjustable intensity of light over the entire field of view; Kohler illumination is preferred. With colored particles, choose the color of the filters used so as to control the contrast and detail of the image.

VISUAL CHARACTERIZATION

The magnification and numerical aperture should be sufficiently high to allow adequate resolution of the images of the particles to be characterized. Determine the actual magnification using a calibrated stage micrometer to calibrate an ocular micrometer. Errors can be minimized if the magnification is sufficient that the image of the particle is at least 10 ocular divisions. Each objective must be calibrated separately. To calibrate the ocular scale, the stage micrometer scale and the ocular scale should be aligned. In this way, a precise determination of the distance between ocular stage divisions can be made. Several different magnifications may be necessary to characterize materials having a wide particle size distribution.

PHOTOGRAPHIC CHARACTERIZATION

If particle size is to be determined by photographic methods, take care to ensure that the object is sharply focused at the plane of the photographic emulsion. Determine the actual magnification by photographing a calibrated stage micrometer, using photographic film of sufficient speed, resolving power, and contrast. Exposure and processing should be identical for photographs of both the test specimen and the determination of magnification. The apparent size of a photographic image is influenced by the exposure, development, and printing processes as well as by the resolving power of the microscope.

PREPARATION OF THE MOUNT

The mounting medium will vary according to the physical properties of the test specimen. Sufficient but not excessive contrast between the specimen and the mounting medium is required to ensure adequate detail of the specimen edge. The particles should rest in one plane and be adequately dispersed to distinguish individual particles of interest. Furthermore, the particles must be representative of the distribution of sizes in the material and must not be altered during preparation of the mount. Care should be taken to ensure that this important requirement is met. Selection of the mounting medium must include a consideration of the analyte solubility.

CRYSTALLINITY CHARACTERIZATION

The crystallinity of a material may be characterized to determine compliance with the crystallinity requirement where stated in the individual monograph of a drug substance. Unless otherwise specified in the individual monograph, mount a few particles of the specimen in mineral oil on a clean glass slide. Examine the mixture using a polarizing microscope: the particles show birefringence (interference colors) and extinction positions when the microscope stage is revolved.

LIMIT TEST OF PARTICLE SIZE BY MICROSCOPY

Weigh a suitable quantity of the powder to be examined (for example, 10 to 100 mg), and suspend it in 10 mL of a suitable medium in which the powder does not dissolve, adding, if necessary, a wetting agent. A homogeneous suspension of particles can be maintained by suspending the particles in a medium of similar or matching density and by providing adequate agitation. Introduce a portion of the homogeneous suspension into a suitable counting cell, and scan under a microscope an area corresponding to not less than 10 µg of the powder to be examined. Count all the particles having a maximum dimension greater than the prescribed size limit. The size limit and the permitted number of particles exceeding the limit are defined for each substance.

PARTICLE SIZE CHARACTERIZATION

The measurement of particle size varies in complexity depending on the shape of the particle, and the number of particles characterized must be sufficient to ensure an acceptable level of uncertainty in the measured parameters. Additional information on particle size measurement, sample size, and data analysis is available, for example, in ISO 9276. For spherical particles, size is defined by the diameter. For irregular particles, a variety of definitions of particle size exist. In general, for irregularly shaped particles, characterization of particle size must also include information on the type of diameter measured as well as information on particle shape. Several commonly used measurements of particle size are defined below (see *Figure 1*):

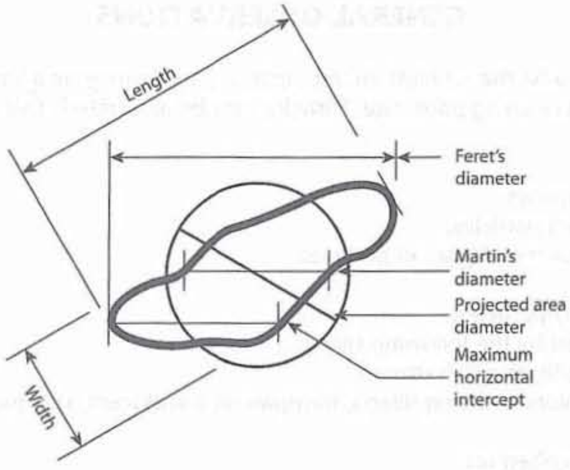

Figure 1. Commonly used measurements of particle size.

Feret's Diameter—The distance between imaginary parallel lines tangent to a randomly oriented particle and perpendicular to the ocular scale.
Martin's Diameter—The diameter of the particle at the point that divides a randomly oriented particle into two equal projected areas.
Projected Area Diameter—The diameter of a circle that has the same projected area as the particle.
Length—The longest dimension from edge to edge of a particle oriented parallel to the ocular scale.
Width—The longest dimension of the particle measured at right angles to the length.

PARTICLE SHAPE CHARACTERIZATION

For irregularly shaped particles, characterization of particle size must also include information on particle shape. The homogeneity of the powder should be checked using appropriate magnification. The following defines some commonly used descriptors of particle shape (see *Figure 2*):

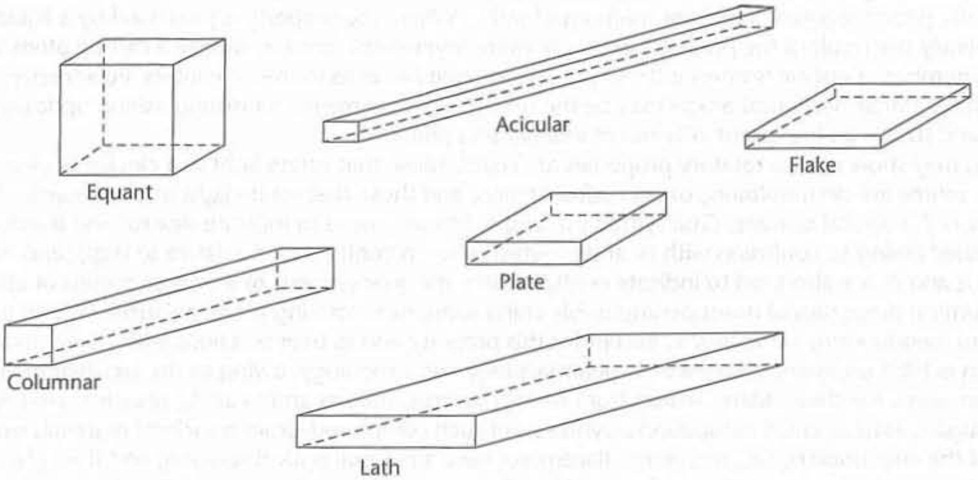

Figure 2. Commonly used descriptions of particle shape.

Acicular—Slender, needle-like particle of similar width and thickness.
Columnar—Long, thin particle with a width and thickness that are greater than those of an acicular particle.
Flake—Thin, flat particle of similar length and width.
Plate—Flat particles of similar length and width but with greater thickness than flakes.
Lath—Long, thin, and blade-like particle.
Equant—Particles of similar length, width, and thickness; both cubical and spherical particles are included.

General Chapters

GENERAL OBSERVATIONS

A particle is generally considered to be the smallest discrete unit. A particle may be a liquid or semisolid droplet; a single crystal or polycrystalline; amorphous or an agglomerate. Particles may be associated. This degree of association may be described by the following terms:

Lamellar—Stacked plates.
Aggregate—Mass of adhered particles.
Agglomerate—Fused or cemented particles.
Conglomerate—Mixture of two or more types of particles.
Spherulite—Radial cluster.
Drusy—Particle covered with tiny particles.

Particle condition may be described by the following terms:

Edges—Angular, rounded, smooth, sharp, fractured.
Optical—Color (using proper color-balancing filters), transparent, translucent, opaque.
Defects—Occlusions, inclusions.

Surface characteristics may be described as:

Cracked—Partial split, break, or fissure.
Smooth—Free of irregularities, roughness, or projections.
Porous—Having openings or passageways.
Rough—Bumpy, uneven, not smooth.
Pitted—Small indentations.

⟨781⟩ OPTICAL ROTATION

INTRODUCTION

Many pharmaceutical substances are optically active in the sense that they rotate an incident plane of polarized light so that the transmitted light emerges at a measurable angle to the plane of the incident light. This property is characteristic of some crystals and of many pharmaceutical liquids or solutions of solids. Where the property is possessed by a liquid or by a solute in solution, it is generally the result of the presence of one or more asymmetric centers, usually a carbon atom with four different substituents. The number of optical isomers is 2^n, where n is the number of asymmetric centers. Polarimetry, the measurement of optical rotation, of a pharmaceutical article may be the only convenient means for distinguishing optically active isomers from each other and thus is an important criterion of identity and purity.

Substances that may show optical rotatory properties are *chiral.* Those that rotate light in a clockwise direction as viewed towards the light source are *dextrorotatory*, or (+) *optical isomers*, and those that rotate light in a counterclockwise direction are called *levorotatory* or (–) optical isomers. (The symbols *d*- and *l*-, formerly used to indicate dextro- and levorotatory isomers, are no longer sanctioned owing to confusion with D- and L-, which refer to configuration relative to D-glyceraldehyde. The symbols R and S and α and β are also used to indicate configuration, the arrangement of atoms or groups of atoms in space.)

The physicochemical properties of nonsuperimposable chiral substances rotating plane polarized light in opposite directions to the same extent, *enantiomers*, are identical, except for this property and in their reactions with other chiral substances. Enantiomers often exhibit profound differences in pharmacology and toxicology, owing to the fact that biological receptors and enzymes themselves are chiral. Many articles from natural sources, such as amino acids, proteins, alkaloids, antibiotics, glycosides, and sugars, exist as chiral compounds. Synthesis of such compounds from nonchiral materials usually results in equal amounts of the enantiomers, i.e., *racemates*. Racemates have a net null optical rotation, and their physical properties may differ from those of the component enantiomers. Use of stereoselective or stereospecific synthetic methods or separation of racemic mixtures can be used to obtain individual optical isomers.

Measurement of optical rotation is performed using a polarimeter.[1] The general equation used in polarimetry is:

$$[\alpha]_\lambda^t = \frac{100a}{lc}$$

where $[\alpha]$ is the specific rotation at wavelength λ, t is the temperature, a is the observed rotation in degrees (°), l is the pathlength in decimeters, and c is the concentration of the analyte in g per 100 mL. Thus, $[\alpha]$ is 100 times the measured value, in degrees (°), for a solution containing 1 g in 100 mL, measured in a cell having a pathlength of 1.0 dm under defined condi-

[1] Suitable calibrators are available from the Office of Standard Reference Materials, National Institute of Standards and Technology (NIST), Gaithersburg, MD 20899, as current lots of Standard Reference Materials, Dextrose and Sucrose. Alternatively, calibration may be checked using a Polarization Reference Standard, which consists of a plate of quartz mounted in a holder perpendicular to the light path. These standards are available, traceable to NIST, by contacting Rudolph Research Analytical, located at 55 Newburgh Road, Hackettstown, NJ 07840, USA.

tions of incident wavelength of light and temperature. For some Pharmacopeial articles, especially liquids such as essential oils, the optical rotation requirement is expressed in terms of the observed rotation, *α*, measured under conditions defined in the monograph.

Historically, polarimetry was performed using an instrument where the extent of optical rotation is estimated by visual matching of the intensity of split fields. For this reason, the D-line of the sodium lamp at the visible wavelength of 589 nm was most often employed.[2] Specific rotation determined at the D-line is expressed by the symbol:

$$[\alpha]_D^{25} \text{ or } [\alpha]_D^{20}$$

and much of the data available are expressed in this form. Use of lower wavelengths, such as those available with the mercury lamp lines isolated by means of filters of maximum transmittance at approximately 546, 436, 405, 365, and 325 nm in a photoelectric polarimeter, has been found to provide advantages in sensitivity with a consequent reduction in the concentration of the test compound. In general, the observed optical rotation at 436 nm is about double and at 365 nm about three times that at 589 nm.[2] Reduction in the concentration of the solute required for measurement may sometimes be accomplished by conversion of the substance under test to one that has a significantly higher optical rotation. Optical rotation is also affected by the solvent used for the measurement, and this is always specified.

It is now common practice to use other light sources, such as xenon or tungsten halogen, with appropriate filters, because these may offer advantages of cost, long life, and broad wavelength emission range, over traditional light sources.

PROCEDURES

Specific Rotation

The reference *Specific Rotation* ⟨781S⟩ in a monograph signifies that specific rotation is to be calculated from observed optical rotations in the *Test solution* or *Sample solution* obtained as directed therein. Unless otherwise directed, measurements of optical rotation are made in a 1.0-dm tube at 589 nm at 25° C.[2] Where a photoelectric polarimeter is used, a single measurement, corrected for the solvent blank, is made. Where a visual polarimeter is employed, the average of no fewer than five determinations, corrected for the reading of the same tube with a solvent blank, is used. Temperature, which applies to the solution or the liquid under test, should be maintained within 0.5° of the stated value. Use the same cell for sample and blank. Maintain the same angular orientation of the cell in each reading. Place the cell so that the light passes through it in the same direction each time. Unless otherwise specified, specific rotation is calculated on the dried basis where *Loss on Drying* is specified in the monograph, or on the anhydrous basis where *Water Determination* is specified.

Optical rotation of solutions should be determined within 30 min of preparation. In the case of substances known to undergo racemization or mutarotation, care should be taken to standardize the time between adding the solute to the solvent and introduction of the solution into the polarimeter tube.

Angular Rotation

The reference *Angular Rotation* ⟨781A⟩ in a monograph signifies, unless otherwise directed, that the optical rotation of the neat liquid is measured in a 1.0-dm tube at 589 nm at 25° C, corrected for the reading of the dry empty tube.[2]

⟨782⟩ VIBRATIONAL CIRCULAR DICHROISM SPECTROSCOPY

1. INTRODUCTION
2. QUALIFICATION OF VCD SPECTROMETERS
    2.1 Installation Qualification
    2.2 Operational Qualification
    2.3 Performance Qualification
3. PROCEDURE
    3.1 Sample
    3.2 Standard
    3.3 Analysis

[2] All references of wavelengths are in vacuum. The sodium D-line is 589.44 in vacuum and 589.3 in air.

General Chapters

4. VALIDATION AND VERIFICATION
4.1 Validation
4.2 Precision
4.3 Verification

1. INTRODUCTION

Vibrational circular dichroism (VCD) is a form of chiroptical spectroscopy for which chiral molecules have non-zero spectra with intensities that are identical for mirror-image pairs (enantiomers) of chiral molecules but with signs that are opposite with respect to zero intensity. For a chiral molecular substance, two important properties are 1) absolute configuration (AC), which indicates which of two mirror-image forms of the molecule is present; and 2) enantiomeric excess (EE, also called enantiomeric purity), the fractional excess of one enantiomer of a chiral molecule over its mirror-image enantiomer. The principal chapter in *USP–NF* that addresses molecular chirality is *Optical Rotation* ⟨781⟩. Optical rotation (OR) and electronic circular dichroism (ECD) are the traditional forms of chiroptical spectroscopy, whereas VCD is a newer form of chiroptical spectroscopy that contains more molecular structure information and recently has been adopted more broadly for use in the pharmaceutical industry.

In this chapter, the required methodology for the use of VCD is described in terms of instrument qualification; sign and intensity calibration; procedures, validation, and verification of VCD measurement; calculation; and statistical analysis as needed for the determination of AC and EE of chiral pharmaceutical products. VCD is the extension of ECD from the region of electronic transitions in the UV and visible regions of the spectrum to vibrational transitions in the infrared (IR) region.

VCD is defined as:

$$\Delta A = A_L - A_R$$

ΔA = difference in the IR absorbance
A_L = sample absorbance for left circularly polarized (LCP) radiation
A_R = sample absorbance for right circularly polarized (RCP) radiation

Unpolarized IR intensity is defined as the average of LCP and RCP intensities:

$$A = (A_L + A_R)/2$$

A = IR absorbance
A_L = sample absorbance for left circularly polarized (LCP) radiation
A_R = sample absorbance for right circularly polarized (RCP) radiation

The IR intensities of enantiomers are identical, whereas enantiomers have equal and opposite-signed VCD intensities.

For discussion of the theory and principles of VCD measurements, as well as a more detailed explanation of the application of VCD to problems of pharmaceutical interest, see *Vibrational Circular Dichroism Spectroscopy—Theory and Practice* ⟨1782⟩.

2. QUALIFICATION OF VCD SPECTROMETERS

This section on qualification is divided into three subsections: *2.1 Installation Qualification* (IQ), *2.2 Operational Qualification* (OQ), and *2.3 Performance Qualification* (PQ) of a Fourier transform (FT)-VCD instrument. Although a VCD instrument can be based on a scanning dispersive spectrometer, no such VCD spectrometers are commercially available, and hence they will not be considered. Additional details on the qualification of instruments can be found in *Analytical Instrument Qualification* ⟨1058⟩.

2.1 Installation Qualification

The IQ requirements provide evidence that the hardware and software are properly installed in the desired location. An FT-VCD instrument is a sensitive, circular-polarization-difference, FT-infrared (FT-IR) spectrometer. Its installation requires a stable bench-top surface, access to dry air or nitrogen for purging of water vapor, and standard electrical outlets. Evidence for IQ involves ensuring that the IR interferometer is scanning, that its photoelastic modulator(s) [PEM(s)] is operating, and that the electronics hardware is interacting with both the FT-IR main bench and the PEM. The final evidence for IQ is that the software display for acquisition of a VCD spectrum is ready for operator use.

2.2 Operational Qualification

In OQ, an instrument's performance is characterized using a qualification standard of known spectral properties to verify that the system operates within target specifications. The purpose of OQ is to demonstrate that instrument performance is suitable. OQ is a check of the key operational parameters and should be performed after installation and after repairs and/or maintenance.

The OQ tests described in the following sections are typical examples only. Other tests and samples can be used to establish specifications for OQ. Instrument vendors often have samples and test parameters available as part of the IQ/OQ package. The

acceptance criteria provided in this section are applicable for general use, whereas specifications for particular instruments and applications may vary, depending on analytical methods used and desired accuracy of the final result.

CHARACTERIZING INSTRUMENT PERFORMANCE

FT-VCD spectrometers measure simultaneously the VCD spectrum and the parent IR spectrum. The VCD spectrum is obtained from a VCD interferogram arising from the combined high-frequency PEM polarization modulation and the Fourier frequencies, whereas the parent IR spectrum arises from the conventional FT-IR interferogram based only on the instrument's Fourier frequencies. Part of the instrument performance is from the underlying FT-IR operation, and the remaining part of the instrument performance is from those components that are uniquely associated with the FT-VCD operation. The combined FT-IR and FT-VCD criteria are wavenumber accuracy and absorbance linearity, whereas those uniquely associated with the VCD operation are VCD sign and intensity calibration, empty-beam baseline accuracy, sample-associated baseline deviations and artifact levels, baseline stability and spectral reproducibility, and signal-to-noise ratio. As described in ⟨1782⟩, two standard samples are commonly used for specifying VCD performance. For sign and intensity calibration, neat α-pinene is used as a validation standard, whereas for baseline characteristics, a solution of camphor in carbon tetrachloride (CCl_4) is used as the qualification standard. VCD spectra presented in ⟨1782⟩ serve as examples of performance characteristics of typical spectra for VCD sign and intensity calibration, baseline stability, and signal-to-noise ratio.

WAVENUMBER ACCURACY

The wavenumber accuracy of FT-VCD instruments is based on the corresponding wavenumber accuracy of the parent FT-IR operation. This accuracy is determined by fringe counting of the visible laser co-operating with the FT-IR interferometer. The frequency calibration is accurate to within the spectral resolution of the instrument and requires no calibration standard. The accuracy of wavenumber frequency should be checked by measuring the IR spectrum of a 35-µm-thick polystyrene film, as described in the *USP–NF* chapter on mid-IR spectroscopy, *Mid-Infrared Spectroscopy* ⟨854⟩, with additional information in *Mid-Infrared Spectroscopy—Theory and Practice* ⟨1854⟩. Because the FT-VCD and FT-IR spectra are simultaneously measured by the action of the same interferometer, the wavenumber accuracy of the VCD spectrum is the same as that of the FT-IR operation of the instrument.

LINEARITY AND STABILITY

Commercial FT-IR instruments have excellent linearity, provided that the infrared detector remains unsaturated. FT-IR spectra are particularly prone to detector saturation, because the intensity of the entire spectrum is present simultaneously at the detector. Detector saturation can be avoided by the use of a long-wavelength pass filter or appropriate adjustment of the gain of the preamplifier to ensure that the maximum of the FT-IR interferogram lies within the range of preamplifier voltage capability. The hallmark of the onset of nonlinearity is distortion of the FT-IR interferogram that can lead to negative FT-IR absorbance values at the endpoint frequency of the spectral coverage, which is clearly incorrect for an absorbing sample. Aperture reduction, insertion of screens, or neutral density filters can be used to avoid detector saturation.

These same considerations apply to the linearity of FT-VCD measurements. The linearity of VCD is more sensitive to the onset of detector saturation than is the parent IR spectrum. VCD spectra are unstable and distorted when the parent FT-IR spectrum has any saturation, and in some cases linearity in the VCD is not restored until the FT-IR intensity is well below saturation. Saturation can be tested by varying the throughput of the instrument by changing the sample path length and making sure that all of the points across the spectrum are changed by the same factor, i.e., there are no relative shape changes in the spectrum. These relative shape changes should be less than the apparent noise level or, at most, 2% (1.00 ± 0.02), depending on the accuracy needed for the VCD measurements.

PHASE CORRECTION, SIGN, AND INTENSITY CALIBRATION

The raw VCD spectrum is measured as the ratio of the FT of the VCD interferogram to that of the FT of the IR interferogram. Both of these interferograms must be phase-corrected before performing the FT. The phase correction for the IR is straightforward, but the phase correction of the VCD interferogram requires transfer of a phase file from a VCD interferogram representing only positive intensities. Most commercial FT-VCD instruments provide such phase files for the measurement of VCD.

Next, the measured raw VCD spectrum must be calibrated such that VCD spectra with the correct signs and intensities are produced. The signs can be determined by measuring the qualification standard of (−)-camphor or (+)-camphor in carbon tetrachloride solution and comparing it to a previously published standard VCD spectrum of this molecule, such as that provided in ⟨1782⟩. Either all of the signs agree, in which case the sign is correctly set, or all of the signs are opposite, in which case the phase of the VCD synchronous detection (lock-in amplifier or numerical processing) must be changed by 180° to reverse the signs of all VCD bands, positive-to-negative and negative-to-positive.

Calibration of VCD intensities is performed by dividing the raw VCD by a calibration curve representing the magnitude of unit VCD intensity for the VCD spectrometer. The shape of the calibration curve follows a first-order Bessel function, which in

turn depends on the settings of the PEM generating LCP and RCP radiation. The maximum of the calibration curve corresponds to the maximum wavenumber value set on the PEM controller. The calibration curve for a given PEM setting can be obtained from the crossing points of curves generated by placing a multiple-wave plate followed by a polarizer in place of the sample and measuring the VCD spectrum in the usual manner. Commercial VCD instruments provide such curves, and the correct calibration curve must be used for each wavenumber setting of the PEM. For an example of a calibration curve for the PEM setting at 1200 cm^{-1}, see ⟨1782⟩.

After calibration of the intensities of the VCD instrument, a measurement of a 0.9 M solution of (+)-*R*-camphor in carbon tetrachloride measured in a 100-µm path-length cell should be approximately 2×10^{-4}. After baseline subtraction, described below and in ⟨1782⟩, this difference should be a positive peak ΔA value of $+1 \times 10^{-4}$ absorbance units at 1240 cm^{-1} and a negative ΔA peak value of -1×10^{-4} at 1040 cm^{-1}.

EMPTY BEAM BASELINE CHARACTERISTICS

To avoid significant levels of baseline deviations from the absorbance features of a sample, the empty beam baseline for a VCD instrument should be as close as possible to the true zero of the measurement. A minimum standard for FT-VCD spectrometers is to have empty beam baselines sufficiently close to zero so that deviations from true zero are <25% of the span of maximum positive-to-negative absorbance intensity of a 0.9 M solution of (+)-*R*-camphor in carbon tetrachloride, measured in a 100-µm path-length cell. This magnitude, noted above, is approximately 2×10^{-4} as determined from a positive peak value of $+1 \times 10^{-4}$ at 1240 cm^{-1} and a negative peak value of -1×10^{-4} at 1040 cm^{-1}. The value of 25% of this intensity range is approximately 5×10^{-5}. VCD empty beam baseline deviations (maximum to minimum), over the mid-IR range from 900 to 1800 cm^{-1}, should not exceed $\pm 5 \times 10^{-4}$ and should not deviate more than $+5 \times 10^{-4}$ or -5×10^{-4} from the zero of VCD intensity over this wavenumber range.

SAMPLE BASELINES AND ABSORPTION ARTIFACTS

An important test for a VCD measurement is the VCD spectrum of a racemic sample relative to that of the baseline of the empty instrument or the VCD spectrum of a nonchiral solvent, such as carbon tetrachloride. Because of possible baseline changes due to the sample cell, it is preferable to compare the VCD of the solvent with that of a solution of the racemic sample of the chiral molecule in the same solvent. Both should have zero VCD, but the racemic solution may have baseline artifacts (offsets) at the location of the absorption bands. Absorption bands change the index of refraction of the sample and can cause baseline deviations that are particular to the sample molecule. If such absorption artifacts are present, the only way to recover the artifact-free VCD spectrum is by subtraction of the racemic mixture (equal quantities of both enantiomers) from that of the measured VCD spectrum. Alternatively, subtraction of the VCD spectrum of the opposite enantiomer is divided by 2, because the VCD intensity doubles if the VCD spectrum of one enantiomer is subtracted from that of the other. The qualification standard used for measuring the VCD baseline with an absorbing sample present is racemic camphor in carbon tetrachloride solution versus the VCD spectrum of neat carbon tetrachloride in the range 900–1800 cm^{-1}, where there are only absorption bands from camphor and none for carbon tetrachloride. Both samples should have zero VCD and a baseline that is featureless with respect to the camphor absorption bands.

SIGNAL-TO-NOISE RATIO

The signal-to-noise ratio of a VCD measurement can be determined from the noise curve generated by subtracting one-half of the FT scans of a measurement from the other half, thus cancelling the signal and exposing the noise level. The noise level varies across the spectrum and increases when the light level reaching the detector decreases, either due to the overall throughput of the instrument in a particular spectral region or directly within the absorption bands of the sample. The level of noise in the noise curve can be reduced by increasing the measurement time of the spectrum. The noise level is inversely proportional to the square root of the measurement time. This is illustrated with a particular example in *Figures 9* and *10* of ⟨1782⟩.

Smoothing a VCD spectrum without increasing the measurement time will reduce the size of the peak-to-peak noise excursions but will not reduce the overall accuracy of a VCD measurement, because the VCD baseline, and hence the VCD intensity relative to the zero baseline, will undergo the same level of variations, although the VCD spectrum appears to have less noise after smoothing. To know the true level of the noise and hence the uncertainty level of a VCD spectrum, all smoothing functions, if any, should be turned off. Noise can legitimately be reduced by lowering the spectral resolution. In evaluating the noise level of the VCD measurement, the resolution and interferogram apodization must be specified.

2.3 Performance Qualification

PQ determines if the instrument is capable of meeting the user's requirements for all the parameters that may affect the quality of the measurement. Depending on typical use, the specifications for PQ may be different from the manufacturer's OQ specifications; however, for general use across a range of typical chiral molecules and sampling conditions, the specifications

General Chapters

for OQ will be the same as those needed for PQ. For validated methods, specific PQ tests, also known as system suitability tests, can be used in lieu of PQ requirements.

Specific procedures, acceptance criteria, and time intervals for characterizing performance depend on the instrument and intended application. Demonstrating stable instrument performance over extended periods of time provides some assurance that reliable measurements can be taken from test sample spectra.

Particular long-term stability tests that can be carried out for PQ evaluation beyond those carried out for IQ or OQ are as follows. It is recommended that a 60-min measurement of a 0.9 M solution of (+)-*R*-camphor in carbon tetrachloride, measured in a 100-µm path-length cell, be performed between different applications of the VCD spectrometer to ensure that the signs, intensities, and signal-to-noise ratio of the VCD spectrum established as a qualification test during OQ are maintained. This is particularly important if there has been an interruption in power or a long hiatus between measurements.

If averaging over long periods of time, such as overnight, it is important that the stability of both the VCD baseline and the sample VCD spectrum are stable over time and that the signal-to-noise ratio improves as expected with the square-root of measurement time or number of interferometer scans, as illustrated by the example in ⟨1782⟩. In general, stability should be maintained to within the noise level of the VCD measurement. Because VCD intensities are generally three to four orders of magnitude smaller than the parent IR intensity, the instrument stability for the FT-IR performance of the instrument is typically larger over time relative to the noise level of the VCD spectrum.

3. PROCEDURE

The measurement of the VCD spectrum of a sample follows the same general rules as the measurement of an IR spectrum as for mid-IR spectroscopy described in ⟨854⟩.

3.1 Sample

A VCD spectrum can be measured in all types of standard IR transmission cells, either for neat liquids or solutions. For solids, such as in potassium bromide (KBr) pellets, mulls, or thin films, it is recommended that additional steps be taken to ensure that artifacts arising from sample linear birefringence are not present as described in ⟨1782⟩ for advanced instrumentation methods, such as dual PEM modulation or rotating sample cells.

Because of the importance of noise control in a VCD measurement, the absorbance of a sample should not exceed $A = 1.0$ in the region of measurement interest. For absorbance >1.0, insufficient radiation is present at the detector, and noise dominates the VCD spectrum. The optimum level of absorbance relative to the sample reference (empty beam or solvent) is approximately 0.4. One should adjust the path length and/or concentration of the sample such that the average absorbance is approximately 0.4–0.5 over the region of interest, with limits of 0.1–1.0. For samples with a wide range of absorbance, more than one measurement can be carried out with differing average absorbance values to ensure that a VCD spectrum of adequate quality is obtained over the entire range of interest.

To perform a solution-state VCD measurement, first find a solvent that dissolves an adequate amount of solute to achieve a desired absorbance level. Solvents without CH bonds are the most desirable for this purpose; these include carbon tetrachloride, deuterated chloroform ($CDCl_3$), or deuterated dimethyl sulfoxide (DMSO-d_6). The IR cell should have windows that are transparent in the mid-IR region, with generally low levels of linear birefringence. Commonly used materials are barium fluoride (BaF_2), which has good transmission to 800 cm^{-1}, and calcium fluoride (CaF_2), which is used if coverage to only 1100–1200 cm^{-1} is needed, such as for aqueous solutions.

3.2 Standard

To ensure that the analyst can use an IR cell for a transmission measurement of a solution, it is recommended that a standard OQ measurement of a 0.9 M solution of (+)-*R*-camphor in carbon tetrachloride using a 100-µm barium fluoride cell be performed. For different choices of concentration or path length, one can use the linear dependence of these quantities on the measured ΔA to ensure that an accurate measurement with the correct signs and intensities has been achieved.

3.3 Analysis

VCD spectra, once measured, can be analyzed in a variety of ways, depending on the intended application. The principal application of VCD in the pharmaceutical industry is the determination of absolute configuration (AC) in conjunction with a VCD calculation using a quantum chemistry computation software package. A second application is the determination of EE of a sample, either for the purpose of determining the EE of a sample or for monitoring the EE of one or more species during the course of the chemical reaction involving chiral species. Achievement of the highest level of accuracy in the determination of EE requires the use of a chemometric software package that uses the entire range of the VCD spectrum, as opposed to a single band or wavenumber frequency. Other applications of VCD are its use with a standard database of VCD and IR spectra to simultaneously ensure the correct identity, AC, and EE of a chiral substance, for example as a chiral raw material identification.

VCD can also be used to specify the AC and EE of a drug product in the presence of either achiral or chiral excipients, such as carbohydrates. These applications are described in more detail in ⟨1782⟩.

4. VALIDATION AND VERIFICATION

4.1 Validation

The objective of VCD procedure validation, as with the validation of any analytical process, is to demonstrate that the measurement is suitable for its intended purpose. The application of VCD spectroscopy is somewhat different from that of conventional vibrational spectroscopic techniques because it is not a primary technique. Rather, it is the polarization difference spectroscopy of the parent IR spectroscopy that has been used by itself for decades as a primary identification and quantitation technique as described for mid-IR spectroscopy in ⟨854⟩. The differential VCD spectrum supplements the parent IR spectrum with a new set of intensities at each position of an IR absorption band. The new set of intensities then reveals stereospecific properties of the sample molecules that must be chiral to have a non-zero VCD spectrum. There are two primary properties of a sample of a chiral molecule: one is the AC of the dominant chiral species (dominant enantiomer), and the second property is the EE of the dominant enantiomer over its lesser (mirror-image) enantiomer. In addition, the VCD spectrum carries additional information about the solution-state conformation, or conformational distribution, of the molecule that may be available in only lesser detail, if any, using the parent IR spectrum alone. Applications that require validation for the use of VCD spectroscopy also exist for the combined use of the measurement of the VCD of a substance for which there exists a reference spectrum with known AC and EE. Any subsequent measurement of the VCD spectrum, together with the simultaneous measurement of its parent IR spectrum, confirms in one measurement the molecular identity of the sample as well as the AC and EE. Such applications are useful, for example, for chiral raw-material identification of AC and EE, for which there is currently no established methodology for a single measurement. VCD can also confirm, in a single measurement, the AC and EE of a final drug product, including the chirality (if any) of the excipients.

Before validation of VCD for AC determination, an overall instrument validation should be carried out by the measurement of the VCD spectrum of neat (−)-*S*-α-pinene or (+)-*R*-α-pinene using a 75-µm cell. The calibrated, baseline-corrected VCD spectrum should yield a positive peak maximum of ΔA equal to approximately $+5 \times 10^{-4}$ absorbance units at 1220 cm^{-1} and a negative peak value of approximately -4×10^{-4} at 1130 cm^{-1}. The noise level should be comparable to that established for the instrument during the OQ phase of instrumental qualification described above. Because the VCD spectrum of α-pinene is relatively large, sufficient signal-to-noise ratio is available with a 20-min collection to verify that the instrument is operating with correct VCD intensities, signs, and noise levels for the applications of VCD described below.

Validation for AC determination by VCD can be achieved by the successful comparison of the measured VCD spectrum of the validation standard, neat (−)-*S*-α-pinene, to its quantum-chemistry-calculated VCD spectrum. Success is achieved by measuring the baseline-corrected VCD spectrum with sufficient signal-to-noise ratio that the signs, frequencies, and relative intensities of the major VCD bands can be compared clearly to the corresponding VCD signs, frequencies, and relative intensities of the calculated VCD spectrum. If the signs, frequencies, and relative intensities agree, then the AC of the measured sample of (−)-α-pinene is the same as that for the model of *S*-α-pinene that has been constructed for the calculation of this standard molecule. If the frequencies and relative VCD intensities are opposite after instrument sign calibration, then the AC of the sample is opposite (the mirror image) of the enantiomer used for the calculation. A successful comparison requires pretreatment of the VCD data for baseline subtraction and intensity calibration. It also requires a computational procedure that is known to be accurate in calculating VCD spectra. Finally, a program should be used to impartially assess the degree of agreement between measured and calculated VCD spectra such that one relies on more than an analyst's visual assessment of the agreement, or lack of agreement, between a measured spectrum and a calculated spectrum. An example of this procedure can be found in ⟨1782⟩ as well as in the references cited in ⟨1782⟩.

Validation of VCD spectroscopy for the determination of EE is achieved by plotting the EE predicted by VCD versus the EE for a sample of neat (−)-*S*-α-pinene for a series of samples with differing values of %EE over the range from 100% EE to 0% EE. The EE predicted by VCD involves measurement of the VCD spectra at a chosen spectral resolution and time of collection to achieve a desired level of signal-to-noise ratio, followed by pretreatment of the measured VCD spectra for baseline subtraction. The prediction of EE could be based on a size of a single VCD band for the samples with differing VCD, normalized for constant IR intensity; but more generally and with better accuracy, the entire range of VCD bands across the spectrum is used for each spectrum by means of a chemometrics software package. Validation is accompanied by a measure of the %EE accuracy through a cross-correlation analysis, yielding a root mean square (RMS). An example of such a determination of %EE by VCD for neat (−)-*S*-α-pinene is provided, along with literature references, in ⟨1782⟩.

More generally, validation is required when a method is intended for use as an alternative to the official procedure for testing an official article. The objective is to demonstrate that the measurement of VCD is suitable for its intended purpose; for examples of various types of measurements, see *Validation of Compendial Procedures* ⟨1225⟩. For %EE determination, creation of a linear plot of actual versus VCD-predicted values of %EE establishes that the magnitude of IR-normalized VCD spectra, as evaluated with chemometrics, exhibits sufficient linearity, range, accuracy, specificity, precision, detection limit, quantitation limit, and robustness with respect to the detection of %EE.

Chapter ⟨1225⟩ provides definitions and general guidance on analytical procedures validation without indicating specific validation criteria for each characteristic. The intention of the following sections is to provide the user with specific validation cri-

teria that represent the minimum expectations for VCD technology. For each particular application, tighter criteria may be needed to demonstrate suitability for the intended use.

ACCURACY

Accuracy can be determined by the measurement of a VCD spectrum of the established validation standard of neat (–)-α-pinene or (+)-α-pinene, as presented, for example, in ⟨1782⟩, and verifying that the measured signs and intensities of the VCD spectrum agree with the standard VCD spectrum to within the noise level of the measurement. In particular, the VCD spectrum should yield a positive peak maximum of ΔA equal to approximately $+5 \times 10^{-4}$ absorbance units at 1220 cm^{-1} and a negative peak value of approximately -4×10^{-4} at 1130 cm^{-1}. This validation ensures that the VCD spectrometer is accurately calibrated and has the correct signs for the VCD bands.

4.2 Precision

REPEATABILITY

Validation criteria: Measurement of VCD spectra of the validation standard sample, neat (+)-α-pinene or (–)-α-pinene, in 20-min blocks with variations in the VCD spectra at or less than the noise level of each 20-min block that is approximately ΔA equal to or less than 1×10^{-5}

INTERMEDIATE PRECISION

The effect of random events on the analytical precision of the validation criteria of VCD measurement should be established. Typical variables include performing the analysis on different days, using different instrumentation, or having the method performed by two or more analysts. As a minimum, any combination of at least two of these factors totaling six experiments will provide an estimation of intermediate precision. (For example, this could be two analysts on each of 3 days, or two analysts on two sets of equipment on 2 days for each analyst–equipment combination.)
Validation criteria: The *Validation criteria* are the same as those for *Repeatability.*

SPECIFICITY

Specificity is not a required metric for the determination of AC. For the measurement of EE for more than one chiral species in a single set of measurements, the analytical procedure, including chemometric analysis, must be able to unequivocally assess the EE of chiral species in the presence of components that may be expected to be present, i.e., solvent and other nonchiral species.
Validation criteria: The *Validation criteria* are demonstrated by meeting the *Accuracy* requirement.

QUANTITATION LIMIT

For the determination of AC, there is no quantitation limit (QL). The QL for EE can be determined by carrying out a determination of quantitation of %EE for the VCD validation standard of neat α-pinene for a series of EE values, performing a chemometric analysis of VCD-predicted EE values and performing a determination of RMS error, as illustrated, for example, in ⟨1782⟩.
Validation criteria: The analytical procedure should be capable of determining the analyte precisely and accurately at a level equivalent to approximately 1% EE for neat α-pinene.

LINEARITY

A linear relationship between the analyte concentration and response should be demonstrated by preparing NLT 5 standard solutions at concentrations encompassing the anticipated concentration of the test solution. The standard curve should then be evaluated using appropriate statistical methods, such as a least-squares regression, for the area of peak height of a selected VCD band, or for the entire spectrum, using chemometric analysis such as partial least squares. For experiments that do not yield a linear relationship between analyte concentration and response, appropriate statistical methods must be applied to describe the analytical response.
Validation criteria: The *Validation criteria* find the correlation coefficient above 0.95 for a linear plot of actual EE versus VCD-predicted EE.

ROBUSTNESS

The reliability of an analytical measurement should be demonstrated by deliberate changes to experimental parameters, such as changes in spectral resolution, concentration, or path length for measurement of VCD.

4.3 Verification

U.S. Current Good Manufacturing Practices regulations [21 CFR 211.194(a)(2)] indicate that users of the analytical procedures, as described in *USP–NF*, are not required to validate these procedures if provided in a monograph. Instead, they must simply verify their suitability under actual conditions of use.

The objective of procedure verification is to demonstrate that the procedure, as prescribed in a specific monograph, can be executed by the analysts with suitable accuracy, specificity, and precision using the instruments, and sample solutions of chiral molecules available. If the verification of the compendial procedure by following the monograph is not successful, the procedure may not be suitable for use with the article under test (for additional information, see *Verification of Compendial Procedures* ⟨1226⟩). It may be necessary to develop and validate an alternative procedure as allowed in *General Notices, 6.30 Alternative and Harmonized Methods and Procedures.*

Verification of compendial methods should, at a minimum, include the execution of the validation parameters for specificity, accuracy, precision, and limit of quantitation, when appropriate, as indicated in *4.1 Validation.*

⟨785⟩ OSMOLALITY AND OSMOLARITY

INTRODUCTION

Osmotic pressure plays a critical role in all biological processes that involve diffusion of solutes or transfer of fluids through membranes. Osmosis occurs when solvent but not solute molecules cross a semipermeable membrane from regions of lower to higher concentrations to produce equilibrium. The knowledge of osmotic pressures is important for practitioners in determining whether a parenteral solution is hypo-osmotic, iso-osmotic, or hyperosmotic. A quantitative measure of osmotic pressure facilitates the dilution required to render a solution iso-osmotic relative to whole blood.

OSMOTIC PRESSURE

The osmotic pressure of a solution depends on the number of particles in solution, and is therefore referred to as a colligative property. A particle can be a molecule or an ion or an aggregated species (e.g., a dimer) that can exist discretely in solution. A solution exhibits ideal behavior when no interaction occurs between solutes and solvent, except where solvent molecules are bound to solutes by hydrogen bonding or coordinate covalency. For such a solution containing a nondissociating solute, the osmotic pressure (π) is directly proportional to its molality (number of moles of solute per kilogram of the solvent):

$$\pi = (\rho RT/1000)m,$$

where ρ is the density of the solvent at the temperature T (in the absolute scale); R is the universal gas constant; and m is the molality of the solution. For a real solution containing more than one solute, the osmotic pressure is given by the formula:

$$\pi = (\rho RT/1000)\Sigma \nu_i m_i \Phi_{m,i}$$

where ν_i is the number of particles formed by the dissociation of one molecule of the ith solute; $\nu_i = 1$ for nonionic (nondissociating) solutes; m_i is the molality of the ith solute; and $\Phi_{m,i}$ is the molal osmotic coefficient of the ith solute. The molal osmotic coefficient takes into account the deviation of a solution from ideal behavior. Its value depends upon the concentration of the solute(s) in solution, its chemical properties, and ionic characteristics. The value of the molal osmotic coefficient of a solute can be determined experimentally by measuring the freezing point depression at different molal concentrations. At concentrations of pharmaceutical interest, the value of the molal osmotic coefficient is less than one. The molal osmotic coefficient decreases with the increase in concentration of the solute *(Table 1).*

OSMOLALITY

The osmolality of a solution ξ_m is given by

$$\xi_m = \Sigma \nu_i m_i \Phi_{m,i}.$$

The osmolality of a real solution corresponds to the molality of an ideal solution containing nondissociating solutes and is expressed in osmoles or milliosmoles per kilogram of solvent (Osmol per kg or mOsmol per kg, respectively), a unit that is similar to the molality of the solution. Thus, osmolality is a measure of the osmotic pressure exerted by a real solution across a semipermeable membrane. Like osmotic pressure, other colligative properties of a solution, such as vapor pressure lowering, boiling point elevation, and freezing point depression, are also directly related to the osmolality of the solution. Indeed, the osmolality of a solution is typically determined most accurately and conveniently by measuring freezing point depression (ΔT_f):

$$\Delta T_f = k_f \xi_m$$

where k_f is the molal cryoscopic constant, which is a property of the solvent. For water, the value of k_f is 1.860° per Osmol. That is, 1 Osmol of a solute added to 1 kg of water lowers the freezing point by 1.860°.

OSMOLARITY

Osmolarity of a solution is a theoretical quantity expressed in osmoles per L (Osmol per L) of a solution and is widely used in clinical practice because it expresses osmoles as a function of volume. Osmolarity cannot be measured but is calculated theoretically from the experimentally measured value of osmolality.

Sometimes, osmolarity (ξ_c) is calculated theoretically from the molar concentrations:

$$\xi_c = \Sigma \nu_i c_i$$

where ν_i is as defined above, and c_i is the molar concentration of the ith solute in solution. For example, the osmolarity of a solution prepared by dissolving 1 g of vancomycin in 100 mL of 0.9% sodium chloride solution can be calculated as follows:

[3 × 10 g/L/1449.25(mol. wt. of vancomycin) + 2 × 9 g/L/58.44(mol. wt. of sodium chloride)] × 1000 = 329 mOsmol/L

The results suggest that the solution is slightly hyperosmotic because the osmolality of blood ranges between 285 and 310 mOsmol per kg. However, the solution is found to be hypo-osmotic and has an experimentally determined osmolality of 255 mOsmol per kg.[1] The example illustrates that osmolarity values calculated theoretically from the concentration of a solution should be interpreted cautiously and may not represent the osmotic properties of infusion solutions.

The discrepancy between theoretical (osmolarity) and experimental (osmolality) results is, in part, due to the fact that osmotic pressure is related to osmolality and not osmolarity. More significantly, the discrepancy between experimental results and the theoretical calculation is due to the fact that the osmotic pressure of a real solution is less than that of an ideal solution because of interactions between solute molecules or between solute and solvent molecules in a solution. Such interactions reduce the pressure exerted by solute molecules on a semipermeable membrane, reducing experimental values of osmolality compared to theoretical values. This difference is related to the molal osmotic coefficient ($\Phi_{m,i}$). The example also illustrates the importance of determining the osmolality of a solution experimentally, rather than calculating the value theoretically.

MEASUREMENT OF OSMOLALITY

The osmolality of a solution is commonly determined by the measurement of the freezing point depression of the solution.

Apparatus

The apparatus, an osmometer for freezing point depression measurement, consists of the following: a means of cooling the container used for the measurement; a resistor sensitive to temperature (thermistor), with an appropriate current- or potential-difference measurement device that may be graduated in temperature change or in osmolality; and a means of mixing the sample.

Osmometers that measure the vapor pressures of solutions are less frequently employed. They require a smaller volume of specimen (generally about 5 µL), but the accuracy and precision of the resulting osmolality determination are comparable to those obtained by the use of osmometers that depend upon the observed freezing points of solutions.

Standard Solutions

Prepare *Standard Solutions* as specified in *Table 1*, as necessary.[2]

Table 1. Standard Solutions for Osmometer Calibration*

Standard Solutions (Weight in g of sodium chloride per kg of water)	Osmolality (mOsmol/kg) (ξ_m)	Molal Osmotic Coefficient ($\Phi_{m, NaCl}$)	Freezing Point Depression (°) ΔT_f
3.087	100	0.9463	0.186
6.260	200	0.9337	0.372
9.463	300	0.9264	0.558
12.684	400	0.9215	0.744

* Adapted from the *European Pharmacopoeia*, 4th Edition, 2002, p. 50.

[1] Kastango, E.S. and Hadaway, L. *International Journal of Pharmaceutical Compounding 5*, (2001) 465-469.

[2] Commercially available solutions for osmometer calibration, with osmolalities equal to or different from those listed in *Table 1* and standardized by methods traceable to NIST, may be used.

Table 1. Standard Solutions for Osmometer Calibration* *(Continued)*

Standard Solutions (Weight in g of sodium chloride per kg of water)	Osmolality (mOsmol/kg) (ξ_m)	Molal Osmotic Coefficient ($\Phi_{m,\ NaCl}$)	Freezing Point Depression (°) ΔT_f
15.916	500	0.9180	0.930
19.147	600	0.9157	1.116
22.380	700	0.9140	1.302

* Adapted from the *European Pharmacopoeia*, 4th Edition, 2002, p. 50.

Test Solution

For a solid for injection, constitute with the appropriate diluent as specified in the instructions on the labeling. For solutions, use the sample as is. [NOTE—A solution can be diluted to bring it within the range of measurement of the osmometer, if necessary, but the results must be expressed as that of the diluted solution and must NOT be multiplied by a dilution factor to calculate the osmolality of the original solution, unless otherwise indicated in the monograph. The molal osmotic coefficient is a function of concentration. Therefore, it changes with dilution.]

Procedure

First, calibrate the instrument by the manufacturer's instructions. Confirm the instrument calibration with at least one solution from *Table 1* such that the osmolality of the *Standard Solution* lies within 50 mOsmol/kg of the expected value of the *Test Solution* or the center of the expected range of osmolality of the *Test Solution*. The instrument reading should be within ±4 mOsmol per kg from the *Standard Solution*. Introduce an appropriate volume of each *Standard Solution* into the measurement cell as in the manufacturer's instructions, and start the cooling system. Usually, the mixing device is programmed to operate at a temperature below the lowest temperature expected from the freezing point depression. The apparatus indicates when the equilibrium is attained. If necessary, calibrate the osmometer, using an appropriate adjustment device such that the reading corresponds to either the osmolality or freezing point depression value of the *Standard Solution* shown in *Table 1*. [NOTE—If the instrument reading indicates the freezing point depression, the osmolality can be derived by using the appropriate formula under *Osmolality*.] Repeat the procedure with each *Test Solution*. Read the osmolality of the *Test Solution* directly, or calculate it from the measured freezing point depression.

Assuming that the value of the osmotic coefficient is essentially the same whether the concentration is expressed in molality or molarity, the experimentally determined osmolality of a solution can be converted to osmolarity in the same manner in which the concentration of a solution is converted from molality to molarity. Unless a solution is very concentrated, the osmolarity of a solution (ξ_c) can be calculated from its experimentally determined osmolality (ξ_m):

$$\xi_c = 1000\xi_m / (1000 / \rho + \Sigma w_i v_i)$$

where w_i is the weight in g; and v_i is the partial specific volume, in mL per g, of the ith solute. The partial specific volume of a solute is the change in volume of a solution when an additional 1 g of solute is dissolved in the solution. This volume can be determined by the measurement of densities of the solution before and after the addition of the solute. The partial specific volumes of salts are generally very small, around 0.1 mL per g. However, those of other solutes are generally higher. For example, the partial specific volumes of amino acids are in the range of 0.6–0.9 mL per g. It can be shown from the above equation correlating osmolarity with osmolality that,

$$\xi_c = \xi_m (\rho - c)$$

where ρ is the density of the solution, and c is the total solute concentration, both expressed in g per mL. Thus, alternatively, the osmolarity can also be calculated from experimentally determined osmolality from the measurement of density of the solution by a suitable method and the total weight of the solute, after correction for water content, dissolved per mL of the solution.

⟨786⟩ PARTICLE SIZE DISTRIBUTION ESTIMATION BY ANALYTICAL SIEVING

Sieving is one of the oldest methods of classifying powders and granules by particle size distribution. When using a woven sieve cloth, the sieving will essentially sort the particles by their intermediate size dimension (i.e., breadth or width). Mechanical sieving is most suitable where the majority of the particles are larger than about 75 µm. For smaller particles, the light weight provides insufficient force during sieving to overcome the surface forces of cohesion and adhesion that cause the parti-

cles to stick to each other and to the sieve, and thus cause particles that would be expected to pass through the sieve to be retained. For such materials, other means of agitation such as air-jet sieving or sonic sifting may be more appropriate. Nevertheless, sieving can sometimes be used for some powders or granules having median particle sizes smaller than 75 µm where the method can be validated. In pharmaceutical terms, sieving is usually the method of choice for classification of the coarser grades of single powders or granules. It is a particularly attractive method in that powders and granules are classified only on the basis of particle size, and in most cases the analysis can be carried out in the dry state.

Among the limitations of the sieving method are the need for an appreciable amount of sample (normally at least 25 g, depending on the density of the powder or granule, and the diameter of test sieves) and difficulty in sieving oily or other cohesive powders or granules that tend to clog the sieve openings. The method is essentially a two-dimensional estimate of size because passage through the sieve aperture is frequently more dependent on maximum width and thickness than on length.

This method is intended for estimation of the total particle size distribution of a single material. It is not intended for determination of the proportion of particles passing or retained on one or two sieves.

Estimate the particle size distribution as described under *Dry Sieving Method,* unless otherwise specified in the individual monograph. Where difficulty is experienced in reaching the endpoint (i.e., material does not readily pass through the sieves) or when it is necessary to use the finer end of the sieving range (below 75 µm), serious consideration should be given to the use of an alternative particle-sizing method.

Sieving should be carried out under conditions that do not cause the test sample to gain or lose moisture. The relative humidity of the environment in which the sieving is carried out should be controlled to prevent moisture uptake or loss by the sample. In the absence of evidence to the contrary, analytical test sieving is normally carried out at ambient humidity. Any special conditions that apply to a particular material should be detailed in the individual monograph.

PRINCIPLES OF ANALYTICAL SIEVING

Analytical test sieves are constructed from a woven-wire mesh, which is of simple weave that is assumed to give nearly square apertures and is sealed into the base of an open cylindrical container. The basic analytical method involves stacking the sieves on top of one another in ascending degrees of coarseness, and then placing the test powder on the top sieve.

The nest of sieves is subjected to a standardized period of agitation, and then the weight of material retained on each sieve is accurately determined. The test gives the weight percentage of powder in each sieve size range.

This sieving process for estimating the particle size distribution of a single pharmaceutical powder is generally intended for use where at least 80% of the particles are larger than 75 µm. The size parameter involved in determining particle size distribution by analytical sieving is the length of the side of the minimum square aperture through which the particle will pass.

TEST SIEVES

Test sieves suitable for pharmacopeial tests conform to the most current edition of International Organization for Standardization Specification ISO 3310-1: Test Sieves—Technical Requirements and Testing (see *Table 1*). Unless otherwise specified in the monograph, use those ISO sieves listed as principal sizes in *Table 1*. Unless otherwise specified in the monograph, use those ISO sieves listed in *Table 1* as recommended in the particular region.

Table 1. Sizes of Standard Sieve Series in Range of Interest

ISO Nominal Aperture			US Sieve No.	Recommended USP Sieves (microns)	European Sieve No.	Japan Sieve No.
Principal Sizes	Supplementary Sizes					
R 20/3	R 20	R 40/3				
11.20 mm	11.20 mm	11.20 mm			11200	
	10.00 mm					
		9.50 mm				
	9.00 mm					
8.00 mm	8.00 mm	8.00 mm				
	7.10 mm					
		6.70 mm				
	6.30 mm					
5.60 mm	5.60 mm	5.60 mm			5600	3.5
	5.00 mm					
		4.75 mm				4
	4.50 mm					
4.00 mm	4.00 mm	4.00 mm	5	4000	4000	4.7
	3.55 mm					
		3.35 mm	6			5.5
	3.15 mm					

Table 1. Sizes of Standard Sieve Series in Range of Interest *(Continued)*

ISO Nominal Aperture						
Principal Sizes	**Supplementary Sizes**					
R 20/3	**R 20**	**R 40/3**	**US Sieve No.**	**Recommended USP Sieves (microns)**	**European Sieve No.**	**Japan Sieve No.**
2.80 mm	2.80 mm	2.80 mm	7	2800	2800	6.5
	2.50 mm					
		2.36 mm	8			7.5
	2.24 mm					
2.00 mm	2.00 mm	2.00 mm	10	2000	2000	8.6
	1.80 mm					
		1.70 mm	12			10
	1.60 mm					
1.40 mm	1.40 mm	1.40 mm	14	1400	1400	12
	1.25 mm					
		1.18 mm	16			14
	1.12 mm					
1.00 mm	1.00 mm	1.00 mm	18	1000	1000	16
	900 µm					
		850 µm	20			18
	800 µm					
710 µm	710 µm	710 µm	25	710	710	22
	630 µm					
		600 µm	30			26
	560 µm					
500 µm	500 µm	500 µm	35	500	500	30
	450 µm					
		425 µm	40			36
	400 µm					
355 µm	355 µm	355 µm	45	355	355	42
	315 µm					
		300 µm	50			50
	280 µm					
250 µm	250 µm	250 µm	60	250	250	60
	224 µm					
		212 µm	70			70
	200 µm					
180 µm	180 µm	180 µm	80	180	180	83
	160 µm					
		150 µm	100			100
	140 µm					
125 µm	125 µm	125 µm	120	125	125	119
	112 µm					
		106 µm	140			140
	100 µm					
90 µm	90 µm	90 µm	170	90	90	166
	80 µm					
		75 µm	200			200
	71 µm					
63 µm	63 µm	63 µm	230	63	63	235
	56 µm					
		53 µm	270			282
	50 µm					
45 µm	45 µm	45 µm	325	45	45	330
	40 µm					

Table 1. Sizes of Standard Sieve Series in Range of Interest *(Continued)*

ISO Nominal Aperture						
Principal Sizes	**Supplementary Sizes**		**US Sieve No.**	**Recommended USP Sieves (microns)**	**European Sieve No.**	**Japan Sieve No.**
R 20/3	**R 20**	**R 40/3**				
		38 µm			38	391

Sieves are selected to cover the entire range of particle sizes present in the test specimen. A nest of sieves having a $\sqrt{2}$ progression of the area of the sieve openings is recommended. The nest of sieves is assembled with the coarsest screen at the top and the finest at the bottom. Use micrometers or millimeters in denoting test sieve openings. [NOTE—Mesh numbers are provided in the table for conversion purposes only.] Test sieves are made from stainless steel or, less preferably, from brass or other suitable nonreactive wire.

Calibration and recalibration of test sieves is in accordance with the most current edition of ISO 3310-1. Sieves should be carefully examined for gross distortions and fractures, especially at their screen frame joints, before use. Sieves may be calibrated optically to estimate the average opening size, and opening variability, of the sieve mesh. Alternatively, for the evaluation of the effective opening of test sieves in the size range of 212 to 850 µm, Standard Glass Spheres are available. Unless otherwise specified in the individual monograph, perform the sieve analysis at controlled room temperature and at ambient relative humidity.

Cleaning Test Sieves

Ideally, test sieves should be cleaned using only an air jet or a liquid stream. If some apertures remain blocked by test particles, careful gentle brushing may be used as a last resort.

Test Specimen

If the test specimen weight is not given in the monograph for a particular material, use a test specimen having a weight between 25 and 100 g, depending on the bulk density of the material, and test sieves having a 200-mm diameter. For 76-mm sieves, the amount of material that can be accommodated is approximately 1/7th that which can be accommodated on a 200-mm sieve. Determine the most appropriate weight for a given material by test sieving accurately weighed specimens of different weights, such as 25, 50, and 100 g, for the same time period on a mechanical shaker. [NOTE—If the test results are similar for the 25-g and 50-g specimens, but the 100-g specimen shows a lower percentage through the finest sieve, the 100-g specimen size is too large.] Where only a specimen of 10 to 25 g is available, smaller diameter test sieves conforming to the same mesh specifications may be substituted, but the endpoint must be redetermined. The use of test samples having a smaller mass (e.g., down to 5 g) may be needed. For materials with low apparent particle density, or for materials mainly comprising particles with a highly isodiametrical shape, specimen weights below 5 g for a 200-mm screen may be necessary to avoid excessive blocking of the sieve. During validation of a particular sieve analysis method, it is expected that the problem of sieve blocking will have been addressed.

If the test material is prone to picking up or losing significant amounts of water with varying humidity, the test must be carried out in an appropriately controlled environment. Similarly, if the test material is known to develop an electrostatic charge, careful observation must be made to ensure that such charging is not influencing the analysis. An antistatic agent, such as colloidal silicon dioxide and/or aluminum oxide, may be added at a 0.5 percent (m/m) level to minimize this effect. If both of the above effects cannot be eliminated, an alternative particle-sizing technique must be selected.

Agitation Method

Several different sieve and powder agitation devices are commercially available, all of which may be used to perform sieve analyses. However, the different methods of agitation may give different results for sieve analyses and endpoint determinations because of the different types and magnitude of the forces acting on the individual particles under test. Methods using mechanical agitation or electromagnetic agitation, and that can induce either a vertical oscillation or a horizontal circular motion, or tapping or a combination of both tapping and horizontal circular motion are available. Entrainment of the particles in an air stream may also be used. The results must indicate which agitation method was used and the agitation parameters used (if they can be varied), because changes in the agitation conditions will give different results for the sieve analysis and endpoint determinations, and may be sufficiently different to give a failing result under some circumstances.

Endpoint Determination

The test sieving analysis is complete when the weight on any of the test sieves does not change by more than 5% or 0.1 g (10% in the case of 76-mm sieves) of the previous weight on that sieve. If less than 5% of the total specimen weight is present on a given sieve, the endpoint for that sieve is increased to a weight change of not more than 20% of the previous weight on that sieve.

If more than 50% of the total specimen weight is found on any one sieve, unless this is indicated in the monograph, the test should be repeated, but with the addition to the sieve nest of a more coarse sieve, intermediate between that carrying the excessive weight and the next coarsest sieve in the original nest, i.e., addition of the ISO series sieve omitted from the nest of sieves.

SIEVING METHODS

Mechanical Agitation

DRY SIEVING METHOD

Tare each test sieve to the nearest 0.1 g. Place an accurately weighed quantity of test specimen on the top (coarsest) sieve, and replace the lid. Agitate the nest of sieves for 5 minutes. Then carefully remove each from the nest without loss of material. Reweigh each sieve, and determine the weight of material on each sieve. Determine the weight of material in the collecting pan in a similar manner. Reassemble the nest of sieves, and agitate for 5 minutes. Remove and weigh each sieve as previously described. Repeat these steps until the endpoint criteria are met (see *Endpoint Determination* under *Test Sieves*). Upon completion of the analysis, reconcile the weights of material. Total losses must not exceed 5% of the weight of the original test specimen.

Repeat the analysis with a fresh specimen, but using a single sieving time equal to that of the combined times used above. Confirm that this sieving time conforms to the requirements for endpoint determination. When this endpoint has been validated for a specific material, then a single fixed time of sieving may be used for future analyses, providing the particle size distribution falls within normal variation.

If there is evidence that the particles retained on any sieve are aggregates rather than single particles, the use of mechanical dry sieving is unlikely to give good reproducibility, and a different particle size analysis method should be used.

Air Entrainment Methods

AIR JET and SONIC SIFTER SIEVING

Different types of commercial equipment that use a moving air current are available for sieving. A system that uses a single sieve at a time is referred to as air jet sieving. It uses the same general sieving methodology as that described under the *Dry Sieving Method,* but with a standardized air jet replacing the normal agitation mechanism. It requires sequential analyses on individual sieves starting with the finest sieve to obtain a particle size distribution. Air jet sieving often includes the use of finer test sieves than those used in ordinary dry sieving. This technique is more suitable where only oversize or undersize fractions are needed.

In the sonic sifting method, a nest of sieves is used, and the test specimen is carried in a vertically oscillating column of air that lifts the specimen and then carries it back against the mesh openings at a given number of pulses per minute. It may be necessary to lower the sample amount to 5 g, when sonic sifting is employed.

The air jet sieving and sonic sieving methods may be useful for powders or granules when mechanical sieving techniques are incapable of giving a meaningful analysis.

These methods are highly dependent upon proper dispersion of the powder in the air current. This requirement may be hard to achieve if the method is used at the lower end of the sieving range (i.e., below 75 µm), when the particles tend to be more cohesive, and especially if there is any tendency for the material to develop an electrostatic charge. For the above reasons endpoint determination is particularly critical, and it is very important to confirm that the oversize material comprises single particles and is not composed of aggregates.

INTERPRETATION

The raw data must include the weight of test specimen, the total sieving time, and the precise sieving methodology and the set values for any variable parameters, in addition to the weights retained on the individual sieves and in the pan. It may be convenient to convert the raw data into a cumulative weight distribution, and if it is desired to express the distribution in terms of a cumulative weight undersize, the range of sieves used should include a sieve through which all the material passes. If there is evidence on any of the test sieves that the material remaining on it is composed of aggregates formed during the sieving process, the analysis is invalid.

General Chapters

⟨787⟩ SUBVISIBLE PARTICULATE MATTER IN THERAPEUTIC PROTEIN INJECTIONS

This chapter can be used as an alternative to *USP* general chapter *Particulate Matter in Injections* ⟨788⟩. It specifically addresses therapeutic protein injections and related preparations, allowing use of smaller test product volumes and smaller test aliquots to determine particulate matter content, with sample-handling instructions that take into account the issues associated with the analysis of these materials. Although the methodology and limits presented in this chapter are preferred for therapeutic protein injections, the use of regulatory-acceptable alternative analytical methods with adequately developed subvisible particulate limits is acceptable.

Therapeutic protein injections are biotechnology-derived products of protein or peptides and other therapeutic protein injections such as naturally sourced therapeutic proteins, including their final infusion preparations. Certain preparations that are not amenable to these tests, such as prophylactic vaccines, are not included in this guidance.

Particulate matter in therapeutic protein injections consists of mobile undissolved substances that may originate from various sources. The particles may be (a) truly foreign, or "extrinsic", e.g., unexpected foreign material, such as cellulose; (b) "intrinsic" resulting from addition or by insufficient cleaning during manufacturing, such as tank metals or gaskets, lubricants, filling hardware, or resulting from instability, e.g., changes over time, such as insoluble drug salt forms or package degradation; and (c) "inherent", such as particles of the protein or formulation components. All of these particle types may be detected and counted in the test method described in this chapter. In addition, for light obscuration (LO) methods, gas bubbles are commonly counted during particulate matter testing and are counting artifacts. For the determination of subvisible particles in therapeutic protein injections, the *Light Obscuration Particle Count Test* is the preferred method. The *Microscopic Particle Count Test* similar to that described in ⟨788⟩ may be useful in cases where the particles being analyzed are primarily nonproteinaceous, or in cases where examination of particle characteristics may be important. The results from this test are not equivalent to those from the LO test.

Not all therapeutic protein injections can be examined directly for subvisible particles by the LO method. When the test method is not directly applicable to specific test samples, as indicated by issues with method verification (reproducibility, linearity), a quantitative dilution with an appropriate diluent can be made to allow analysis by light obscuration. Method verification may be required to ensure the appropriateness of the sample handling procedures and the performance of the method for each drug product.

In the tests described below, the results obtained by examining a discrete unit or group of units for particulate matter cannot be extrapolated with certainty to other units that remain untested. Thus, sampling plans based on known operational factors must be developed to support valid inferences from observed data in order to characterize the level of particulate matter in a large group of units. Sampling plans should be based on considerations of product volume, particle numbers historically found in comparison to limits, particle size distribution, and variability of particle counts between units. Products that are used with a final filter during administration (in-line) are exempt from these requirements, providing that scientific data are available to justify the exemption.

LIGHT OBSCURATION PARTICLE COUNT TEST

Analysts should use a suitable instrument that is based on the principle of light blockage and that allows an automatic determination of particle size and number.

The sensor selected must be appropriate for the intended particle size range and anticipated particle count. Several standardization steps such as sample volume accuracy, sample flow rate, sensor resolution, calibration, and particle count accuracy are important for the proper operation of the apparatus and are further reviewed in general information chapter *Methods for the Determination of Particulate Matter in Injections and Ophthalmic Solutions* ⟨1788⟩.[1]

For equipment calibration purposes, use of NIST-traceable particle size standards or equivalent traceable standards, see ⟨1788⟩. These standards generally are between 2 and 100 µm. Analysts should verify the performance of the apparatus using the USP Particle Count RS dispersed in particle-free water at an appropriate volume. Care must be taken to avoid agglomeration of particles during dispersion in the calibration process. The definition for *Particle-Free Water* is provided in the introductory section of *Reagents, Indicators, and Solutions*.

General Precautions

Carry out the test under conditions that limit ingress of particulate matter, preferably in a laminar-flow cabinet. The glassware and equipment used should be properly cleaned and handled to remain particle free. Care should be taken to minimize shaking and other stresses to the preparations (for liquids or reconstituted powders) and to prevent introduction of air bubbles

[1] For informational purposes only, analysts can refer to ⟨1788⟩, which may be a helpful but not mandatory resource.

General Chapters

into the preparation under examination. This is particularly important when preparations are combined or transferred to the container in which the determination will be carried out.

Preparatory Steps

Glassware selected for the method should accommodate the volume of blank and sample aliquots, allow easy mixing, and be amenable to repeated cleaning used to prevent any significant contribution to particle counts. Typically, separate vessels are utilized and retained specifically for this test only. Cleaning and rinsing of the method glassware should be in close proximity to the counting area.

The work area and equipment should be separated from general lab traffic. A good supply of filtered water (to comply with *Particle-Free Water*) and support equipment should be maintained and available for the routine work. Refer to general information chapter ⟨1788⟩.[1]

Two types of system controls are recommended: a *Blank Test* and *System Suitability Verification*.

1. The *Blank Test* involves the following:
   a. Run at the start of the day or analysis to ensure that proper care has been used in preparing the site and apparatus for use (*Environmental Blank*).
   b. Any additional blanks run throughout the day (such as between product families) should also comply with the *Blank Test* requirements (*Procedural Blank*).
2. The *System Suitability Verification* is run to verify proper count/mL and ratio for the current USP Particle Count RS or equivalent commerical standard. See general information chapter ⟨1788⟩.[1]

Blank Test

In order to check that (a) the environment is suitable for the test, (b) the glassware is properly cleaned, and (c) the water or suitable solvent that will be used is particle free (b and c constitute the "blank"), the following test is carried out. Determine the count in five aliquots of degassed particle-free water or suitable solvent, representative of the product test volume (but NLT 1 mL). If the number of particles 10 µm or greater in size exceeds 1 particle per mL for the combined aliquot volume, the precautions taken for the test are not sufficient. Repeat the preparatory steps until the environment, glassware, and water are suitable for the test determination. The *Blank Test* must be run initially each day (environment) and is recommended throughout the daily routine, especially between product families (procedural).

System Suitability Verification

To verify system suitability, *Particle-Free Water* and the USP Particle Count RS or equivalent commercial standard aqueous suspension are tested from the same or similar type of container as product samples, are degassed in the same manner, and generally are handled like the test article. Ensure that the system can meet the *Blank Test* requirement. Determine the particulate matter in a sample of the USP Particle Count RS that corresponds to the product test volume, according to the method described below. Results from the Standard preparation should fall within the stated specifications of the Reference Standard.

Method

Product samples are tested in the manner that most suitably represents delivery (e.g., expelled syringe contents). For parenterals that have a sufficient volume (i.e., volume large enough to facilitate testing), testing of individual units is often diagnostic. For parenteral products that do not have a sufficient volume, carefully and thoroughly mix each unit, then combine the contents of a suitable number of units in a separate container to obtain the volume required for a single test (generally 0.2–5.0 mL). If a dilution is performed, ensure that the blank container has sufficient volume for product and diluents and that few, if any, particles are introduced in the process. Open each unit cautiously, remove the sealing closure, and avoid contamination of the contents before sampling, diluting, or, if necessary, pooling.

When a product solvent is specified, e.g., for lyophilized solids or powders for parenteral use, the reconstitution or dilution must be performed with the appropriate amount of specified solvent. In this case, the solvent itself may be tested to ensure that it is not a significant source of particles. Subtraction of the solvent particle count from the total count is not allowed.

Eliminating gas bubbles is a key step, especially for proteinaceous products that readily entrain gas. Two methods are recommended: either allowing the product fluid to stand under ambient pressure or applying a gentle (e.g., 75 Torr) vacuum. Other methods may be used when demonstrated to be suitable. Sonication should be avoided.

Once the samples have been degassed, they must be remixed gently to suspend all particles by mixing the contents of the sample gently but thoroughly by an appropriate means, e.g., slow swirling of the container by hand. Inversion to mix the product fluid is not recommended at any time.

Immediately after mixing, withdraw NLT four aliquots, each of a volume appropriate for the instrument's capacity (generally 0.2–5.0 mL). Count the number of particles over the selected size range, including particles equal to or greater than 10 and 25 µm. Disregard the result obtained for the first aliquot, and calculate the mean number of particles at each size range for the

remaining aliquots of the preparation being tested. A tare volume also can be applied to control sampling that should be representative of the sensor dynamic range and needle volume.

General Considerations

Dilution is allowed as long as the diluent and methods are demonstrated to be appropriate and the smallest level of dilution that allows for reproducible testing is used. Under certain circumstances dilution of samples may be required to obtain reliable results. This may be the case with high-concentration products and/or high-viscosity products that cannot be drawn into the instrument properly; products that cause saturation of the instrument sensor due to high counts, especially in the smaller than 10-µm size ranges; and cases where the high concentration results in very small differences in refractive index between the solution and the protein aggregates, etc. In situations where sample dilution is conducted, the underlying rationale for the dilution as well as the suitability of the selected dilution scheme including choice of diluent must be demonstrated. Suitability of the dilution scheme and of the diluent may be assessed by demonstrating consistency of results over a dilution range. Bridging studies with and without dilution at size ranges intended for particle counting should be considered. Studies exploring the ability of dilution to decrease the number of aggregates, or to increase particles due to changes in the ratio of protein to excipients, should also be performed. An orthogonal technique may be used to justify the suitability of the method by verifying the impact of dilution.

Evaluation

The values below are derived historically from general chapters ⟨788⟩ and ⟨789⟩. If specifications are different from those stated below, they will be indicated in an individual monograph where available.

For parenteral products that are therapeutic protein injections for infusion or injection supplied in containers with a nominal content of less than or equal to 100 mL:

The average number of particles present in the units tested should not exceed 6000 per container equal to or greater than 10 µm and should not exceed 600 per container equal to or greater than 25 µm.

For therapeutic protein injections supplied in containers with a nominal content of more than 100 mL, and parenteral infusion preparations or injections with a nominal content of more than 100 mL:

The average number of particles present in the units tested should not exceed 25/mL equal to or greater than 10 µm and should not exceed 3/mL equal to or greater than 25 µm. Also, total particle load should not exceed 6000 per container equal to or greater than 10 µm and should not exceed 600 per container equal to or greater than 25 µm.

Products that are used with a final filter during administration (in-line) are exempt from these requirements, providing that scientific data are available to justify the exemption. However, filtrates are expected to comply with the guideline. For products supplied or first reconstituted in <100 mL, and then diluted for infusion in a volume >100 mL, particle content should be assessed both before and after dilution and evaluated based on their final volume.

MICROSCOPIC PARTICLE COUNT TEST

As noted, the LO method is the preferred method for therapeutic protein injections and parenteral infusions. However, the microscopic method may be used when appropriate, such as determination of extrinsic and intrinsic particle types only. It should be demonstrated, however, that particular classes of particles (e.g., inherent) are also being counted when using this method. For the determination of product acceptability, apply the limits for the membrane microscopic test in general chapter ⟨788⟩. Because of the interference of some protein particles and their physical characteristics (fragile or translucent), the results of the *Microscopic Particle Count Test* are not equivalent to those of the *Light Obscuration Particle Count Test*, and the two methods cannot be considered interchangeable.

⟨788⟩ PARTICULATE MATTER IN INJECTIONS

This general chapter is harmonized with the corresponding texts of the *European Pharmacopoeia* and/or the *Japanese Pharmacopoeia*. These pharmacopeias have undertaken not to make any unilateral change to this harmonized chapter. Portions of the present general chapter text that are national USP text, and therefore not part of the harmonized text, are marked with symbols (•,) to specify this fact.

Particulate matter in injections and parenteral infusions consists of extraneous mobile undissolved particles, other than gas bubbles, unintentionally present in the solutions.

•As stated in *Injections and Implanted Drug Products* ⟨1⟩, solutions for injection administered by the intramuscular or subcutaneous route must meet the requirements of *Particulate Matter in Injections* ⟨788⟩. This requirement has been indefinitely postponed for products for veterinary use. Parenterals packaged and labeled exclusively for use as irrigating solutions are exempt from the requirements of *Particulate Matter in Injections* ⟨788⟩. Radiopharmaceutical preparations are exempt from the requirements of *Particulate Matter in Injections* ⟨788⟩. Parenteral products for which the labeling specifies use of a final filter prior to administration are exempt from the requirements of *Particulate Matter in Injections* ⟨788⟩, provided that scientific data are available to justify this exemption.•

For the determination of particulate matter, two procedures, *Method 1 (Light Obscuration Particle Count Test)* and *Method 2 (Microscopic Particle Count Test)*, are specified hereinafter. When examining injections and parenteral infusions for subvisible particles, *Method 1* is preferably applied. However, it may be necessary to test some preparations by the *Light Obscuration Particle Count Test* followed by the *Microscopic Particle Count Test* to reach a conclusion on conformance to the requirements.

Not all parenteral preparations can be examined for subvisible particles by one or both of these methods. When *Method 1* is not applicable, e.g., in the case of preparations having reduced clarity or increased viscosity, the test should be carried out according to *Method 2*. Emulsions, colloids, and liposomal preparations are examples. Similarly, products that produce air or gas bubbles when drawn into the sensor may also require microscopic particle count testing. If the viscosity of the preparation to be tested is sufficiently high so as to preclude its examination by either test method, a quantitative dilution with an appropriate diluent may be made to decrease viscosity, as necessary, to allow the analysis to be performed.

The results obtained in examining a discrete unit or group of units for particulate matter cannot be extrapolated with certainty to other units that remain untested. Thus, statistically sound sampling plans must be developed if valid inferences are to be drawn from observed data to characterize the level of particulate matter in a large group of units.

•For the purpose of this chapter, small-volume parenteral is synonymous with small-volume injection, and large-volume parenteral is synonymous with large-volume injection.•

METHOD 1 LIGHT OBSCURATION PARTICLE COUNT TEST

Use a suitable apparatus based on the principle of light blockage that allows for an automatic determination of the size of particles and the number of particles according to size. The definition for *particle-free water* is provided in *Reagents, Indicators, and Solutions—Reagent Specifications*.

The apparatus is calibrated using dispersions of spherical particles of known sizes between 10 µm and 25 µm. These standard particles are dispersed in *particle-free water*. Care must be taken to avoid aggregation of particles during dispersion. •System suitability can be verified by using the USP Particle Count RS.•

General Precautions

The test is carried out under conditions limiting particulate matter, preferably in a laminar flow cabinet.

Very carefully wash the glassware and filtration equipment used, except for the membrane filters, with a warm detergent solution, and rinse with abundant amounts of water to remove all traces of detergent. Immediately before use, rinse the equipment from top to bottom, outside and then inside, with *particle-free water*.

Take care not to introduce air bubbles into the preparation to be examined, especially when fractions of the preparation are being transferred to the container in which the determination is to be carried out.

In order to check that the environment is suitable for the test, that the glassware is properly cleaned, and that the water to be used is particle-free, the following test is carried out. Determine the particulate matter in five samples of *particle-free water*, each of 5 mL, according to the method described below. If the number of particles of 10 µm or greater size exceeds 25 for the combined 25 mL, the precautions taken for the test are not sufficient. The preparatory steps must be repeated until the environment, glassware, and water are suitable for the test.

Method

Mix the contents of the sample by slowly inverting the container 20 times successively. If necessary, cautiously remove the sealing closure. Clean the outer surfaces of the container opening using a jet of *particle-free water*, and remove the closure, avoiding any contamination of the contents. Eliminate gas bubbles by appropriate measures such as allowing to stand for 2 min or sonicating.

For large-volume parenterals, single units are tested. For small-volume parenterals less than 25 mL in volume, the contents of 10 or more units are combined in a cleaned container to obtain a volume of NLT 25 mL; the test solution may be prepared by mixing the contents of a suitable number of vials and diluting to 25 mL with *particle-free water* or with an appropriate particle-free solvent when *particle-free water* is not suitable. Small-volume parenterals having a volume of 25 mL or more may be tested individually.

Powders for parenteral use are reconstituted with *particle-free water* or with an appropriate particle-free solvent when *particle-free water* is not suitable.

•For pharmacy bulk packages for parenteral use labeled "Not for Direct Infusion", proceed as directed for small-volume parenterals when the volume is 25 mL or more. Calculate the test result on a portion that is equivalent to the maximum dose given in the labeling. For example, if the total bulk package volume is 100 mL and the maximum dose volume is 10 mL, then the average particle count per mL would be multiplied by 10 to obtain the test result based on the 10-mL maximum dose. [NOTE—For the calculation of test results, consider this maximum dose portion to be equivalent to the contents of one full container.]

Products packaged with dual compartments meant to hold a drug product and a solvent should be prepared and tested as directed for large-volume parenterals or small-volume parenterals, depending on container volume. Mix each unit as directed in the labeling, activating and agitating to ensure thorough mixing of the separate components and drug dissolution.•

The number of test specimens must be adequate to provide a statistically sound assessment. For large-volume parenterals or for small-volume parenterals having a volume of 25 mL or more, fewer than 10 units may be tested, using an appropriate sampling plan.

Remove four portions, NLT 5 mL each, and count the number of particles equal to or greater than 10 µm and 25 µm. Disregard the result obtained for the first portion, and calculate the mean number of particles for the preparation to be examined.

Evaluation

For preparations supplied in containers with a nominal volume of more than 100 mL, apply the criteria of *Test 1.A.*

For preparations supplied in containers with a nominal volume of less than 100 mL, apply the criteria of *Test 1.B.*

For preparations supplied in containers with a nominal volume of 100 mL, apply the criteria of *Test 1.B.* [NOTE—*Test 1.A* is used in the *Japanese Pharmacopoeia.*]

If the average number of particles exceeds the limits, test the preparation by the *Microscopic Particle Count Test.*

TEST 1.A

Solutions for parenteral infusion or solutions for injection supplied in containers with a nominal content of more than 100 mL: The preparation complies with the test if the average number of particles present in the units tested does not exceed 25 per mL equal to or greater than 10 µm and does not exceed 3 per mL equal to or greater than 25 µm.

TEST 1.B

Solutions for parenteral infusion or solutions for injection supplied in containers with a nominal content of less than 100 mL: The preparation complies with the test if the average number of particles present in the units tested does not exceed 6000 per container equal to or greater than 10 µm and does not exceed 600 per container equal to or greater than 25 µm.

METHOD 2 MICROSCOPIC PARTICLE COUNT TEST

Use a suitable binocular microscope, a filter assembly for retaining particulate matter, and a membrane filter for examination.

The microscope is adjusted to 100 ± 10 magnifications and is equipped with an ocular micrometer calibrated with an objective micrometer, a mechanical stage capable of holding and traversing the entire filtration area of the membrane filter, and two suitable illuminators to provide episcopic illumination in addition to oblique illumination.

The ocular micrometer is a circular diameter graticule (see *Figure 1*) and consists of a large circle divided by crosshairs into quadrants, transparent and black reference circles 10 µm and 25 µm in diameter at 100 magnifications, and a linear scale graduated in 10-µm increments. It is calibrated using a stage micrometer that is certified by either a domestic or international standard institution. A relative error of the linear scale of the graticule within ±2% is acceptable. The large circle is designated the graticule field of view (GFOV).

General Chapters

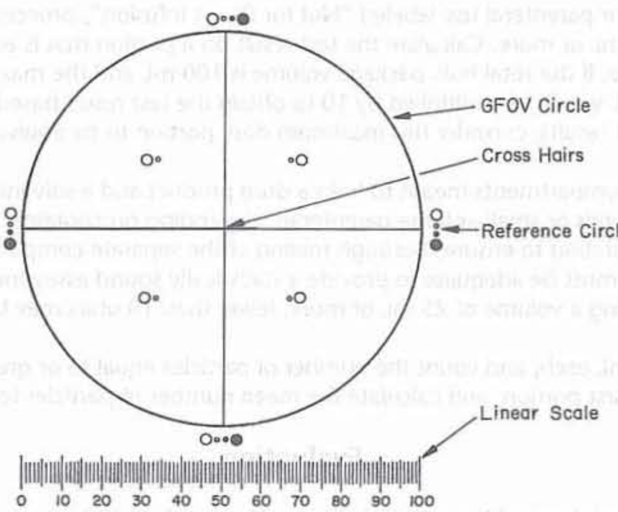

Figure 1. Circular diameter graticule. The large circle divided by crosshairs into quadrants is designated the graticule field of view (GFOV). Transparent and black circles having 10-µm and 25-µm diameters at 100× are provided as comparison scales for particle sizing.

Two illuminators are required. One is an episcopic brightfield illuminator internal to the microscope, the other is an external, focusable auxiliary illuminator that can be adjusted to give reflected oblique illumination at an angle of 10°–20°.

The filter assembly for retaining particulate matter consists of a filter holder made of glass or other suitable material, and is equipped with a vacuum source and a suitable membrane filter.

The membrane filter is of suitable size, black or dark gray in color, nongridded or gridded, and 1.0 µm or finer in nominal pore size.

General Precautions

The test is carried out under conditions limiting particulate matter, preferably in a laminar flow cabinet.

Very carefully wash the glassware and filter assembly used, except for the membrane filter, with a warm detergent solution, and rinse with abundant amounts of water to remove all traces of detergent. Immediately before use, rinse both sides of the membrane filter and the equipment from top to bottom, outside and then inside, with *particle-free water.*

In order to check that the environment is suitable for the test, that the glassware and the membrane filter are properly cleaned, and that the water to be used is particle-free, the following test is carried out. Determine the particulate matter of a 50-mL volume of *particle-free water* according to the method described below. If more than 20 particles 10 µm or larger in size or if more than five particles 25 µm or larger in size are present within the filtration area, the precautions taken for the test are not sufficient. The preparatory steps must be repeated until the environment, glassware, membrane filter, and water are suitable for the test.

Method

Mix the contents of the samples by slowly inverting the container 20 times successively. If necessary, cautiously remove the sealing closure. Clean the outer surfaces of the container opening using a jet of *particle-free water,* and remove the closure, avoiding any contamination of the contents.

For large-volume parenterals, single units are tested. For small-volume parenterals less than 25 mL in volume, the contents of 10 or more units are combined in a cleaned container; the test solution may be prepared by mixing the contents of a suitable number of vials and diluting to 25 mL with *particle-free water* or with an appropriate particle-free solvent when *particle-free water* is not suitable. Small-volume parenterals having a volume of 25 mL or more may be tested individually.

Powders for parenteral use are constituted with *particle-free water* or with an appropriate particle-free solvent when *particle-free water* is not suitable.

The number of test specimens must be adequate to provide a statistically sound assessment. For large-volume parenterals or for small-volume parenterals having a volume of 25 mL or more, fewer than 10 units may be tested, using an appropriate sampling plan.

Wet the inside of the filter holder fitted with the membrane filter with several mL of *particle-free water.* Transfer to the filtration funnel the total volume of a solution pool or of a single unit, and apply a vacuum. If needed, add stepwise a portion of the solution until the entire volume is filtered. After the last addition of solution, begin rinsing the inner walls of the filter holder by using a jet of *particle-free water.* Maintain the vacuum until the surface of the membrane filter is free from liquid. Place the membrane filter in a Petri dish, and allow the membrane filter to air-dry with the cover slightly ajar. After the membrane

filter has been dried, place the Petri dish on the stage of the microscope, scan the entire membrane filter under the reflected light from the illuminating device, and count the number of particles that are equal to or greater than 10 µm and the number of particles that are equal to or greater than 25 µm. Alternatively, partial membrane filter count and determination of the total filter count by calculation is allowed. Calculate the mean number of particles for the preparation to be examined.

The particle sizing process with the use of the circular diameter graticule is carried out by estimating the equivalent diameter of the particle in comparison with the 10 µm and 25 µm reference circles on the graticule. Thereby the particles are not moved from their initial locations within the graticule field of view and are not superimposed on the reference circles for comparison. The inner diameter of the transparent graticule reference circles is used to size white and transparent particles, while dark particles are sized by using the outer diameter of the black opaque graticule reference circles.

In performing the *Microscopic Particle Count Test*, do not attempt to size or enumerate amorphous, semiliquid, or otherwise morphologically indistinct materials that have the appearance of a stain or discoloration on the membrane filter. These materials show little or no surface relief and present a gelatinous or film-like appearance. In such cases, the interpretation of enumeration may be aided by testing a sample of the solution by the *Light Obscuration Particle Count Test*.

Evaluation

For preparations supplied in containers with a nominal volume of more than 100 mL, apply the criteria of *Test 2.A*.

For preparations supplied in containers with a nominal volume of less than 100 mL, apply the criteria of *Test 2.B*.

For preparations supplied in containers with a nominal volume of 100 mL, apply the criteria of *Test 2.B*. [NOTE—*Test 2.A* is used in the *Japanese Pharmacopoeia*.]

TEST 2.A

(Solutions for parenteral infusion or solutions for injection supplied in containers with a nominal content of more than 100 mL: The preparation complies with the test if the average number of particles present in the units tested does not exceed 12 per mL equal to or greater than 10 µm and does not exceed 2 per mL equal to or greater than 25 µm.

TEST 2.B

Solutions for parenteral infusion or solutions for injection supplied in containers with a nominal content of less than 100 mL: The preparation complies with the test if the average number of particles present in the units tested does not exceed 3000 per container equal to or greater than 10 µm and does not exceed 300 per container equal to or greater than 25 µm.

⟨789⟩ PARTICULATE MATTER IN OPHTHALMIC SOLUTIONS

Particulate matter consists of mobile, randomly sourced, extraneous substances, other than gas bubbles, that cannot be quantitated by chemical analysis because of the small amount of material they represent and because of their heterogeneous composition. Ophthalmic solutions should be essentially free from particles that can be observed on visual inspection. The tests described herein are physical tests performed for the purpose of enumerating extraneous particles within specific size ranges.

Every ophthalmic solution is subject to the particulate matter limits set forth for the test being applied, unless otherwise specified in the individual monograph. When higher limits are appropriate, they will be specified in the individual monograph. Ophthalmic preparations that are suspensions, emulsions, or gels are exempt from these requirements, as are medical devices. Refer to the specific monograph when a question of test applicability occurs.

Light obscuration and microscopic procedures for the determination of particulate matter in ophthalmic solutions are identical to those for injections; therefore, where appropriate, *USP* general test chapter *Particulate Matter in Injections* ⟨788⟩ is cross-referenced. This chapter provides a test approach in two stages. The ophthalmic solution is first tested by the light obscuration procedure (stage 1). If it fails to meet the prescribed limits, it must pass the microscopic procedure (stage 2) with its own set of test limits. Where for technical reasons the ophthalmic solution cannot be tested by light obscuration, microscopic testing may be used exclusively. Documentation is required, demonstrating that the light obscuration procedure is incapable of testing the ophthalmic solution or that it produces invalid results.

It is expected that most articles will meet the requirements on the basis of the light obscuration test alone; however, it may be necessary to test some articles by the light obscuration test followed by the microscopic test to reach a conclusion on conformance to requirements. Any product that is not a pure solution having a clarity and a viscosity approximating those of water may provide erroneous data when analyzed by the light obscuration counting method. Such materials may be analyzed by

the microscopic counting method. In some instances, the viscosity of a material to be tested may be sufficiently high so as to preclude its analysis by either test method. In this event, a quantitative dilution with an appropriate diluent may be made to decrease viscosity, as necessary, to allow the analysis to be performed.

In the tests described below, the results obtained by examining a discrete unit or group of units for particulate matter cannot be extrapolated with certainty to other units that remain untested. Thus, sampling plans based on known operational factors must be developed if valid inferences are to be drawn from observed data to characterize the level of particulate matter in a large group of units. Sampling plans need to be based on consideration of product volume, particle numbers historically found to be present in comparison to limits, size distribution of particles present, and variability of particle counts between units.

LIGHT OBSCURATION PARTICLE COUNT TEST

This test applies to ophthalmic solutions, including solutions constituted from sterile solids, for which a test for *Particulate matter* is specified in the individual monograph. The test counts suspended particles that are solid or liquid.

Test Apparatus, Instrument Standardization, Test Environment, Test Procedure, and Calculations

Proceed as directed in *Particulate Matter in Injections* ⟨788⟩, *Method 1 Light Obscuration Particle Count Test*.

Interpretation

The ophthalmic solution meets the requirements of the test if the average number of particles present in the units tested does not exceed the appropriate value listed in *Table 1*. If the average number of particles exceeds the limit, test the article by the *Microscopic Particle Count Test*.

Table 1. Light Obscuration Particle Test Limits

	Diameter		
	≥10 μm	**≥25 μm**	**≥50 μm**
Number of particles	50/mL	5/mL	2/mL

MICROSCOPIC PARTICLE COUNT TEST

Some articles cannot be tested meaningfully by light obscuration. In such cases, individual monographs clearly specify that only a microscopic particle count is to be performed. The microscopic particle count test enumerates subvisible, essentially solid, particulate matter in ophthalmic solutions after collection on a microporous membrane filter. Some ophthalmic solutions, such as solutions that do not filter readily because of their high viscosity, may be exempted from analysis using the microscopic test.

When performing the microscopic test, do not attempt to size or enumerate amorphous, semiliquid, or otherwise morphologically indistinct materials that have the appearance of a stain or discoloration on the membrane surface. These materials show little or no surface relief and present a gelatinous or film-like appearance. Because in solution this material consists of units on the order of 1 μm or less, which may be counted only after aggregation or deformation on an analytical membrane, interpretation of enumeration may be aided by testing a sample of the solution by the light obscuration particle count method.

Test Apparatus, Test Environment, Test Procedure, and Enumeration of Particles

Proceed as directed in *Particulate Matter in Injections* ⟨788⟩, *Method 2 Microscopic Particle Count Test*.

Interpretation

The ophthalmic solution meets the requirements of the test if the average number of particles present in the units tested does not exceed the appropriate value listed in *Table 2*.

Table 2. Microscopic Particle Test Limits

	Diameter		
	≥10 μm	**≥25 μm**	**≥50 μm**
Number of particles	50/mL	5/mL	2/mL

⟨790⟩ VISIBLE PARTICULATES IN INJECTIONS

INTRODUCTION

All products intended for parenteral administration must be visually inspected for the presence of particulate matter as specified in *Injections and Implanted Drug Products* ⟨1⟩. Dry solids, from which constituted solutions are prepared for injection, meet the requirements for *Completeness and clarity of solutions* in *Injections and Implanted Drug Products* ⟨1⟩ when they are prepared just before use. Where used in this chapter, the term *essentially free* means that when injectable drug products are inspected as described herein, no more than the specified number of units may be observed to contain visible particulates. Particulate matter is defined in *Particulate Matter in Injections* ⟨788⟩ as extraneous mobile undissolved particles, other than gas bubbles, unintentionally present in solutions. See *Subvisible Particulate Matter in Therapeutic Protein Injections* ⟨787⟩ for additional information on inherent, intrinsic, and extrinsic particulates. Examples of such particulate matter include, but are not limited to, fibers, glass, metal, elastomeric materials, and precipitates. However, some products may contain inherent particles or agglomerates; in such cases, requirements for these particular visible particulates are specified in the individual monograph or in the approved regulatory application but the control and acceptance criteria for extraneous particles described in this chapter apply.

Where the nature of the contents or the container–closure system permits only limited capability for inspection of the total contents, the 100% inspection of a batch shall be supplemented with the inspection of constituted (e.g., dried) or withdrawn (e.g., dark amber container, suspensions, highly colored liquids) contents of a sample of containers from the batch. The destructive nature of these tests requires the use of a sample smaller[1] than those traditionally used for non-destructive acceptance sampling after 100% inspection. Although the tests described in this chapter may be useful during studies to examine product stability, this chapter is not intended to establish any new testing requirements for stability studies.

INSPECTION PROCEDURE

Used along with 100% inspection during the manufacturing process, this procedure is sufficient to demonstrate that the batch is essentially free of visible particulates. A complete program for the control and monitoring of particulate matter remains an essential prerequisite.

Inspected units must be free of visible particulates when examined without magnification (except for optical correction as may be required to establish normal vision) against a black background and against a white background. Illumination at the inspection point is maintained at a minimum intensity between 2000 and 3750 lux. This can be achieved through the use of two 13-W or 15-W fluorescent lamps (e.g., F13/T5 or F15/T8). The use of a high-frequency ballast to reduce flicker from the fluorescent lamps is recommended. Alternative light sources (e.g., incandescent, LED) that provide illumination at the point of inspection within the specified minimum intensity range are acceptable. Higher illumination intensity is recommended for examination of colored solutions or product in containers other than clear glass.

Before performing the inspection, remove any adherent labels from the container, and wash and dry the outside. The unit under inspection should be gently swirled and/or inverted, ensuring that no air bubbles are produced, and inspected for approximately 5 s against each of the backgrounds. The presence of any particles should be recorded.

Sampling at Batch Release (After 100% Manufacturing Inspection)

Sample and inspect the batch using ANSI/ASQ Z1.4 (or ISO 2859-1). General Inspection Level II, single sampling plans for normal inspection with an AQL of 0.65%. Alternative sampling plans with equivalent or better protection are acceptable. NMT the specified number of units contains visible particulates.

Product in Distribution[2]

If it becomes necessary to evaluate product that has been shipped to customers (e.g., because of a complaint or regulatory concern), sample and inspect 20 units. If no particles are observed in the sample, the batch is considered essentially free of visible particulates. If available, additional units may be inspected to gain further information on the risk of particulates in the batch.

[1] The special level sampling plans described in ANSI/ASQ Z1.4–2008 or ISO 2859 are appropriate to guide the selection of sample size and acceptance criteria for this purpose.

[2] Testing outlined in *Product in Distribution* is permissible only if *Sampling at Batch Release (after 100% Manufacturing Inspection)* has been successfully completed.

⟨791⟩ pH

INTRODUCTION

For compendial purposes, pH is defined as the value given by a suitable, properly calibrated, potentiometric sensor and measuring system. [NOTE—The measuring system has traditionally been referred to as the "pH meter." While the pH meter is still in common use, the measuring system can also be embedded inside the pH sensor, and the pH signal can be transmitted digitally to an external device such as a computer, Programmable Logic Controller (PLC), Distributed Control System (DCS), data acquisition system, terminal, or other microprocessor-controlled device.] By definition, pH is equal to $-\log_{10}[a_{H^+}]$ where a_{H^+} is the activity of the hydrogen (H^+) or hydronium ion (H_3O^+), and the hydrogen ion activity very closely approximates the hydrogen ion concentration.

The practical pH scale is defined:

$$pH = pH_S + [(E - E_S)/k]$$

E = measured potential where the galvanic cell contains the solution under test (pH)
E_S = measured potential where the galvanic cell contains the appropriate buffer solution for calibration (pH_S)
k = change in potential/unit change in pH and is derived from the Nernst equation (as follows)

$$k = \log_e(10) \times (RT/nF)$$

R = 8.314 J/mole/°K
T = temperature (°K)
n = moles/half-reaction
F = Faraday constant, 96485 C/mole

The resulting equation is [0.05916 + 0.0001984(T − 25°)] volts at temperature T. Values of k from 15°–35° are provided in *Table 1*.

Table 1. Values of *k* for Various Temperatures

Temperature (°C)	k (V)
15.00	0.05718
20.00	0.05817
25.00	0.05916
30.00	0.06016
35.00	0.06115

Values of k at other temperatures can be determined from the equation above. For practical purposes, values of k are determined from pH sensor calibration.

PH MEASUREMENT SYSTEM

The measurement system consists of: (1) a measuring electrode sensitive to hydrogen-ion activity, typically a glass electrode, though other electrode types are possible, (2) a suitable reference electrode, for example, a silver–silver chloride electrode, and (3) a voltage measurement system with an input resistance capable of measuring at a high input impedance of the pH sensor. The measuring and reference electrode may be separated or combined. The voltage measurement system may be separated from the pH sensor or integrated into the sensor. For most applications, a temperature measurement will be necessary for compensation of the Nernst temperature influence described above. A temperature device may be embedded into the pH sensor, or an external temperature device may be used.

INSTRUMENT REQUIREMENTS

The measurement system shall be capable of performing a two-point (or more) pH calibration (see below). The accuracy of the pH measurement system is described in the *Calibration* section. The resolution of the pH measurement system shall be at least 0.01 pH. The instrument shall be capable of temperature-compensating the pH sensor measurement to convert the millivolt signal to pH units at any temperature, either automatically using a temperature device built into the sensor system or by manual entry of the sample temperature into the measurement system. The accuracy of the temperature measurement system shall be ±1°. The resolution of the temperature measurement system shall be at least 0.1°. Lab-based pH measurements are typically performed at 25 ± 2° unless otherwise specified in the individual monograph or herein. However, temperatures outside this range are acceptable if samples are more conveniently prepared at alternative temperatures. Examples of non-lab-based measurements include test samples inside process pipes, vessels, tanks, and other non-standard processing conditions.

[NOTE—The definitions of pH, the pH scale, and the values assigned to the buffer solutions for calibration are for the purpose of establishing a practical, operational system so that results may be compared between laboratories. The measured pH values do not necessarily correspond exactly to those obtained by the definition, pH = $-\log a_{H^+}$, rather the values obtained are closely related to the activity of the hydrogen-ion in aqueous solutions.] [NOTE—Where a pH measurement system is calibrated by use of an aqueous buffer and then used to measure the "pH" of nonaqueous systems, the ionization constant of the acid or base, the dielectric constant of the medium, the liquid-junction potential (which may give rise to errors of approximately 1 pH unit), and the hydrogen-ion response of the glass electrode are all changed. For these reasons, the values so obtained with solutions that are only partially aqueous in character can be regarded only as apparent pH values.]

BUFFER SOLUTIONS FOR CALIBRATION OF THE PH MEASUREMENT SYSTEM

Buffer solutions for calibration are prepared as directed in *Table 2*.[1] Buffer salts of requisite purity can be obtained from the National Institute of Standards and Technology, other national authorities, or other suppliers. Buffer solutions should be stored in appropriate containers that ensure stability of the pH through the expiry date, and fitted with a tight closure. For buffer solutions greater than 11, the storage should be in containers that are resistant to or reduce carbon dioxide intrusion which would lower the pH of the buffer. For buffer solutions lower than 11, they should typically be prepared at intervals not to exceed 3 months. For buffer solutions greater than 11, they should typically be prepared and used fresh unless carbon dioxide ingress is restricted. All buffer solutions should be prepared using *Purified Water*. *Table 2* indicates the pH of the buffer solutions as a function of temperature. The instructions presented here are intended for the preparation of solutions having the designated molal (m) concentrations. However, in order to facilitate their preparation, the instructions are given in molarity. The difference in concentration between molality and molarity preparations for these buffer solutions is less than 1%, and the pH difference is negligible. Calibration using buffer solutions shall be done in the temperature range of the buffers listed in *Table 2*. [NOTE—The Nernst temperature compensation corrects only for the electrode millivolt output change with temperature, not the actual pH change of the buffer solution with temperature which is unique for each buffer.] Features such as automatic buffer recognition or buffer pH–temperature correction are available for convenience in accommodating the temperature influence on buffer solutions. The pH–temperature response can be determined from the values in *Table 2*.

Table 2. pH Values of Buffer Solutions for Calibration

Temperature (°C)	Potassium Tetraoxalate, 0.05 m	Potassium Hydrogen Tartrate Saturated at 25°	Potassium Dihydrogen Citrate, 0.05 M	Potassium Biphthalate, 0.05 m	Equimolal Phosphate, 0.05 m	Potassium Dihydrogen Phosphate, 0.0087 M, and Disodium Hydrogen Phosphate, 0.0303 M	Sodium Tetraborate, 0.01 m	Sodium Carbonate, 0.025 M, and Sodium Bicarbonate, 0.025 M	Calcium Hydroxide, Saturated at 25°
10	1.67	—	—	4.00	6.92	—	9.33	—	13.00
15	1.67	—	3.80	4.00	6.90	7.45	9.28	10.12	12.81
20	1.68	—	3.79	4.00	6.88	7.43	9.23	10.06	12.63
25	1.68	3.56	3.78	4.01	6.86	7.41	9.18	10.01	12.45
30	1.68	3.55	3.77	4.02	6.85	7.40	9.14	9.97	12.29
35	1.69	3.55	3.76	4.02	6.84	7.39	9.10	9.93	12.13
40	1.69	—	—	4.04	6.84	—	9.07	—	11.98
45	1.70	—	—	4.05	6.83	—	9.04	—	11.84
50	1.71	—	—	4.06	6.83	—	9.01	—	11.71
55	1.72	—	—	4.08	6.83	—	8.99	—	11.57
60	1.72	—	—	4.09	6.84	—	8.96	—	11.45
ΔpH/Δ°C	0.0010	−0.0014	−0.0022	0.0018	−0.0016	−0.0028	−0.0074	−0.0096	−0.0310

Preparation of alternative volumes at the same concentrations to those indicated below is acceptable.

Potassium tetraoxalate, 0.05 m: Dissolve 12.61 g of $KH_3(C_2O_4)_2 \cdot 2H_2O$, and dilute with water to make 1000.0 mL.

Potassium hydrogen tartrate, saturated at 25°: Add $C_4H_5KO_6$ to water until saturation is exceeded at 25°. Then filter or decant.

Potassium dihydrogen citrate, 0.05 M: Dissolve 11.41 g of $C_6H_7KO_7$, and dilute with water to make 1000.0 mL.

[1] Commercially available buffer solutions for pH measurement system, calibrated by methods traceable to the National Institute of Standards and Technology (NIST) or other national authorities, labeled with a pH value accurate to 0.02 pH unit may be used. Solutions prepared from ACS reagent grade materials or other suitable materials, may be used provided the pH of the resultant solution is the same as that of the solution prepared from the NIST (or other national authorities) certified material. Buffer solutions that are greater than 12 should be used immediately, or should be prepared using freshly boiled water, and stored under conditions to minimize carbon dioxide absorption and ingress.

Potassium biphthalate, 0.05 m: Dissolve 10.12 g of $KHC_8H_4O_4$, previously dried at 110° for 1 h, and dilute with water to make 1000.0 mL.

Equimolal phosphate, 0.05 m: Dissolve 3.53 g of disodium hydrogen phosphate (Na_2HPO_4) and 3.39 g of potassium dihydrogen phosphate (KH_2PO_4), each previously dried at 120° for 2 h, and dilute with water to make 1000.0 mL.

Potassium dihydrogen phosphate, 0.0087 M, and disodium hydrogen phosphate, 0.0303 M: Dissolve 1.18 g of KH_2PO_4 and 4.30 g Na_2HPO_4, both dried for 2 h at 120 ± 2°, and dilute with water to make 1000.0 mL.

Sodium tetraborate, 0.01 m: Dissolve 3.80 g of $Na_2B_4O_7 \cdot 10H_2O$, and dilute with water to make 1000.0 mL. Protect from absorption of carbon dioxide.

Sodium carbonate, 0.025 M, and **sodium bicarbonate, 0.025 M:** Dissolve 2.64 g of sodium carbonate (Na_2CO_3) and 2.09 g of sodium bicarbonate ($NaHCO_3$), and dilute with water to make 1000.0 mL.

Calcium hydroxide, saturated at 25°: Add $Ca(OH)_2$ to water until saturation is exceeded at 25°. Use water that has been recently boiled and protected from the atmosphere to limit carbon dioxide absorption. Then filter or decant.

CALIBRATION

Because of variations in the nature and operation of the available pH measurement systems, it is not practical to provide universal directions for the calibration of the measurement system. However, the general principles to be followed are set forth in the following paragraphs. Examine the electrodes, especially the reference electrode and electrolyte level, if a liquid electrolyte is used. If necessary, replenish electrolyte supply, and observe other precautions indicated by the instrument and electrode manufacturers.

The calibration or verification of the pH measurement system should be periodically executed. The historical performance of the measurement system, the criticality of the pH measurement, the maintenance of the pH sensor, and the frequency of measurement operation is used to determine the frequency of the calibration/verification. In addition to the two-point calibration process described below, other multipoint methods may be available for use. These are acceptable if the pH sensor slope and the offset criteria (see step 10) as well as the calibration accuracy (see step 14) are met.

If the pH of the buffer is sensitive to ambient carbon dioxide, then use *Purified Water* that has been recently boiled, and subsequently stored in a container designed to minimize ingress of carbon dioxide.

1. To calibrate the pH measurement system, select three buffer solutions for calibration, preferably from those given in *Table 2*, such that the expected pH of the material under test falls within their range. Two of the buffers are used for the calibration process, and the third buffer is used for verification. The value of the verification buffer shall be between two of the calibration buffers. If the operational range of the pH sensor is beyond the pH range of the buffer solutions in *Table 2*, then either 1) select two nearby pH buffers from *Table 2* or 2) select one from *Table 2* and another documented prepared buffer that is outside the range.
2. Rinse the pH sensor several times with water, then with the first buffer solution.
3. Immerse the pH sensor in the first buffer solution at a temperature within the range of *Table 2*.
4. If automatic temperature measurement and compensation is not included in the measuring system, manually enter the temperature of the buffer and pH value of the buffer solution at that temperature into the instrument. For temperatures not listed in *Table 2*, use linear interpolation to determine the pH value as a function of temperature.
5. Initiate the two-point calibration sequence with the first buffer according to the manufacturer's instructions.
6. Remove the pH sensor from the first buffer and rinse the electrode(s) with water, and then with the second buffer solution.
7. Immerse the pH sensor in the second buffer at a temperature within the range of *Table 2*.
8. If automatic temperature measurement and compensation is not included in the measuring system, manually enter the temperature of the buffer and pH value of the buffer solution at that temperature into the instrument.
9. Continue the two-point calibration sequence with the second buffer according to the manufacturer's instructions.
10. After completion of the two-point calibration process, verify that the pH slope and offset are within acceptable parameters. Typical acceptable parameters are a slope of 90%–105% and an offset of 0 ± 30 mV (0.5 pH units at 25° C). Depending on the pH instrumentation, the pH slope and offset may be determined in software or by manual methods. If using manual methods, follow supplier instructions to calculate the pH sensor slope/offset. If these parameters are not within acceptable parameters, the sensor should be properly cleaned, replenished, serviced, or replaced, and the two-point calibration process shall be repeated.
11. Remove the pH sensor from the second buffer, and rinse thoroughly with water, and then the verification buffer.
12. Immerse the pH sensor in the verification buffer at a temperature within the range of *Table 2*.
13. If automatic temperature measurement and compensation are not included in the measuring system, manually enter the temperature of the buffer and pH value of the buffer solution at that temperature into the instrument.
14. The pH reading shall be within ±0.05 pH of the value in *Table 2* at the buffer solution temperature.

OPERATION

All test samples should be prepared using *Purified Water*, unless otherwise specified in the monograph. All test measurements should use manual or automated Nernst temperature compensation.

1. Prepare the test material according to requirements in the monograph or according to specific procedures. If the pH of the test sample is sensitive to ambient carbon dioxide, then use *Purified Water* that has been recently boiled, and subsequently stored in a container designed to minimize ingress of carbon dioxide.
2. Rinse the pH sensor with water, then with a few portions of the test material.
3. Immerse the pH sensor into the test material and record the pH value and temperature.

In all pH measurements, allow sufficient time for stabilization of the temperature and pH measurement.

Diagnostic functions such as glass or reference electrode resistance measurement may be available to determine equipment deficiencies. Refer to the electrode supplier for diagnostic tools to assure proper electrode function.

Where approximate pH values suffice, indicators and test papers (see *Indicators* and *Indicator and Test Papers*) may be suitable.

For a discussion of buffers, and for the composition of standard buffer solutions called for in compendial tests and assays, see *Buffer Solutions* in the section *Solutions*. This referenced section is not intended to replace the use of the pH calibration buffers in *Table 2*.

⟨795⟩ PHARMACEUTICAL COMPOUNDING—NONSTERILE PREPARATIONS

INTRODUCTION

The purpose of this chapter is to provide compounders with guidance on applying good compounding practices for the preparation of nonsterile compounded formulations for dispensing and/or administration to humans or animals. Compounding is an integral part of pharmacy practice and is essential to the provision of healthcare. This chapter and applicable monographs on formulation help define good compounding practices. Furthermore, this chapter provides general information to enhance the compounder's ability in the compounding facility to extemporaneously compound preparations that are of acceptable strength, quality, and purity. Pharmacists, other healthcare professionals, and others engaged in the compounding of drug preparations should comply with applicable state and federal compounding laws, regulations, and guidelines.

CATEGORIES OF COMPOUNDING

In the three general categories of nonsterile compounding described in this section, different levels of experience, training, and physical facilities are associated with each category.

Criteria used to determine overall classification include:

- degree of difficulty or complexity of the compounding process
- stability information and warnings
- packaging and storage requirements
- dosage forms
- complexity of calculations
- local versus systemic biological disposition
- level of risk to the compounder
- potential for risk of harm to the patient.

See *Pharmaceutical Compounding—Sterile Preparations* ⟨797⟩ for risk levels associated with sterile preparations. Specialty areas such as radiopharmaceuticals require special training and are beyond the scope of this chapter. Compounders shall acquire and maintain knowledge and skills in all areas (e.g., dosage form, patient population, and medical specialty) for which they compound.

Description of Categories

SIMPLE

Making a preparation that has a *United States Pharmacopeia* (*USP*) compounding monograph or that appears in a peer-reviewed journal article that contains specific quantities of all components, compounding procedure and equipment, and stability data for that formulation with appropriate BUDs; or reconstituting or manipulating commercial products that may require the addition of one or more ingredients as directed by the manufacturer. Examples include *Captopril Oral Solution, Indomethacin Topical Gel,* and *Potassium Bromide Oral Solution, Veterinary.*

MODERATE

Making a preparation that requires special calculations or procedures (such as calibration of dosage unit mold cavities) to determine quantities of components per preparation or per individualized dosage units; or making a preparation for which stability data for that specific formulation are not available. Examples include *Morphine Sulfate Suppositories*, diphenhydramine hydrochloride troches, and mixing two or more manufactured cream products when the stability of the mixture is not known.

COMPLEX

Making a preparation that requires special training, environment, facilities, equipment, and procedures to ensure appropriate therapeutic outcomes. Examples of possible complex preparation types include transdermal dosage forms, modified-release preparations, and some inserts and suppositories for systemic effects.

Change to read:

RESPONSIBILITIES OF THE COMPOUNDER

The compounder is responsible for compounding preparations of acceptable strength, quality, and purity and in accordance with the prescription or medication order. The compounder is also responsible for dispensing the finished preparation, with appropriate packaging and labeling, and in compliance with the requirements established by the applicable state agencies, state boards of pharmacy, federal law, and other regulatory agencies where appropriate. Individuals who are engaged in drug or dietary supplement compounding shall be proficient in compounding and should continually expand their compounding knowledge by participating in seminars and/or studying appropriate literature. They shall be knowledgeable about the contents of this chapter and should be familiar with ⟨797⟩, *Pharmaceutical Dosage Forms* ⟨1151⟩, ●*Pharmaceutical Calculations in Pharmacy Practice* ⟨1160⟩● (CN 1-May-2017), *Quality Assurance in Pharmaceutical Compounding* ⟨1163⟩, ●*Prescription Balances and Volumetric Apparatus Used in Compounding* ⟨1176⟩● (CN 1-May-2017), ⟨1191⟩, *Written Prescription Drug Information—Guidelines* ⟨1265⟩, and all applicable compounding laws, guidelines, and standards.

To ensure the quality of compounded preparations, compounders shall adhere to the following general principles (additional information on these general principles is provided in the sections that follow).

General Principles of Compounding

1. Personnel are appropriately trained and are capable of performing and qualified to perform their assigned duties. Such training should be documented.
2. Compounding ingredients of the appropriate identity, purity, and quality are purchased from reliable sources and are properly stored according to manufacturer specifications or *USP* standards.
3. Bulk component containers are labeled with appropriate Occupational Safety and Health Administration (OSHA) hazard communication labels (see www.OSHA.gov), and Material Safety Data Sheets (MSDSs) are available to compounding personnel for all drugs and chemicals used in compounding.
4. All equipment used in compounding is clean, properly maintained, and used appropriately.
5. The compounding environment is suitable for its intended purpose; and procedures are implemented to prevent cross-contamination, especially when compounding with drugs (e.g., hazardous drugs and known allergens like penicillin) that require special precautions.
6. Only authorized personnel are allowed in the immediate vicinity of the drug compounding operations.
7. There is assurance that processes are always carried out as intended or specified and are reproducible.
8. Compounding conditions and procedures are adequate for preventing errors.
9. All aspects of compounding are appropriately documented.
10. Adequate procedures and records exist for investigating and correcting failures or problems in compounding, testing, or the preparation itself.

COMPOUNDING PROCESS

The compounder is responsible for ensuring that each individual incidence of compounding meets the criteria given in this section (additional information on these criteria is provided in the sections that follow).

Criteria When Compounding Each Drug Preparation

1. The dose, safety, and intended use of the preparation or device has been evaluated for suitability in terms of:
   - the chemical and physical properties of the components
   - dosage form

General Chapters

- therapeutic appropriateness and route of administration, including local and systemic biological disposition
- legal limitations, if any.

2. A Master Formulation Record should be created before compounding a preparation for the first time. This record shall be followed each time that preparation is made. In addition, a Compounding Record should be completed each time a preparation is compounded.
3. Ingredients used in the formulation have their expected identity, quality, and purity. If the formulation is for humans, ingredients are not on a list of federally recognized drugs or specific drug products that have been withdrawn or removed from the market for safety or efficacy reasons (see www.FDA.gov). If the formulation is for food-producing animals, ingredients are not on a list of components prohibited for use in food-producing animals. Certificates of Analysis, when applicable, and MSDSs have been consulted for all ingredients used.
4. Compounding is done in an appropriately clean and sanitized area dedicated to this activity (see the section *Compounding Facilities*).
5. Only one preparation is compounded at one time in a specific workspace.
6. Appropriate compounding equipment has been selected and inspected for cleanliness and correct functioning and is properly used.
7. A reliable BUD is established to ensure that the finished preparation has its accepted potency, purity, quality, and characteristics, at least until the labeled BUD.
8. Personnel engaged in compounding maintain good hand hygiene and wear clean clothing appropriate to the type of compounding performed (e.g., hair bonnets, coats, gowns, gloves, facemasks, shoes, aprons, or other items) as needed for protection of personnel from chemical exposures and for prevention of drug contamination.
9. The preparation is made in accordance with this chapter, other official standards referenced in this chapter, and relevant scientific data and information.
10. Critical processes (including but not limited to weighing, measuring, and mixing) are verified by the compounder to ensure that procedures, when used, will consistently result in the expected qualities in the finished preparation.
11. The final preparation is assessed using factors such as weight, adequacy of mixing, clarity, odor, color, consistency, pH, and analytical testing as appropriate; and this information is recorded on the Compounding Record (see ⟨1163⟩).
12. The preparation is packaged as recommended in the *Packaging and Drug Preparation Containers* section of this chapter.
13. The preparation container is labeled according to all applicable state and federal laws. The labeling shall include the BUD and storage and handling information. The labeling should indicate that "this is a compounded preparation."
14. The Master Formulation Record and the Compounding Record have been reviewed by the compounder to ensure that errors have not occurred in the compounding process and that the preparation is suitable for use.
15. The preparation is delivered to the patient or caregiver with the appropriate consultation.

COMPOUNDING FACILITIES

Compounding facilities shall have an adequate space that is specifically designated for compounding of prescriptions. This space shall provide for the orderly placement of equipment and materials to prevent mixups among ingredients, containers, labels, in-process materials, and finished preparations and is designed, arranged, and used to prevent adventitious cross-contamination. Areas used for sterile preparations shall be separated and distinct from the nonsterile compounding area (see *Pharmaceutical Compounding—Sterile Preparations* ⟨797⟩, *Environmental Quality and Control*).

Potable water shall be supplied for hand and equipment washing. This water meets the standards prescribed in the Environmental Protection Agency's National Primary Drinking Water Regulations (40 CFR Part 141). *Purified Water* (see *Purified Water* monograph) shall be used for compounding nonsterile drug preparations when formulations indicate the inclusion of water. *Purified Water* should be used for rinsing equipment and utensils. In those cases when a water is used to prepare a sterile preparation, follow the appropriate monographs and general chapters (see *Water for Pharmaceutical Purposes* ⟨1231⟩).

The plumbing system shall be free of defects that could contribute to contamination of any compounded preparation. Adequate hand and equipment washing facilities shall be easily accessible to the compounding areas. Such facilities shall include, but are not limited to, hot and cold water, soap or detergent, and an air-drier or single-use towels. The areas used for compounding shall be maintained in clean, orderly, and sanitary conditions and shall be maintained in a good state of repair. Waste shall be held and disposed of in a sanitary and timely manner and in accordance with local, state, and federal guidelines.

The entire compounding and storage area should be well lighted. Heating, ventilation, and air conditioning systems shall be controlled to avoid decomposition and contamination of chemicals (see *Packaging and Storage Requirements* ⟨659⟩ and the manufacturers' labeled storage conditions). Appropriate temperature and humidity monitoring should be maintained as required for certain components and compounded dosage forms. All components, equipment, and containers shall be stored off the floor and in a manner to prevent contamination and permit inspection and cleaning of the compounding and storage area.

Hazardous drugs shall be stored, prepared, and handled by appropriately trained personnel under conditions that protect the healthcare workers and other personnel. The following are references for the safe handling of antineoplastic and hazardous drugs in healthcare settings:

- OSHA Technical Manual—Section VI: Chapter 2, *Controlling Occupational Exposure to Hazardous Drugs*

- NIOSH Alert: *Preventing Occupational Exposure to Antineoplastic and Other Hazardous Drugs in Health Care Settings* [DHHS (NIOSH) Publication No. 2004-165] and updates.

Disposal of all hazardous drug wastes shall comply with all applicable federal and state regulations. All personnel who perform routine custodial waste removal and cleaning activities in storage and preparation areas for hazardous drugs shall be trained in appropriate procedures to protect themselves and prevent contamination.

COMPOUNDING EQUIPMENT

The equipment and utensils used for compounding of a drug preparation shall be of appropriate design and capacity. The equipment shall be of suitable composition that the surfaces that contact components are neither reactive, additive, nor sorptive and therefore will not affect or alter the purity of the compounded preparations. The types and sizes of equipment depend on the dosage forms and the quantities compounded (see ⟨1176⟩ and equipment manufacturers' instruction manuals).

Equipment shall be stored to protect it from contamination and shall be located to facilitate its use, maintenance, and cleaning. Automated, mechanical, electronic, and other types of equipment used in compounding or testing of compounded preparations shall be routinely inspected, calibrated as necessary, and checked to ensure proper performance. Immediately before compounding operations, the equipment shall be inspected by the compounder to determine its suitability for use. After use, the equipment shall be appropriately cleaned.

Extra care should be used when cleaning equipment used in compounding preparations that require special precaution (e.g., antibiotics and cytotoxic and other hazardous materials). When possible, special equipment should be dedicated for such use, or when the same equipment is being used for all drug products, appropriate procedures shall be in place to allow meticulous cleaning of equipment before use with other drugs. If possible, disposable equipment should be used to reduce chances of bioburden and cross-contamination.

COMPONENT SELECTION, HANDLING, AND STORAGE

The following guidelines shall be followed when selecting, handling, and storing components for compounded preparations.

1. A *United States Pharmacopeia* (*USP*), *National Formulary* (*NF*), or *Food Chemicals Codex* (*FCC*) substance is the recommended source of ingredients for compounding all preparations.
2. Compounders shall first attempt to use components manufactured in an FDA-registered facility. When components cannot be obtained from an FDA-registered facility, compounders shall use their professional judgment in selecting an acceptable and reliable source and shall establish purity and safety by reasonable means, which should include Certificate of Analysis, manufacturer reputation, and reliability of source.
3. Official compounded preparations are prepared from ingredients that meet requirements of the compendial monograph for those individual ingredients for which monographs are provided. These preparations may be labeled *USP* or *NF* as appropriate.
4. When components of compendial quality are not obtainable, components of high quality such as those that are chemically pure, analytical reagent grade, or American Chemical Society–certified may be used. However, these components should be used cautiously because the standards for analytical reagents or American Chemical Society–grade materials do not consider whether any impurity present raises human or animal safety concerns.
5. For components in containers that have an expiration date from the manufacturer or distributor, the material may be used in compounding before that expiration date (a) when the material is stored in its original container under conditions to avoid decomposition of the chemicals (see ⟨1191⟩ and ⟨659⟩, unless other conditions are noted on the label), (b) when there is minimal exposure of the remaining material each time material is withdrawn from the container, and (c) when any withdrawals from the container are performed by those trained in the proper handling of the material. If the component has been transferred to a different container, that container shall be identified with the component name, original supplier, lot or control number, transfer date, and expiration date and shall provide integrity that is equivalent to or better than that of the original container.
6. For components that do not have expiration dates assigned by the manufacturer or supplier, the compounder shall label the container with the date of receipt and assign a conservative expiration date, not to exceed three years after receipt, to the component (see *General Notices and Requirements, Preservation, Packaging, Storage, and Labeling, Labeling, Expiration Date and Beyond-Use Date*) based on the nature of the component and its degradation mechanism, the container in which it is packaged, and the storage conditions.
7. If a manufactured drug product is used as the source of active ingredient, the drug product shall be manufactured in an FDA-registered facility, and the manufacturer's product container shall be labeled with a batch control number and expiration date. When compounding with manufactured drug products, the compounder shall consider all ingredients, including excipients, present in the drug product relative to the intended use of the compounded preparation and the effect of manipulating the drug product on the therapeutic appropriateness and stability of the components.
8. If the preparation is intended for use as a dietary or nutritional supplement, then the compounder must adhere to this chapter and must also comply with any federal and state requirements. Generally, dietary supplements are prepared from

ingredients that meet *USP, FCC,* or *NF* standards. Where such standards do not exist, substances may be used in dietary supplements if they have been shown to have acceptable food-grade quality using other suitable procedures.

9. When a component is derived from ruminant animals (e.g., bovine, caprine, ovine), the supplier shall provide written assurance that the component is in compliance with all federal laws governing processing, use, and importation requirements for these materials.
10. When compounding for humans, the compounder should consult the list of components that have been withdrawn or removed from the market for safety or efficacy reasons by FDA (see www.FDA.gov). When compounding for food-producing animals, the compounder should consult the list of components prohibited for use in food-producing animals.
11. All components used in the compounding of preparations must be stored as directed by the manufacturer, or according to *USP, NF,* or *FCC* monograph requirements, in a clean area, and under appropriate temperature and humidity conditions (controlled room temperature, refrigerator, or freezer). All components shall be stored off the floor, handled and stored to prevent contamination, and rotated so that the oldest stock is used first. All containers shall be properly labeled.

STABILITY CRITERIA AND BEYOND-USE DATING

The BUD is the date after which a compounded preparation shall not be used and is determined from the date when the preparation is compounded. Because compounded preparations are intended for administration immediately or following short-term storage, their BUDs are assigned on the basis of criteria different from those applied to assigning expiration dates to manufactured drug products.

BUDs should be assigned conservatively. When assigning a BUD, compounders shall consult and apply drug-specific and general stability documentation and literature when available and should consider:

- the nature of the drug and its degradation mechanism
- the dosage form and its components
- the potential for microbial proliferation in the preparation
- the container in which it is packaged
- the expected storage conditions
- the intended duration of therapy (see *General Notices and Requirements, Preservation, Packaging, Storage, and Labeling, Labeling, Expiration Date and Beyond-Use Date*).

When a manufactured product is used as the source of the API for a nonsterile compounded preparation, the product expiration date cannot be used solely to assign a BUD for the compounded preparation. Instead, the compounder shall refer to the manufacturer for stability information and to the literature for applicable information on stability, compatibility, and degradation of ingredients; shall consider stability factors in ⟨1191⟩; and shall use his or her compounding education and experience. All stability data shall be carefully interpreted in relation to the actual compounded formulation.

At all steps in the compounding, dispensing, and storage process, the compounder shall observe the compounded drug preparation for signs of instability. For more specific details of some of the common physical signs of deterioration (see ⟨1191⟩, *Observing Products for Evidence of Instability*). However, excessive chemical degradation and other drug concentration loss due to reactions may be invisible more often than visible.

General Guidelines for Assigning Beyond-Use Dates

In the absence of stability information that is applicable to a specific drug and preparation, the following table presents maximum BUDs recommended for nonsterile compounded drug preparations that are packaged in tight, light-resistant containers and stored at controlled room temperature, unless otherwise indicated (see ⟨659⟩). Drugs or chemicals known to be labile to decomposition will require shorter BUDs.

BUD by Type of Formulation[a]
For Nonaqueous Formulations—The BUD is not later than the time remaining until the earliest expiration date of any API or 6 months, whichever is earlier.
For Water-Containing Oral Formulations—The BUD is not later than 14 days when stored at controlled cold temperatures.
For Water-Containing Topical/Dermal and Mucosal Liquid and Semisolid Formulations—The BUD is not later than 30 days.

[a] These maximum BUDs are recommended for nonsterile compounded drug preparations in the absence of stability information that is applicable to a specific drug or preparation. The BUD shall not be later than the expiration date on the container of any component.

Susceptible preparations should contain suitable antimicrobial agents to protect against bacteria, yeast, and mold contamination inadvertently introduced during or after the compounding process. When antimicrobial preservatives are contraindicated in such compounded preparations, storage of the preparation at controlled cold temperature is necessary; to ensure proper storage and handling of such compounded preparations by the patient or caregiver, appropriate patient instruction and consultation is essential. Antimicrobial preservatives should not be used as a substitute for good compounding practices.

For information on assigning BUDs when repackaging drug products for dispensing or administration, see *General Notices and Requirements, Preservation, Packaging, Storage, and Labeling, Labeling, Expiration Date and Beyond-Use Date,* and *Packaging and Repackaging—Single-Unit Containers* ⟨1136⟩.

Assurance of sterility in a compounded sterile preparation is mandatory. Compounding and packaging of sterile drugs (including ophthalmic preparations) requires strict adherence to guidelines presented in ⟨797⟩ and in the manufacturers' labeling instructions.

PACKAGING AND DRUG PREPARATION CONTAINERS

The compounder shall ensure that the containers and container closures used in packaging compounded preparations meet *USP* requirements (see ⟨659⟩; *Containers—Glass* ⟨660⟩; *Plastic Packaging Systems and their Materials of Construction* ⟨661⟩; *Plastic Materials of Construction* ⟨661.1⟩; *Plastic Packaging Systems for Pharmaceutical Use* ⟨661.2⟩; *Containers—Performance Testing* ⟨671⟩; ⟨1136⟩); and when available, compounding monographs. Compounders are not expected to perform the tests described in these chapters but should be knowledgeable about the standards described in them. Container suppliers shall supply, upon request, verification of *USP* container compliance. Containers and container closures intended for the compounding of sterile preparations must be handled as described in ⟨797⟩.

The containers and closures shall be made of suitable clean material in order not to alter the quality, strength, or purity of the compounded drug preparation. The container used depends on the physical and chemical properties of the compounded preparation. Container–drug interaction should be considered for substances that have sorptive or leaching properties.

The containers and closures shall be stored off the floor, handled and stored to prevent contamination, and rotated so that the oldest stock is used first. The containers and container closures shall be stored in such a way as to permit inspection and cleaning of the storage area.

COMPOUNDING DOCUMENTATION

Documentation, written or electronic, enables a compounder, whenever necessary, to systematically trace, evaluate, and replicate the steps included throughout the preparation process of a compounded preparation. All compounders who dispense prescriptions must comply with the record-keeping requirements of their state boards of pharmacy. When the compounder compounds a preparation according to the manufacturer's labeling instructions, then further documentation is not required. All other compounded preparations require further documentation as described in this section.

These records should be retained for the same period of time that is required for any prescription under state law. The record may be a copy of the prescription in written or machine-readable form and should include a Master Formulation Record and a Compounding Record.

Master Formulation Record

This record shall include:

- official or assigned name, strength, and dosage form of the preparation
- calculations needed to determine and verify quantities of components and doses of active pharmaceutical ingredients
- description of all ingredients and their quantities
- compatibility and stability information, including references when available
- equipment needed to prepare the preparation, when appropriate
- mixing instructions that should include:
  1. order of mixing
  2. mixing temperatures or other environmental controls
  3. duration of mixing
  4. other factors pertinent to the replication of the preparation as compounded.
- sample labeling information, which shall contain, in addition to legally required information:
  1. generic name and quantity or concentration of each active ingredient
  2. assigned BUD
  3. storage conditions
  4. prescription or control number, whichever is applicable.
- container used in dispensing
- packaging and storage requirements
- description of final preparation
- quality control procedures and expected results.

Compounding Record

The Compounding Record shall contain:

- official or assigned name, strength, and dosage of the preparation
- Master Formulation Record reference for the preparation
- names and quantities of all components

- sources, lot numbers, and expiration dates of components
- total quantity compounded
- name of the person who prepared the preparation, name of the person who performed the quality control procedures, and name of the compounder who approved the preparation
- date of preparation
- assigned control or prescription number
- assigned BUD
- duplicate label as described in the Master Formulation Record
- description of final preparation
- results of quality control procedures (e.g., weight range of filled capsules, pH of aqueous liquids)
- documentation of any quality control issues and any adverse reactions or preparation problems reported by the patient or caregiver.

Standard Operating Procedures

All significant procedures performed in the compounding area should be covered by written standard operating procedures (SOPs). Procedures should be developed for the facility, equipment, personnel, preparation, packaging, and storage of compounded preparations to ensure accountability, accuracy, quality, safety, and uniformity in compounding. Implementing SOPs establishes procedural consistency and also provides a reference for orientation and training of personnel.

Material Safety Data Sheets File

MSDSs shall be readily accessible to all employees working with drug substances or bulk chemicals located on the compounding facility premises. Employees should be instructed on how to retrieve and interpret needed information.

QUALITY CONTROL

The safety, quality, and performance of compounded preparations depend on correct ingredients and calculations, accurate and precise measurements, appropriate formulation conditions and procedures, and prudent pharmaceutical judgment. As a final check, the compounder shall review each procedure in the compounding process. To ensure accuracy and completeness, the compounder shall observe the finished preparation to ensure that it appears as expected and shall investigate any discrepancies and take appropriate corrective action before the prescription is dispensed to the patient.

Compounding Controls

1. The Master Formulation Record, the Compounding Record, and associated written procedures shall be followed in execution of the compounding process. Any deviation in procedures shall be documented.
2. The compounder shall check and recheck each procedure at each stage of the process. If possible, a trained second person should verify each critical step in the compounding process.
3. The compounder shall have established written procedures that describe the tests or examinations conducted on the compounded preparation (e.g., the degree of weight variation among capsules) to ensure their uniformity and integrity.
4. Appropriate control procedures shall be established to monitor the output and to verify the performance of compounding processes and equipment that may be responsible for causing variability in the final compounded preparations.
5. For further guidance on recommended quality control procedures, see ⟨1163⟩.

PATIENT COUNSELING

At the time of dispensing the prescription, the patient or the patient's agent shall be counseled about proper use, storage, handling, and disposal of the compounded preparation. The patient or the patient's agent shall also be instructed to report any adverse event and to observe and report to the compounder any changes in the physical characteristics of the compounded preparation (see ⟨1191⟩, *Responsibility of Pharmacists*). The compounder shall investigate and document any reported problem with a compounded preparation and shall take corrective action.

TRAINING

All personnel involved in the compounding, evaluation, packaging, and dispensing of compounded preparations shall be properly trained for the type of compounding conducted. It is the responsibility of the compounder to ensure that a training program has been implemented and that it is ongoing. Compounding personnel should be evaluated at least annually. Steps in the training procedure include the following:

- All employees involved in pharmaceutical compounding shall read and become familiar with this chapter. They should also be familiar with the contents of the *USP Pharmacists' Pharmacopeia* and other relevant publications, including how to read and interpret MSDSs.
- All employees shall read and become familiar with each of the procedures related to compounding, including those involving the facility, equipment, personnel, actual compounding, evaluation, packaging, storage, and dispensing.
- All personnel who compound hazardous drugs shall be fully trained in the storage, handling, and disposal of these drugs. This training shall occur before preparing or handling hazardous drugs. For information on training for personnel who compound hazardous drugs, see the references in *Compounding Facilities* earlier in this chapter.
- All training activities shall be documented. The compounder shall meet with employees to review their work and answer any questions the employees may have concerning compounding procedures.
- The compounder shall demonstrate the procedures for the employee and shall observe and guide the employee throughout the training process. The employee will then repeat the procedure without any assistance from, but under the direct supervision of, the compounder.
- When the employee has demonstrated to the compounder a verbal and functional knowledge of the procedure, then and only then will the employee be permitted to perform the procedure without direct supervision. However, the compounder should be physically present and shall approve all ingredients and their quantities and the final preparation.
- When the compounder is satisfied with the employee's knowledge and proficiency, the compounder will sign the documentation records to show that the employee was appropriately trained.
- The compounder shall continually monitor the work of the employee and ensure that the employee's calculations and work are accurate and adequately performed.
- The compounder is solely responsible for the finished preparation.

General Chapters

COMPOUNDING FOR ANIMAL PATIENTS

A compounder's responsibility for providing patients with high-quality compounded preparations extends beyond the human species. All portions of this chapter apply to compounded preparations formulated for animal patients. Intended use of any animal patient (e.g., companion, performance, food) shall be determined before compounding for that patient.

Because humans can consume animal patients as food, care must be taken to prevent drug residues from entering the human food chain when compounded preparations are used in animal patients. For this reason, all compounders preparing formulations for animals shall possess a functional knowledge of drug regulation and disposition in animal patients. Veterinarians are required by law to provide food-producing animal caregivers with an accurate length of time to withhold treated animal tissues (e.g., meat, milk, eggs) from the human food supply. This length of time is referred to as a withdrawal time (WDT) and must also, by law, be included on the dispensing label of every prescription prepared for a food-producing species.

Drug use in any performance animal is strictly regulated by federal and state governments, in addition to the governing bodies of each of the specific disciplines. Penalties for violation of these rules may be severe for all contributing to the violation, including the veterinarian, pharmacist, and caregiver.

The pharmacist shall be knowledgeable about the individual species' limitations in physiology and metabolic capacity that can result in toxicity when certain drugs or excipients are used in compounded preparations. For this reason, compounders making preparations for animals should use, when possible, formulations specifically developed for animal patients. If such formulations are not available, the compounder shall conduct a literature review to determine whether a specific component of the formula is toxic to the target species. Extrapolating compounding formulations intended for use in humans may not be appropriate for animal species and may contribute to negative outcomes.

Veterinarians and pharmacists making preparations for animal patients should be familiar with all state and federal regulations regarding drug use in animals, including but not limited to the Food, Drug, and Cosmetic Act; the Animal Drug Amendment; the Animal Medicinal Drug Use Clarification Act; and FDA's Compliance Policy Guideline for Compounding of Drugs for Use in Animal Patients.

GLOSSARY

Active Pharmaceutical Ingredient (API): Any substance or mixture of substances intended to be used in the compounding of a drug preparation, thereby becoming the active ingredient in that preparation and furnishing pharmacological activity or other direct effect in the diagnosis, cure, mitigation, treatment, or prevention of disease in humans and animals or affecting the structure and function of the body.

Added Substances: Ingredients that are necessary to compound a preparation but are not intended or expected to cause a pharmacologic response if administered alone in the amount or concentration contained in a single dose of the compounded preparation. The term is used synonymously with the terms *inactive ingredients, excipients,* and *pharmaceutical ingredients.*

Beyond-Use Date (BUD): The date after which a compounded preparation shall not be used; determined from the date the preparation is compounded.

Component: Any ingredient used in the compounding of a drug preparation, including any active ingredient or added substance that is used in its preparation.

Compounder: A professional authorized by the appropriate jurisdiction to perform compounding pursuant to a prescription or medication order by a licensed prescriber.

Compounding: The preparation, mixing, assembling, altering, packaging, and labeling of a drug, drug-delivery device, or device in accordance with a licensed practitioner's prescription, medication order, or initiative based on the practitioner/patient/pharmacist/compounder relationship in the course of professional practice. Compounding includes the following:

- Preparation of drug dosage forms for both human and animal patients
- Preparation of drugs or devices in anticipation of prescription drug orders based on routine, regularly observed prescribing patterns
- Reconstitution or manipulation of commercial products that may require the addition of one or more ingredients
- Preparation of drugs or devices for the purposes of, or as an incident to, research (clinical or academic), teaching, or chemical analysis
- Preparation of drugs and devices for prescriber's office use where permitted by federal and state law.

Hazardous Drug: Any drug identified by at least one of the following six criteria:

- Carcinogenicity
- Teratogenicity or developmental toxicity
- Reproductive toxicity in humans
- Organ toxicity at low doses in humans or animals
- Genotoxicity
- New drugs that mimic existing hazardous drugs in structure or toxicity [for examples see current National Institute for Occupational Safety and Health (NIOSH) publications].

Manufacturing: The production, propagation, conversion, or processing of a drug or device, either directly or indirectly, by extraction of the drug from substances of natural origin or by means of chemical or biological synthesis. Manufacturing may also include any packaging or repackaging of the substance(s) or labeling or relabeling of containers for resale by pharmacies, practitioners, or other persons.

Preparation: For the purposes of this chapter, a compounded drug dosage form or dietary supplement or a device to which a compounder has introduced a drug. This term will be used to describe compounded formulations; the term *product* will be used to describe manufactured pharmaceutical dosage forms. (For the definitions of *official substance* and *official products*, see *General Notices and Requirements*.)

Stability: The extent to which a preparation retains, within specified limits and throughout its period of storage and use, the same properties and characteristics that it possessed at the time of compounding (see *Stability Considerations in Dispensing Practice* ⟨1191⟩, the table *Criteria for Acceptable Levels of Stability*).

Vehicle: A component for internal or external use that is used as a carrier or diluent in which liquids, semisolids, or solids are dissolved or suspended. Examples include, but are not limited to, water, syrups, elixirs, oleaginous liquids, solid and semisolid carriers, and proprietary products.

⟨797⟩ PHARMACEUTICAL COMPOUNDING—STERILE PREPARATIONS

INTRODUCTION

The objective of this chapter is to describe conditions and practices to prevent harm, including death, to patients that could result from (1) microbial contamination (nonsterility), (2) excessive bacterial endotoxins, (3) variability in the intended strength of correct ingredients that exceeds either monograph limits for official articles (see "official" and "article" in the *General Notices and Requirements*) or 10% for nonofficial articles, (4) unintended chemical and physical contaminants, and (5) ingredients of inappropriate quality in compounded sterile preparations (CSPs). Contaminated CSPs are potentially most hazardous to patients when administered into body cavities, central nervous and vascular systems, eyes, and joints, and when used as baths for live organs and tissues. When CSPs contain excessive bacterial endotoxins (see *Bacterial Endotoxins Test* ⟨85⟩), they are potentially most hazardous to patients when administered into the central nervous system.

Despite the extensive attention in this chapter to the provision, maintenance, and evaluation of air quality, the avoidance of direct or physical contact contamination is paramount. It is generally acknowledged that direct or physical contact of critical sites of CSPs with contaminants, especially microbial sources, poses the greatest probability of risk to patients. Therefore, compounding personnel must be meticulously conscientious in precluding contact contamination of CSPs both within and outside ISO Class 5 (see *Table 1*) areas.

To achieve the above five conditions and practices, this chapter provides minimum practice and quality standards for CSPs of drugs and nutrients based on current scientific information and best sterile compounding practices. The use of technologies, techniques, materials, and procedures other than those described in this chapter is not prohibited so long as they have been proven to be equivalent or superior with statistical significance to those described herein. The standards in this chapter do not pertain to the *clinical administration* of CSPs to patients via application, implantation, infusion, inhalation, injection, insertion, instillation, and irrigation, which are the routes of administration. Four specific categories of CSPs are described in this

chapter: low-risk level, medium-risk level, and high-risk level, and immediate use. Sterile compounding differs from nonsterile compounding (see *Pharmaceutical Compounding—Nonsterile Preparations* ⟨795⟩) primarily by requiring the maintenance of sterility when compounding exclusively with sterile ingredients and components (i.e., with immediate-use CSPs, low-risk level CSPs, and medium-risk level CSPs) and the achievement of sterility when compounding with nonsterile ingredients and components (i.e., with high-risk level CSPs). Some differences between standards for sterile compounding in this chapter and those for nonsterile compounding in *Pharmaceutical Compounding—Nonsterile Preparations* ⟨795⟩ include, but are not limited to, ISO-classified air environments (see *Table 1*); personnel garbing and gloving; personnel training and testing in principles and practices of aseptic manipulations and sterilization; environmental quality specifications and monitoring; and disinfection of gloves and surfaces of ISO Class 5 (see *Table 1*) sources.

Table 1. ISO Classification of Particulate Matter in Room Air (limits are in particles of 0.5 μm and larger per cubic meter [current ISO] and cubic feet [former Federal Standard No. 209E, FS 209E])*

Class Name		Particle Count	
ISO Class	**U.S. FS 209E**	**ISO, m^3**	**FS 209E, ft^3**
3	Class 1	35.2	1
4	Class 10	352	10
5	Class 100	3,520	100
6	Class 1,000	35,200	1,000
7	Class 10,000	352,000	10,000
8	Class 100,000	3,520,000	100,000

* Adapted from former Federal Standard No. 209E, General Services Administration, Washington, DC, 20407 (September 11, 1992) and ISO 14644-1:1999, Cleanrooms and associated controlled environments—Part 1: Classification of air cleanliness. For example, 3,520 particles of 0.5 μm per m^3 or larger (ISO Class 5) is equivalent to 100 particles per ft^3 (Class 100) (1 m^3 = 35.2 ft^3).

The standards in this chapter are intended to apply to all persons who prepare CSPs and all places where CSPs are prepared (e.g., hospitals and other healthcare institutions, patient treatment clinics, pharmacies, physicians' practice facilities, and other locations and facilities in which CSPs are prepared, stored, and transported). Persons who perform sterile compounding include pharmacists, nurses, pharmacy technicians, and physicians. These terms recognize that most sterile compounding is performed by or under the supervision of pharmacists in pharmacies and also that this chapter applies to all healthcare personnel who prepare, store, and transport CSPs. For the purposes of this chapter, CSPs include any of the following:

(1) Compounded biologics, diagnostics, drugs, nutrients, and radiopharmaceuticals, including but not limited to the following dosage forms that must be sterile when they are administered to patients: aqueous bronchial and nasal inhalations, baths and soaks for live organs and tissues, injections (e.g., colloidal dispersions, emulsions, solutions, suspensions), irrigations for wounds and body cavities, ophthalmic drops and ointments, and tissue implants.

(2) Manufactured sterile products that are either prepared strictly according to the instructions appearing in manufacturers' approved labeling (product package inserts) or prepared differently than published in such labeling. [Note—The FDA states that "Compounding does not include mixing, reconstituting, or similar acts that are performed in accordance with the directions contained in approved labeling provided by the product's manufacturer and other manufacturer directions consistent with that labeling" [21 USC 321 (k) and (m)]. However, the FDA-approved labeling (product package insert) rarely describes environmental quality (e.g., ISO Class air designation, exposure durations to non-ISO classified air, personnel garbing and gloving, and other aseptic precautions by which sterile products are to be prepared for administration). Beyond-use exposure and storage dates or times (see *General Notices and Requirements* and *Pharmaceutical Compounding—Nonsterile Preparations* ⟨795⟩) for sterile products that have been either opened or prepared for administration are not specified in all package inserts for all sterile products. Furthermore, when such durations are specified, they may refer to chemical stability and not necessarily to microbiological purity or safety.]

ORGANIZATION OF THIS CHAPTER

The sections in this chapter are organized to facilitate the practitioner's understanding of the fundamental accuracy and quality practices for preparing CSPs. They provide a foundation for the development and implementation of essential procedures for the safe preparation of low-risk, medium-risk, and high-risk level CSPs and immediate-use CSPs, which are classified according to the potential for microbial, chemical, and physical contamination. The chapter is divided into the following main sections:

- Responsibility of Compounding Personnel
- CSP Microbial Contamination Risk Levels
- Personnel Training and Evaluation in Aseptic Manipulation Skills
- Immediate-Use CSPs
- Single-Dose and Multiple-Dose Containers
- Hazardous Drugs as CSPs
- Radiopharmaceuticals as CSPs
- Allergen Extracts as CSPs

- Verification of Compounding Accuracy and Sterility
- Environmental Quality and Control
- Suggested Standard Operating Procedures (SOPs)
- Elements of Quality Control
- Verification of Automated Compounding Devices (ACDs) for Parenteral Nutrition Compounding
- Finished Preparation Release Checks and Tests
- Storage and Beyond-Use Dating
- Maintaining Sterility, Purity, and Stability of Dispensed and Distributed CSPs
- Patient or Caregiver Training
- Patient Monitoring and Adverse Events Reporting
- Quality Assurance (QA) Program
- Abbreviations and Acronyms
- Glossary
- Appendices I–V

The requirements and recommendations in this chapter are summarized in *Appendix I*. A list of abbreviations and acronyms is included at the end of the main text, before the *Appendices*.

All personnel who prepare CSPs shall be responsible for understanding these fundamental practices and precautions, for developing and implementing appropriate procedures, and for continually evaluating these procedures and the quality of final CSPs to prevent harm.

RESPONSIBILITY OF COMPOUNDING PERSONNEL

Compounding personnel are responsible for ensuring that CSPs are accurately identified, measured, diluted, and mixed and are correctly purified, sterilized, packaged, sealed, labeled, stored, dispensed, and distributed. These performance responsibilities include maintaining appropriate cleanliness conditions and providing labeling and supplementary instructions for the proper clinical administration of CSPs.

Compounding supervisors shall ensure, through either direct measurement or appropriate information sources, that specific CSPs maintain their labeled strength within monograph limits for *USP* articles, or within 10% if not specified, until their BUDs. All CSPs are prepared in a manner that maintains sterility and minimizes the introduction of particulate matter.

A written quality assurance procedure includes the following in-process checks that are applied, as appropriate, to specific CSPs: accuracy and precision of measuring and weighing; the requirement for sterility; methods of sterilization and purification; safe limits and ranges for strength of ingredients, bacterial endotoxins, and particulate matter; pH; labeling accuracy and completeness; BUD assignment; and packaging and storage requirements. The dispenser shall, when appropriate and practicable, obtain and evaluate results of testing for identity, strength, purity, and sterility before a CSP is dispensed. Qualified licensed healthcare professionals who supervise compounding and dispensing of CSPs shall ensure that the following objectives are achieved:

1. Compounding personnel are adequately skilled, educated, instructed, and trained to correctly perform and document the following activities in their sterile compounding duties:
   a. perform antiseptic hand cleansing and disinfection of nonsterile compounding surfaces;
   b. select and appropriately don protective garb;
   c. maintain or achieve sterility of CSPs in ISO Class 5 (see *Table 1*) PEC devices and protect personnel and compounding environments from contamination by radioactive, cytotoxic, and chemotoxic drugs (see *Hazardous Drugs as CSPs* and *Radiopharmaceuticals as CSPs*);
   d. identify, weigh, and measure ingredients; and
   e. manipulate sterile products aseptically, sterilize high-risk level CSPs, and label and quality inspect CSPs.
2. Ingredients have their correct identity, quality, and purity.
3. Opened or partially used packages of ingredients for subsequent use in CSPs are properly stored under restricted access conditions in the compounding facility. Such packages cannot be used when visual inspection detects unauthorized breaks in the container, closure, and seal; when the contents do not possess the expected appearance, aroma, and texture; when the contents do not pass identification tests specified by the compounding facility; and when either the BUD or expiration date has been exceeded.
4. Water-containing CSPs that are nonsterile during any phase of the compounding procedure are sterilized within 6 hours after completing the preparation in order to minimize the generation of bacterial endotoxins.
5. Sterilization methods achieve sterility of CSPs while maintaining the labeled strength of active ingredients and the physical integrity of packaging.
6. Measuring, mixing, sterilizing, and purifying devices are clean, appropriately accurate, and effective for their intended use.
7. Potential harm from added substances and differences in rate and extent of bioavailability of active ingredients for other than oral route of administration are carefully evaluated before such CSPs are dispensed and administered.
8. Packaging selected for CSPs is appropriate to preserve the sterility and strength until the BUD.

9. While being used, the compounding environment maintains the sterility or the presterilization purity, whichever is appropriate, of the CSP.
10. Labels on CSPs list the names and amounts or concentrations of active ingredients, and the labels or labeling of injections (see *Preservation, Packaging, Storage, and Labeling* in the *General Notices and Requirements*) list the names and amounts or concentrations of all ingredients (see *Labeling* ⟨7⟩). Before being dispensed or administered, the clarity of solutions is visually confirmed; also, the identity and amounts of ingredients, procedures to prepare and sterilize CSPs, and specific release criteria are reviewed to ensure their accuracy and completeness.
11. BUDs are assigned on the basis of direct testing or extrapolation from reliable literature sources and other documentation (see *Stability Criteria and Beyond-Use Dating* under *Pharmaceutical Compounding—Nonsterile Preparations* ⟨795⟩).
12. Procedures for measuring, mixing, dilution, purification, sterilization, packaging, and labeling conform to the correct sequence and quality established for the specified CSP.
13. Deficiencies in compounding, labeling, packaging, and quality testing and inspection can be rapidly identified and corrected.
14. When time and personnel availability so permit, compounding manipulations and procedures are separated from postcompounding quality inspection and review before CSPs are dispensed.

This chapter emphasizes the need to maintain high standards for the quality and control of processes, components, and environments and for the skill and knowledge of personnel who prepare CSPs. The rigor of in-process quality-control checks and of postcompounding quality inspection and testing increases with the potential hazard of the route of administration. For example, nonsterility, excessive bacterial endotoxin contamination, large errors in strength of correct ingredients, and incorrect ingredients in CSPs are potentially more dangerous to patients when the CSPs are administered into the vascular and central nervous systems than when administered by most other routes.

CSP MICROBIAL CONTAMINATION RISK LEVELS

The three contamination categories for CSPs described in this section are assigned primarily according to the potential for microbial contamination during the compounding of low-risk level CSPs and medium-risk level CSPs or the potential for not sterilizing high-risk level CSPs, any of which would subject patients to risk of harm, including death. High-risk level CSPs must be sterilized before being administered to patients. The appropriate risk level—low, medium, or high—is assigned according to the corresponding probability of contaminating a CSP with (1) microbial contamination (e.g., microbial organisms, spores, endotoxins) and (2) chemical and physical contamination (e.g., foreign chemicals, physical matter). Potential sources of contamination include, but are not limited to, solid and liquid matter from compounding personnel and objects; nonsterile components employed and incorporated before terminal sterilization; inappropriate conditions within the restricted compounding environment; prolonged presterilization procedures with aqueous preparations; and nonsterile dosage forms used to compound CSPs.

The characteristics described below for low-, medium-, and high-risk level CSPs are intended as a guide to the breadth and depth of care necessary in compounding, but they are neither exhaustive nor prescriptive. The licensed healthcare professionals who supervise compounding are responsible for determining the procedural and environmental quality practices and attributes that are necessary for the risk level they assign to specific CSPs.

These risk levels apply to the quality of CSPs immediately after the final aseptic mixing or filling or immediately after the final sterilization, unless precluded by the specific characteristics of the preparation. Upon subsequent storage and shipping of freshly finished CSPs, an increase in the risks of chemical degradation of ingredients, contamination from physical damage to packaging, and permeability of plastic and elastomeric packaging is expected. In such cases, compounding personnel are responsible for considering the potential additional risks to the integrity of CSPs when assigning BUDs. The pre-administration storage duration and temperature limits specified in the following subsections apply in the absence of direct sterility testing results that justify different limits for specific CSPs.

Low-Risk Level CSPs

CSPs compounded under all the following conditions are at a low risk of contamination.

Low-Risk Conditions—

1. The CSPs are compounded with aseptic manipulations entirely within ISO Class 5 (see *Table 1*) or better air quality using only sterile ingredients, products, components, and devices.
2. The compounding involves only transfer, measuring,and mixing manipulations using not more than threecommercially manufactured packages of sterile products and not more than two entries into any one sterile container or package (e.g., bag, vial) of sterile product or administration container/device to prepare the CSP.
3. Manipulations are limited to aseptically opening ampuls, penetrating disinfected stoppers on vials with sterile needles and syringes, and transferring sterile liquids in sterile syringes to sterile administration devices, package containers of other sterile products, and containers for storage and dispensing.
4. For a low-risk level preparation, in the absence of passing a sterility test (see *Sterility Tests* ⟨71⟩), the storage periods cannot exceed the following time periods: before administration, the CSPs are properly stored and are exposed for not more

than 48 hours at controlled room temperature (see *General Notices and Requirements*), for not more than 14 days at a cold temperature (see *General Notices and Requirements*), and for 45 days in solid frozen state between −25° and −10°.

Examples of Low-Risk Compounding—

1. Single-volume transfers of sterile dosage forms from ampuls, bottles, bags, and vials using sterile syringes with sterile needles, other administration devices, and other sterile containers. The solution content of ampuls should be passed through a sterile filter to remove any particles.
2. Simple aseptic measuring and transferring with notmore than three packages of manufactured sterile products,includingan infusion or diluent solution to compound drug admixturesand nutritional solutions.

Low-Risk Level CSPs with 12-Hour or Less BUD—If the PEC is a CAI or CACI that does not meet the requirements described in *Placement of Primary Engineering Controls* or is a laminar airflow workbench (LAFW) or a biological safety cabinet (BSC) that cannot be located within an ISO Class 7 (see *Table 1*) buffer area, then only low-risk level nonhazardous and radiopharmaceutical CSPs pursuant to a physician's order for a specific patient may be prepared, and administration of such CSPs shall commence within 12 hours of preparation or as recommended in the manufacturers' package insert, whichever is less. Low-risk level CSPs with a 12-hour or less BUD shall meet all of the following four criteria:

1. PECs (LAFWs, BSCs, CAIs, CACIs,) shall be certified and maintain ISO Class 5 (see *Table 1*) as described in *Facility Design and Environmental Controls* for exposure of critical sites and shall be in a segregated compounding area restricted to sterile compounding activities that minimize the risk of CSP contamination.
2. The segregated compounding area shall not be in a location that has unsealed windows or doors that connect to the outdoors or high traffic flow, or that is adjacent to construction sites, warehouses, or food preparation. Note that this list is not intended to be all inclusive.
3. Personnel shall follow the procedures described in *Personnel Cleansing and Garbing* and *Additional Personnel Requirements* prior to compounding. Sinks should not be located adjacent to the ISO Class 5 (see *Table 1*) PEC. Sinks should be separated from the immediate area of the ISO Class 5 (see *Table 1*) PEC device.
4. The specifications in *Cleaning and Disinfecting the Sterile Compounding Areas, Personnel Training and Competency Evaluation of Garbing, Aseptic Work Practices and Cleaning/Disinfection Procedures,* and *Viable and Nonviable Environmental Sampling (ES) Testing* shall be followed as described in the chapter.

Compounding personnel must recognize that the absence of an ISO Class 7 (see *Table 1*) buffer area environment in a general uncontrolled environment increases the potential of microbial contamination, and administration durations of microbially contaminated CSPs exceeding a few hours increase the potential for clinically significant microbial colonization, and thus for patient harm, especially in critically ill or immunocompromised patients.

Quality Assurance—Quality assurance practices include, but are not limited to the following:

1. Routine disinfection and air quality testing of the direct compounding environment to minimize microbial surface contamination and maintain ISO Class 5 (see *Table 1*) air quality.
2. Visual confirmation that compounding personnel are properly donning and wearing appropriate items and types of protective garments, including eye protection and face masks.
3. Review of all orders and packages of ingredients to ensure that the correct identity and amounts of ingredients were compounded.
4. Visual inspection of CSPs to ensure the absence of particulate matter in solutions, the absence of leakage from vials and bags, and the accuracy and thoroughness of labeling.

Media-Fill Test Procedure—This test or an equivalent test is performed at least annually by each person authorized to compound in a low-risk level environment under conditions that closely simulate the most challenging or stressful conditions encountered during compounding of low-risk level CSPs. Once begun, this test is completed without interruption. *Example of test procedure:* within an ISO Class 5 (see *Table 1*) air quality environment, three sets of four 5-mL aliquots of sterile Soybean–Casein Digest Medium (also known as trypticase soy broth or trypticase soy agar [TSA]) are transferred with the same sterile 10-mL syringe and vented needle combination into separate sealed, empty, sterile 30-mL clear vials (i.e., four 5-mL aliquots into each of three 30-mL vials). Sterile adhesive seals are aseptically affixed to the rubber closures on the three filled vials, then the vials are incubated at 20° to 25° or at 30° to 35° for a minimum of 14 days. If two temperatures are used for incubation of media-filled samples, then these filled containers should be incubated for at least 7 days at each temperature (see *Microbiological Control and Monitoring of Aseptic Processing Environments* ⟨1116⟩). Inspect for microbial growth over 14 days as described in *Personnel Training and Competency Evaluation of Garbing, Aseptic Work Practices and Cleaning/Disinfection Procedures*.

Medium-Risk Level CSPs

When CSPs are compounded aseptically under *Low-Risk Conditions* and one or more of the following conditions exists, such CSPs are at a medium risk of contamination.

Medium-Risk Conditions—

1. Multiple individual or small doses of sterile products are combined or pooled to prepare a CSP that will be administered either to multiple patients or to one patient on multiple occasions.
2. The compounding process includes complex aseptic manipulations other than the single-volume transfer.
3. The compounding process requires unusually long duration, such as that required to complete dissolution or homogeneous mixing.

General Chapters

4. For a medium-risk preparation, in the absence of passing a sterility test (see *Sterility Tests* ⟨71⟩), the storage periods cannot exceed the following time periods: before administration, the CSPs are properly stored and are exposed for not more than 30 hours at controlled room temperature (see *General Notices and Requirements*), for not more than 9 days at a cold temperature (see *General Notices and Requirements*), and for 45 days in solid frozen state between −25° and −10°.

Examples of Medium-Risk Compounding—

1. Compounding of total parenteral nutrition fluids using manual or automated devices during which there are multiple injections, detachments, and attachments of nutrient source products to the device or machine to deliver all nutritional components to a final sterile container.
2. Filling of reservoirs of injection and infusion devices with more than three sterile drug products and evacuation of air from those reservoirs before the filled device is dispensed.
3. Transfer of volumes from multiple ampuls or vials into one or more final sterile containers.

Quality Assurance—Quality assurance procedures for medium-risk level CSPs include all those for low-risk level CSPs, as well as a more challenging media-fill test passed annually or more frequently.

Media-Fill Test Procedure—This test or an equivalent test is performed at least annually under conditions that closely simulate the most challenging or stressful conditions encountered during compounding. Once begun, this test is completed without interruption. *Example of test procedure:* within an ISO Class 5 (see *Table 1*) air quality environment, six 100-mL aliquots of sterile Soybean–Casein Digest Medium are aseptically transferred by gravity through separate tubing sets into separate evacuated sterile containers. The six containers are then arranged as three pairs, and a sterile 10-mL syringe and 18-gauge needle combination is used to exchange two 5-mL aliquots of medium from one container to the other container in the pair. For example, after a 5-mL aliquot from the first container is added to the second container in the pair, the second container is agitated for 10 seconds, then a 5-mL aliquot is removed and returned to the first container in the pair. The first container is then agitated for 10 seconds, and the next 5-mL aliquot is transferred from it back to the second container in the pair. Following the two 5-mL aliquot exchanges in each pair of containers, a 5-mL aliquot of medium from each container is aseptically injected into a sealed, empty, sterile 10-mL clear vial, using a sterile 10-mL syringe and vented needle. Sterile adhesive seals are aseptically affixed to the rubber closures on the three filled vials, then the vials are incubated at 20° to 25° or at 30° to 35° for a minimum of 14 days. If two temperatures are used for incubation of media-filled samples, then these filled containers should be incubated for at least 7 days at each temperature (see *Microbiological Control and Monitoring of Aseptic Processing Environments* ⟨1116⟩). Inspect for microbial growth over 14 days as described in *Personnel Training and Competency Evaluation of Garbing, Aseptic Work Practices and Cleaning/Disinfection Procedures.*

General Chapters

High-Risk Level CSPs

CSPs compounded under any of the following conditions are either contaminated or at a high risk to become contaminated.

High-Risk Conditions—

1. Nonsterile ingredients, including manufactured products not intended for sterile routes of administration (e.g., oral), are incorporated or a nonsterile device is employed before terminal sterilization.
2. Any of the following are exposed to air quality worse than ISO Class 5 (see *Table 1*) for more than 1 hour (see *Immediate-Use CSPs*):
   - sterile contents of commercially manufactured products,
   - CSPs that lack effective antimicrobial preservatives, and
   - sterile surfaces of devices and containers for the preparation, transfer, sterilization, and packaging of CSPs.
3. Compounding personnel are improperly garbed and gloved (see *Personnel Cleansing and Use of Barrier Protective Equipment*).
4. Nonsterile water-containing preparations are stored for more than 6 hours before being sterilized.
5. It is assumed, and not verified by examination of labeling and documentation from suppliers or by direct determination, that the chemical purity and content strength of ingredients meet their original or compendial specifications in unopened or in opened packages of bulk ingredients (see *Ingredient Selection* under *Pharmaceutical Compounding—Nonsterile Preparations* ⟨795⟩).

For a sterilized high-risk level preparation, in the absence of passing a sterility test, the storage periods cannot exceed the following time periods: before administration, the CSPs are properly stored and are exposed for not more than 24 hours at controlled room temperature (see *General Notices and Requirements*), for not more than 3 days at a cold temperature (see *General Notices and Requirements*), and for 45 days in solid frozen state between −25° and −10°. [NOTE—Sterility tests for autoclaved CSPs are not required unless they are prepared in batches of more than 25 units.]

All nonsterile measuring, mixing, and purifying devices are rinsed thoroughly with sterile, pyrogen-free water, and then thoroughly drained or dried immediately before use for high-risk compounding. All high-risk level CSP solutions subjected to terminal sterilization are prefiltered by passing through a filter with a nominal pore size not larger than 1.2 µm preceding or during filling into their final containers to remove particulate matter. Sterilization of high-risk level CSPs by filtration shall be performed with a sterile 0.2-µm or 0.22-µm nominal pore size filter entirely within an ISO Class 5 (see *Table 1*) or superior air quality environment.

Examples of High-Risk Conditions—

1. Dissolving nonsterile bulk drug and nutrient powders to make solutions that will be terminally sterilized.

2. Exposing the sterile ingredients and components used to prepare and package CSPs to room air quality worse than ISO Class 5 (see *Table 1*) for more than 1 hour (see *Immediate-Use CSPs*).
3. Measuring and mixing sterile ingredients in nonsterile devices before sterilization is performed.
4. Assuming, without appropriate evidence or direct determination, that packages of bulk ingredients contain at least 95% by weight of their active chemical moiety and have not been contaminated or adulterated between uses.

Quality Assurance—Quality assurance procedures for high-risk level CSPs include all those for low-risk level CSPs. In addition, a media-fill test that represents high-risk level compounding is performed semiannually by each person authorized to compound high-risk level CSPs.

Media-Fill Test Procedure for CSPs Sterilized by Filtration—This test or an equivalent test is performed under conditions that closely simulate the most challenging or stressful conditions encountered when compounding high-risk level CSPs. Once begun, this test is completed without interruption. *Example of test procedure* (in the following sequence):

1. Dissolve 3 g of nonsterile commercially available Soybean–Casein Digest Medium in 100 mL of nonbacteriostatic water to make a 3% nonsterile solution.
2. Draw 25 mL of the medium into each of three 30-mL sterile syringes. Transfer 5 mL from each syringe into separate sterile 10-mL vials. These vials are the positive controls to generate exponential microbial growth, which is indicated by visible turbidity upon incubation.
3. Under aseptic conditions and using aseptic techniques, affix a sterile 0.2-µm or 0.22-µm nominal pore size filter unit and a 20-gauge needle to each syringe. Inject the next 10 mL from each syringe into three separate 10-mL sterile vials. Repeat the process for three more vials. Label all vials, affix sterile adhesive seals to the closure of the nine vials, and incubate them at 20° to 25° or at 30° to 35° for a minimum of 14 days. If two temperatures are used for incubation of media-filled samples, then these filled containers should be incubated for at least 7 days at each temperature (see *Microbiological Control and Monitoring of Aseptic Processing Environments* ⟨1116⟩). Inspect for microbial growth over 14 days as described in *Personnel Training and Competency Evaluation of Garbing, Aseptic Work Practices and Cleaning/Disinfection Procedures*.

General Chapters

PERSONNEL TRAINING AND EVALUATION IN ASEPTIC MANIPULATION SKILLS

Personnel who prepare CSPs shall be trained conscientiously and skillfully by expert personnel and through audio–video instructional sources and professional publications in the theoretical principles and practical skills of aseptic manipulations and in achieving and maintaining ISO Class 5 (see *Table 1*) environmental conditions before they begin to prepare CSPs. Compounding personnel shall perform didactic review and pass written and media-fill testing of aseptic manipulative skills initially, at least annually thereafter for low- and medium-risk level compounding, and semiannually for high-risk level compounding. Compounding personnel who fail written tests or whose media-fill test vials result in gross microbial colonization shall be immediately re-instructed and re-evaluated by expert compounding personnel to ensure correction of all aseptic practice deficiencies.

Media-Fill Challenge Testing—The skill of personnel to aseptically prepare CSPs may be evaluated using sterile fluid bacterial culture media-fill verification[1] (i.e., sterile bacterial culture medium transfer via a sterile syringe and needle). Media-fill testing is used to assess the quality of the aseptic skill of compounding personnel. Media-fill tests represent the most challenging or stressful conditions actually encountered by the personnel being evaluated when they prepare particular risk level CSPs and when sterilizing high-risk level CSPs. Media-fill challenge tests that simulate high-risk level compounding are also used to verify the capability of the compounding environment and process to produce a sterile preparation.

Commercially available sterile fluid culture media, such as Soybean–Casein Digest Medium (see *Sterility Tests* ⟨71⟩), shall be able to promote exponential colonization of bacteria that are most likely to be transmitted to CSPs from the compounding personnel and environment. Media-filled vials are generally incubated at 20° to 25° or at 30° to 35° for a minimum of 14 days. If two temperatures are used for incubation of media-filled samples, then these filled containers should be incubated for at least 7 days at each temperature (see *Microbiological Control and Monitoring of Aseptic Processing Environments* ⟨1116⟩). Failure is indicated by visible turbidity in the medium on or before 14 days.

IMMEDIATE-USE CSPS

The immediate-use provision is intended only for those situations where there is a need for emergency or immediate patient administration of a CSP. Such situations may include cardiopulmonary resuscitation, emergency room treatment, preparation of diagnostic agents, or critical therapy where the preparation of the CSP under conditions described for *Low-Risk Level CSPs* subjects the patient to additional risk due to delays in therapy. Immediate-use CSPs are not intended for storage for anticipated needs or batch compounding. Preparations that are medium-risk level and high-risk level CSPs shall not be prepared as immediate-use CSPs.

Immediate-use CSPs are exempt from the requirements described for *Low-Risk Level CSPs* only when all of the following criteria are met:

1. The compounding process involves simple transfer ofnot more than three commercially manufactured packages of sterilenonhazardous products or diagnostic radiopharmaceutical productsfrom the manufacturers' original containers and not

[1] U.S. Food and Drug Administration, Guidance for Industry, *Sterile Drug Products Produced by Aseptic Processing—Current Good Manufacturing Practice*, September 2004.

more than two entries into any one container or package (e.g., bag, vial) of sterile infusionsolution or administration container/device. For example, anti-neoplastics shall not be prepared asimmediate-use CSPs because they are hazardous drugs.

2. Unless required for the preparation, the compounding procedure is a continuous process not to exceed 1 hour.
3. During preparation, aseptic technique is followed and, if not immediately administered, the finished CSP is under continuous supervision to minimize the potential for contact with nonsterile surfaces, introduction of particulate matter or biological fluids, mix-ups with other CSPs, and direct contact of outside surfaces.
4. Administration begins not later than 1 hour following the start of the preparation of the CSP.
5. Unless immediately and completely administered by the person who prepared it or immediate and complete administration is witnessed by the preparer, the CSP shall bear a label listing patient identification information, the names and amounts of all ingredients, the name or initials of the person who prepared the CSP, and the exact 1-hour BUD and time.
6. If administration has not begun within 1 hour following the start of preparing the CSP, the CSP shall be promptly, properly, and safely discarded.

Compounding in worse than ISO Class 5 (see *Table 1*) conditions increases the likelihood of microbial contamination, and administration durations of microbially contaminated CSPs exceeding a few hours increase the potential for clinically significant microbial colonization and thus for patient harm, especially in critically ill or immunocompromised patients.

SINGLE-DOSE AND MULTIPLE-DOSE CONTAINERS

Opened or needle-punctured single-dose containers, such as bags, bottles, syringes, and vials of sterile products and CSPs shall be used within 1 hour if opened in worse than ISO Class 5 (see *Table 1*) air quality (see *Immediate-Use CSPs*), and any remaining contents must be discarded. Single-dose vials exposed to ISO Class 5 (see *Table 1*) or cleaner air may be used up to 6 hours after initial needle puncture. Opened single-dose ampuls shall not be stored for any time period. Multiple-dose containers (e.g., vials) are formulated for removal of portions on multiple occasions because they usually contain antimicrobial preservatives. The BUD after initially entering or opening (e.g., needle-punctured) multiple-dose containers is 28 days (see *Antimicrobial Effectiveness Testing* ⟨51⟩) unless otherwise specified by the manufacturer.

HAZARDOUS DRUGS AS CSPS

Although the potential therapeutic benefits of compounded sterile hazardous drug preparations generally outweigh the risks of their adverse effects in ill patients, exposed healthcare workers risk similar adverse effects with no therapeutic benefit. Occupational exposure to hazardous drugs can result in (1) acute effects, such as skin rashes; (2) chronic effects, including adverse reproductive events; and (3) possibly cancer (see Appendix A of NIOSH Publication no. 2004-165).

Hazardous drugs shall be prepared for administration only under conditions that protect the healthcare workers and other personnel in the preparation and storage areas. Hazardous drugs shall be stored separately from other inventory in a manner to prevent contamination and personnel exposure. Many hazardous drugs have sufficient vapor pressures that allow volatilization at room temperature; thus storage is preferably within a containment area such as a negative pressure room. The storage area should have sufficient general exhaust ventilation, at least 12 air changes per hour (ACPH)[2] to dilute and remove any airborne contaminants.

Hazardous drugs shall be handled with caution at all times using appropriate chemotherapy gloves during receiving, distribution, stocking, inventorying, preparation for administration, and disposal. Hazardous drugs shall be prepared in an ISO Class 5 (see *Table 1*) environment with protective engineering controls in place and following aseptic practices specified for the appropriate contamination risk levels defined in this chapter. Access shall be limited to areas where drugs are stored and prepared to protect persons not involved in drug preparation.

All hazardous drugs shall be prepared in a BSC[3] or a CACI that meets or exceeds the standards for CACI in this chapter. The ISO Class 5 (see *Table 1*) BSC or CACI shall be placed in an ISO Class 7 (see *Table 1*) area that is physically separated (i.e., a different area from other preparation areas) and optimally has not less than 0.01-inch water column negative pressure to adjacent positive pressure ISO Class 7 (see *Table 1*) or better ante-areas, thus providing inward airflow to contain any airborne drug. A pressure indicator shall be installed that can be readily monitored for correct room pressurization. The BSC and CACI optimally should be 100% vented to the outside air through HEPA filtration.

If a CACI that meets the requirements of this chapter is used outside of a buffer area, the compounding area shall maintain a minimum negative pressure of 0.01-inch water column and have a minimum of 12 ACPHs.

When closed-system vial-transfer devices (CSTDs) (i.e., vial-transfer systems that allow no venting or exposure of hazardous substance to the environment) are used, they shall be used within the ISO Class 5 (see *Table 1*) environment of a BSC or CACI. The use of a CSTD is preferred because of their inherent closed system process. In facilities that prepare a low volume of hazardous drugs, the use of two tiers of containment (e.g., CSTD within a BSC or CACI that is located in a non-negative pressure room) is acceptable.

---

[2] Guidelines for Environmental Infection Control in Health-Care Facilities, Recommendations of CDC and the Healthcare Infection Control Practices Advisory Committee (HICPAC), MMWR, vol. 52, no. RR-10, June 6, 2003, figure 3, pg. 12.
[3] NSF/ANSI 49.

Appropriate personnel protective equipment (PPE) shall be worn when compounding in a BSC or CACI and when using CSTD devices. PPE should include gowns, face masks, eye protection, hair covers, shoe covers or dedicated shoes, double gloving with sterile chemo-type gloves, and compliance with manufacturers' recommendations when using a CACI.

All personnel who compound hazardous drugs shall be fully trained in the storage, handling, and disposal of these drugs. This training shall occur prior to preparing or handling hazardous CSPs, and its effectiveness shall be verified by testing specific hazardous drugs preparation techniques. Such verification shall be documented for each person at least annually. This training shall include didactic overview of hazardous drugs, including mutagenic, teratogenic, and carcinogenic properties, and it shall include ongoing training for each new hazardous drug that enters the marketplace. Compounding personnel of reproductive capability shall confirm in writing that they understand the risks of handling hazardous drugs. The training shall include at least the following: (1) safe aseptic manipulation practices; (2) negative pressure techniques when utilizing a BSC or CACI; (3) correct use of CSTD devices; (4) containment, cleanup, and disposal procedures for breakages and spills; and (5) treatment of personnel contact and inhalation exposure.

NOTE—*Because standards of assay and unacceptable quantities of contamination of each drug have not been established in the literature, the following paragraph is a recommendation only. Future standards will be adopted as these assay methods are developed and proven.*

In order to ensure containment, especially in operations preparing large volumes of hazardous drugs, environmental sampling to detect uncontained hazardous drugs should be performed routinely (e.g., initially as a benchmark and at least every 6 months or more often as needed to verify containment). This sampling should include surface wipe sampling of the working area of BSCs and CACIs; counter tops where finished preparations are placed; areas adjacent to BSCs and CACIs, including the floor directly under the working area; and patient administration areas. Common marker hazardous drugs that can be assayed include cyclophosphamide, ifosfamide, methotrexate, and fluorouracil. If any measurable contamination (cyclophosphamide levels greater than 1.00 ng per cm^2 have been found to cause human uptake) is found by any of these quality assurance procedures, practitioners shall make the decision to identify, document, and contain the cause of contamination. Such action may include retraining, thorough cleaning (utilizing high-pH soap and water), and improving engineering controls. Examples of improving engineering controls are (1) venting BSCs or CACIs 100% to the outside, (2) implementing a CSTD, or (3) re-assessing types of BSCs or CACIs.

Disposal of all hazardous drug wastes shall comply with all applicable federal and state regulations. All personnel who perform routine custodial waste removal and cleaning activities in storage and preparation areas for hazardous drugs shall be trained in appropriate procedures to protect themselves and prevent contamination.

RADIOPHARMACEUTICALS AS CSPS

In the case of production of radiopharmaceuticals for positron emission tomography (PET), general test chapter *Positron Emission Tomography Drugs for Compounding, Investigational, and Research Uses* 〈823〉 supersedes this chapter. Upon release of a PET radiopharmaceutical as a finished drug product from a production facility, the further handling, manipulation, or use of the product will be considered compounding, and the content of this section and chapter is applicable.

For the purposes of this chapter, radiopharmaceuticals compounded from sterile components in closed sterile containers and with a volume of 100 mL or less for a single-dose injection or not more than 30 mL taken from a multiple-dose container (see *Packaging and Storage Requirements* 〈659〉) shall be designated as, and conform to, the standards for *Low-Risk Level CSPs*.

These radiopharmaceuticals shall be compounded using appropriately shielded vials and syringes in a properly functioning and certified ISO Class 5 (see *Table 1*) PEC located in an ISO Class 8 (see *Table 1*) or cleaner air environment to permit compliance with special handling, shielding, and negative air flow requirements.

Radiopharmaceutical vials designed for multi-use, compounded with technetium-99m, exposed to ISO Class 5 (see *Table 1*) environment, and punctured by needles with no direct contact contamination may be used up to the time indicated by manufacturers' recommendations. Storage and transport of properly shielded vials of radiopharmaceutical CSPs may occur in a limited access ambient environment without a specific ISO class designation.

Technetium-99m/molybdenum-99 generator systems shall be stored and eluted (operated) under conditions recommended by manufacturers and applicable state and federal regulations. Such generator systems shall be eluted in an ISO Class 8 (see *Table 1*) or cleaner air environment to permit special handling, shielding, and air flow requirements. To limit acute and chronic radiation exposure of inspecting personnel to a level that is as low as reasonably achievable (ALARA), direct visual inspection of radiopharmaceutical CSPs containing high concentrations of doses of radioactivity shall be conducted in accordance with ALARA.

Radiopharmaceuticals prepared as *Low-Risk Level CSPs with 12-Hour or Less BUD* shall be prepared in a segregated compounding area. A line of demarcation defining the segregated compounding area shall be established. Materials and garb exposed in a patient care and treatment area shall not cross a line of demarcation into the segregated compounding area.

ALLERGEN EXTRACTS AS CSPS

Allergen extracts as CSPs are single-dose and multiple-dose *intradermal or subcutaneous injections* that are prepared by specially trained physicians and personnel under their direct supervision. Allergen extracts as CSPs are not subject to the person-

nel, environmental, and storage requirements for all *CSP Microbial Contamination Risk Levels* in this chapter only when all of the following criteria are met:

1. The compounding process involves simple transfer via sterile needles and syringes of commercial sterile allergen products and appropriate sterile added substances (e.g., glycerin, phenol in sodium chloride injection).
2. All allergen extracts as CSPs shall contain appropriate substances in effective concentrations to prevent the growth of microorganisms. Nonpreserved allergen extracts shall comply with the appropriate CSP risk level requirements in the chapter.
3. Before beginning compounding activities, personnel perform a thorough hand-cleansing procedure by removing debris from under fingernails using a nail cleaner under running warm water followed by vigorous hand and arm washing to the elbows for at least 30 seconds with either nonantimicrobial or antimicrobial soap and water.
4. Compounding personnel don hair covers, facial hair covers, gowns, and face masks.
5. Compounding personnel perform antiseptic hand cleansing with an alcohol-based surgical hand scrub with persistent activity.
6. Compounding personnel don powder-free sterile gloves that are compatible with sterile 70% isopropyl alcohol (IPA) before beginning compounding manipulations.
7. Compounding personnel disinfect their gloves intermittently with sterile 70% IPA when preparing multiple allergen extracts as CSPs.
8. Ampul necks and vial stoppers on packages of manufactured sterile ingredients are disinfected by careful wiping with sterile 70% IPA swabs to ensure that the critical sites are wet for at least 10 seconds and allowed to dry before they are used to compound allergen extracts as CSPs.
9. The aseptic compounding manipulations minimize direct contact contamination (e.g., from glove fingertips, blood, nasal and oral secretions, shed skin and cosmetics, other nonsterile materials) of critical sites (e.g., needles, opened ampuls, vial stoppers).
10. The label of each multiple-dose vial (MDV) of allergen extracts as CSPs lists the name of one specific patient and a BUD and storage temperature range that is assigned based on manufacturers' recommendations or peer-reviewed publications.
11. Single-dose allergen extracts as CSPs shall not be stored for subsequent additional use.

Personnel who compound allergen extracts as CSPs must be aware of greater potential risk of microbial and foreign material contamination when allergen extracts as CSPs are compounded in compliance with the foregoing criteria instead of the more rigorous standards in this chapter for *CSP Microbial Contamination Risk Levels.* Although contaminated allergen extracts as CSPs can pose health risks to patients when they are injected *intradermally or subcutaneously,* these risks are substantially greater if the extract is inadvertently injected *intravenously.*

Change to read:

VERIFICATION OF COMPOUNDING ACCURACY AND STERILITY

The compounding procedures and sterilization methods for CSPs correspond to correctly designed and verified written documentation in the compounding facility. Verification requires planned testing, monitoring, and documentation to demonstrate adherence to environmental quality requirements, personnel practices, and procedures critical to achieving and maintaining sterility, accuracy, and purity of finished CSPs. For example, sterility testing (see *Test for Sterility of the Product To Be Examined* under *Sterility Tests* ⟨71⟩) may be applied to specimens of low- and medium-risk level CSPs, and standard self-contained biological indicators (BI) shall be added to nondispensable specimens of high-risk level CSPs before terminal sterilization for subsequent evaluation to determine whether the sterilization cycle was adequate (see ●*Biological Indicators for Sterilization* ⟨1229.5⟩ ● (CN 1-May-2017)). Packaged and labeled CSPs shall be visually inspected for physical integrity and expected appearance, including final fill amount. The accuracy of identities, concentrations, amounts, and purities of ingredients in CSPs shall be confirmed by reviewing labels on packages, observing and documenting correct measurements with approved and correctly standardized devices, and reviewing information in labeling and certificates of analysis provided by suppliers. When the correct identity, purity, strength, and sterility of ingredients and components of CSPs cannot be confirmed (in cases of, for example, unlabeled syringes, opened ampuls, punctured stoppers of vials and bags, containers of ingredients with incomplete labeling), such ingredients and components shall be discarded immediately.

Some individual ingredients, such as bulk drug substances, are not labeled with expiration dates when they are stable indefinitely in their commercial packages under their labeled storage conditions. However, despite retaining full chemical stability, such ingredients may gain or lose moisture during storage and use. Changes in moisture content may require testing (see *Loss on Drying* ⟨731⟩) to determine the correct amount to weigh for accurate content of active chemical moieties in CSPs (see ●*Pharmaceutical Calculations in Pharmacy Practice* ⟨1160⟩● (CN 1-May-2017)).

Although not required, a quantitative stability-indicating chemical assay is recommended to ensure compounding accuracy of CSPs, especially those that contain drug ingredients with a narrow therapeutic plasma concentration range.

General Chapters

Sterilization Methods

The licensed healthcare professionals who supervise compounding shall be responsible for determining that the selected sterilization method (see *Methods of Sterilization* under *Sterilization and Sterility Assurance of Compendial Articles* ⟨1211⟩) both sterilizes and maintains the strength, purity, quality, and packaging integrity of CSPs. The selected sterilization process is obtained from experience and appropriate information sources (e.g., see *Sterilization and Sterility Assurance of Compendial Articles* ⟨1211⟩)—and, preferably, verified wherever possible—to achieve sterility in the particular CSPs. General guidelines for matching CSPs and components to appropriate sterilization methods include the following:

1. CSPs have been ascertained to remain physically and chemically stable when subjected to the selected sterilization method.
2. Glass and metal devices may be covered tightly with aluminum foil, then exposed to dry heat in an oven at a mean temperature of 250° for 30 minutes to achieve sterility and depyrogenation (see *Dry-Heat Sterilization* under *Sterilization and Sterility Assurance of Compendial Articles* ⟨1211⟩ and *Bacterial Endotoxins Test* ⟨85⟩). Such items are either used immediately or stored until use in an environment suitable for compounding *Low-Risk Level CSPs* and *Medium-Risk Level CSPs*.
3. Personnel ascertain from appropriate information sources that the sterile microporous membrane filter used to sterilize CSP solutions, during either compounding or administration, is chemically and physically compatible with the CSP.

STERILIZATION OF HIGH-RISK LEVEL CSPS BY FILTRATION

Commercially available sterile filters shall be approved for human-use applications in sterilizing pharmaceutical fluids. Sterile filters used to sterilize CSPs shall be pyrogen free and have a nominal pore size of 0.2 or 0.22 μm. They shall be certified by the manufacturer to retain at least 10^7 microorganisms of a strain of *Brevundimonas (Pseudomonas) diminuta* on each square centimeter of upstream filter surface area under conditions similar to those in which the CSPs will be sterilized (see *High-Risk Conditions* in *High-Risk Level CSPs*).

The compounding supervisor shall ensure, directly or from appropriate documentation, that the filters are chemically and physically stable at the pressure and temperature conditions to be used, that they have enough capacity to filter the required volumes, and that they will achieve sterility and maintain prefiltration pharmaceutical quality, including strength of ingredients of the specific CSP. The filter dimensions and liquid material to be sterile-filtered shall permit the sterilization process to be completed rapidly, without the replacement of the filter during the process. When CSPs are known to contain excessive particulate matter, a prefilter of larger nominal pore size membrane is placed upstream from the sterilizing filter to remove gross particulate contaminants in order to maximize the efficiency of the sterilizing filter.

Filter units used to sterilize CSPs shall also be subjected to manufacturers' recommended integrity test, such as the bubble point test.

Compounding personnel shall ascertain that selected filters will achieve sterilization of the particular CSPs being sterilized. Large deviations from usual or expected chemical and physical properties of CSPs (e.g., water-miscible alcohols) may cause undetectable damage to filter integrity and shrinkage of microorganisms to sizes smaller than filter nominal pore size.

STERILIZATION OF HIGH-RISK LEVEL CSPS BY STEAM

The process of thermal sterilization employing saturated steam under pressure, or autoclaving, is the preferred method to terminally sterilize aqueous preparations that have been verified to maintain their full chemical and physical stability under the conditions employed (see *Steam Sterilization* under *Sterilization and Sterility Assurance of Compendial Articles* ⟨1211⟩). To achieve sterility, all materials are to be exposed to steam at 121° under a pressure of about 1 atmosphere or 15 psi for the duration verified by testing to achieve sterility of the items, which is usually 20 to 60 minutes for CSPs. An allowance shall be made for the time required for the material to reach 121° before the sterilization exposure duration is timed.

Not directly exposing items to pressurized steam may result in survival of microbial organisms and spores. Before their sterilization, plastic, glass, and metal devices are tightly wrapped in low-particle-shedding paper or fabrics or sealed in envelopes that prevent poststerilization microbial penetration. Immediately before filling ampuls and vials that will be steam sterilized, solutions are passed through a filter having a nominal pore size not larger than 1.2 μm for removal of particulate matter. Sealed containers shall be able to generate steam internally; thus, stoppered and crimped empty vials shall contain a small amount of moisture to generate steam.

The description of steam sterilization conditions and duration for specific CSPs shall be included in written documentation in the compounding facility. The effectiveness of steam sterilization shall be verified using appropriate BIs of *Bacillus stearothermophilus* (see •*Biological Indicators for Sterilization* ⟨1229.5⟩• (CN1-May-2017)) and other confirmation methods such as temperature-sensing devices (see *Sterilization and Sterility Assurance of Compendial Articles* ⟨1211⟩ and *Sterility Tests* ⟨71⟩).

STERILIZATION OF HIGH-RISK LEVEL CSPS BY DRY HEAT

Dry heat sterilization is usually done as a batch process in an oven designed for sterilization. Heated filtered air shall be evenly distributed throughout the chamber by a blower device. The oven should be equipped with a system for controlling tem-

perature and exposure period. Sterilization by dry heat requires higher temperatures and longer exposure times than does sterilization by steam. Dry heat shall be used only for those materials that cannot be sterilized by steam, when either the moisture would damage the material or the material is impermeable. During sterilization, sufficient space shall be left between materials to allow for good circulation of the hot air. The description of dry heat sterilization conditions and duration for specific CSPs shall be included in written documentation in the compounding facility. The effectiveness of dry heat sterilization shall be verified using appropriate BIs of *Bacillus subtilis* (see ●*Biological Indicators for Sterilization* ⟨1229.5⟩● (CN 1-May-2017)) and other confirmation methods such as temperature-sensing devices (see *Sterilization and Sterility Assurance of Compendial Articles* ⟨1211⟩ and *Sterility Tests* ⟨71⟩). [Note—Dry heat sterilization may be performed at a lower temperature than may be effective for depyrogenation].

Depyrogenation by Dry Heat

Dry heat depyrogenation shall be used to render glassware or containers such as vials free from pyrogens as well as viable microbes. A typical cycle would be 30 minutes at 250°. The description of the dry heat depyrogenation cycle and duration for specific load items shall be included in written documentation in the compounding facility. The effectiveness of the dry heat depyrogenation cycle shall be verified using endotoxin challenge vials (ECVs). The bacterial endotoxin test should be performed on the ECVs to verify that the cycle is capable of achieving a 3-log reduction in endotoxin (see *Sterilization and Sterility Assurance of Compendial Articles* ⟨1211⟩ and *Bacterial Endotoxins Test* ⟨85⟩).

ENVIRONMENTAL QUALITY AND CONTROL

Achieving and maintaining sterility and overall freedom from contamination of a CSP is dependent on the quality status of the components incorporated, the process utilized, personnel performance, and the environmental conditions under which the process is performed. The standards required for the environmental conditions depend on the amount of exposure of the CSP to the immediate environment anticipated during processing. The quality and control of environmental conditions for each risk level of operation are explained in this section. In addition, operations using nonsterile components require the use of a method of preparation designed to produce a sterile preparation.

Exposure of Critical Sites

Maintaining the sterility and cleanliness (i.e., freedom from sterile foreign materials) of critical sites is a primary safeguard for CSPs. Critical sites are locations that include any component or fluid pathway surfaces (e.g., vial septa, injection ports, beakers) or openings (e.g., opened ampuls, needle hubs) exposed and at risk of direct contact with air (e.g., ambient room or HEPA filtered), moisture (e.g., oral and mucosal secretions), or touch contamination. The risk of, or potential for, critical sites to be contaminated with microorganisms and foreign matter increases with increasing exposed area of the critical sites, the density or concentration of contaminants, and exposure duration to worse than ISO Class 5 (see *Table 1*) air. Examples include an opened ampul or vial stopper on a 10-mL or larger vial or an injection port on a package of intravenous solution having an area larger than the point of a needle or the tip of a syringe.

The nature of a critical site also affects the risk of contamination. The relatively rough, permeable surface of an elastomeric closure retains microorganisms and other contaminants after swabbing with a sterile 70% IPA pad more readily than does the smoother glass surface of the neck of an ampul. Therefore, the surface disinfection can be expected to be more effective for an ampul.

Protection of critical sites by precluding physical contact and airborne contamination shall be given the highest priority in sterile compounding practice. Airborne contaminants, especially those generated by sterile compounding personnel, are much more likely to reach critical sites than are contaminants that are adhering to the floor or other surfaces below the work level. Furthermore, large and high-density particles that are generated and introduced by compounding manipulations and personnel have the potential to settle on critical sites even when those critical sites are exposed within ISO Class 5 (see *Table 1*) air.

ISO Class 5 Air Sources, Buffer Areas, and Ante-Areas

The most common sources of ISO Class 5 (see *Table 1*) air quality for exposure of critical sites are horizontal and vertical LAFWs, CAIs, and CACIs. A clean room (see *Microbiological Control and Monitoring of Aseptic Processing Environments* ⟨1116⟩) is a compounding environment that is supplied with HEPA or HEPA-filtered air that meets ISO Class 7 (see *Table 1*), the access to which is limited to personnel trained and authorized to perform sterile compounding and facility cleaning. A buffer area is an area that provides at least ISO Class 7 (see *Table 1*) air quality.

Figure 1 is a conceptual representation of the placement of an ISO Class 5 (see *Table 1*) PEC in a segregated compounding area used for low-risk level CSPs with 12-hour or less BUD. This plan depicts the most critical operation area located within the PEC in a designated area (see definition of *Segregated Compounding Area*) separated from activities not essential to the preparation of CSPs. Placement of devices (e.g., computers, printers) and objects (e.g., carts, cabinets) that are not essential to com-

pounding in the segregated area should be restricted or limited, depending on their effect on air quality in the ISO Class 5 (see *Table 1*) PEC.

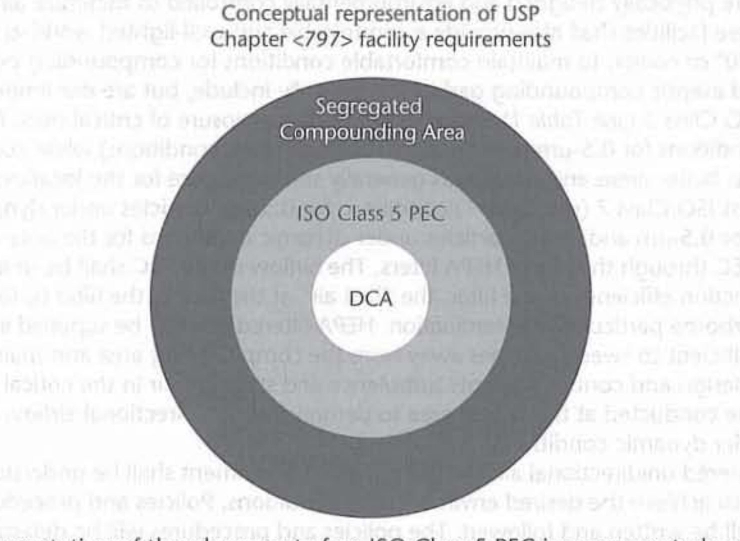

Figure 1. Conceptual representation of the placement of an ISO Class 5 PEC in a segregated compounding area used for low-risk level CSPs with 12-hour or less BUD.

Figure 2 is a conceptual representation of the arrangement of a facility for preparation of CSPs categorized as low-, medium-, and high-risk level. The quality of the environmental air increases with movement from the outer boundary to the direct compounding area (DCA). Placement of devices in ante-areas and buffer areas is dictated by their effect on the designated environmental quality of atmospheres and surfaces, which shall be verified by monitoring (see *Viable and Nonviable Environmental Sampling (ES) Testing*). It is the responsibility of each compounding facility to ensure that each source of ISO Class 5 (see *Table 1*) environment for exposure of critical sites and sterilization by filtration is properly located, operated, maintained, monitored, and verified.

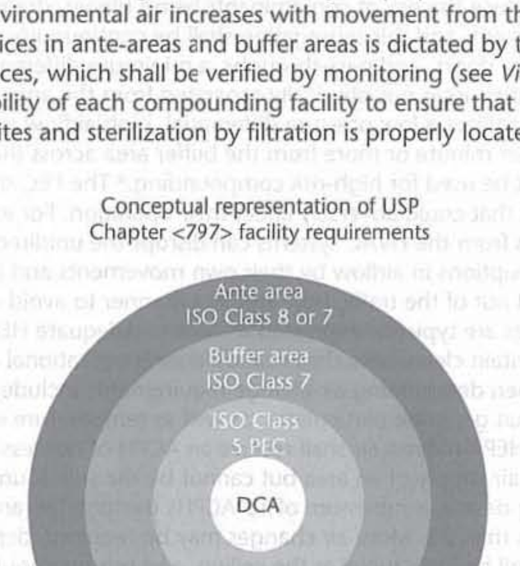

Figure 2. Conceptual representation of the arrangement of a facility for preparation of CSPs categorized as low-, medium-, and high-risk level.

Placement of devices (e.g., computers, printers) and objects (e.g., carts, cabinets) that are not essential to compounding in buffer areas is dictated by their effect on the required environmental quality of air atmospheres and surfaces, which shall be verified by monitoring (see *Viable and Nonviable Environmental Sampling (ES) Testing*). It is the responsibility of each compounding facility to ensure that each source of ISO Class 5 (see *Table 1*) environment for exposure of critical sites and sterilization by filtration is properly located, operated, maintained, monitored, and verified.

Facility Design and Environmental Controls

Compounding facilities are physically designed and environmentally controlled to minimize airborne contamination from contacting critical sites. These facilities shall also provide a comfortable and well-lighted working environment, which typically includes a temperature of 20° or cooler, to maintain comfortable conditions for compounding personnel to perform flawlessly when attired in the required aseptic compounding garb. PECs typically include, but are not limited to, LAFWs, BSCs, CAIs, and CACIs, which provide an ISO Class 5 (see *Table 1*) environment for the exposure of critical sites. PECs shall maintain ISO Class 5 (see *Table 1*) or better conditions for 0.5-µm particles (dynamic operating conditions) while compounding CSPs. Secondary engineering controls such as buffer areas and ante-areas generally serve as a core for the location of the PEC. Buffer areas are designed to maintain at least ISO Class 7 (see *Table 1*) conditions for 0.5-µm particles under dynamic conditions and ISO Class 8 (see *Table 1*) conditions for 0.5-µm and larger particles under dynamic conditions for the ante-areas. Airborne contamination control is achieved in the PEC through the use of HEPA filters. The airflow in the PEC shall be unidirectional (laminar flow), and because of the particle collection efficiency of the filter, the "first air" at the face of the filter is, for the purposes of aseptic compounding, free from airborne particulate contamination. HEPA-filtered air shall be supplied in critical areas (ISO Class 5, see *Table 1*) at a velocity sufficient to sweep particles away from the compounding area and maintain unidirectional airflow during operations. Proper design and control prevents turbulence and stagnant air in the critical area. In situ air pattern analysis via smoke studies shall be conducted at the critical area to demonstrate unidirectional airflow and sweeping action over and away from the product under dynamic conditions.

The principles of HEPA-filtered unidirectional airflow in the work environment shall be understood and practiced in the compounding process in order to achieve the desired environmental conditions. Policies and procedures for maintaining and working within the PEC area shall be written and followed. The policies and procedures will be determined by the scope and risk levels of the aseptic compounding activities utilized during the preparation of the CSPs. The CSP work environment is designed to have the cleanest work surfaces (PEC) located in a buffer area. The buffer area shall maintain at least ISO Class 7 (see *Table 1*) conditions for 0.5-µm and larger particles under dynamic operating conditions. The room shall be segregated from surrounding, unclassified spaces to reduce the risk of contaminants being blown, dragged, or otherwise introduced into the filtered unidirectional airflow environment, and this segregation shall be continuously monitored. For rooms providing a physical separation through the use of walls, doors, and pass-throughs, a minimum differential positive pressure of 0.02- to 0.05-inch water column is required. For buffer areas not physically separated from the ante-areas, the principle of displacement airflow shall be employed. This concept utilizes a low pressure differential, high airflow principle. Using displacement airflow typically requires an air velocity of 40 ft per minute or more from the buffer area across the line of demarcation into the ante-area.

The displacement concept shall not be used for high-risk compounding.[4] The PEC shall be placed within a buffer area in such a manner as to avoid conditions that could adversely affect their operation. For example, strong air currents from opened doors, personnel traffic, or air streams from the HVAC systems can disrupt the unidirectional airflow in open-faced workbenches. The operators may also create disruptions in airflow by their own movements and by the placement of objects onto the work surface. The PEC shall be placed out of the traffic flow and in a manner to avoid disruption from the HVAC system and room cross-drafts. Room air exchanges are typically expressed as ACPHs. Adequate HEPA-filtered airflow supplied to the buffer area and ante-area is required to maintain cleanliness classification during operational activity through the number of ACPHs. Factors that should be considered when determining air-change requirements include number of personnel working in the room and compounding processes that generate particulates, as well as temperature effects. An ISO Class 7 (see *Table 1*) buffer area and ante-area supplied with HEPA-filtered air shall receive an ACPH of not less than 30. The PEC is a good augmentation to generating air changes in the air supply of an area but cannot be the sole source of HEPA-filtered air. If the area has an ISO Class 5 (see *Table 1*) recirculating device, a minimum of 15 ACPHs through the area supply HEPA filters is adequate, providing the combined ACPH is not less than 30. More air changes may be required, depending on the number of personnel and processes. HEPA-filtered supply air shall be introduced at the ceiling, and returns should be mounted low on the wall, creating a general top-down dilution of area air with HEPA-filtered make-up air. Ceiling-mounted returns are not recommended. All HEPA filters should be efficiency tested using the most penetrating particle size and should be leak tested at the factory and then leak tested again in situ after installation.[5]

Activities and tasks carried out within the buffer area shall be limited to only those necessary when working within a controlled environment. Only the furniture, equipment, supplies, and other material required for the compounding activities to be performed shall be brought into the area, and they shall be nonpermeable, nonshedding, cleanable, and resistant to disinfectants. Whenever such items are brought into the area, they shall first be cleaned and disinfected. Whenever possible, equipment and other items used in the buffer area shall not be taken out of the area except for calibration, servicing, or other activities associated with the proper maintenance of the item.

The surfaces of ceilings, walls, floors, fixtures, shelving, counters, and cabinets in the buffer area shall be smooth, impervious, free from cracks and crevices, and nonshedding, thereby promoting cleanability and minimizing spaces in which microorganisms and other contaminants may accumulate. The surfaces shall be resistant to damage by disinfectant agents. Junctures of ceilings to walls shall be coved or caulked to avoid cracks and crevices where dirt can accumulate. If ceilings consist of inlaid

[4] ISO 14644-4:2001 Cleanrooms and associated controlled environments—Design, construction, and start-up, *Case Postale 56*, CH-1211 Geneve 20, Switzerland, tel. +41 22 749 01 11.

[5] By definition (IEST RP CC 001.4), HEPA filters are a minimum of 99.97% efficient when tested using 0.3-µm thermally generated particles and a photometer or rated at their most penetrating particle size using a particle counter.

panels, the panels shall be impregnated with a polymer to render them impervious and hydrophobic, and they shall be caulked around each perimeter to seal them to the support frame. Walls may be constructed of flexible material (e.g., heavy gauge polymer), panels locked together and sealed, or of epoxy-coated gypsum board. Preferably, floors are overlaid with wide sheet vinyl flooring with heat-welded seams and coving to the sidewall. Dust-collecting overhangs, such as ceiling utility pipes, and ledges, such as windowsills, should be avoided. The exterior lens surface of ceiling lighting fixtures should be smooth, mounted flush, and sealed. Any other penetrations through the ceiling or walls shall be sealed. The buffer area shall not contain sources of water (sinks) or floor drains. Work surfaces shall be constructed of smooth, impervious materials, such as stainless steel or molded plastic, so that they are easily cleaned and disinfected. Carts should be of stainless steel wire, nonporous plastic, or sheet metal construction with good quality, cleanable casters to promote mobility. Storage shelving, counters, and cabinets shall be smooth, impervious, free from cracks and crevices, nonshedding, cleanable, and disinfectable; their number, design, and manner of installation shall promote effective cleaning and disinfection.

Placement of Primary Engineering Controls

PECs (LAFWs, BSCs, CAIs, and CACIs) shall be located within a restricted access ISO Class 7 (see *Table 1*) buffer area (see *Figure 1*), with the following CAI/CACI exceptions below:

- Only authorized personnel and materials required for compounding and cleaning shall be permitted in the buffer area.
- Presterilization procedures for high-risk level CSPs, such as weighing and mixing, shall be completed in no worse than an ISO Class 8 (see *Table 1*) environment.
- PECs shall be located out of traffic patterns and away from room air currents that could disrupt the intended airflow patterns.

CAIs and CACIs shall be placed in an ISO Class 7 (see *Table 1*) buffer area *unless* they meet all of the following conditions:

- The isolator shall provide isolation from the room and maintain ISO Class 5 (see *Table 1*) during dynamic operating conditions, including transferring ingredients, components, and devices into and out of the isolator and during preparation of CSPs.
- Particle counts sampled approximately 6 to 12 inches upstream of the critical exposure site shall maintain ISO Class 5 (see *Table 1*) levels during compounding operations.
- Not more than 3520 particles (0.5 µm and larger) per m^3 shall be counted during material transfer, with the particle counter probe located as near to the transfer door as possible without obstructing the transfer.[6]

It is incumbent on the compounding personnel to obtain documentation from the manufacturer that the CAI/CACI will meet this standard when located in environments where the background particle counts exceed ISO Class 8 (see *Table 1*) for 0.5-µm and larger particles. When isolators are used for sterile compounding, the recovery time to achieve ISO Class 5 (see *Table 1*) air quality shall be documented and internal procedures developed to ensure that adequate recovery time is allowed after material transfer before and during compounding operations.

If the PEC is a CAI or CACI that does not meet the requirements above or is a LAFW or BSC that cannot be located within an ISO Class 7 (see *Table 1*) buffer area, then only low-risk level nonhazardous and radiopharmaceutical CSPs pursuant to a physician order for a specific patient may be prepared, and administration of the CSP shall commence within 12 hours of preparation or as recommended in the manufacturer's package insert, whichever is less.

Viable and Nonviable Environmental Sampling (ES) Testing

The ES program should provide information to staff and leadership to demonstrate that the PEC is maintaining an environment within the compounding area that consistently ensures acceptably low viable and nonviable particle levels. The compounding area includes the ISO Class 5 (see *Table 1*) PEC (LAFWs, BSCs, CAIs, and CACIs), buffer areas, ante-areas, and segregated compounding areas.

Environmental sampling shall occur as part a comprehensive quality management program and shall occur minimally under any of the following conditions:

- as part of the commissioning and certification of new facilities and equipment;
- following any servicing of facilities and equipment;
- as part of the re-certification of facilities and equipment (i.e., every 6 months);
- in response to identified problems with end products or staff technique; or
- in response to issues with CSPs, observed compounding personnel work practices, or patient-related infections (where the CSP is being considered as a potential source of the infection).

ENVIRONMENTAL NONVIABLE PARTICLE TESTING PROGRAM

A program to sample nonviable airborne particles differs from that for viable particles in that it is intended to directly measure the performance of the engineering controls used to create the various levels of air cleanliness, for example, ISO Class 5, 7, or 8 (see *Table 1*).

[6] Sample procedures are detailed in CETA Applications Guide CAG-002-2006–section 2.09.

Engineering Control Performance Verification—PECs (LAFWs, BSCs, CAIs, and CACIs) and secondary engineering controls (buffer and ante-areas) are essential components of the overall contamination control strategy for aseptic compounding. As such, it is imperative that they perform as designed and that the resulting levels of contamination be within acceptable limits. Certification procedures such as those outlined in *Certification Guide for Sterile Compounding Facilities* (CAG-003-2006)[7] shall be performed by a qualified individual no less than every 6 months and whenever the device or room is relocated or altered or major service to the facility is performed.

Total Particle Counts—Certification that each ISO classified area, for example, ISO Class 5, 7, and 8 (see *Table 1*), is within established guidelines shall be performed no less than every 6 months and whenever the LAFW, BSC, CAI, or CACI is relocated or the physical structure of the buffer area or ante-area has been altered. Testing shall be performed by qualified operators using current, state-of-the-art electronic equipment with results of the following:

- ISO Class 5: not more than 3520 particles 0.5 µm and larger size per cubic meter of air for any LAFW, BSC, CAI, and CACI;
- ISO Class 7: not more than 352,000 particles of 0.5 µm size and larger per cubic meter of air for any buffer area;
- ISO Class 8: not more than 3,520,000 particles or 0.5 µm size and larger per cubic meter of air for any ante-area.

All certification records shall be maintained and reviewed by supervising personnel or other designated employees to ensure that the controlled environments comply with the proper air cleanliness, room pressures, and ACPHs.

PRESSURE DIFFERENTIAL MONITORING

A pressure gauge or velocity meter shall be installed to monitor the pressure differential or airflow between the buffer area and the ante-area and between the ante-area and the general environment outside the compounding area. The results shall be reviewed and documented on a log at least every work shift (minimum frequency shall be at least daily) or by a continuous recording device. The pressure between the ISO Class 7 (see *Table 1*) and the general pharmacy area shall not be less than 5 Pa (0.02 inch water column). In facilities where low- and medium-risk level CSPs are prepared, differential airflow shall maintain a minimum velocity of 0.2 meters per second (40 feet per minute) between buffer area and ante-area.

ENVIRONMENTAL VIABLE AIRBORNE PARTICLE TESTING PROGRAM

The risk of contaminating a CSP prepared under low-risk level and medium-risk level conditions is highly dependent on proper hand hygiene and garbing practices, compounding personnel aseptic technique, and the presence of surface contamination, assuming that all work is performed in a certified and properly functioning ISO Class 5 (see *Table 1*) PEC and secondary engineering controls, ISO Class 7 (see *Table 1*) buffer area, and ISO Class 8 (see *Table 1*) ante-area. High-risk level CSPs pose the greatest threat to patients because compounding personnel are tasked with the requirement of processing nonsterile components and devices in order to achieve sterility.

A sampling program in conjunction with an observational audit is designed to evaluate the competency of compounding personnel work practices, allowing for the implementation of corrective actions on an ongoing basis (see *Personnel Training and Competency Evaluation of Garbing, Aseptic Work Practices and Cleaning/Disinfection Procedures*).

Sampling Plan—An appropriate environmental sampling plan shall be developed for airborne viable particles based on a risk assessment of compounding activities performed.

Selected sampling sites shall include locations within each ISO Class 5 (see *Table 1*) environment and in the ISO Class 7 and 8 (see *Table 1*) areas and in the segregated compounding areas at greatest risk of contamination (e.g., work areas near the ISO Class 5 [see *Table 1*] environment, counters near doors, pass-through boxes). The plan shall include sample location, method of collection, frequency of sampling, volume of air sampled, and time of day as related to activity in the compounding area and action levels.

Review of the data generated during a sampling event may detect elevated amounts of airborne microbial bioburden; such changes may be indicative of adverse changes within the environment. It is recommended that compounding personnel refer to *Microbiological Control and Monitoring of Aseptic Processing Environments* ⟨1116⟩ and the CDC's "Guidelines for Environmental Infection Control in Healthcare Facilities, 2003" for more information.

Growth Medium—A general microbiological growth medium such as Soybean–Casein Digest Medium shall be used to support the growth of bacteria. Malt extractagar or some other media that supports the growth of fungi shall be used inhigh-risk level compounding environments. Media used for surface sampling must be supplemented with additives to neutralize the effects of disinfecting agents (e.g., TSA with lecithin and polysorbate 80).

Viable Air Sampling—Evaluation of airborne microorganisms using volumetric collection methods in the controlled air environments (LAFWs, CAIs, clean room or buffer areas, and ante-areas) shall be performed by properly trained individuals for all compounding risk levels.

Impaction shall be the preferred method of volumetric air sampling. Use of settling plates for qualitative air sampling may not be able to determine adequately the quality of air in the controlled environment. The settling of particles by gravity onto culture plates depends on the particle size and may be influenced by air movement. Consequently, the number of colony-

[7] Controlled Environment Testing Association, 1500 Sunday Drive, Ste. 102, Raleigh, NC 27607; www.CETAinternational.org.

forming units (cfu) on a settling plate may not always relate to the concentrations of viable particles in the sampled environment.

For low-, medium-, and high-risk level compounding, air sampling shall be performed at locations that are prone to contamination during compounding activities and during other activities such as staging, labeling, gowning, and cleaning. Locations shall include zones of air backwash turbulence within LAFW and other areas where air backwash turbulence may enter the compounding area (doorways, in and around ISO Class 5 [see *Table 1*] PEC and environments). Consideration should be given to the overall effect the chosen sampling method will have on the unidirectional airflow within a compounding environment.

For low-risk level CSPs with 12-hour or less BUD prepared in a PEC (LAFWs, BSCs, CAIs) that maintains an ISO Class 5 (see *Table 1*), air sampling shall be performed at locations inside the ISO Class 5 (see *Table 1*) environment and other areas that are in close proximity to the ISO Class 5 (see *Table 1*) environment during the certification of the PEC.

Air Sampling Devices—There are a number of manufacturers of electronic air sampling equipment. It is important that personnel refer to the manufacturer's recommended procedures when using the equipment to perform volumetric air sampling procedures. The instructions in the manufacturer's user's manual for verification and use of electric air samplers that actively collect volumes of air for evaluation must be followed. A sufficient volume of air (400 to 1000 liters) shall be tested at each location in order to maximize sensitivity. The volumetric air sampling devices need to be serviced and calibrated as recommended by the manufacturer.

It is recommended that compounding personnel also refer to *Methodology and Instrumentation for Quantitation of Viable Airborne Microorganisms* under *Microbiological Control and Monitoring of Aseptic Processing Environments* ⟨1116⟩, which provides more information on the use of volumetric air samplers and volume of air that should be sampled to detect environmental bioburden excursions.

Air Sampling Frequency and Process—Air sampling shall be performed at least semiannually (i.e., every 6 months) as part of the re-certification of facilities and equipment. If compounding occurs in multiple locations within an institution (e.g., main pharmacy, satellites), environmental sampling is required for each individual compounding area. A sufficient volume of air shall be sampled and the manufacturer's guidelines for use of the electronic air sampling equipment followed. Any facility construction or equipment servicing may require that air sampling be performed during these events.

Incubation Period—At the end of the designated sampling or exposure period for air sampling activities, the microbial growth media plates are recovered and their covers secured (e.g., taped), and they are inverted and incubated at a temperature and for a time period conducive to multiplication of microorganisms. TSA should be incubated at 30° to 35° for 48 to 72 hours. Malt extract agar or other suitable fungal media should be incubated at 26° to 30° for 5 to 7 days. The number of discrete colonies of microorganisms are counted and reported as cfu and documented on an environmental sampling form. Counts from air sampling need to be transformed into cfu per cubic meter of air and evaluated for adverse trends.

Action Levels, Documentation, and Data Evaluation—The value of viable microbial sampling of the air in the compounding environment is realized when the data are used to identify and correct an unacceptable situation. Sampling data shall be collected and reviewed on a periodic basis as a means of evaluating the overall control of the compounding environment. If an activity consistently shows elevated levels of microbial growth, competent microbiology personnel shall be consulted.

Any cfu count that exceeds its respective action level (see *Table 2*) should prompt a re-evaluation of the adequacy of personnel work practices, cleaning procedures, operational procedures, and air filtration efficiency within the aseptic compounding location. An investigation into the source of the contamination shall be conducted. Sources could include HVAC systems, damaged HEPA filters, and changes in personnel garbing or work practices. The source of the problem shall be eliminated, the affected area cleaned, and resampling performed.

Counts of cfu are to be used as an approximate measure of the environmental microbial bioburden. Action levels are determined on the basis of cfu data gathered at each sampling location and trended over time. The numbers in *Table 2* should be used only as guidelines. Regardless of the number of cfu identified in the pharmacy, further corrective actions will be dictated by the identification of microorganisms recovered (at least the genus level) by an appropriate credentialed laboratory of any microbial bioburden captured as a cfu using an impaction air sampler. Highly pathogenic microorganisms (e.g., Gram-negative rods, coagulase positive staphylococcus, molds and yeasts) can be potentially fatal to patients receiving CSPs and must be immediately remedied, regardless of cfu count, with the assistance of a competent microbiologist, infection control professional, or industrial hygienist.

Table 2. Recommended Action Levels for Microbial Contamination*

†(cfu per cubic meter [1000 liters] of air per plate)

Classification	Air Sample†
ISO Class 5	> 1
ISO Class 7	> 10
ISO Class 8 or worse	> 100

* Guidance for Industry–Sterile Drug Products Produced by Aseptic Processing–Current Good Manufacturing Practice–US HHS, FDA September 2004.

Additional Personnel Requirements

Food, drinks, and materials exposed in patient care and treatment areas shall not enter ante-areas, buffer areas, or segregated compounding areas where components and ingredients of CSPs are present. When compounding activities require the

manipulation of a patient's blood-derived or other biological material (e.g., radiolabeling a patient's or donor's white blood cells), the manipulations shall be clearly separated from routine material-handling procedures and equipment used in CSP preparation activities, and they shall be controlled by specific SOPs in order to avoid any cross-contamination. Packaged compounding supplies and components, such as needles, syringes, tubing sets, and small- and large-volume parenterals, should be uncartoned and wiped down with a disinfectant that does not leave a residue (e.g., sterile 70% IPA), when possible in an ante-area of ISO Class 8 (see *Table 1*) air quality, before being passed into the buffer areas. Personnel hand hygiene and garbing procedures are also performed in the ante-area, which may contain a sink that enables hands-free use with a closed system of soap dispensing to minimize the risk of extrinsic contamination. There shall be some demarcation designation that separates the ante-area from the buffer area. Adequate provision for performing antiseptic hand cleansing using an alcohol-based surgical hand scrub with persistent activity followed by the donning of sterile gloves should be provided after entry into the buffer area.

Cleaning and Disinfecting the Compounding Area

Environmental contact is a major source of microbial contamination of CSPs. Consequently, scrupulous attention to cleaning and disinfecting the sterile compounding areas is required to minimize this as a source of CSP contamination.

The cleaning and disinfecting practices and frequencies in this section apply to ISO Class 5 (see *Table 1*) compounding areas for exposure of critical sites as well as buffer areas, ante-areas, and segregated compounding areas. Compounding personnel are responsible for ensuring that the frequency of cleaning is in accordance with the requirements stated in *Table 3* and determining the cleaning and disinfecting products to be used (see *Appendix II*). Any organizational or institutional policies regarding disinfectant selection should be considered by compounding personnel. All cleaning and disinfecting practices and policies for the compounding of CSPs shall be included in written SOPs and shall be followed by all compounding personnel.

Table 3. Minimum Frequency of Cleaning and Disinfecting Compounding Areas

Site	Minimum Frequency
ISO Class 5 (see *Table 1*) Primary Engineering Control (e.g., LAFW, BSC, CAI, CACI)	At the beginning of each shift, before each batch, not longer than 30 minutes following the previous surface disinfection when ongoing compounding activities are occurring, after spills, and when surface contamination is known or suspected
Counters and easily cleanable work surfaces	Daily
Floors	Daily
Walls	Monthly
Ceilings	Monthly
Storage shelving	Monthly

The selection and use of disinfectants in healthcare facilities is guided by several properties, such as microbicidal activity, inactivation by organic matter, residue, and shelf life (see *Appendix II*). In general, highly toxic disinfectants, such as glutaraldehyde, are not used on housekeeping surfaces (e.g., floors, countertops). Many disinfectants registered by the EPA are one-step disinfectants. This means that the disinfectant has been formulated to be effective in the presence of light to moderate soiling without a pre-cleaning step.

Surfaces in LAFWs, BSCs, CAIs, and CACIs, which are intimate to the exposure of critical sites, require disinfecting more frequently than do housekeeping surfaces such as walls and ceilings. Disinfecting sterile compounding areas shall occur on a regular basis at the intervals noted in *Table 3* when spills occur, when the surfaces are visibly soiled, and when microbial contamination is known to have been or is suspected of having been introduced into the compounding areas.

When the surface to be disinfected has heavy soiling, a cleaning step is recommended prior to the application of the disinfectant. Trained compounding personnel are responsible for developing, implementing, and practicing the procedures for cleaning and disinfecting the DCAs written in the SOPs. Cleaning and disinfecting shall occur before compounding is performed. Items shall be removed from all areas to be cleaned, and surfaces shall be cleaned by removing loose material and residue from spills; for example, water-soluble solid residues are removed with sterile water (for injection or irrigation) and low-shedding wipes. This shall be followed by wiping with a residue-free disinfecting agent such as sterile 70% IPA, which is allowed to dry before compounding begins.

Cleaning and disinfecting surfaces in the LAFWs, BSCs, CAIs, and CACIs are the most critical practices before the preparation of CSPs. Consequently, such surfaces shall be cleaned and disinfected frequently, including at the beginning of each work shift, before each batch preparation is started, every 30 minutes during continuous compounding periods of individual CSPs, when there are spills, and when surface contamination is known or suspected from procedural breaches.

Work surfaces in the ISO Class 7 (see *Table 1*) buffer areas and ISO Class 8 (see *Table 1*) ante-areas as well as segregated compounding areas shall be cleaned and disinfected at least daily, and dust and debris shall be removed when necessary from storage sites for compounding ingredients and supplies using a method that does not degrade the ISO Class 7 or 8 (see *Table 1*) air quality (see *Disinfectants and Antiseptics* ⟨1072⟩).

Floors in the buffer or clean area, ante-area, and segregated compounding area are cleaned by mopping with a cleaning and disinfecting agent once daily at a time when no aseptic operations are in progress. Mopping shall be performed by trained personnel using approved agents and procedures described in the written SOPs. It is incumbent on compounding personnel

to ensure that such cleaning is performed properly. In the buffer or clean area, ante-area, and segregated compounding area, walls, ceilings, and shelving shall be cleaned and disinfected monthly. Cleaning and disinfecting agents are to be used with careful consideration of compatibilities, effectiveness, and inappropriate or toxic residues (see *Appendix II*). Their schedules of use and methods of application shall be in accordance with written SOPs and followed by custodial or compounding personnel.

All cleaning materials, such as wipers, sponges, and mops, shall be nonshedding, preferably composed of synthetic micro fibers, and dedicated to use in the buffer or clean area, ante-area, and segregated compounding areas and shall not be removed from these areas except for disposal. Floor mops may be used in both the buffer or clean area and ante-area, but only in that order. Ideally, all cleaning tools are discarded after one use by collection in suitable plastic bags and removed with minimal agitation. If cleaning materials (e.g., mops) are reused, procedures shall be developed (based on manufacturers' recommendations) that ensure that the effectiveness of the cleaning device is maintained and that repeated use does not add to the bioburden of the area being cleaned.

Supplies and equipment removed from shipping cartons shall be wiped with a suitable disinfecting agent (e.g., sterile 70% IPA) delivered from a spray bottle or other suitable delivery method. After the disinfectant is sprayed or wiped on a surface to be disinfected, the disinfectant shall be allowed to dry, during which time the item shall not be used for compounding purposes.

Wiping with small sterile 70% IPA swabs that are commercially available in individual foil-sealed packages (or a comparable method) is preferred for disinfecting entry points on bags and vials, allowing the IPA to dry before piercing stoppers with sterile needles and breaking necks of ampuls. The surface of the sterile 70% IPA swabs used for disinfecting entry points of sterile packages and devices shall not contact any other object before contacting the surface of the entry point. Sterile 70% IPA wetted gauze pads or other particle-generating material shall not be used to disinfect the sterile entry points of packages and devices.

When sterile supplies are received in sealed pouches designed to keep them sterile until opening, the sterile supplies may be removed from the covering pouches as the supplies are introduced into the ISO Class 5 (see *Table 1*) PEC (LAFW, BSC, CAI, CACI) without the need to disinfect the individual sterile supply items. No shipping or other external cartons may be taken into the buffer or clean area or segregated compounding area.

Personnel Cleansing and Garbing

The careful cleansing of hands and arms and the correct donning of PPE by compounding personnel constitute the first major step in preventing microbial contamination in CSPs. Personnel shall also be thoroughly competent and highly motivated to perform flawless aseptic manipulations with ingredients, devices, and components of CSPs. Squamous cells are normally shed from the human body at a rate of 10^6 or more per hour, and those skin particles are laden with microorganisms.[8,9] When individuals are experiencing rashes, sunburn, weeping sores, conjunctivitis, active respiratory infection, as well as when they wear cosmetics, they shed these particles at even higher rates. Particles shed from compounding personnel pose an increased risk of microbial contamination of critical sites of CSPs. Therefore, compounding personnel with such conditions as mentioned above shall be excluded from working in ISO Class 5 (see *Table 1*) and ISO Class 7 (see *Table 1*) compounding areas until their conditions are remedied.

Before entering the buffer area or segregated compounding area (see *Low-Risk Level CSPs with 12-Hour or Less BUD*), compounding personnel shall remove personal outer garments (e.g., bandannas, coats, hats, jackets, scarves, sweaters, vests); all cosmetics, because they shed flakes and particles; and all hand, wrist, and other visible jewelry or piercings (e.g., earrings, lip or eyebrow piercings) that can interfere with the effectiveness of PPE (e.g., fit of gloves and cuffs of sleeves). The wearing of artificial nails or extenders is prohibited while working in the sterile compounding environment. Natural nails shall be kept neat and trimmed.

Personnel shall don the following PPE in an order that proceeds from those activities considered the dirtiest to those considered the cleanest. Garbing activities considered the dirtiest include donning of dedicated shoes or shoe covers, head and facial hair covers (e.g., beard covers in addition to face masks), and face masks/eye shields. Eye shields are optional unless working with irritants such as germicidal disinfecting agents or when preparing hazardous drugs.

After donning dedicated shoes or shoe covers, head and facial hair covers, and face masks, a hand cleansing procedure shall be performed by removing debris from underneath fingernails using a nail cleaner under running warm water followed by vigorous hand washing. Hands and forearms shall be washed to the elbows for at least 30 seconds with soap (either nonantimicrobial or antimicrobial) and water while in the ante-area. The use of antimicrobial scrub brushes is not recommended because they can cause skin irritation and skin damage. Hands and forearms to the elbows will be completely dried using either lint-free disposable towels or an electronic hand dryer. After completion of hand washing, a nonshedding gown with sleeves that fit snugly around the wrists and enclosed at the neck is donned. Gowns designated for buffer area use shall be worn, and preferably they should be disposable. If reusable gowns are worn, they should be laundered appropriately for buffer area use.

Once inside the buffer area or segregated compounding area (see *Low-Risk Level CSPs with 12-Hour or Less BUD*), and prior to donning sterile powder-free gloves, antiseptic hand cleansing shall be performed using a waterless alcohol-based surgical hand

[8] Agalloco J, Akers JE. Aseptic Processing: A Vision of the Future. *Pharmaceutical Technology*, 2005. Aseptic Processing supplement, s16.

[9] Eaton T. Microbial Risk Assessment for Aseptically Prepared Products. *Am Pharm Rev*. 2005; 8 (5, Sep/Oct): 46–51.

scrub with persistent activity[10] following manufacturers' recommendations. Hands are allowed to dry thoroughly before donning sterile gloves.

Sterile gloves shall be the last item donned before compounding begins. Gloves become contaminated when they contact nonsterile surfaces during compounding activities. Disinfection of contaminated gloved hands may be accomplished by wiping or rubbing sterile 70% IPA to all contact surface areas of the gloves and letting the gloved hands dry thoroughly. Only use gloves that have been tested for compatibility with alcohol disinfection by the manufacturer. Routine application of sterile 70% IPA shall occur throughout the compounding process and whenever nonsterile surfaces (e.g. vials, counter tops, chairs, carts) are touched. Gloves on hands shall also be routinely inspected for holes, punctures, or tears and replaced immediately if such are detected. Antiseptic hand cleansing shall be performed as indicated above. Compounding personnel shall be trained and evaluated in the avoidance of touching critical sites.

When compounding personnel exit the compounding area during a work shift, the exterior gown may be removed and retained in the compounding area if not visibly soiled, to be re-donned during that same work shift only. However, shoe covers, hair and facial hair covers, face masks/eye shields, and gloves shall be replaced with new ones before re-entering the compounding area, and proper hand hygiene shall be performed.

During high-risk compounding activities that precede terminal sterilization, such as weighing and mixing of nonsterile ingredients, compounding personnel shall be garbed and gloved the same as when performing compounding in an ISO Class 5 (see *Table 1*) environment. Properly garbed and gloved compounding personnel who are exposed to air quality that is either known or suspected to be worse than ISO Class 7 (see *Table 1*) shall re-garb PPE along with washing their hands properly, performing antiseptic hand cleansing with a waterless alcohol-based surgical hand scrub, and donning sterile gloves upon reentering the ISO Class 7 (see *Table 1*) buffer area. When CAIs and CACIs are the source of the ISO Class 5 (see *Table 1*) environment, the garbing and gloving requirements for compounding personnel should be as described above, unless the isolator manufacturer can provide written documentation based on validated environmental testing that any component(s) of PPE or personnel cleansing are not required.

General Chapters

Personnel Training and Competency Evaluation of Garbing, Aseptic Work Practices, and Cleaning/Disinfection Procedures

Personnel who prepare CSPs shall be trained conscientiously and skillfully by expert personnel and through multimedia instructional sources and professional publications in the theoretical principles and practical skills of garbing procedures, aseptic work practices, achieving and maintaining ISO Class 5 (see *Table 1*) environmental conditions, and cleaning and disinfection procedures. This training shall be completed and documented before any compounding personnel begin to prepare CSPs. Compounding personnel shall complete didactic training, pass written competence assessments, undergo skill assessment using observational audit tools, and media-fill testing (see *Appendices III–V*).

Media-fill testing of aseptic work skills shall be performed initially before beginning to prepare CSPs and at least annually thereafter for low- and medium-risk level compounding and semiannually for high-risk level compounding.

Compounding personnel who fail written tests or observational audits or whose media-fill test vials have one or more units showing visible microbial contamination shall be re-instructed and re-evaluated by expert compounding personnel to ensure correction of all aseptic work practice deficiencies. Compounding personnel shall pass all evaluations prior to resuming compounding of sterile preparations. In addition to didactic evaluation and aseptic media fill, compounding personnel must demonstrate proficiency of proper hand hygiene, garbing, and consistent cleaning procedures.

In the event that cleaning and disinfecting procedures are also performed by other support personnel (e.g., institutional environmental services, housekeeping), thorough training of proper hand hygiene, garbing, and cleaning and disinfection procedures shall be done by a qualified aseptic compounding expert. After completion of training, support personnel shall routinely undergo performance evaluation of proper hand hygiene, garbing, and all applicable cleaning and disinfecting procedures conducted by a qualified aseptic compounding expert.

COMPETENCY EVALUATION OF GARBING AND ASEPTIC WORK PRACTICE

The risk of contaminating a CSP prepared under low-risk level and medium-risk level conditions is highly dependent on proper hand hygiene and garbing practices, compounding personnel aseptic technique, and the presence of surface contamination, assuming that all work is performed in a certified and properly functioning ISO Class 5 (see *Table 1*) PEC and secondary engineering controls, ISO Class 7 (see *Table 1*) buffer area, and ISO Class 8 (see *Table 1*) ante-area. High-risk level CSPs pose the greatest threat to patients because compounding personnel are tasked with the requirement of processing nonsterile components and devices in order to achieve sterility. Compounding personnel shall be evaluated initially prior to beginning compounding CSPs and whenever an aseptic media fill is performed using a form such as the *Sample Form for Assessing Hand Hygiene and Garbing Related Practices of Compounding Personnel* (see *Appendix III*) and the personnel glove fingertip sampling procedures indicated below.

Aseptic Work Practice Assessment and Evaluation via Personnel Glove Fingertip Sampling—Sampling of compounding personnel glove fingertips shall be performed for all CSP risk level compounding because direct touch contamination is the

[10] *Guideline for Hand Hygiene in Health care Settings,* MMWR, October 25, 2002, vol. 51, No. RR-16 available on the Internet at http://www.cdc.gov/handhygiene/.

most likely source of introducing microorganisms into CSPs prepared by humans. Glove fingertip sampling shall be used to evaluate the competency of personnel in performing hand hygiene and garbing procedures in addition to educating compounding personnel on proper work practices, which include frequent and repeated glove disinfection using sterile 70% IPA during actual compounding of CSPs. All personnel shall demonstrate competency in proper hand hygiene and garbing procedures and in aseptic work practices (e.g., disinfection of component surfaces, routine disinfection of gloved hands).

Sterile contact agar plates shall be used to sample the gloved fingertips of compounding personnel after garbing in order to assess garbing competency and after completing the media-fill preparation (without applying sterile 70% IPA) in order to assess the adequacy of aseptic work practices prior to being initially allowed to prepare CSPs for human use and for more experienced personnel to maintain their qualifications to prepare CSPs for human use.

Garbing And Gloving Competency Evaluation—Compounding personnel shall be visually observed during the process of performing hand hygiene and garbing procedures (see *Personnel Cleansing and Garbing* under *Personnel Training and Evaluation in Aseptic Manipulation Skills* above). The visual observation shall be documented on a form such as the *Sample Form for Assessing Hand Hygiene and Garbing Related Practices of Compounding Personnel* (see *Appendix III*) and maintained to provide a permanent record and long-term assessment of personnel competency.

Gloved Fingertip Sampling—All compounding personnel shall successfully complete an initial competency evaluation and gloved fingertip/thumb sampling procedure (zero cfu) no less than three times before initially being allowed to compound CSPs for human use. Immediately after the compounding employee completes the hand hygiene and garbing procedure (e.g., donning of sterile gloves prior to any disinfection with sterile 70% IPA), the evaluator will collect a gloved fingertip and thumb sample from both hands of the compounding employee onto appropriate agar plates by lightly pressing each fingertip into the agar. The plates will be incubated for the appropriate incubation period and at the appropriate temperature (see *Incubation Period*). After completing the initial gowning and gloving competency evaluation, re-evaluation of all compounding personnel for this competency shall occur at least annually for personnel who compound low- and medium-risk level CSPs and semi-annually for personnel who compound high-risk level CSPs using one or more sample collections during any media-fill test procedure before they are allowed to continue compounding CSPs for human use.

Immediately prior to sampling, gloves shall not be disinfected with sterile 70% IPA. Disinfecting gloves immediately before sampling will provide false negative results. Plates filled with nutrient agar with neutralizing agents such as lecithin and polysorbate 80 added shall be used when sampling personnel fingertips. Personnel shall "touch" the agar with the fingertips of both hands in separate plates in a manner to create a slight impression in the agar. The sampled gloves shall be immediately discarded and proper hand hygiene performed after sampling. The nutrient agar plates shall be incubated as stated below (see *Incubation Period*). Results should be reported separately as number of cfu per employee per hand (left hand, right hand). The cfu action level for gloved hands will be based on the total number of cfu on both gloves, not per hand.

Incubation Period—At the end of the designated sampling period for compounding personnel competency assessment activities (surface or personnel), the agar plates are recovered and covers secured and they are inverted and incubated at a temperature and for a time period conducive to multiplication of microorganisms. TSA with lecithin and polysorbate 80 shall be incubated at 30° to 35° for 48 to 72 hours.

Aseptic Manipulation Competency Evaluation—After successful completion of an initial Hand Hygiene and Garbing Competency Evaluation, all compounding personnel shall have their aseptic technique and related practice competency evaluated initially during the *Media-Fill Test Procedure* and subsequent annual or semi-annual *Media-Fill Test Procedures*. Records of these evaluations will be maintained using a form such as the *Sample Form for Assessing Aseptic Technique and Related Practices of Compounding Personnel* (see *Appendix IV*) and maintained to provide a permanent record of and long-term assessment of personnel competency.

Media-Fill Test Procedure—The skill of personnel to aseptically prepare CSPs shall be evaluated using sterile fluid bacterial culture media-fill verification, (i.e., sterile bacterial culture medium transfer via a sterile syringe and needle). Media-fill testing is used to assess the quality of the aseptic skill of compounding personnel. Media-fill tests shall represent the most challenging or stressful conditions actually encountered by the personnel being evaluated when they prepare low- and medium-risk level CSPs and when sterilizing high-risk level CSPs. Media-fill challenge tests are also used to verify the capability of the compounding environment and processes to produce sterile preparations.

A commercially available sterile fluid culture media, such as Soybean–Casein Digest Medium (see *Sterility Tests* 〈71〉), that is able to promote exponential colonization of bacteria that are most likely to be transmitted to CSPs from the compounding personnel and environment is commonly used. For high-risk level CSPs nonsterile commercially available Soybean–Casein Digest Medium may be used to make a 3% solution. Normal processing steps, including filter sterilization, shall be mimicked. Media-filled vials shall be incubated at 20° to 25° or at 30° to 35° for a minimum of 14 days. If two temperatures are used for incubation of media-filled samples, then these filled containers should be incubated for at least 7 days at each temperature (see *Microbiological Control and Monitoring of Aseptic Processing Environments* 〈1116〉). Failure is indicated by visible turbidity in any one of the media-fill units on or before 14 days. Other methodologies recommended by a competent microbiologist to enhance recovery time and sensitivity to detect microbial contamination may be considered (see *CSP Microbial Contamination Risk Levels* for examples of media-fill procedures).

SURFACE CLEANING AND DISINFECTION SAMPLING AND ASSESSMENT

Surface sampling is an important component of the maintenance of a suitable microbially controlled environment for compounding CSPs, especially since transfer of microbial contamination from improperly disinfected work surfaces via inadvertent touch contact by compounding personnel can be a potential source of contamination into CSPs. It is useful for evaluating facility and work surface cleaning and disinfecting procedures and employee competency in work practices such as disinfection of component/vial surface cleaning. Surface sampling shall be performed in all ISO classified areas on a periodic basis. Sampling can be accomplished using contact plates or swabs, and it shall be done at the conclusion of compounding. Locations to be sampled shall be defined in a sample plan or on a form. The size of the plate to be used for each sampled location usually ranges from 24 to 30 cm². Contact plates are filled with general solid agar growth medium and neutralizing agents above the rim of the plate, and they are used for sampling regular or flat surfaces. Swabs may be used for sampling irregular surfaces, especially for equipment (see *Microbiological Control and Monitoring of Aseptic Processing Environments* ⟨1116⟩).

Cleaning and Disinfecting Competency Evaluation—Compounding personnel and other personnel responsible for cleaning shall be visually observed during the process of performing cleaning and disinfecting procedures, during initial personnel training on cleaning procedures, during changes in cleaning staff, and at the completion of any media-fill test procedure (see *Cleaning and Disinfecting of Compounding Areas*).

The visual observation shall be documented using a form such as the *Sample Form for Assessing Cleaning and Disinfection Procedures* (see *Appendix V*) and maintained to provide a permanent record and long-term assessment of personnel competency.

Surface Collection Methods—To sample surfaces using a contact plate, gently touch the sample area with the agar surface and roll the plate across the surface to be sampled. The contact plate will leave a growth media residue behind; therefore, immediately after sampling with the contact plate, the sampled area shall be thoroughly wiped with a nonshedding wipe soaked in sterile 70% IPA.

If an area is sampled via the swab method, collection of the sample is processed by using appropriate procedures that will result in the surface location equivalent to that of a contact plate. After swabbing the surface to be sampled, swabs are placed in an appropriate diluent; an aliquot is planted on or in the specified nutrient agar. Results should be reported as cfu per unit of surface area.

Action Levels, Documentation, and Data Evaluation

The value of viable microbial monitoring of gloved fingertips and surfaces of components and the compounding environment are realized when the data are used to identify and correct an unacceptable work practice. Sampling data shall be collected and reviewed on a routine basis as a means of evaluating the overall control of the compounding environment. If an activity consistently shows elevated levels of microbial growth, competent microbiology personnel shall be consulted.

Any cfu count that exceeds its respective action level (see *Table 4*) should prompt a re-evaluation of the adequacy of personnel work practices, cleaning procedures, operational procedures, and air filtration efficiency within the aseptic compounding location. An investigation into the source of the contamination shall be conducted. Sources could include HVAC systems, damaged HEPA filters, and changes in personnel garbing or working practices. The source of the problem shall be eliminated, the affected area cleaned, and resampling performed.

When gloved fingertip sample results exceed action levels after proper incubation, a review of hand hygiene and garbing procedures as well as glove and surface disinfection procedures and work practices shall be performed and documented. Employee training may be required to correct the source of the problem.

Counts of cfu are to be used as an approximate measure of the environmental microbial bioburden. Action levels are determined on the basis of cfu data gathered at each sampling location and trended over time. The numbers in *Table 4* should be used only as guidelines. Regardless of the number of cfu identified in the compounding facility, further corrective actions will be dictated by the identification of microorganisms recovered (at least the genus level) by an appropriate credentialed laboratory of any microbial bioburden captured as a cfu using an impaction air sampler. Highly pathogenic microorganisms (e.g., Gram-negative rods, coagulase positive staphylococcus, molds and yeasts) can be potentially fatal to patients receiving CSPs and shall be immediately remedied, regardless of cfu count, with the assistance of a competent microbiologist, infection control professional, or industrial hygienist.

Table 4. Recommended Action Levels for Microbial Contamination*

Classification	Fingertip Sample	Surface Sample (Contact Plate) (cfu per plate)
ISO Class 5	> 3	> 3
ISO Class 7	N/A	> 5
ISO Class 8 or worse	N/A	> 100

* Pharmaceutical Inspection Co-operation Scheme (PIC/S) Guide to Good Manufacturing Practice for Medicinal Products Annexes PE 009-6, 5 April 2007.

SUGGESTED STANDARD OPERATING PROCEDURES (SOPS)

The compounding facility shall have written, properly approved SOPs designed to ensure the quality of the environment in which a CSP is prepared. The following procedures are recommended:

1. Access to the buffer area is restricted to qualified personnel with specific responsibilities or assigned tasks in the compounding area.
2. All cartoned supplies are decontaminated in the area by removing them from shipping cartons and wiping or spraying them with a nonresidue-generating disinfecting agent while they are being transferred to a clean and properly disinfected cart or other conveyance for introduction into the buffer area. Manufacturers' directions or published data for minimum contact time will be followed. Individual pouched sterile supplies need not be wiped because the pouches can be removed as these sterile supplies are introduced into the buffer area.
3. Supplies that are required frequently or otherwise needed close at hand but not necessarily needed for the scheduled operations of the shift are decontaminated and stored on shelving in the ante-area.
4. Carts used to bring supplies from the storeroom cannot be rolled beyond the demarcation line in the ante-area, and carts used in the buffer area cannot be rolled outward beyond the demarcation line unless cleaned and disinfected before returning.
5. Generally, supplies required for the scheduled operations of the shift are wiped down with an appropriate disinfecting agent and brought into the buffer area, preferably on one or more movable carts. Supplies that are required for back-up or general support of operations may be stored on the designated shelving in the buffer area, but excessive amounts of supplies are to be avoided.
6. Nonessential objects that shed particles shall not be brought into the buffer area, including pencils, cardboard cartons, paper towels, and cotton items (e.g., gauze pads).
7. Essential paper-related products (e.g., paper syringe overwraps, work records contained in a protective sleeve) shall be wiped down with an appropriate disinfecting agent prior to being brought into the buffer area.
8. Traffic flow in and out of the buffer area shall be minimized.
9. Personnel preparing to enter the buffer area shall remove all personal outer garments, cosmetics (because they shed flakes and particles), and all hand, wrist, and other visible jewelry or piercings that can interfere with the effectiveness of PPE.
10. Personnel entering the ante-area shall don attire as described in *Personnel Cleansing and Garbing* and *Personnel Training and Competency Evaluation of Garbing, Aseptic Work Practices and Cleaning/Disinfection Procedures*.
11. Personnel shall then thoroughly wash hands and forearms to the elbow with soap and water for at least 30 seconds. An air dryer or disposable nonshedding towels are used to dry hands and forearms after washing.
12. Personnel entering the buffer area shall perform antiseptic hand cleansing prior to donning sterile gloves using a waterless alcohol-based surgical hand scrub with persistent activity.
13. Chewing gum, drinks, candy, or food items shall not be brought into the buffer area or ante-area. Materials exposed in patient care and treatment areas shall never be introduced into areas where components and ingredients for CSPs are present.
14. At the beginning of each compounding activity session, and whenever liquids are spilled, the surfaces of the direct compounding environment are first cleaned with USP Purified Water to remove water-soluble residues. Immediately thereafter, the same surfaces are disinfected with a nonresidue-generating agent using a nonlinting wipe.
15. Primary engineering controls shall be operated continuously during compounding activity. When the blower is turned off and before other personnel enter to perform compounding activities, only one person shall enter the buffer area for the purposes of turning on the blower (for at least 30 minutes) and disinfecting the work surfaces.
16. Traffic in the area of the DCA is minimized and controlled.
17. Supplies used in the DCA for the planned procedures are accumulated and then decontaminated by wiping or spraying the outer surface with sterile 70% IPA or removing the outer wrap at the edge of the DCA as the item is introduced into the aseptic work area.
18. All supply items are arranged in the DCA so as to reduce clutter and provide maximum efficiency and order for the flow of work.
19. After proper introduction into the DCA of supply items required for and limited to the assigned operations, they are so arranged that a clear, uninterrupted path of HEPA-filtered air will bathe all critical sites at all times during the planned procedures. That is, no objects may be placed between the first air from HEPA filters and an exposed critical site.
20. All procedures are performed in a manner designed to minimize the risk of touch contamination. Gloves are disinfected with adequate frequency with an approved disinfectant such as sterile 70% IPA.
21. All rubber stoppers of vials and bottles and the necks of ampuls are disinfected by wiping with sterile 70% IPA and waiting for at least 10 seconds before they are used to prepare CSPs.
22. After the preparation of every CSP, the contents of the container are thoroughly mixed and then inspected for the presence of particulate matter, evidence of incompatibility, or other defects.
23. After procedures are completed, used syringes, bottles, vials, and other supplies are removed, but with a minimum of exit and re-entry into the DCA so as to minimize the risk of introducing contamination into the aseptic workspace.

ELEMENTS OF QUALITY CONTROL

A written description of specific training and performance evaluation program for individuals involved in the use of aseptic techniques for the preparation of sterile products shall be developed for each site. This program equips personnel with the appropriate knowledge and trains them in the required skills necessary to perform the assigned tasks. Each person assigned to the aseptic area in the preparation of sterile products shall successfully complete specialized training in aseptic techniques and aseptic area practices prior to preparing CSPs (see *Personnel Training and Evaluation in Aseptic Manipulation Skills* and *Personnel Training and Competency Evaluation of Garbing, Aseptic Work Practices and Cleaning/Disinfection Procedures*).

Ingredients and Devices

Compounding personnel ascertain that ingredients for CSPs are of the correct identity and appropriate quality using the following information: vendor labels, labeling, certificates of analysis, direct chemical analysis, and knowledge of compounding facility storage conditions.

STERILE INGREDIENTS AND DEVICES

Commercially available sterile drug products, sterile ready-to-use containers, and devices are examples of sterile components. A written procedure for unit-by-unit physical inspection preparatory to use is followed to ensure that these components are sterile, free from defects, and otherwise suitable for their intended use.

NONSTERILE INGREDIENTS AND DEVICES

If any nonsterile components, including containers and ingredients, are used to make a CSP, such CSPs must be high risk. Nonsterile active ingredients and added substances or excipients for CSPs should preferably be official *USP* or *NF* articles. When nonofficial ingredients are used, they shall be accompanied by certificates of analysis from their suppliers to aid compounding personnel in judging the identity, quality, and purity in relation to the intended use in a particular CSP. Physical inspection of a package of ingredients is necessary in order to detect breaks in the container, looseness in the cap or closure, and deviation from the expected appearance, aroma, and texture of the contents.

Bulk or unformulated drug substances and added substances or excipients shall be stored in tightly closed containers under temperature, humidity, and lighting conditions that are either indicated in official monographs or approved by suppliers. The date of receipt by the compounding facility shall be clearly and indelibly marked on each package of ingredient. After receipt by the compounding facility, packages of ingredients that lack a supplier's expiration date cannot be used after 1 year unless either appropriate inspection or testing indicates that the ingredient has retained its purity and quality for use in CSPs.

Careful consideration and evaluation of nonsterile ingredient sources is especially warranted when the CSP will be administered into the vascular system, central nervous system, or eyes.

Upon receipt of each lot of the bulk drug substance or excipient used for CSPs, the individual compounding the preparation performs a visual inspection of the lot for evidence of deterioration, other types of unacceptable quality, and wrong identification. For bulk drug substances or excipients, visual inspection is performed on a routine basis as described in the written protocol.

Equipment

It is necessary that equipment, apparatus, and devices used to compound a CSP be consistently capable of operating properly and within acceptable tolerance limits. Written procedures outlining required equipment calibration, annual maintenance, monitoring for proper function, and controlled procedures for use of the equipment and specified time frames for these activities are established and followed. Routine maintenance and frequencies shall be outlined in these SOPs. Results from the equipment calibration, annual maintenance reports, and routine maintenance are kept on file for the lifetime of the equipment. Personnel are prepared through an appropriate combination of specific training and experience to operate or manipulate any piece of equipment, apparatus, or device they may use when preparing CSPs. Training includes gaining the ability to determine whether any item of equipment is operating properly or is malfunctioning.

VERIFICATION OF AUTOMATED COMPOUNDING DEVICES (ACDs) FOR PARENTERAL NUTRITION COMPOUNDING

ACDs for the preparation of parenteral nutrition admixtures are widely used by pharmacists in hospitals and other healthcare settings. They are designed to streamline the labor-intensive processes involved in the compounding of these multiple-component formulations by automatically delivering the individual nutritional components in a predetermined sequence under computerized control. Parenteral nutrition admixtures often contain 20 or more individual additives representing as many as 50 or more individual components (e.g., 15 to 20 crystalline amino acids, dextrose monohydrate, and lipids; 10 to 12 electrolyte

salts; 5 to 7 trace minerals; and 12 vitamins). Thus, ACDs can provide improved accuracy and precision of the compounding process over the traditional manual compounding methods.

Accuracy

The accuracy of an ACD can be determined in various ways to ensure that the correct quantities of nutrients, electrolytes, or other nutritional components are delivered to the final infusion container. Initially, the ACD is tested for its volume and weight accuracy. For volume accuracy, a suitable volume of Sterile Water for Injection, USP, which represents a typical additive volume (e.g., 40 mL for small-volume range of 1 to 100 mL, 300 mL for large-volume range of 100 to 1000 mL), is programmed into the ACD and delivered to the appropriate volumetric container. The compounding personnel should then consult *Volumetric Apparatus* ⟨31⟩ for appropriate parameters to assess the volumetric performance of the ACD. For gravimetric accuracy, the balance used in conjunction with the ACD is tested using various weight sizes that represent the amounts typically used to deliver the various additives. Compounding personnel should consult *Balances* ⟨41⟩ for acceptable tolerances of the weights used. In addition, the same volume of *Sterile Water for Injection* used to assess volumetric accuracy is then weighed on the balance used in conjunction with the ACD. For example, if 40 mL of water was used in the volumetric assessment, its corresponding weight should be about 40 g (assuming the relative density of water is 1.0). In addition, during the use of the ACD, certain additives, such as potassium chloride (corrected for density differences), can also be tested in the same manner as with an in-process test.

Finally, additional tests of accuracy may be employed that determine the content of certain ingredients in the final volume of the parenteral nutrition admixture. Generally, pharmacy departments do not have the capability to routinely perform chemical analyses such as analyses of dextrose or electrolyte concentrations. Consequently, hospital or institutional laboratories may be called upon to perform these quality assurance tests. However, the methods in such laboratories are often designed for biological, not pharmaceutical, systems. Thus, their testing procedures shall be verified to meet the *USP* requirements stated in the individual monograph for the component being tested. For example, under *Dextrose Injection*, the following is stated: It contains not less than 95.0% and not more than 105.0% of the labeled amount of $C_6H_{12}O_6 \cdot H_2O$. The hospital or institutional chemistry laboratories must validate their methods to apply to this range and correct for their typical measurement of anhydrous dextrose versus dextrose monohydrate. Similar ranges and issues exist, for example, for injections of calcium gluconate, magnesium sulfate, and potassium chloride. The critical point is the use of *USP* references and possible laboratory procedural differences.

Precision

The intermediate precision of the ACD can be determined on the basis of the day-to-day variations in performance of the accuracy measures. Thus, compounding personnel shall keep a daily record of the above-described accuracy assessments and review the results over time. This review shall occur at least at weekly intervals to avoid potentially clinically significant cumulative errors over time. This is especially true for additives with a narrow therapeutic index, such as potassium chloride.

FINISHED PREPARATION RELEASE CHECKS AND TESTS

The following quality metrics shall be performed for all CSPs before they are dispensed or administered.

Inspection of Solution Dosage Forms and Review of Compounding Procedures

All CSPs that are intended to be solutions shall be visually examined for the presence of particulate matter and not administered or dispensed when such matter is observed. The prescription orders, written compounding procedure, preparation records, and expended materials used to make CSPs at all contamination risk levels are inspected for accuracy of correct identities and amounts of ingredients, aseptic mixing and sterilization, packaging, labeling, and expected physical appearance before they are administered or dispensed.

PHYSICAL INSPECTION

Finished CSPs are individually inspected in accordance with written procedures after compounding. If not distributed promptly, these CSPs are individually inspected just prior to leaving the storage area. Those CSPs that are not immediately distributed are stored in an appropriate location as described in the written procedures. Immediately after compounding, and as a condition of release, each CSP unit, where possible, should be inspected against lighted white or black background or both for evidence of visible particulates or other foreign matter. Prerelease inspection also includes container–closure integrity and any other apparent visual defect. CSPs with observed defects should be immediately discarded or marked and segregated from acceptable products in a manner that prevents their administration. When CSPs are not distributed promptly after preparation, a predistribution inspection is conducted to ensure that a CSP with defects, such as precipitation, cloudiness, and leakage, which may develop between the time of release and the time of distribution, is not released.

Compounding Accuracy Checks

Written procedures for double-checking compounding accuracy shall be followed for every CSP during preparation and immediately prior to release. The double-check system should meet state regulations and include label accuracy and accuracy of the addition of all drug products or ingredients used to prepare the finished product and their volumes or quantities. The used additive containers and, for those additives for which the entire container was not expended, the syringes used to measure the additive should be quarantined with the final products until the final product check is completed. Compounding personnel shall visually confirm that ingredients measured in syringes match the written order being compounded. Preferably, a person other than the compounder can verify that correct volumes of correct ingredients were measured to make each CSP. For example, compounding personnel would pull the syringe plunger back to the volume measured.

When practical, the accuracy of measurements is confirmed by weighing a volume of the measured fluid, then calculating that volume by dividing the weight by the accurate value of the density, or specific gravity, of the measured fluid. Correct density or specific gravity values programmed in ACDs, which measure by weight using the quotient of the programmed volume divided by the density or specific gravity, shall be confirmed to be accurate before and after delivering volumes of the liquids assigned to each channel or port. These volume accuracy checks and the following additional safety and accuracy checks in this section shall be included in the SOP manual of the CSP facility.

Sterility Testing

All high-risk level CSPs that are prepared in groups of more than 25 identical individual single-dose packages (e.g., ampuls, bags, syringes, vials) or in multiple-dose vials (MDVs) for administration to multiple patients or that are exposed longer than 12 hours at 2° to 8° and longer than 6 hours at warmer than 8° before they are sterilized shall meet the sterility test (see *Sterility Tests* ⟨71⟩) before they are dispensed or administered. The *Membrane Filtration* method is the method of choice where feasible (e.g., components are compatible with the membrane). A method not described in the *USP* may be used if verification results demonstrate that the alternative is at least as effective and reliable as the *USP Membrane Filtration* method or the *USP Direct Inoculation of the Culture Medium* method where the *Membrane Filtration* method is not feasible.

When high-risk level CSPs are dispensed before receiving the results of their sterility tests, there shall be a written procedure requiring daily observation of the incubating test specimens and immediate recall of the dispensed CSPs when there is any evidence of microbial growth in the test specimens. In addition, the patient and the physician of the patient to whom a potentially contaminated CSP was administered are notified of the potential risk. Positive sterility test results should prompt a rapid and systematic investigation of aseptic technique, environmental control, and other sterility assurance controls to identify sources of contamination and correct problems in the methods or processes.

Bacterial Endotoxin (Pyrogen) Testing

All high-risk level CSPs, except those for inhalation and ophthalmic administration, that are prepared in groups of more than 25 identical individual single-dose packages (e.g., ampuls, bags, syringes, vials) or in MDVs for administration to multiple patients or that are exposed longer than 12 hours at 2° to 8° and longer than 6 hours at warmer than 8° before they are sterilized shall be tested to ensure that they do not contain excessive bacterial endotoxins (see *Bacterial Endotoxins Test* ⟨85⟩ and *Pyrogen Test* ⟨151⟩). In the absence of a bacterial endotoxins limit in the official monograph or other CSP formula source, the CSP shall not exceed the amount of USP Endotoxin Units (per hour per kilogram of body weight or square meters of body surface area) specified in *Bacterial Endotoxins Test* ⟨85⟩ referenced above for the appropriate route of administration.

Identity and Strength Verification of Ingredients

Compounding facilities shall have at least the following written procedures for verifying the correct identity and quality of CSPs before they are dispensed and administered:

1. That labels of CSPs bear correct names and amounts or concentrations of ingredients, the total volume, the BUD, the appropriate route(s) of administration, the storage conditions, and other information for safe use.
2. That there are correct identities, purities, and amounts of ingredients by comparing the original written order with the written compounding record for the CSP.
3. That correct fill volumes in CSPs and correct quantities of filled units of the CSPs were obtained. When the strength of finished CSPs cannot be confirmed to be accurate, based on the above three inspections, the CSPs shall be assayed by methods that are specific for the active ingredients.

Change to read:

STORAGE AND BEYOND-USE DATING

BUDs for compounded preparations are usually assigned on the basis of professional experience, which should include careful interpretation of appropriate information sources for the same or similar formulations (see *Stability Criteria and Beyond-Use*

General Chapters

Dating under *Pharmaceutical Compounding—Nonsterile Preparations* ⟨795⟩). BUDs for CSPs are rarely based on preparation-specific chemical assay results, which are used with the Arrhenius equation to determine expiration dates (see *General Notices and Requirements*) for manufactured products. The majority of CSPs are aqueous solutions in which hydrolysis of dissolved ingredients is the most common chemical degradation reaction. The extent of hydrolysis and other heat-catalyzed degradation reactions at any particular time point in the life of a CSP represents the thermodynamic sum of exposure temperatures and durations. Such lifetime stability exposure is represented in the mean kinetic temperature calculation (see ●*Pharmaceutical Calculations in Pharmacy Practice* ⟨1160⟩● (CN 1-May-2017)). Drug hydrolysis rates increase exponentially with arithmetic temperature increase; thus, exposure of a beta-lactam antibiotic solution for 1 day at controlled room temperature (see *General Notices and Requirements*) will have an equivalent effect on the extent of hydrolysis of approximately 3 to 5 days in cold temperatures (see *General Notices and Requirements*).

Personnel who prepare, dispense, and administer CSPs shall store them strictly in accordance with the conditions stated on the label of ingredient products and finished CSPs. When CSPs are known to have been exposed to temperatures warmer than the warmest labeled limit or to temperatures exceeding 40° (see *General Notices and Requirements*) for more than 4 hours, such CSPs should be discarded unless direct assay data or appropriate documentation confirms their continued stability.

Determining Beyond-Use Dates

BUDs and expiration dates are not the same (see *General Notices and Requirements*). Expiration dates for the chemical and physical stability of manufactured sterile products are determined from results of rigorous analytical and performance testing, and they are specific for a particular formulation in its container and at stated exposure conditions of illumination and temperature. When CSPs deviate from conditions in the approved labeling of manufactured products contained in CSPs, compounding personnel may consult the manufacturer of particular products for advice on assigning BUDs based on chemical and physical stability parameters. BUDs for CSPs that are prepared strictly in accordance with manufacturers' product labeling shall be those specified in that labeling or from appropriate literature sources or direct testing. BUDs for CSPs that lack justification from either appropriate literature sources or by direct testing evidence shall be assigned as described in *Stability Criteria and Beyond-Use Dating* under *Pharmaceutical Compounding—Nonsterile Preparations* ⟨795⟩.

In addition, compounding personnel may refer to applicable publications to obtain relevant stability, compatibility, and degradation information regarding the drug or its congeners. When assigning a beyond-use date, compounding personnel should consult and apply drug-specific and general stability documentation and literature where available, and they should consider the nature of the drug and its degradation mechanism, the container in which it is packaged, the expected storage conditions, and the intended duration of therapy (see *Expiration Date and Beyond-Use Date* under *Labeling* in the *General Notices and Requirements*). Stability information must be carefully interpreted in relation to the actual compounded formulation and conditions for storage and use. Predictions based on other evidence, such as publications, charts, and tables, would result in theoretical BUDs. Theoretically predicted beyond-use dating introduces varying degrees of assumptions and, hence, a likelihood of error or at least inaccuracy. The degree of error or inaccuracy would be dependent on the extent of differences between the CSPs' characteristics (e.g., composition, concentration of ingredients, fill volume, container type and material) and the characteristics of the products from which stability data or information is to be extrapolated. The greater the doubt of the accuracy of theoretically predicted beyond-use dating, the greater the need to determine dating periods experimentally. Theoretically predicted beyond-use dating periods should be carefully considered for CSPs prepared from nonsterile bulk active ingredients having therapeutic activity, especially where these CSPs are expected to be compounded routinely. When CSPs will be distributed to and administered in residential locations other than healthcare facilities, the effect of potentially uncontrolled and unmonitored temperature conditions shall be considered when assigning BUDs. It must be ascertained that CSPs will not be exposed to warm temperatures (see *General Notices and Requirements*) unless the compounding facility has evidence to justify stability of CSPs during such exposure.

It should be recognized that the truly valid evidence of stability for predicting beyond-use dating can be obtained only through product-specific experimental studies. Semiquantitative procedures such as thin-layer chromatography (TLC) may be acceptable for many CSPs. However, quantitative stability-indicating assays such as high-performance liquid chromatographic (HPLC) assays would be more appropriate for certain CSPs. Examples include CSPs with a narrow therapeutic index, where close monitoring or dose titration is required to ensure therapeutic effectiveness and to avoid toxicity; where a theoretically established beyond-use dating period is supported by only marginal evidence; or where a significant margin of safety cannot be verified for the proposed beyond-use dating period. In short, because beyond-use dating periods established from product-specific data acquired from the appropriate instrumental analyses are clearly more reliable than those predicted theoretically, the former approach is strongly urged to support dating periods exceeding 30 days.

To ensure consistent practices in determining and assigning BUDs, the compounding facility should have written policies and procedures governing the determination of the BUDs for all compounded products. When attempting to predict a theoretical BUD, a compounded or an admixed preparation should be considered as a unique system that has physical and chemical properties and stability characteristics that differ from its components. For example, antioxidant, buffering, or antimicrobial properties of a sterile vial for injection (SVI) might be lost upon its dilution, with the potential of seriously compromising the chemical stability of the SVI's active ingredient or the physical or microbiological stability of the SVI formulation in general. Thus, the properties stabilized in the SVI formulation usually cannot be expected to be carried over to the compounded or

General Chapters

admixed preparation. Preparation-specific, experimentally determined stability data evaluation protocols are preferable to published stability information.

Compounding personnel who assign BUDs to CSPs when lacking direct chemical assay results must critically interpret and evaluate the most appropriate available information sources to determine a conservative and safe BUD. The SOP manual of the compounding facility and each specific CSP formula record shall describe the general basis used to assign the BUD and storage conditions.

When manufactured MDVs (see *Multiple-Dose Container* under *Preservation, Packaging, Storage,* and *Labeling* in the *General Notices and Requirements*) of sterile ingredients are used in CSPs, the stoppers of the MDVs are inspected for physical integrity and disinfected by wiping with a sterile 70% IPA swab before each penetration with a sterile withdrawal device. When contaminants or abnormal properties are suspected or observed in MDVs, such MDVs shall be discarded. The BUD after initially entering or opening (e.g., needle puncturing) multiple-dose containers is 28 days (see *Antimicrobial Effectiveness Testing* 〈51〉) unless otherwise specified by the manufacturer.

Proprietary Bag and Vial Systems

The sterility storage and stability beyond-use times for attached and activated (where activated is defined as allowing contact of the previously separate diluent and drug contents) container pairs of drug products for intravascular administration (e.g., ADD-Vantage®, Mini Bag Plus®) shall be applied as indicated by the manufacturer. In other words, follow manufacturers' instructions for handling and storing ADD-Vantage®, Mini Bag Plus®, Add A Vial®, Add-Ease® products, and any others.

Monitoring Controlled Storage Areas

To ensure that product potency is retained through the manufacturer's labeled expiration date, compounding personnel shall monitor the drug storage areas within the compounding facility. Controlled temperature areas in compounding facilities include controlled room temperature, 20° to 25° with mean kinetic temperature 25°; controlled cold temperature, 2° to 8° with mean kinetic temperature 8°; cold temperature, 2° to 8°; freezing temperature, −25° and −10° (see *General Notices and Requirements)* if needed to achieve freezing, and the media-specific temperature range for microbial culture media. A controlled temperature area shall be monitored at least once daily and the results documented on a temperature log. Additionally, compounding personnel shall note the storage temperature when placing the product into or removing the product from the storage unit in order to monitor any temperature aberrations. Suitable temperature recording devices may include a calibrated continuous recording device or a National Institute of Standards and Technology (NIST) calibrated thermometer that has adequate accuracy and sensitivity for the intended purpose, and it shall be properly calibrated at suitable intervals. If the compounding facility uses a continuous temperature recording device, compounding personnel shall verify at least once daily that the recording device itself is functioning properly.

The temperature-sensing mechanisms shall be suitably placed in the controlled temperature storage space to reflect accurately its true temperature. In addition, the compounding facility shall adhere to appropriate procedures of all controlled storage spaces to ensure that such spaces are not subject to significantly prolonged temperature fluctuations as may occur, for example, by leaving a refrigerator door open too long.

MAINTAINING STERILITY, PURITY, AND STABILITY OF DISPENSED AND DISTRIBUTED CSPS

This section summarizes the responsibilities of compounding facilities for maintaining quality and control of CSPs that are dispensed and administered within their parent healthcare organizations.

Compounding personnel shall ensure proper storage and security of CSPs prepared by or dispensed from the compounding facility until either their BUDs are reached or they are administered to patients. In fulfilling this general responsibility, the compounding facility is responsible for the proper packaging, handling, transport, and storage of CSPs prepared by or dispensed from it, including the appropriate education, training, and supervision of compounding personnel assigned to these functions. The compounding facility should assist in the education and training of noncompounding personnel responsible for carrying out any aspect of these functions.

Establishing, maintaining, and ensuring compliance with comprehensive written policies and procedures encompassing these responsibilities is a further responsibility of the compounding facility. Where noncompounding personnel are assigned tasks involving any of these responsibilities, the policies and procedures encompassing those tasks should be developed by compounding supervisors. The quality and control activities related to distribution of CSPs are summarized in the following five subsections. Activities or concerns that should be addressed as the compounding facility fulfills these responsibilities are as follows.

Packaging, Handling, and Transport

Inappropriate processes or techniques involved with packaging, handling, and transport can adversely affect quality and package integrity of CSPs. Although compounding personnel routinely perform many of the tasks associated with these func-

tions, some tasks, such as transport, handling, and placement into storage, may be fulfilled by noncompounding personnel who are not under the direct administrative control of the compounding facility. Under these circumstances, appropriate SOPs shall be established by the compounding facility with the involvement of other departments or services whose personnel are responsible for carrying out those CSP-related functions for which the compounding facility has a direct interest. The performance of the noncompounding personnel is monitored for compliance to established policies and procedures.

The critical requirements that are unique to CSPs and that are necessary to ensure CSP quality and packaging integrity shall be addressed in SOPs. For example, techniques should be specified to prevent the depression of syringe plungers or dislodging of syringe tips during handling and transport. Additionally, disconnection of system components (e.g., where CSPs are dispensed with administration sets attached to them) shall be prevented through the BUD of the CSP. Foam padding or inserts are particularly useful where CSPs are transported by pneumatic tube systems. Regardless of the methods used, the compounding facility must evaluate their effectiveness and the reliability of the intended protection. Evaluation should be continuous—for example, through a surveillance system, including a system of problem reporting to the compounding facility.

Inappropriate transport and handling can adversely affect the quality of certain CSPs having unique stability concerns. For example, the physical shaking that might occur during pneumatic tube transport or undue exposure to heat or light must be addressed on a preparation-specific basis. Alternative transport modes or special packaging measures might be needed for the proper assurance of quality of these CSPs. The use of tamper-evident closures and seals on CSP ports can add an additional measure of security to ensure product integrity regardless of the transport method used.

Chemotoxic and other hazardous CSPs require safeguards to maintain the integrity of the CSP and to minimize the exposure potential of these products to the environment and to personnel who may come in contact with them. Transportation by pneumatic tube should be discouraged because of potential breakage and contamination. Special requirements associated with the packaging, transport, and handling of these agents include the prevention of accidental exposures or spills and the training of personnel in the event of an exposure or spill. Examples of special requirements of these agents also include exposure-reducing strategies such as the use of Luer lock syringes and connections, syringe caps, the capping of container ports, sealed plastic bags, impact-resistant containers, and cautionary labeling.

Use and Storage

The compounding facility is responsible for ensuring that CSPs in the patient-care setting maintain their quality until administered. The immediate labeling of the CSP container will display prominently and understandably the requirements for proper storage and expiration dating. Delivery and patient-care-setting personnel shall be properly trained to deliver the CSP to the appropriate storage location. Outdated and unused CSPs shall be returned to the compounding facility for disposition.

SOPs must exist to ensure that storage conditions in the patient-care setting are suitable for the CSP-specific storage requirements. Procedures include daily monitoring and documentation of drug storage refrigerators to ensure temperatures between 2° and 8° and the monthly inspection of all drug storage locations by compounding personnel. Inspections shall confirm compliance with appropriate storage conditions, separation of drugs and food, proper use of MDVs, and the avoidance of using single-dose products as MDVs. CSPs, as well as all other drug products, shall be stored in the patient-care area in such a way as to secure them from unauthorized personnel, visitors, and patients.

Readying for Administration

Procedures essential for generally ensuring quality, especially sterility assurance, when readying a CSP for its subsequent administration include proper hand washing, aseptic technique, site care, and change of administration sets. Additional procedures may also be essential for certain CSPs, devices, or techniques. Examples where such special procedures are needed include in-line filtration, the operation of automated infusion control devices, and the replenishment of CSPs into the reservoirs of implantable or portable infusion pumps. When CSPs are likely to be exposed to warmer than 30° for more than 1 hour during their administration to patients, the maintenance of their sterility and stability should be confirmed from either relevant and reliable sources or direct testing.

Redispensed CSPs

The compounding facility shall have the sole authority to determine when unopened, returned CSPs may be redispensed. Returned CSPs may be redispensed only when personnel responsible for sterile compounding can ensure that such CSPs are sterile, pure, and stable (contain labeled strength of ingredients). The following may provide such assurance: the CSPs were maintained under continuous refrigeration and protected from light, if required, and no evidence of tampering or any readying for use outside the compounding facility exists. Assignment of new storage times and BUDs that exceed the original dates for returned CSPs is permitted only when there is supporting evidence from sterility testing and quantitative assay of ingredients. Thus, initial preparation and thaw times should be documented and reliable measures should have been taken to prevent and detect tampering. Compliance with all procedures associated with maintaining product quality is essential. The CSPs shall not be redispensed if there is not adequate assurance that preparation quality and packaging integrity (including the connec-

tions of devices, where applicable) were continuously maintained between the time the CSPs left and the time they were returned. Additionally, CSPs shall not be redispensed if redispensing cannot be supported by the originally assigned BUD.

Education and Training

The assurance of CSPs' quality and packaging integrity is highly dependent on the proper adherence of all personnel to the pertinent SOPs. Compounding personnel shall design, implement, and maintain a formal education, training, and competency assessment program that encompasses all the functions and tasks addressed in the foregoing sections and all personnel to whom such functions and tasks are assigned. This program includes the assessment and documentation of procedural breaches, administration mishaps, side effects, allergic reactions, and complications associated with dosage or administration, such as extravasation. This program should be coordinated with the institution's adverse-events and incident reporting programs.

Packing and Transporting CSPs

The following sections describe how to maintain sterility and stability of CSPs until they are delivered to patient care locations for administration.

PACKING CSPS FOR TRANSIT

When CSPs are distributed to locations outside the premises in which they are compounded, compounding personnel select packing containers and materials that are expected to maintain physical integrity, sterility, and stability of CSPs during transit. Packing is selected that simultaneously protects CSPs from damage, leakage, contamination, and degradation, and protects personnel who transport packed CSPs from harm. The SOP manual of the compounding facility specifically describes appropriate packing containers and insulating and stuffing materials, based on information from product specifications, vendors, and experience of compounding personnel. Written instructions that clearly explain how to safely open containers of packed CSPs are provided to patients and other recipients.

TRANSIT OF CSPS

Compounding facilities that ship CSPs to locations outside their own premises shall select modes of transport that are expected to deliver properly packed CSPs in undamaged, sterile, and stable condition to recipients.

Compounding personnel should ascertain that temperatures of CSPs during transit by the selected mode will not exceed the warmest temperature specified on the storage temperature range on CSP labels. It is recommended that compounding personnel communicate directly with the couriers to learn shipping durations and exposure conditions that CSPs may encounter.

Compounding personnel shall include specific handling and exposure instructions on the exteriors of containers packed with CSPs to be transported and obtain reasonable assurance of compliance therewith from transporters. Compounding personnel shall periodically review the delivery performance of couriers to ascertain that CSPs are being efficiently and properly transported.

Storage in Locations Outside Compounding Facilities

Compounding facilities that ship CSPs to patients and other recipients outside their own premises shall ascertain or provide, whichever is appropriate, the following assurances:

1. Labels and accessory labeling for CSPs include clearly readable BUDs, storage instructions, and disposal instructions for out-of-date units.
2. Each patient or other recipient is able to store the CSPs properly, including the use of a properly functioning refrigerator and freezer if CSPs are labeled for such storage.

PATIENT OR CAREGIVER TRAINING

A formal training program is provided as a means to ensure understanding and compliance with the many special and complex responsibilities placed on the patient or caregiver for the storage, handling, and administration of CSPs. The instructional objectives for the training program include all home care responsibilities expected of the patient or caregiver and is specified in terms of patient or caregiver competencies.

Upon the conclusion of the training program, the patient or caregiver should, correctly and consistently, be able to do the following:

1. Describe the therapy involved, including the disease or condition for which the CSPs are prescribed, goals of therapy, expected therapeutic outcome, and potential side effects of the CSPs.
2. Inspect all drug products, CSPs, devices, equipment, and supplies on receipt to ensure that proper temperatures were maintained during transport and that goods received show no evidence of deterioration or defects.

3. Handle, store, and monitor all drug products, CSPs, and related supplies and equipment in the home, including all special requirements related to same.
4. Visually inspect all drug products, CSPs, devices, and other items the patient or caregiver is required to use immediately prior to administration in a manner to ensure that all items are acceptable for use. For example, CSPs must be free from leakage, container cracks, particulates, precipitate, haziness, discoloration, or other deviations from the normal expected appearance, and the immediate packages of sterile devices must be completely sealed, with no evidence of loss of package integrity.
5. Check labels immediately prior to administration to ensure the right drug, dose, patient, and time of administration.
6. Clean the in-home preparation area, scrub hands, use proper aseptic technique, and manipulate all containers, equipment, apparatus, devices, and supplies used in conjunction with administration.
7. Employ all techniques and precautions associated with CSP administration; for example, preparing supplies and equipment, handling of devices, priming the tubing, and discontinuing an infusion.
8. Care for catheters, change dressings, and maintain site patency as indicated.
9. Monitor for and detect occurrences of therapeutic complications such as infection, phlebitis, electrolyte imbalance, and catheter misplacement.
10. Respond immediately to emergency or critical situations such as catheter breakage or displacement, tubing disconnection, clot formation, flow blockage, and equipment malfunction.
11. Know when to seek and how to obtain professional emergency services or professional advice.
12. Handle, contain, and dispose of wastes, such as needles, syringes, devices, biohazardous spills or residuals, and infectious substances.

Training programs include a hands-on demonstration and practice with actual items that the patient or caregiver is expected to use, such as CSP containers, devices, and equipment. The patient or caregiver practices aseptic and injection technique under the direct observation of a health professional.

The compounding facility, in conjunction with nursing or medical personnel, is responsible for ensuring initially and on an ongoing basis that the patient or caregiver understands, has mastered, and is capable of and willing to comply with all of these home care responsibilities. This is achieved through a formal, written assessment program. All specified competencies in the patient or caregiver training program are formally assessed. The patient or caregiver is expected to demonstrate to appropriate healthcare personnel mastery of assigned activities before being allowed to administer CSPs unsupervised by a health professional.

Printed material such as checklists or instructions provided during training may serve as continuing post-training reinforcement of learning or as reminders of specific patient or caregiver responsibilities. Post-training verbal counseling can also be used periodically, as appropriate, to reinforce training and to ensure continuing correct and complete fulfillment of responsibilities.

PATIENT MONITORING AND ADVERSE EVENTS REPORTING

Compounding facilities shall clinically monitor patients treated with CSPs according to the regulations and guidelines of their respective state healthcare practitioner licensure boards or of accepted standards of practice. Compounding facilities shall provide patients and other recipients of CSPs with a way to address their questions and report any concerns that they may have with CSPs and their administration devices.

The SOP manuals of compounding facilities shall describe specific instructions for receiving, acknowledging, and dating receipts, and for recording, or filing, and evaluating reports of adverse events and of the quality of preparation claimed to be associated with CSPs. Reports of adverse events with CSPs shall be reviewed promptly and thoroughly by compounding supervisors to correct and prevent future occurrences. Compounding personnel are encouraged to participate in adverse event reporting and product defects programs of the FDA and USP.

QUALITY ASSURANCE (QA) PROGRAM

A provider of CSPs shall have in place a formal QA program intended to provide a mechanism for monitoring, evaluating, correcting, and improving the activities and processes described in this chapter. Emphasis in the QA program is placed on maintaining and improving the quality of systems and the provision of patient care. In addition, the QA program ensures that any plan aimed at correcting identified problems also includes appropriate follow-up to make certain that effective corrective actions were performed.[11]

Characteristics of a QA program include the following:
1. Formalization in writing;
2. Consideration of all aspects of the preparations and dispensing of products as described in this chapter, including environmental testing and verification results;
3. Description of specific monitoring and evaluation activities;

[11] The use of additional resources, such as the Accreditation Manual for Home Care from the Joint Commission on Accreditation of Healthcare Organizations, may prove helpful in the development of a QA plan.

4. Specification of how results are to be reported and evaluated;
5. Identification of appropriate follow-up mechanisms when action limits or thresholds are exceeded; and
6. Delineation of the individuals responsible for each aspect of the QA program.

In developing a specific plan, focus is on establishing objective, measurable indicators for monitoring activities and processes that are deemed high risk, high volume, or problem prone. In general, the selection of indicators and the effectiveness of the overall QA program is reassessed on an annual basis.

ABBREVIATIONS AND ACRONYMS

ACD	automated compounding device
ACPH	air changes per hour
ALARA	as low as reasonably achievable
ASHRAE	American Society of Heating, Refrigerating and Air-Conditioning Engineers
BI	biological indicator
BSC	biological safety cabinet
BUD	beyond-use date
CACI	compounding aseptic containment isolator
CAI	compounding aseptic isolator
CDC	Centers for Disease Control and Prevention
CETA	Controlled Environment Testing Association
cfu	colony-forming unit(s)
CSP	compounded sterile preparation
CSTD	closed-system vial-transfer device
DCA	direct compounding area
ECV	endotoxin challenge vial
EU	Endotoxin Unit
FDA	Food and Drug Administration
HEPA	high efficiency particulate air
HICPAC	Healthcare Infection Control Practices Advisory Committee
HVAC	heating, ventilation, and air conditioning
IPA	isopropyl alcohol
ISO	International Organization for Standardization
LAFW	laminar airflow workbench
MDVs	multiple-dose vials
MMWR	Morbidity and Mortality Weekly Report
NIOSH	National Institute for Occupational Safety and Health
NIST	National Institute of Standards and Technology
PEC	primary engineering control
PET	positron emission tomography
PPE	personnel protective equipment
psi	pounds per square inch
QA	quality assurance
SOP	standard operating procedure
SVI	sterile vial for injection
TSA	trypticase soy agar
USP	United States Pharmacopeia

GLOSSARY

Ante-Area: An ISO Class 8 (see *Table 1*) or better area where personnel hand hygiene and garbing procedures, staging of components, order entry, CSP labeling, and other high-particulate-generating activities are performed. It is also a transition area that (1) provides assurance that pressure relationships are constantly maintained so that air flows from clean to dirty areas and (2) reduces the need for the heating, ventilating, and air-conditioning (HVAC) control system to respond to large disturbances.[12]

General Chapters

[12] See *American Society of Heating, Refrigerating and Air-Conditioning Engineers, Inc. (ASHRAE), Laboratory Design Guide.*

Aseptic Processing: (see *Microbiological Control and Monitoring of Aseptic Processing Environments* ⟨1116⟩) A mode of processing pharmaceutical and medical products that involves the separate sterilization of the product and of the package (containers–closures or packaging material for medical devices) and the transfer of the product into the container and its closure under at least ISO Class 5 (see *Table 1*) conditions.

Beyond-Use Date (BUD): (see *General Notices and Requirements* and *Pharmaceutical Compounding—Nonsterile Preparations* ⟨795⟩) For the purpose of this chapter, the date or time after which a CSP shall not be stored or transported. The date is determined from the date or time the preparation is compounded.

Biological Safety Cabinet (BSC): A ventilated cabinet for CSPs, personnel, product, and environmental protection having an open front with inward airflow for personnel protection, downward high-efficiency particulate air (HEPA)-filtered laminar airflow for product protection, and HEPA-filtered exhausted air for environmental protection.

Buffer Area: An area where the primary engineering control (PEC) is physically located. Activities that occur in this area include the preparation and staging of components and supplies used when compounding CSPs.

Clean Room: (see *Microbiological Control and Monitoring of Aseptic Processing Environments* ⟨1116⟩ and also the definition of *Buffer Area*) A room in which the concentration of airborne particles is controlled to meet a specified airborne particulate cleanliness class. Microorganisms in the environment are monitored so that a microbial level for air, surface, and personnel gear are not exceeded for a specified cleanliness class.

Compounding Aseptic Containment Isolator (CACI): A compounding aseptic isolator (CAI) designed to provide worker protection from exposure to undesirable levels of airborne drug throughout the compounding and material transfer processes and to provide an aseptic environment for compounding sterile preparations. Air exchange with the surrounding environment should not occur unless the air is first passed through a microbial retentive filter (HEPA minimum) system capable of containing airborne concentrations of the physical size and state of the drug being compounded. Where volatile hazardous drugs are prepared, the exhaust air from the isolator should be appropriately removed by properly designed building ventilation.

Compounding Aseptic Isolator (CAI): A form of isolator specifically designed for compounding pharmaceutical ingredients or preparations. It is designed to maintain an aseptic compounding environment within the isolator throughout the compounding and material transfer processes. Air exchange into the isolator from the surrounding environment should not occur unless the air has first passed through a microbially retentive filter (HEPA minimum).[13]

Critical Area: An ISO Class 5 (see *Table 1*) environment.

Critical Site: A location that includes any component or fluid pathway surfaces (e.g., vial septa, injection ports, beakers) or openings (e.g., opened ampuls, needle hubs) exposed and at risk of direct contact with air (e.g., ambient room or HEPA filtered), moisture (e.g., oral and mucosal secretions), or touch contamination. Risk of microbial particulate contamination of the critical site increases with the size of the openings and exposure time.

Direct Compounding Area (DCA): A critical area within the ISO Class 5 (see *Table 1*) primary engineering control (PEC) where critical sites are exposed to unidirectional HEPA-filtered air, also known as first air.

Disinfectant: An agent that frees from infection, usually a chemical agent but sometimes a physical one, and that destroys disease-causing pathogens or other harmful microorganisms but may not kill bacterial and fungal spores. It refers to substances applied to inanimate objects.

First Air: The air exiting the HEPA filter in a unidirectional air stream that is essentially particle free.

Hazardous Drugs: Drugs are classified as hazardous if studies in animals or humans indicate that exposures to them have a potential for causing cancer, development or reproductive toxicity, or harm to organs. (See current NIOSH publication.)

Labeling: [see *General Notices and Requirements* and 21 USC 321 (k) and (m)] A term that designates all labels and other written, printed, or graphic matter on an immediate container of an article or preparation or on, or in, any package or wrapper in which it is enclosed, except any outer shipping container. The term "label" designates that part of the labeling on the immediate container.

Media-Fill Test: (see *Microbiological Control and Monitoring of Aseptic Processing Environments* ⟨1116⟩) A test used to qualify aseptic technique of compounding personnel or processes and to ensure that the processes used are able to produce sterile product without microbial contamination. During this test, a microbiological growth medium such as Soybean–Casein Digest Medium is substituted for the actual drug product to simulate admixture compounding.[1] The issues to consider in the development of a media-fill test are media-fill procedures, media selection, fill volume, incubation, time and temperature, inspection of filled units, documentation, interpretation of results, and possible corrective actions required.

Multiple-Dose Container: (see *General Notices and Requirements* and ⟨659⟩) A multiple-unit container for articles or preparations intended for parenteral administration only and usually containing antimicrobial preservatives. The beyond-use date (BUD) for an opened or entered (e.g., needle-punctured) multiple-dose container with antimicrobial preservatives is 28 days (see *Antimicrobial Effectiveness Testing* ⟨51⟩), unless otherwise specified by the manufacturer.

Negative Pressure Room: A room that is at a lower pressure than the adjacent spaces and, therefore, the net flow of air is *into* the room.[12]

Pharmacy Bulk Package: (see ⟨659⟩) A container of a sterile preparation for parenteral use that contains many single doses. The contents are intended for use in a pharmacy admixture program and are restricted to the preparation of admixtures for infusion or, through a sterile transfer device, for the filling of empty sterile syringes. The closure shall be penetrated only

[13] *CETA Applications Guide for the Use of Compounding Isolators in Compounding Sterile Preparations in Healthcare Facilities*, CAG-001-2005, Controlled Environment Testing Association (CETA), November 8, 2005.

one time after constitution with a suitable sterile transfer device or dispensing set, which allows measured dispensing of the contents. The pharmacy bulk package is to be used only in a suitable work area such as a laminar flow hood (or an equivalent clean air compounding area).

Where a container is offered as a pharmacy bulk package, the label shall (a) state prominently "Pharmacy Bulk Package—Not for Direct Infusion," (b) contain or refer to information on proper techniques to help ensure safe use of the product, and (c) bear a statement limiting the time frame in which the container may be used once it has been entered, provided it is held under the labeled storage conditions.

Primary Engineering Control (PEC): A device or room that provides an ISO Class 5 (see *Table 1*) environment for the exposure of critical sites when compounding CSPs. Such devices include, but may not be limited to, laminar airflow workbenches (LAFWs), biological safety cabinets (BSCs), compounding aseptic isolators (CAIs), and compounding aseptic containment isolators (CACIs).

Preparation: A preparation, or a CSP, that is a sterile drug or nutrient compounded in a licensed pharmacy or other healthcare-related facility pursuant to the order of a licensed prescriber; the article may or may not contain sterile products.

Product: A commercially manufactured sterile drug or nutrient that has been evaluated for safety and efficacy by the FDA. Products are accompanied by full prescribing information, which is commonly known as the FDA-approved manufacturer's labeling or product package insert.

Positive Pressure Room: A room that is at a higher pressure than the adjacent spaces and, therefore, the net airflow is *out of* the room.[12]

Single-Dose Container: (see *General Notices and Requirements* and ⟨659⟩) A single-dose container is a single-unit container for articles (see *General Notices and Requirements*) or preparations intended for parenteral administration only. It is intended for a single use. A single-dose container is labeled as such. Examples of single-dose containers include prefilled syringes, cartridges, fusion-sealed containers, and closure-sealed containers when so labeled.

Segregated Compounding Area: A designated space, either a demarcated area or room, that is restricted to preparing low-risk level CSPs with 12-hour or less BUD. Such area shall contain a device that provides unidirectional airflow of ISO Class 5 (see *Table 1*) air quality for preparation of CSPs and shall be void of activities and materials that are extraneous to sterile compounding.

Sterilizing Grade Membranes: Membranes that are documented to retain 100% of a culture of 10^7 microorganisms of a strain of *Brevundimonas (Pseudomonas) diminuta* per square centimeter of membrane surface under a pressure of not less than 30 psi (2.0 bar). Such filter membranes are nominally at 0.22-µm or 0.2-µm nominal pore size, depending on the manufacturer's practice.

Sterilization by Filtration: Passage of a fluid or solution through a sterilizing grade membrane to produce a sterile effluent.

Terminal Sterilization: The application of a lethal process (e.g., steam under pressure or autoclaving) to sealed containers for the purpose of achieving a predetermined sterility assurance level of usually less than 10^{-6}, or a probability of less than one in one million of a nonsterile unit.[13]

Unidirectional Flow (see footnote 3): An airflow moving in a single direction in a robust and uniform manner and at sufficient speed to reproducibly sweep particles away from the critical processing or testing area.

APPENDICES

Appendix I. Principal Competencies, Conditions, Practices, and Quality Assurances That Are Required († "shall") and Recommended (‡ "should") in USP Chapter ⟨797⟩

NOTE—This tabular appendix selectively abstracts and condenses the full text of ⟨797⟩ for rapid reference only. Compounding personnel are responsible for reading, understanding and complying with the full text and all official USP terminology, content, and conditions therein.

INTRODUCTION

‡ Chapter purpose is to prevent harm and death to patients treated with CSPs.

† Chapter pertains to preparation, storage, and transportation, but not administration, of CSPs.

† Personnel and facilities to which ⟨797⟩ applies; therefore, for whom and which it may be enforced by regulatory and accreditation authorities.

† Types of preparations designated to be CSPs according to their physical forms, and their sites and routes of administration to patients.

† Compounding personnel must be meticulously conscientious to preclude contact contamination of CSPs both within and outside ISO Class 5 areas.

ORGANIZATION

† All compounding personnel shall be responsible for understanding fundamental practices and precautions within USP ⟨797⟩, for developing and implementing appropriate procedures, and for continually evaluating these procedures and the quality of final CSPs to prevent harm.

RESPONSIBILITY OF COMPOUNDING PERSONNEL

† Practices and quality assurances required to prepare, store, and transport CSPs that are sterile, and acceptably accurate, pure, and stable.

APPENDICES

Appendix I. Principal Competencies, Conditions, Practices, and Quality Assurances That Are Required († "shall") and Recommended (‡ "should") in USP Chapter ⟨797⟩ *(Continued)*

CSP MICROBIAL CONTAMINATION RISK LEVELS

† Proper training and evaluation of personnel, proper cleansing and garbing of personnel, proper cleaning and disinfecting of compounding work environments, and proper maintenance and monitoring of controlled environmental locations (all of which are detailed in their respective sections).

Low-Risk Level CSPs

† Aseptic manipulations within an ISO Class 5 environment using three or fewer sterile products and entries into any container.

† In absence of passing sterility test, store not more than 48 hours at controlled room temperature, 14 days at cold temperature, and 45 days in solid frozen state at −25° to −10° or colder.

† Media-fill test at least annually by compounding personnel.

Low-Risk Level CSPs with 12-Hour or Less BUD

† Fully comply with all four specific criteria.

‡ Sinks should not be located adjacent to the ISO Class 5 primary engineering control.

‡ Sinks should be separated from the immediate area of the ISO Class 5 primary engineering control device.

Medium-Risk Level CSPs

† Aseptic manipulations within an ISO Class 5 environment using prolonged and complex mixing and transfer, more than three sterile products and entries into any container, and pooling ingredients from multiple sterile products to prepare multiple CSPs.

† In absence of passing sterility test, store not more than 30 hours at controlled room temperature, 9 days at cold temperature, and 45 days in solid frozen state at −25° to −10° or colder.

†Media-fill test at least annually by compounding personnel.

High-Risk Level CSPs

† Confirmed presence of nonsterile ingredients and devices, or confirmed or suspected exposure of sterile ingredients for more than one hour to air quality inferior to ISO Class 5 before final sterilization.

† Sterilization method verified to achieve sterility for the quantity and type of containers.

† Meet allowable limits for bacterial endotoxins.

† Maintain acceptable strength and purity of ingredients and integrity of containers after sterilization.

† In absence of passing sterility test, store not more than 24 hours at controlled room temperature, 3 days at cold temperature, and 45 days in solid frozen state at −25° to −10° or colder.

† Media-fill test at least semiannually by compounding personnel.

PERSONNEL TRAINING AND EVALUATION IN ASEPTIC MANIPULATIONS SKILLS

† Pass didactic, practical skill assessment and media-fill testing initially, followed by an annual assessment for a low- and medium-risk level compounding and semi-annual assessment for high-risk level compounding.

† Compounding personnel who fail written tests, or whose media-fill test vials result in gross microbial colonization, shall be immediately reinstructed and re-evaluated by expert compounding personnel to ensure correction of all aseptic practice deficiencies.

IMMEDIATE-USE CSPs

† Fully comply with all six specified criteria.

SINGLE-DOSE AND MULTIPLE-DOSE CONTAINERS

† Beyond-use date 28 days, unless specified otherwise by the manufacturer, for closure sealed multiple-dose containers after initial opening or entry.

† Beyond-use time of 6 hours, unless specified otherwise by the manufacturer, for closure sealed single-dose containers in ISO Class 5 or cleaner air after initial opening or entry.

† Beyond-use time of 1 hour for closure sealed single-dose containers after being opened or entered in worse than ISO Class 5 air.

† Storage of opened single-dose ampuls is not permitted.

HAZARDOUS DRUGS AS CSPs

† Appropriate personnel protective equipment.

† Appropriate primary engineering controls (BSCs and CACIs) are used for concurrent personnel protection and exposure of critical sites.

† Hazardous drugs shall be stored separately from other inventory in a manner to prevent contamination and personnel exposure.

† At least 0.01 inch water column negative pressure and 12 air changes per hour in non-cleanrooms in which CACIs are located.

† Hazardous drugs shall be handled with caution at all times using appropriate chemotherapy gloves during receiving, distribution, stocking, inventorying, preparing for administration, and disposal.

† Hazardous drugs shall be prepared in an ISO Class 5 environment with protective engineering controls in place, and following aseptic practices specified for the appropriate contamination risk levels.

† Access to drug preparation areas shall be limited to authorized personnel.

APPENDICES

Appendix I. Principal Competencies, Conditions, Practices, and Quality Assurances That Are Required († "shall") and Recommended (‡ "should") in USP Chapter ⟨797⟩ *(Continued)*

† A pressure indicator shall be installed that can readily monitor room pressurization, which is documented daily.

† Annual documentation of full training of personnel regarding storage, handling, and disposal of hazardous drugs.

† When used, a CSTD shall be used in an ISO Class 5 primary engineering control device.

† At least 0.01 inch water column negative pressure is required for compounding of hazardous drugs.

‡ Negative-pressure buffer area is not required for low-volume compounding operations when CSTD is used in BSC or CACI.

† Compounding personnel of reproductive capability shall confirm in writing that they understand the risks of handling hazardous drugs.

† Disposal of all hazardous drug wastes shall comply with all applicable federal and state regulations.

‡ Total external exhaust of primary engineering controls.

‡ Assay of surface wipe samples every 6 months.

RADIOPHARMACEUTICALS AS CSPs

† Positron Emission Tomography is according to USP chapter ⟨823⟩.

† Appropriate primary engineering controls and radioactivity containment and shielding.

† Radiopharmaceuticals compounded from sterile components, in closed sterile containers, with volume of 100 mL or less for a single-dose injection or not more than 30 mL taken from a multiple-dose container shall be designated as and conform to the standards for low-risk level CSPs.

† Radiopharmaceutical vials, designed for multi-use, compounded with technetium-99m, exposed to ISO Class 5 environment and punctured by needles with no direct contact contamination may be used up to the time indicated by manufacturers' recommendations.

† Location of primary engineering controls permitted in ISO Class 8 controlled environment.

† Technetium-99m/Molybdenum-99 generators used according to manufacturer, state, and federal requirements.

† Radiopharmaceuticals prepared as low-risk level CSPs with 12-hour or less BUD shall be prepared in a segregated compounding area.

† Materials and garb exposed in patient-care and treatment area shall not cross a line of demarcation into the segregated compounding area.

† Technetium-99m/Molybdenum-99 generators must be eluted in ISO Class 8 conditions.

† Segregated compounding area will be designated with a line of demarcation.

‡ Storage and transport of properly shielded vials of radiopharmaceutical CSPs may occur in a limited access ambient environment without a specific ISO class designation.

ALLERGEN EXTRACTS AS CSPs

† Allergen extracts as CSPs are not subject to the personnel, environmental, and storage requirements for all CSP Microbial Contamination Risk Levels when certain criteria are met.

VERIFICATION OF COMPOUNDING ACCURACY AND STERILITY

† Review labels and document correct measurements, aseptic manipulations, and sterilization procedures to confirm correct identity, purity, and strength of ingredients in, and sterility of, CSPs.

‡ Assay finished CSPs to confirm correct identity and, or, strength of ingredients.

‡ Sterility test finished CSPs.

Sterilization Methods

† Verify that methods achieve sterility while maintaining appropriate strength, purity, quality, and packaging integrity.

‡ Prove effectiveness by USP chapter ⟨71⟩, equivalent, or superior sterility testing.

Sterilization of High-Risk Level CSPs by Filtration

† Nominal 0.2-µm pore size sterile membranes that are chemically and physically compatible with the CSP.

† Complete rapidly without filter replacement.

† Subject filter to manufacturer's recommended integrity test (e.g., bubble point test) after filtering CSPs.

Sterilization of High-Risk Level CSPs by Steam

† Test to verify the mass of containers to be sterilized will be sterile after the selected exposure duration in the particular autoclave.

† Ensure live steam contacts all ingredients and surfaces to be sterilized.

† Pass solutions through a 1.2-µm or smaller nominal pore size filter into final containers to remove particulates before sterilization.

† Heated filtered air shall be evenly distributed throughout the chamber by a blower device.

† Dry heat shall only be used for those materials that cannot be sterilized by steam, when the moisture would either damage or be impermeable to the materials.

† Sufficient space shall be left between materials to allow for good circulation of the hot air.

† The description of dry heat sterilization conditions and duration for specific CSPs shall be included in written documentation in the compounding facility. The effectiveness of dry heat sterilization shall be verified using appropriate biological indicators and other confirmation.

‡ The oven should be equipped with a system for controlling temperature and exposure period.

APPENDICES

Appendix I. Principal Competencies, Conditions, Practices, and Quality Assurances That Are Required († "shall") and Recommended (‡ "should") in USP Chapter ⟨797⟩ *(Continued)*

Depyrogenation by Dry Heat

† Dry heat depyrogenation shall be used to render glassware or containers, such as vials free from pyrogens as well as viable microbes.

† The description of the dry heat depyrogenation cycle and duration for specific load items shall be included in written documentation in the compounding facility.

† The effectiveness of the dry heat depyrogenation cycle shall be verified using endotoxin challenge vials (ECVs).

‡ The bacterial endotoxin test should be performed on the ECVs to verify the cycle is capable of achieving a 3 log reduction in endotoxin.

ENVIRONMENTAL QUALITY AND CONTROL

Exposure of Critical Sites

† ISO Class 5 or better air.

† Preclude direct contact (e.g., touch and secretions) contamination.

ISO Class 5 Air Sources, Buffer Areas, and Ante-Areas

† A buffer area is an area that provides at least ISO Class 7 air quality.

† New representations of facility layouts.

† Each compounding facility shall ensure that each source of ISO Class 5 environment for exposure of critical sites and sterilization by filtration is properly located, operated, maintained, monitored, and verified.

† Devices (e.g., computers and printers) and objects (e.g., carts and cabinets) can be placed in buffer areas and shall be verified by testing or monitoring.

Viable and Nonviable Environmental Sampling (ES) Testing

† Environmental sampling shall occur as part a comprehensive quality management program and shall occur minimally when several conditions exist.

‡ The ES program should provide information to staff and leadership to demonstrate that the engineering controls are maintaining an environment within the compounding area that consistently maintains acceptably low viable and nonviable particle levels.

Environmental Nonviable Particle Testing Program

† Certification and testing of primary (LAFWs, BSCs, CAIs and CACIs) and secondary engineering controls (buffer and ante areas) shall be performed by a qualified individual no less than every six months and whenever the device or room is relocated, altered, or major service to the facility is performed. Certification procedures such as those outlined in the CETA Certification Guide for Sterile Compounding Facilities (CAG-003-2006) shall be used.

Total Particle Counts

† Certification that each ISO classified area (e.g., ISO Class 5, 7 and 8) is within established guidelines shall be performed no less than every 6 months and whenever the LAFW, BSC, CAI, or CACI is relocated or the physical structure of the buffer room or ante-area has been altered.

† Testing shall be performed by qualified operators using current, state-of-the-art electronic equipment with results meeting ISO Class 5, 7, or 8 depending on the requirements of the area.

† All certification records shall be maintained and reviewed by supervising personnel or other designated employee to ensure that the controlled environments comply with the proper air cleanliness, room pressures, and air changes per hour.

Pressure Differential Monitoring

† A pressure gauge or velocity meter shall be installed to monitor the pressure differential or airflow between the buffer area and ante-area, and the ante-area and the general environment outside the compounding area.

† The results shall be reviewed and documented on a log at least every work shift (minimum frequency shall be at least daily) or by a continuous recording device.

† The pressure between the ISO Class 7 and general pharmacy area shall not be less than 5 Pa (0.02 inch water column (w.c.)).

† In facilities where low- and medium-risk level CSPs are prepared, differential airflow shall maintain a minimum velocity of 0.2 meter/second (40 fpm) between buffer area and ante-area.

Environmental Viable Airborne Particle Testing Program—Sampling Plan

† An appropriate environmental sampling plan shall be developed for airborne viable particles based on a risk assessment of compounding activities performed.

† Selected sampling sites shall include locations within each ISO Class 5 environment and in the ISO Class 7 and 8 areas, and the segregated compounding areas at greatest risk of contamination (e.g., work areas near the ISO Class 5 environment, counters near doors, pass-through boxes).

† The plan shall include sample location, method of collection, frequency of sampling, volume of air sampled, and time of day as related to activity in the compounding area and action levels.

‡ It is recommended that compounding personnel refer to USP Chapter *Microbiological Control and Monitoring of Aseptic Processing Environments* ⟨1116⟩ and the CDC Guidelines for Environmental Infection Control in Healthcare Facilities-2003 for more information.

Growth Media

† A general microbiological growth medium such as Soybean–Casein Digest Medium (also known as trypticase soy broth (TSB) or agar (TSA)) shall be used to support the growth of bacteria.

† Malt extract agar (MEA) or some other media that supports the growth of fungi shall be used in high-risk level compounding environments.

† Media used for surface sampling shall be supplemented with additives to neutralize the effects of disinfecting agents (e.g., TSA with lecithin and polysorbate 80).

General Chapters

APPENDICES

Appendix I. Principal Competencies, Conditions, Practices, and Quality Assurances That Are Required († "shall") and Recommended (‡ "should") in USP Chapter ⟨797⟩ *(Continued)*

Viable Air Sampling

† Evaluation of airborne microorganisms using volumetric collection methods in the controlled air environments shall be performed by properly trained individuals for all compounding risk levels.

† Impaction shall be the preferred method of volumetric air sampling.

† For low-, medium-, and high-risk level compounding, air sampling shall be performed at locations that are prone to contamination during compounding activities and during other activities like staging, labeling, gowning, and cleaning.

† Locations shall include zones of air backwash turbulence within laminar airflow workbench and other areas where air backwash turbulence may enter the compounding area.

† For low-risk level CSPs with 12-hour or less BUD, air sampling shall be performed at locations inside the ISO Class 5 environment and other areas that are in close proximity to the ISO class 5 environment, during the certification of the primary engineering control.

‡ Consideration should be given to the overall effect the chosen sampling method will have on the unidirectional airflow within a compounding environment.

Air Sampling Devices

† The instructions in the manufacturer's user manual for verification and use of electric air samplers that actively collect volumes of air for evaluation shall be followed.

† A sufficient volume of air (400–1000 liters) shall be tested at each location in order to maximize sensitivity.

‡ It is recommended that compounding personnel also refer to USP Chapter ⟨1116⟩, which can provide more information on the use of volumetric air samplers and volume of air that should be sampled to detect environmental bioburden excursions.

Air Sampling Frequency and Process

† Air sampling shall be performed at least semiannually (i.e. every 6 months), as part of the re-certification of facilities and equipment for area where primary engineering controls are located.

† A sufficient volume of air shall be sampled and the manufacturer's guidelines for use of the electronic air sampling equipment followed.

‡ Any facility construction or equipment servicing may require the need to perform air sampling during these events.

Incubation Period

† The microbial growth media plates used to collect environmental sampling are recovered, covers secured (e.g., taped), inverted, and incubated at a temperature and for a time period conducive to multiplication of microorganisms.

† The number of discrete colonies of microorganisms shall be counted and reported as colony-forming units (cfu) and documented on an environmental monitoring form. Counts from air monitoring need to be transformed into cfu/cubic meter of air and evaluated for adverse trends.

‡ TSA should be incubated at 35° ± 2 ° for 2–3 days.

‡ MEA or other suitable fungal media should be incubated at 28° ± 2 ° for 5–7 days.

Action Levels, Documentation and Data Evaluation

† Sampling data shall be collected and reviewed on a periodic basis as a means of evaluating the overall control of the compounding environment.

† Competent microbiology personnel shall be consulted if an environmental sampling consistently shows elevated levels of microbial growth.

† An investigation into the source of the environmental contamination shall be conducted.

‡ Any cfu count that exceeds its respective action level should prompt a re-evaluation of the adequacy of personnel work practices, cleaning procedures, operational procedures, and air filtration efficiency within the aseptic compounding location.

‡ Table titled, Recommended Action Levels for Microbial Contamination should only be used as a guideline

Facility Design and Environmental Controls

† Compounding facilities are physically designed and environmentally controlled to minimize airborne contamination from contacting critical sites.

† Compounding facilities shall provide a comfortable and well-lighted working environment, which typically includes a temperature of 20° or cooler to maintain comfortable conditions for compounding personnel when attired in the required aseptic compounding garb.

† Primary engineering controls provide unidirectional (i.e., laminar) HEPA air at a velocity sufficient to prevent airborne particles from contacting critical sites.

† In situ air pattern analysis via smoke studies shall be conducted at the critical area to demonstrate unidirectional airflow and sweeping action over and away from the product under dynamic conditions.

† Policies and procedures for maintaining and working within the primary engineering control area shall be written and followed. The policies and procedures will be determined by the scope and risk levels of the aseptic compounding activities used during the preparation of the CSPs.

† The principles of HEPA-filtered unidirectional airflow in the work environment shall be understood and practiced in the compounding process in order to achieve the desired environmental conditions.

† Clean rooms for nonhazardous and nonradioactive CSPs are supplied with HEPA that enters from ceilings with return vents low on walls, and that provides not less than 30 air changes per hour.

† Buffer areas maintain 0.02- to 0.05-inch water column positive pressure, and do not contain sinks or drains.

† Air velocity from buffer rooms or zones to ante-areas is at least 40 feet/minute.

† The primary engineering controls shall be placed within a buffer area in such a manner as to avoid conditions that could adversely affect their operation.

† The primary engineering controls shall be placed out of the traffic flow and in a manner to avoid disruption from the HVAC system and room cross-drafts.

APPENDICES

Appendix I. Principal Competencies, Conditions, Practices, and Quality Assurances That Are Required († "shall") and Recommended (‡ "should") in USP Chapter ⟨797⟩ *(Continued)*

† HEPA-filtered supply air shall be introduced at the ceiling.

† All HEPA filters shall be efficiency tested using the most penetrating particle size and shall be leak tested at the factory and then leak tested again in situ after installation.

† Activities and tasks carried out within the buffer area shall be limited to only those necessary when working within a controlled environment.

† Only the furniture, equipment, supplies, and other material required for the compounding activities to be performed shall be brought into the room.

† Surfaces and essential furniture in buffer rooms or zones and clean rooms shall be nonporous, smooth, nonshedding, impermeable, cleanable, and resistant to disinfectants.

† The surfaces of ceilings, walls, floors, fixtures, shelving, counters, and cabinets in the buffer area shall be smooth, impervious, free from cracks and crevices, and nonshedding, thereby promoting cleanability, and minimizing spaces in which microorganisms and other contaminants may accumulate.

† The surfaces shall be resistant to damage by disinfectant agents.

† Junctures of ceilings to walls shall be coved or caulked to avoid cracks and crevices where dirt can accumulate.

† Ceiling tiles shall be caulked around each perimeter to seal them to the support frame.

† The exterior lens surface of ceiling lighting fixtures shall be smooth, mounted flush, and sealed.

† Any other penetrations through the ceiling or walls shall be sealed.

† The buffer area shall not contain sources of water (sinks) or floor drains. Work surfaces shall be constructed of smooth, impervious materials, such as stainless steel or molded plastic, so that they are easily cleaned and disinfected.

† Carts shall be of stainless steel wire, nonporous plastic, or sheet metal construction with good quality, cleanable casters to promote mobility.

† Storage shelving, counters, and cabinets shall be smooth, impervious, free from cracks and crevices, nonshedding, cleanable, and disinfectable.

† Their number, design, and manner of installation the itmes above shall promote effective cleaning and disinfection.

‡ If ceilings consist of inlaid panels, the panels should be impregnated with a polymer to render them impervious and hydrophobic.

‡ Dust-collecting overhangs, such as ceiling utility pipes, or ledges, such as windowsills, should be avoided.

‡ Air returns should be mounted low on the wall creating a general top-down dilution of room air with HEPA-filtered make-up air.

Placement of Primary Engineering Controls Within ISO Class 7 Buffer Areas

† Primary engineering controls for nonhazardous and nonradioactive CSPs are located in buffer areas, except for CAIs that are proven to maintain ISO Class 5 air when particle counts are sampled 6 to 12 inches upstream of critical site exposure areas during performance of normal inward and outward transfer of materials, and compounding manipulations when such CAIs are located in air quality worse than ISO Class 7.

† Presterilization procedures for high-risk level CSPs, such as weighing and mixing, shall be completed in no worse than an ISO Class 8 environment.

† Primary engineering controls shall be located out of traffic patterns and away from room air currents that could disrupt the intended airflow patterns.

† When isolators are used for sterile compounding, the recovery time to achieve ISO Class 5 air quality shall be documented and internal procedures developed to ensure that adequate recovery time is allowed after material transfer before and during compounding operations.

† When compounding activities require the manipulation of a patient's blood-derived or other biological material (e.g., radiolabeling a patient's or a donor's white blood cells), the manipulations shall be clearly separated from routine material-handling procedures and equipment used in CSP preparation activities, and they shall be controlled by specific standard operating procedures in order to avoid any cross-contamination.

† Food, drinks, and items exposed in patient care areas, and unpacking of bulk supplies and personnel cleansing and garbing are prohibited from buffer areas or rooms.

† Demarcation designation between buffer areas or rooms and ante-areas.

† Antiseptic hand cleansing and sterile gloves in buffer areas or rooms.

‡ Packaged compounding supplies and components, such as needles, syringes, tubing sets, and small- and large-volume parenterals, should be uncartoned and wiped down with a disinfectant that does not leave a residue (e.g., sterile 70% IPA) when possible in an ante-area, of ISO Class 8 air quality, before being passed into the buffer areas.

Cleaning and Disinfecting the Sterile Compounding Areas

† Trained personnel write detailed procedures including cleansers, disinfectants, and non-shedding wipe and mop materials.

† Cleaning and disinfecting surfaces in the LAFWs, BSCs, CAIs, and CACIs shall be cleaned and disinfected frequently, including at the beginning of each work shift, before each batch preparation is started, every 30 minutes during continuous compounding periods of individual CSPs, when there are spills, and when surface contamination is known or suspected from procedural breaches.

† Trained compounding personnel are responsible for developing, implementing, and practicing the procedures for cleaning and disinfecting the DCAs written in the SOPs.

† Cleaning and disinfecting shall occur before compounding is performed. Items shall be removed from all areas to be cleaned, and surfaces shall be cleaned by removing loose material and residue from spills, e.g., water-soluble solid residues are removed with Sterile Water (for Injection or Irrigation) and low-shedding wipes. This shall be followed by wiping with a residue-free disinfecting agent, such as sterile 70% IPA, which is allowed to dry before compounding begins.

† Work surfaces in ISO Class 7 and 8 areas and segregated compounding areas are cleaned at least daily.

† Dust and debris shall be removed when necessary from storage sites for compounding ingredients and supplies, using a method that does not degrade the ISO Class 7 or 8 air quality.

† Floors in ISO Class 7 and 8 areas are cleaned daily when no compounding occurs.

APPENDICES

Appendix I. Principal Competencies, Conditions, Practices, and Quality Assurances That Are Required († "shall") and Recommended (‡ "should") in USP Chapter 〈797〉 *(Continued)*

† IPA (70% isopropyl alcohol) remains on surfaces to be disinfected for at least 30 seconds before such surfaces are used to prepare CSPs.

† Emptied shelving, walls, and ceilings in ante-areas are cleaned and disinfected at least monthly.

† Mopping shall be performed by trained personnel using approved agents and procedures described in the written SOPs.

† Cleaning and disinfecting agents, their schedules of use and methods of application shall be in accordance with written SOPs and followed by custodial and/or compounding personnel.

† All cleaning materials, such as wipers, sponges, and mops, shall be nonshedding, preferably composed of synthetic micro fibers, and dedicated to use in the buffer area, or ante-area, and segregated compounding areas and shall not be removed from these areas except for disposal.

† If cleaning materials are reused (e.g., mops), procedures shall be developed (based on manufacturer recommendations) that ensure that the effectiveness of the cleaning device is maintained and repeated use does not add to the bioburden of the area being cleaned.

† Supplies and equipment removed from shipping cartons shall be wiped with a suitable disinfecting agent (e.g., sterile 70% IPA) delivered from a spray bottle or other suitable delivery method.

† After the disinfectant is sprayed or wiped on a surface to be disinfected, the disinfectant shall be allowed to dry, and during this time the item shall not be used for compounding purposes.

† Sterile 70% IPA wetted gauze pads or other particle-generating material shall not be used to disinfect the sterile entry points of packages and devices.

Personnel Cleansing and Garbing

† Personnel shall also be thoroughly competent and highly motivated to perform flawless aseptic manipulations with ingredients, devices, and components of CSPs.

† Personnel with rashes, sunburn, weeping sores, conjunctivitis, active respiratory infection, and cosmetics are prohibited from preparing CSPs.

† Compounding personnel shall remove personal outer garments; cosmetics; artificial nails; hand, wrist, and body jewelry that can interfere with the fit of gowns and gloves; and visible body piercing above the neck.

† Order of compounding garb and cleansing in ante-area: shoes or shoe covers, head and facial hair covers, face mask, fingernail cleansing, hand and forearm washing and drying; non-shedding gown.

† Order of cleansing and gloving in buffer room or area: hand cleansing with a persistently active alcohol-based product with persistent activity; allow hands to dry; don sterile gloves.

† Routinely disinfect gloves with sterile 70% IPA after contacting nonsterile objects.

† Inspect gloves for holes and replace when breaches are detected.

† Personnel repeat proper procedures after they are exposed to direct contact contamination or worse than ISO Class 8 air.

† These requirements are exempted only for immediate-use CSPs and CAIs for which manufacturers provide written documentation based on validated testing that such personnel practices are not required to maintain sterility in CSPs.

Personnel Training and Competency Evaluation of Garbing, Aseptic Work Practices and Cleaning/Disinfection Procedures

† Personnel who prepare CSPs shall be trained conscientiously and skillfully by expert personnel, multi-media instructional sources, and professional publications in the theoretical principles and practical skills of garbing procedures, aseptic work practices, achieving and maintaining ISO Class 5 environmental conditions, and cleaning and disinfection procedures.

† This training shall be completed and documented before any compounding personnel begin to prepare CSPs.

† Compounding personnel shall complete didactic training, pass written competence assessments, undergo skill assessment using observational audit tools, and media-fill testing.

† Media-fill testing of aseptic work skills shall be performed initially before beginning to prepare CSPs and at least annually thereafter for low- and medium-risk level compounding; and semiannually for high-risk level compounding.

† Compounding personnel who fail written tests, observational audits, or whose media-fill test vials have one or more units showing visible microbial contamination, shall be reinstructed and re-evaluated by expert compounding personnel to ensure correction of all aseptic work practice deficiencies.

† Compounding personnel shall pass all evaluations prior to resuming compounding of sterile preparations.

† Compounding personnel must demonstrate proficiency of proper hand hygiene, garbing, and consistent cleaning procedures in addition to didactic evaluation and aseptic media fill.

† Cleaning and disinfecting procedures performed by other support personnel shall be thoroughly trained in proper hand hygiene, and garbing, cleaning, and disinfection procedures by a qualified aseptic compounding expert.

† Support personnel shall routinely undergo performance evaluation of proper hand hygiene, garbing, and all applicable cleaning and disinfecting procedures conducted by a qualified aseptic compounding expert.

Competency Evaluation of Garbing and Aseptic Work Practices

† Compounding personnel shall be evaluated initially prior to beginning compounding CSPs and whenever an aseptic media fill is performed using a Sample Form for Assessing Hand Hygiene and Garbing Related Practices of Compounding Personnel and the personnel glove fingertip sampling procedures.

Aseptic Work Practice Assessment and Evaluation via Personnel Glove Fingertip Sampling

† Monitoring of compounding personnel glove fingertips shall be performed for all CSP risk level compounding.

† Glove fingertip sampling shall be used to evaluate the competency of personnel in performing hand hygiene and garbing procedures in addition to educating compounding personnel on proper work practices.

† All personnel shall demonstrate competency in proper hand hygiene and garbing procedures in addition to aseptic work practices.

APPENDICES

Appendix I. Principal Competencies, Conditions, Practices, and Quality Assurances That Are Required († "shall") and Recommended (‡ "should") in USP Chapter ⟨797⟩ *(Continued)*

† Sterile contact agar plates shall be used to sample the gloved fingertips of compounding personnel after garbing to assess garbing competency and after completing the media-fill preparation.

† Gloves shall not be disinfected with sterile 70% IPA immediately prior to sampling.

Garbing and Gloving Competency Evaluation

† Compounding personnel shall be visually observed during the process of performing hand hygiene and garbing procedures.

† The visual observation shall be documented on a Sample Form for Assessing Hand Hygiene and Garbing Related Practices of Compounding Personnel and maintained to provide a permanent record of and long-term assessment of personnel competency.

Gloved Fingertip Sampling

† Immediately after the compounder completes the hand hygiene and garbing procedure, the evaluator shall collect a gloved fingertip and thumb sample from both hands of the compounder onto appropriate agar plates by lightly pressing each finger tip into the agar.

† The plates shall be incubated for the appropriate incubation period and at the appropriate temperature.

† All employees shall successfully complete an initial competency evaluation and gloved fingertip/thumb sampling procedure (0 cfu) no less than three times before initially being allowed to compound CSPs for human use.

† After completing the initial gowning and gloving competency evaluation, re-evaluation of all compounding personnel shall occur at least annually for low- and medium-risk level CSPs and semiannually for high-risk level CSPs before being allowed to continue compounding CSPs.

† Gloves shall not be disinfected with sterile 70% IPA prior to testing.

† The sampled gloves shall be immediately discarded and proper hand hygiene performed after sampling. The nutrient agar plates shall be incubated as stated below.

† The cfu action level for gloved hands shall be based on the total number of cfu on both gloves and not per hand.

‡ Results should be reported separately as number of cfu per employee per hand (left hand, right hand).

Incubation Period

† At the end of the designated sampling period, the agar plates are recovered, covers secured, inverted and incubated at a temperature and for a time period conducive to multiplication of microorganisms. Trypticase soy agar (TSA) with lecithin and polysorbate 80 shall be incubated at 35°± 2° for 2–3 days.

Aseptic Manipulation Competency Evaluation

† All compounding personnel shall have their aseptic technique and related practice competency evaluated initially during the media-fill test procedure and subsequent annual or semiannual media-fill test procedures on the Sample Form for Assessing Aseptic Technique and Related Practices of Compounding Personnel.

Media-Fill Test Procedure

† The skill of personnel to aseptically prepare CSPs shall be evaluated using sterile fluid bacterial culture media-fill verification.

† Media-filled vials shall be incubated within a range of 35° ± 2° for 14 days.

Surface Cleaning and Disinfection Sampling and Assessment

† Surface sampling shall be performed in all ISO classified areas on a periodic basis and can be accomplished using contact plates and/or swabs and shall be done at the conclusion of compounding.

† Locations to be sampled shall be defined in a sample plan or on a form.

Cleaning and Disinfecting Competency Evaluation

† Compounding personnel and other personnel responsible for cleaning shall be visually observed during the process of performing cleaning and disinfecting procedures during initial personnel training on cleaning procedures, changes in cleaning staff and at the completion of any Media-Fill Test Procedure.

† Visual observation shall be documented on a Sample Form for Assessing Cleaning and Disinfection Procedures and maintained to provide a permanent record of, and long-term assessment of, personnel competency.

Surface Collection Methods

† Immediately after sampling a surface with the contact plate, the sampled area shall be thoroughly wiped with a non-shedding wipe soaked in sterile 70% IPA.

‡ Results should be reported as cfu per unit of surface area.

Action Levels, Documentation, and Data Evaluation

† Environmental sampling data shall be collected and reviewed on a routine basis as a means of evaluating the overall control of the compounding environment.

† If an activity consistently shows elevated levels of microbial growth, competent microbiology personnel shall be consulted.

† An investigation into the source of the contamination shall be conducted.

† When gloved fingertip sample results exceeds action levels after proper incubation, a review of hand hygiene and garbing procedures as well as glove and surface disinfection procedures and work practices shall be performed and documented.

‡ Any cfu count that exceeds its respective action level should prompt a re-evaluation of the adequacy of personnel work practices, cleaning procedures, operational procedures, and air filtration efficiency within the aseptic compounding location.

SUGGESTED STANDARD OPERATING PROCEDURES

† All facilities are required to have these, and they must include at least the items enumerated in this section.

APPENDICES

Appendix I. Principal Competencies, Conditions, Practices, and Quality Assurances That Are Required († "shall") and Recommended (‡ "should") in USP Chapter ⟨797⟩ *(Continued)*

FINISHED PREPARATION RELEASE CHECKS AND TESTS

Inspection of Solution Dosage Forms and Review of Compounding Procedures

† Review procedures and documents to ensure sterility, purity, correct identities and amounts of ingredients, and stability.

† Visually inspect for abnormal particulate matter and color, and intact containers and seals.

Sterility Testing

† High-risk level CSPs prepared in batches of more than 25 identical containers, or exposed longer than 12 hours at 2° to 8°, and 6 hours at warmer than 8° before being sterilized.

Bacterial Endotoxin (Pyrogen) Testing

† High-risk level CSPs, excluding those for inhalation and ophthalmic administration, prepared in batches of more than 25 identical containers, or exposed longer than 12 hours at 2° to 8°, and 6 hours at warmer than 8°, before being sterilized.

Identity and Strength Verification of Ingredients

† Written procedures to verify correct identity, quality, amounts, and purities of ingredients used in CSPs.

† Written procedures to ensure labels of CSPs contain correct names and amounts or concentrations of ingredients, total volumes, beyond-use dates, storage conditions, and route(s) of administration.

STORAGE AND BEYOND-USE DATING

Determining Beyond-Use Dates

† Use the general criteria in USP ⟨795⟩ in the absence of direct stability-indicating assays or authoritative literature that supports longer durations.

MAINTAINING STERILITY, PURITY, AND STABILITY OF DISPENSED AND DISTRIBUTED CSPs

† Written procedures for proper packaging, storage, and transportation conditions to maintain sterility, quality, purity, and strength of CSPs.

Redispensed CSPs

† When sterility, and acceptable purity, strength, and quality can be ensured.

† Assignment of sterility storage times and stability beyond-use dates that occur later than those of originally dispensed CSPs must be based on results of sterility testing and quantitative assay of ingredients.

Packaging and Transporting CSPs

† Packaging maintains physical integrity, sterility, stability, and purity of CSPs.

† Modes of transport that maintain appropriate temperatures and prevent damage to CSPs.

PATIENT OR CAREGIVER TRAINING

† Multiple component formal training program to ensure patients and caregivers understand the proper storage, handling, use, and disposal of CSPs.

PATIENT MONITORING AND ADVERSE EVENTS REPORTING

† Written standard procedures describe means for patients to ask questions and report concerns and adverse events with CSPs, and for compounding supervisors to correct and prevent future problems.

‡ Adverse events and defects with CSPs reported to FDA's MedWatch and USP's MEDMARX programs.

GLOSSARY

† Twenty-eight terms are defined and integral to complying with USP ⟨797⟩.

Appendix II. Common Disinfectants Used in Health Care for Inanimate Surfaces and Noncritical Devices, and Their Microbial Activity and Properties[1]

		Chemical Category of Disinfectant					
		Isopropyl alcohol	**Accelerated hydrogen peroxide**	**Quaternary Ammonium (e.g., dodecyl dimethyl ammonium chloride)**	**Phenolics**	**Chlorine (e.g., sodium hypochlorite)**	**Iodophors (e.g., povidone-iodine)**
Concentration Used		**60–95%**	**0.5%**[3]	**0.4–1.6% aq**	**0.4–1.6% aq**	**100–5000 ppm**	**30–50 ppm**
Microbial Inactivation[2]	Bacteria	+	+	+	+	+	+
	Lipophilic viruses	+	+	+	+	+	+
	Hydrophilic viruses	±	+	±	±	+	±
	M.tuberculosis	+	+	±	+	+	±
	Mycotic agents (fungi)	+	+	+	+	+	±
	Bacterial Spores	−	−	−	−	+	−
Important Chemical & Physical Properties	Shelf life >1 week	+	+	+	+	+	+
	Corrosive or deleterious effects	±	−	−	−	±	±
	Non-evaporable residue	−	−	+	+	−	+
	Inactivated by organic matter	+	±	+	±	+	+
	Skin irritant	±	−	+	+	+	±
	Eye irritant	+	−	+	+	+	+
	Respiratory irritant	−	−	−	−	+	−
	Systemic toxicity	+	−	+	+	+	+
Key to abbreviation and symbols: aq = diluted with water; ppm = parts per million; + = yes; − = no; ± = variable results.							

[1] Modified from World Health Organization, Laboratory Bio Safety Manual 1983 and Rutala WA, "Antisepsis, disinfection and sterilization in the hospital and related institutions," *Manual of Clinical Microbiology,* American Society for Microbiology, Washington, DC, 1995, pages 227-245.
[2] Inactivation of the most common microorganisms (i.e., bacteria) occurs with a contact time of ≤1 minute; inactivation of spores requires longer contact times (e.g., 5-10 minutes for 5,000 ppm chlorine solution against C. *difficile spores). Reference: Perez J, Springthorpe VS, Sattar SA, "Activity of selected oxidizing microbicides against the spores of Clostridium difficile: Relevance to environmental control," American Journal of Infection Control, August 2005, pages 320-325.*
[3] *Accelerated* hydrogen peroxide is a new generation of hydrogen peroxide-based germicides in which the potency and performance of the active ingredient have been enhanced and accelerated through the use of appropriate acids and detergents.

Appendix III. Sample Form for Assessing Hand Hygiene and Garbing Related Practices of Compounding Personnel

Printed name and position/title of person assessed: ______________________

Name of facility or location: ______________________

Hand Hygiene and Garbing Practices: The qualified evaluator will check each space for which the person being assessed has acceptably completed the described activity, prints N/A if the activity is not applicable to the assessment session or N/O if the activity was not observed.*

__________ Presents in a clean appropriate attire and manner.

__________ Wears no cosmetics or jewelry (watches, rings, earrings, etc. piercing jewelry included) upon entry into ante-areas.

__________ Brings no food or drinks into or stored in the ante-areas or buffer areas.

__________ Is aware of the line of demarcation separating clean and dirty sides and observes required activities.

__________ Dons shoe covers or designated clean-area shoes one at a time, placing the covered or designated shoe on clean side of the line of demarcation, as appropriate.

__________ Dons beard cover if necessary.

__________ Dons head cover assuring that all hair is covered.

__________ Dons face mask to cover bridge of nose down to include chin.

__________ Performs hand hygiene procedure by wetting hands and forearms and washing using soap and warm water for at least 30 seconds.

__________ Dries hands and forearms using lint-free towel or hand dryer.

General Chapters

Appendix III. Sample Form for Assessing Hand Hygiene and Garbing Related Practices of Compounding Personnel *(Continued)*

_____ Selects the appropriate sized gown examining for any holes, tears, or other defects.

_____ Dons gown and ensures full closure.

_____ Disinfects hands again using a waterless alcohol-based surgical hand scrub with persistent activity and allows hands to dry thoroughly before donning sterile gloves.

_____ Dons appropriate sized sterile gloves ensuring that there is a tight fit with no excess glove material at the fingertips.

_____ Examines gloves ensuring that there are no defects, holes, or tears.

_____ While engaging in sterile compounding activities, routinely disinfects gloves with sterile 70% IPA prior to work in the direct compounding area (DCA) and after touching items or surfaces that may contaminate gloves.

_____ Removes PPE on the clean side of the ante-area.

_____ Removes gloves and performs hand hygiene.

_____ Removes gown and discards it, or hangs it on hook if it is to be reused within the same work day.

_____ Removes and discards mask, head cover, and beard cover (if used).

_____ Removes shoe covers or shoes one at a time, ensuring that uncovered foot is placed on the dirty side of the line of demarcation and performs hand hygiene again. (Removes and discards shoe covers every time the compounding area is exited).

***The person assessed is immediately informed of all unacceptable activities (i.e., spaces lacking check marks, N/A, or N/O) and shown and informed of specific corrections.**

Signature of Person Assessed	Printed Name	Date
Signature of Qualified Evaluator	Printed Name	Date

Appendix IV. Sample Form for Assessing Aseptic Technique and Related Practices of Compounding Personnel

Printed name and position/title of person assessed: _____

Name of facility or location: _____

Aseptic Technique, Safety, and Quality Assurance Practices: The qualified evaluator checks each space for which the person being assessed has acceptably completed the described activity, prints N/A if the activity is not applicable to the assessment session or N/O if the activity was not observed.*

_____ Completes the Hand Hygiene and Garbing Competency Assessment Form.

_____ Performs proper hand hygiene, garbing, and gloving procedures according to SOPs.

_____ Disinfects ISO Class 5 device surfaces with an appropriate agent.

_____ Disinfects components/vials with an appropriate agent prior to placing into ISO Class 5 work area.

_____ Introduces only essential materials in a proper arrangement in the ISO Class 5 work area.

_____ Does not interrupt, impede, or divert flow of first-air to critical sites.

_____ Ensures syringes, needles, and tubing remain in their individual packaging and are only opened in ISO Class 5 work area.

_____ Performs manipulations only in the appropriate DCA of the ISO Class 5 device.

_____ Does not expose critical sites to contact contamination or worse than ISO Class 5 air.

_____ Disinfects stoppers, injection ports, and ampul necks by wiping with sterile 70% IPA and allows sufficient time to dry.

_____ Affixes needles to syringes without contact contamination.

_____ Punctures vial stoppers and spikes infusion ports without contact contamination.

_____ Labels preparation(s) correctly.

_____ Disinfects sterile gloves routinely by wiping with sterile 70% IPA during prolonged compounding manipulations.

_____ Cleans, sets up, and calibrates automated compounding device (e.g., "TPN compounder") according to manufacturer's instructions.

_____ Disposes of sharps and waste according to institutional policy or recognized guidelines.

***The person assessed is immediately informed of all unacceptable activities (i.e., spaces lacking check marks, N/A, or N/O) and shown and informed of specific corrections.**

Signature of Person Assessed	Printed Name	Date
Signature of Qualified Evaluator	Printed Name	Date

General Chapters

Appendix V. Sample Form for Assessing Cleaning and Disinfection Procedures

Printed name and position/title of person assessed: ____________________

Name of facility or location: ____________________

Cleaning and Disinfection Practices: The qualified evaluator will check each space for which the person being assessed has acceptably completed the described activity, prints N/A if the activity is not applicable to the assessment session or N/O if the activity was not observed.*

Daily Tasks:

_______ Prepares correct concentration of disinfectant solution according to manufacturer's instructions.

_______ Uses appropriately labeled container for the type of surface to be cleaned (floor, wall, production bins, etc.).

_______ Documents disinfectant solution preparation.

_______ Follows garbing procedures when performing any cleaning activities.

_______ At the beginning of each shift, cleans all ISO Class 5 devices prior to compounding in the following order: walls, IV bar, automated compounders, and work surface.

_______ Uses a lint free wipe soaked with sterile 70% IPA or other approved disinfectant solution and allows to dry completely.

_______ Removes all compounder components and cleans all ISO Class 5 areas as stated above at the end of each shift.

_______ Cleans all counters and easily cleanable work surfaces.

_______ Mops floors, using the mop labeled "floors," starting at the wall opposite the room entry door; mops floor surface in even strokes toward the operator. Moves carts as needed to clean entire floor surface. Use of a microfiber cleaning system is an acceptable alternative to mops.

_______ In the ante-area, cleans sink and all contact surfaces; cleans floor with a disinfectant solution or uses microfiber cleaning system.

Monthly Tasks:

_______ Performs monthly cleaning on a designated day. Prepares a disinfectant solution as stated in daily tasks that is appropriate for the surfaces to be cleaned.

_______ Cleans buffer area and ante-area ceiling, walls, and storage shelving with a disinfectant solution and a mop or uses a microfiber cleaning system.

_______ Once ISO Class 5 area is clean, cleans compounding room ceiling, followed by walls and ending with the floor. Uses appropriate labeled mops or microfiber cleaning system.

_______ Cleans all buffer area totes and storage shelves by removing contents and using a germicidal detergent soaked lint free wipe, cleans the inside surfaces of the tote and then the entire exterior surfaces of the tote. Allows totes to dry. Prior to replacing contents into tote, wipes tote with sterile 70% IPA to remove disinfectant residue. Uses new wipe as needed.

_______ Cleans all buffer area carts by removing contents and using germicidal detergent soaked lint free wipe, cleans all carts starting with the top shelf and top of post, working down to wheels. Cleans the under side of shelves in a similar manner. Uses a new wipe for each cart. Allows to dry. Wipes carts with sterile 70% IPA wetted lint-free wipe to remove any disinfectant residue. Uses new wipe as needed.

_______ Cleans buffer area chairs, the interior and exterior of trash bins, and storage bins using disinfectant solution soaked lint free wipe.

_______ Documents all cleaning activities as to who performed such activities with date and time noted.

***The person assessed is immediately informed of all unacceptable activities (i.e., spaces lacking check marks, N/A, or N/O) and shown and informed of specific corrections.**

Signature of Person Assessed	Printed Name	Date
Signature of Qualified Evaluator	Printed Name	Date

Add the following:

•⟨800⟩ HAZARDOUS DRUGS—HANDLING IN HEALTHCARE SETTINGS

(Chapter to become official July 1, 2018.)

1. INTRODUCTION AND SCOPE

This chapter describes practice and quality standards for handling hazardous drugs (HDs) to promote patient safety, worker safety, and environmental protection. Handling HDs includes, but is not limited to, the receipt, storage, compounding, dispensing, administration, and disposal of sterile and nonsterile products and preparations.

This chapter applies to all healthcare personnel who handle HD preparations and all entities that store, prepare, transport, or administer HDs (e.g., pharmacies, hospitals and other healthcare institutions, patient treatment clinics, physicians' practice facilities, or veterinarians' offices). Personnel who may potentially be exposed to HDs include, but are not limited to: pharmacists, pharmacy technicians, nurses, physicians, physician assistants, home healthcare workers, veterinarians, and veterinary technicians.

Entities that handle HDs must incorporate the standards in this chapter into their occupational safety plan. The entity's health and safety management system must, at a minimum, include:

- A list of HDs
- Facility and engineering controls
- Competent personnel
- Safe work practices
- Proper use of appropriate Personal Protective Equipment (PPE)
- Policies for HD waste segregation and disposal

The chapter is organized into the following main sections:

1. Introduction and Scope
2. List of Hazardous Drugs
3. Types of Exposure
4. Responsibilities of Personnel Handling Hazardous Drugs
5. Facilities and Engineering Controls
6. Environmental Quality and Control
7. Personal Protective Equipment
8. Hazard Communication Program
9. Personnel Training
10. Receiving
11. Labeling, Packaging, Transport, and Disposal
12. Dispensing Final Dosage Forms
13. Compounding
14. Administering
15. Deactivating, Decontaminating, Cleaning, and Disinfecting
16. Spill Control
17. Documentation and Standard Operating Procedures
18. Medical Surveillance

Glossary
Appendices
 Appendix 1: Acronyms
 Appendix 2: Examples of Designs for Hazardous Drug Compounding Areas
 Appendix 3: Types of Biological Safety Cabinets
References

2. LIST OF HAZARDOUS DRUGS

The National Institute for Occupational Safety and Health (NIOSH) maintains a list of antineoplastic and other HDs used in healthcare. An entity must maintain a list of HDs, which must include any items on the current NIOSH list that the entity handles. The entity's list must be reviewed at least every 12 months. Whenever a new agent or dosage form is used, it should be reviewed against the entity's list.

The NIOSH list of antineoplastic and other HDs provides the criteria used to identify HDs. These criteria must be used to identify HDs that enter the market after the most recent version of the NIOSH list, or that the entity handles as an investigational drug. If the information available on a drug is deemed insufficient to make an informed decision, consider the drug hazardous until more information is available.

Box 1: Containment Requirements

- Drugs on the NIOSH list that must follow the requirements in this chapter include:
  - Any HD API
  - Any antineoplastic requiring HD manipulation
- Drugs on the NIOSH list that do not have to follow all the containment requirements of this chapter if an assessment of risk is performed and implemented include:
  - Final dosage forms of compounded HD preparations and conventionally manufactured HD products, including antineoplastic dosage forms that do not require any further manipulation other than counting or repackaging (unless required by the manufacturer)
- For dosage forms of other HDs on the NIOSH list, the entity may perform an assessment of risk to determine alternative containment strategies and/work practices

Some dosage forms of drugs defined as hazardous may not pose a significant risk of direct occupational exposure because of their dosage formulation (e.g., tablets or capsules—solid, intact medications that are administered to patients without modify-

ing the formulation). However, dust from tablets and capsules may present a risk of exposure by skin contact and/or inhalation. An assessment of risk may be performed for these dosage forms to determine alternative containment strategies and/or work practices. If an assessment of risk is not performed, all HDs must be handled with all containment strategies defined in this chapter.

The assessment of risk must, at a minimum, consider the following:

- Type of HD (e.g., antineoplastic, non-antineoplastic, reproductive risk only)
- Dosage form
- Risk of exposure
- Packaging
- Manipulation

If an assessment of risk approach is taken, the entity must document what alternative containment strategies and/or work practices are being employed for specific dosage forms to minimize occupational exposure. If used, the assessment of risk must be reviewed at least every 12 months and the review documented.

3. TYPES OF EXPOSURE

Routes of unintentional entry of HDs into the body include dermal and mucosal absorption, inhalation, injection, and ingestion (e.g., contaminated foodstuffs, spills, or mouth contact with contaminated hands). Containers of HDs have been shown to be contaminated upon receipt. Both clinical and nonclinical personnel may be exposed to HDs when they handle HDs or touch contaminated surfaces. *Table 1* lists examples of potential routes of exposure based on activity.

Table 1. Examples of Potential Opportunities of Exposure Based on Activity

Activity	Potential Opportunity of Exposure
Receipt	• Contacting HD residues present on drug containers, individual dosage units, outer containers, work surfaces, or floors
Dispensing	• Counting or repackaging tablets and capsules
Compounding and other manipulations	• Crushing or splitting tablets or opening capsules • Pouring oral or topical liquids from one container to another • Weighing or mixing components • Constituting or reconstituting powdered or lyophilized HDs • Withdrawing or diluting injectable HDs from parenteral containers • Expelling air or HDs from syringes • Contacting HD residue present on PPE or other garments • Deactivating, decontaminating, cleaning, and disinfecting areas contaminated with or suspected to be contaminated with HDs • Maintenance activities for potentially contaminated equipment and devices
Administration	• Generating aerosols during administration of HDs by various routes (e.g., injection, irrigation, oral, inhalation, or topical application) • Performing certain specialized procedures (e.g., intraoperative intraperitoneal injection or bladder instillation) • Priming an IV administration set
Patient-care activities	• Handling body fluids (e.g., urine, feces, sweat, or vomit) or body-fluid-contaminated clothing, dressings, linens, and other materials
Spills	• Spill generation, management, and disposal
Transport	• Moving HDs within a healthcare setting
Waste	• Collection and disposal of hazardous waste and trace contaminated waste

4. RESPONSIBILITIES OF PERSONNEL HANDLING HAZARDOUS DRUGS

Each entity must have a designated person who is qualified and trained to be responsible for developing and implementing appropriate procedures; overseeing entity compliance with this chapter and other applicable laws, regulations, and standards; ensuring competency of personnel; and ensuring environmental control of the storage and compounding areas. The designated person must thoroughly understand the rationale for risk-prevention policies, risks to themselves and others, risks of noncompliance that may compromise safety, and the responsibility to report potentially hazardous situations to the management team. The designated person must also be responsible for the oversight of monitoring the facility and maintaining reports of testing/sampling performed in facilities, and acting on the results.

All personnel who handle HDs are responsible for understanding the fundamental practices and precautions and for continually evaluating these procedures and the quality of final HDs to prevent harm to patients, minimize exposure to personnel, and minimize contamination of the work and patient-care environment.

Change to read:

5. FACILITIES AND ENGINEERING CONTROLS

HDs must be handled under conditions that promote patient safety, worker safety, and environmental protection. Signs designating the hazard must be prominently displayed before the entrance to the HD handling areas. Access to areas where HDs are handled must be restricted to authorized personnel to protect persons not involved in HD handling. HD handling areas must be located away from breakrooms and refreshment areas for personnel, patients, or visitors to reduce risk of exposure.

Designated areas must be available for:

- Receipt and unpacking
- Storage of HDs
- Nonsterile HD compounding (if performed by the entity)
- Sterile HD compounding (if performed by the entity)

Certain areas are required to have negative pressure from surrounding areas to contain HDs and minimize risk of exposure. Consideration should be given to uninterrupted power sources (UPS) for the ventilation systems to maintain negative pressure in the event of power loss.

5.1 Receipt

Antineoplastic HDs and all HD APIs must be unpacked (i.e., removal from external shipping containers) in an area that is neutral/normal or negative pressure relative to the surrounding areas. HDs must not be unpacked from their external shipping containers in sterile compounding areas or in positive pressure areas.

5.2 Storage

HDs must be stored in a manner that prevents spillage or breakage if the container falls. Do not store HDs on the floor. In areas prone to specific types of natural disasters (e.g., earthquakes) the manner of storage must meet applicable safety precautions, such as secure shelves with raised front lips.

Antineoplastic HDs requiring manipulation other than counting or repackaging of final dosage forms and any HD API must be stored separately from non-HDs in a manner that prevents contamination and personnel exposure. These HDs must be stored in an externally ventilated, negative-pressure room with at least 12 air changes per hour (ACPH). Non-antineoplastic, reproductive risk only, and final dosage forms of antineoplastic HDs may be stored with other inventory if permitted by entity policy.

Sterile and nonsterile HDs may be stored together, but HDs used for nonsterile compounding should not be stored in areas designated for sterile compounding to minimize traffic into the sterile compounding area.

Refrigerated antineoplastic HDs must be stored in a dedicated refrigerator in a negative pressure area with at least 12 ACPH [e.g., storage room, buffer room, or containment segregated compounding area (C-SCA)]. If a refrigerator is placed in a negative pressure buffer room, an exhaust located adjacent to the refrigerator's compressor and behind the refrigerator should be considered.

5.3 Compounding

Engineering controls are required to protect the preparation from cross-contamination and microbial contamination (if preparation is intended to be sterile) during all phases of the compounding process. Engineering controls for containment are divided into three categories representing primary, secondary, and supplementary levels of control. A containment primary engineering control (C-PEC) is a ventilated device designed to minimize worker and environmental HD exposure when directly handling HDs. The containment secondary engineering control (C-SEC) is the room in which the C-PEC is placed. Supplemental engineering controls [e.g., closed-system drug-transfer device (CSTD)] are adjunct controls to offer additional levels of protection. *Appendix 2* provides examples for designs of HD compounding areas.

Sterile and nonsterile HDs must be compounded within a C-PEC located in a C-SEC. The C-SEC used for sterile and nonsterile compounding must:

- Be externally vented ●● (ERR 1-Jun-2016)
- Be physically separated (i.e., a different room from other preparation areas)
- Have an appropriate air exchange (e.g., ACPH)
- Have a negative pressure between 0.01 and 0.03 inches of water column relative to all adjacent areas

The C-PEC must operate continuously if it supplies some or all of the negative pressure in the C-SEC or if it is used for sterile compounding. If there is any loss of power to the C-PEC, or if repair or moving occurs, all activities occurring in the C-PEC must be suspended immediately. If necessary, protect the unit by covering it appropriately per the manufacturer's recommendations. Once the C-PEC can be powered on, decontaminate, clean, and disinfect (if used for sterile compounding) all surfaces and wait the manufacturer-specified recovery time before resuming compounding.

A sink must be available for hand washing. An eyewash station and/or other emergency or safety precautions that meet applicable laws and regulations must be readily available. Care must be taken to locate water sources and drains in areas where their presence will not interfere with required ISO classifications. Water sources and drains must be located at least 1 meter away from the C-PEC.

For entities that compound both nonsterile and sterile HDs, the respective C-PECs must be placed in separate rooms, unless those C-PECs used for nonsterile compounding are sufficiently effective that the room can continuously maintain ISO 7 classification throughout the nonsterile compounding activity. If the C-PECs used for sterile and nonsterile compounding are placed in the same room, they must be placed at least 1 meter apart and particle-generating activity must not be performed when sterile compounding is in process.

5.3.1 NONSTERILE COMPOUNDING

In addition to this chapter, nonsterile compounding must follow standards in *Pharmaceutical Compounding—Nonsterile Preparations* ⟨795⟩. A C-PEC is not required if manipulations are limited to handling of final dosage forms (e.g., counting or repackaging of tablets and capsules) that do not produce particles, aerosols, or gasses.

The C-PECs used for manipulation of nonsterile HDs must be either externally vented (preferred) or have redundant–HEPA filters in series. Nonsterile HD compounding must be performed in a C-PEC that provides personnel and environmental protection, such as a Class I Biological Safety Cabinet (BSC) or Containment Ventilated Enclosure (CVE). A Class II BSC or a compounding aseptic containment isolator (CACI) may also be used. For occasional nonsterile HD compounding, a C-PEC used for sterile compounding (e.g., Class II BSC or CACI) may be used but must be decontaminated, cleaned, and disinfected before resuming sterile compounding in that C-PEC. A C-PEC used only for nonsterile compounding does not require unidirectional airflow because the critical environment does not need to be ISO classified.

The C-PEC must be placed in a C-SEC that has at least 12 ACPH. *Table 2* summarizes the engineering controls required for nonsterile HD compounding.

Due to the difficulty of cleaning HD contamination, surfaces of ceilings, walls, floors, fixtures, shelving, counters, and cabinets in the nonsterile compounding area must be smooth, impervious, free from cracks and crevices, and non-shedding.

Table 2. Engineering Controls for Nonsterile HD Compounding

C-PEC	C-SEC Requirements
• Externally vented (preferred) or redundant–HEPA filtered in series • Examples: CVE, Class I or II BSC, CACI	• Externally vented • 12 ACPH • Negative pressure between 0.01 and 0.03 inches of water column relative to adjacent areas

5.3.2 STERILE COMPOUNDING

In addition to this chapter, sterile compounding must follow standards in ⟨797⟩.

All C-PECs used for manipulation of sterile HDs must be externally vented. Sterile HD compounding must be performed in a C-PEC that provides an ISO Class 5 or better air quality, such as a Class II or III BSC or CACI. Class II BSC types A2, B1, or B2 are acceptable. For most known HDs, type A2 cabinets offer a simple and reliable integration with the ventilation and pressurization requirements of the C-SEC. Class II type B2 BSCs are typically reserved for use with volatile components. *Appendix 3* describes the different types of BSCs.

A laminar airflow workbench (LAFW) or compounding aseptic isolator (CAI) must not be used for the compounding of an antineoplastic HD. A BSC or CACI used for the preparation of HDs must not be used for the preparation of a non-HD unless the non-HD preparation is placed into a protective outer wrapper during removal from the C-PEC and is labeled to require PPE handling precautions.

The C-PEC must be located in a C-SEC, which may either be an ISO Class 7 buffer room with an ISO Class 7 ante-room (preferred) or an unclassified containment segregated compounding area (C-SCA). If the C-PEC is placed in a C-SCA, the beyond-use date (BUD) of all compounded sterile preparations (CSPs) prepared must be limited as described in ⟨797⟩ for CSPs prepared in a segregated compounding area. *Table 3* summarizes the engineering controls required for sterile HD compounding.

Table 3. Engineering Controls for Sterile HD Compounding

Configuration	C-PEC	C-SEC	Maximum BUD
ISO Class 7 buffer room with an ISO Class 7 ante-room	• Externally vented • Examples: Class II BSC or CACI	• Externally vented • 30 ACPH • Negative pressure between 0.01 and 0.03 inches of water column relative to adjacent areas	As described in ⟨797⟩

Table 3. Engineering Controls for Sterile HD Compounding *(Continued)*

Configuration	C-PEC	C-SEC	Maximum BUD
Unclassified C-SCA	• Externally vented • Examples: Class II BSC or CACI	• Externally vented • 12 ACPH • Negative pressure between 0.01 and 0.03 inches of water column relative to adjacent areas	As described in 〈797〉 for CSPs prepared in a segregated compounding area

ISO Class 7 buffer room with an ISO class 7 ante-room: The C-PEC is placed in an ISO Class 7 buffer room that has fixed walls, HEPA-filtered supply air, a negative pressure between 0.01 and 0.03 inches of water column relative to all adjacent areas and a minimum of 30 ACPH.

The buffer room must be externally vented. Because the room through which entry into the HD buffer room (e.g., ante-room or non-HD buffer room) plays an important role in terms of total contamination control, the following is required:

- Minimum of 30 ACPH of HEPA-filtered supply air
- Maintain a positive pressure of at least 0.02 inches of water column relative to all adjacent unclassified areas
- Maintain an air quality of ISO Class 7 or better

An ISO Class 7 ante-room with fixed walls is necessary to provide inward air migration of equal cleanliness classified air into the negative pressure buffer room to contain any airborne HD. A hand-washing sink must be placed in the ante-room at least 1 meter from the entrance to the HD buffer room to avoid contamination migration into the negative pressure HD buffer room.

Although not a recommended facility design, if the negative-pressure HD buffer room is entered though the positive-pressure non-HD buffer room, the following is also required:

- A line of demarcation must be defined within the negative-pressure buffer room for donning and doffing PPE
- A method to transport HDs, HD CSPs, and HD waste into and out of the negative pressure buffer room to minimize the spread of HD contamination. This may be accomplished by use of a pass-through chamber between the negative-pressure buffer area and adjacent space. The pass-through chamber must be included in the facility's certification to ensure that particles are not compromising the air quality of the negative-pressure buffer room. A refrigerator pass-through must not be used. Other methods of containment (such as sealed containers) may be used.

HD CSPs prepared in an ISO Class 7 buffer room with an ISO Class 7 ante-room may use the BUDs described in 〈797〉, based on the categories of CSP, sterility testing, and storage temperature.

Containment segregated compounding area (C-SCA): The C-PEC is placed in an unclassified C-SCA that has fixed walls, a negative pressure between 0.01 and 0.03 inches of water column relative to all adjacent areas, and a minimum of 12 ACPH. The C-SCA must be externally vented. A hand-washing sink must be placed at least 1 meter from C-PEC and may be either inside the C-SCA or directly outside the C-SCA.

Only low- and medium-risk HD CSPs may be prepared in a C-SCA. HD CSPs prepared in the C-SCA must not exceed the BUDs described in 〈797〉 for CSPs prepared in a segregated compounding area.

5.4 Containment Supplemental Engineering Controls

Containment supplemental engineering controls, such as CSTDs, provide adjunct controls to offer an additional level of protection during compounding or administration. Some CSTDs have been shown to limit the potential of generating aerosols during compounding. However, there is no certainty that all CSTDs will perform adequately. Until a published universal performance standard for evaluation of CSTD containment is available, users should carefully evaluate the performance claims associated with available CSTDs based on independent, peer-reviewed studies and demonstrated containment reduction.

A CSTD must not be used as a substitute for a C-PEC when compounding. CSTDs should be used when compounding HDs when the dosage form allows. CSTDs must be used when administering antineoplastic HDs when the dosage form allows. CSTDs known to be physically or chemically incompatible with a specific HD must not be used for that HD.

6. ENVIRONMENTAL QUALITY AND CONTROL

Environmental wipe sampling for HD surface residue should be performed routinely (e.g., initially as a benchmark and at least every 6 months, or more often as needed, to verify containment). Surface wipe sampling should include:

- Interior of the C-PEC and equipment contained in it
- Pass-through chambers
- Surfaces in staging or work areas near the C-PEC
- Areas adjacent to C-PECs (e.g., floors directly under C-PEC, staging, and dispensing area)
- Areas immediately outside the HD buffer room or the C-SCA
- Patient administration areas

There are currently no studies demonstrating the effectiveness of a specific number or size of wipe samples in determining levels of HD contamination. Wipe sampling kits should be verified before use to ensure the method and reagent used have

been tested to recover a specific percentage of known marker drugs from various surface types found in the sampled area. There are currently no certifying agencies for vendors of wipe sample kits.

There is currently no standard for acceptable limits for HD surface contamination. Common marker HDs that can be assayed include cyclophosphamide, ifosfamide, methotrexate, fluorouracil, and platinum-containing drugs. An example of measurable contamination would be cyclophosphamide levels >1.00 ng/cm², which were shown in some studies to result in uptake of the drug in exposed workers. If any measurable contamination is found, the designated person must identify, document, and contain the cause of contamination. Such action may include reevaluating work practices, re-training personnel, performing thorough deactivation, decontamination, cleaning, and improving engineering controls. Repeat the wipe sampling to validate that the deactivation/decontamination and cleaning steps have been effective.

7. PERSONAL PROTECTIVE EQUIPMENT

Personal Protective Equipment (PPE) provides worker protection to reduce exposure to HD aerosols and residues. Additional PPE may be required to handle the HDs outside of a C-PEC, such as treating a patient or cleaning a spill. The NIOSH list of antineoplastic and other HDs provides general guidance on PPE for possible scenarios that may be encountered in healthcare settings. Disposable PPE must not be re-used. Reusable PPE must be decontaminated and cleaned after use.

Gowns, head, hair, shoe covers, and two pairs of chemotherapy gloves are required for compounding sterile and nonsterile HDs. Two pairs of chemotherapy gloves are required for administering antineoplastic HDs. Gowns shown to resist permeability by HDs are required when administering injectable antineoplastic HDs. For all other activities, the entity's SOP must describe the appropriate PPE to be worn based on its occupational safety plan and assessment of risk (if used). The entity must develop SOPs for PPE based on the risk of exposure (see *Types of Exposure*) and activities performed.

Appropriate PPE must be worn when handling HDs including during:

- Receipt
- Storage
- Transport
- Compounding (sterile and nonsterile)
- Administration
- Deactivation/decontamination, cleaning, and disinfecting
- Spill control
- Waste disposal

7.1 Gloves

When chemotherapy gloves are required, they must meet American Society for Testing and Materials (ASTM) standard D6978 (or its successor). Chemotherapy gloves should be worn for handling all HDs including non-antineoplastics and for reproductive risk only HDs. Chemotherapy gloves must be powder-free because powder can contaminate the work area and can adsorb and retain HDs. Gloves must be inspected for physical defects before use. Do not use gloves with pin holes or weak spots.

When used for sterile compounding, the outer chemotherapy gloves must be sterile. Chemotherapy gloves should be changed every 30 minutes unless otherwise recommended by the manufacturer's documentation and must be changed when torn, punctured, or contaminated. Hands must be washed with soap and water after removing gloves.

7.2 Gowns

When gowns are required, they must be disposable and shown to resist permeability by HDs. Gowns must be selected based on the HDs handled. Disposable gowns made of polyethylene-coated polypropylene or other laminate materials offer better protection than those made of uncoated materials. Gowns must close in the back (i.e., no open front), be long sleeved, and have closed cuffs that are elastic or knit. Gowns must not have seams or closures that could allow HDs to pass through.

Cloth laboratory coats, surgical scrubs, isolation gowns, or other absorbent materials are not appropriate protective outerwear when handling HDs because they permit the permeation of HDs and can hold spilled drugs against the skin, thereby increasing exposure. Clothing may also retain HD residue from contact, and may transfer to other healthcare workers or various surfaces. Washing of non-disposable clothing contaminated with HD residue should only be done according to facility policy as drug residue may be transferred to other clothing. Potentially contaminated clothing must not be taken home under any circumstances.

Gowns must be changed per the manufacturer's information for permeation of the gown. If no permeation information is available for the gowns used, change them every 2–3 hours or immediately after a spill or splash. Gowns worn in HD handling areas must not be worn to other areas in order to avoid spreading HD contamination and exposing other healthcare workers.

7.3 Head, Hair, Shoe, and Sleeve Covers

Head and hair covers (including beard and moustache, if applicable), shoe covers, and sleeve covers provide protection from contact with HD residue. When compounding HDs, a second pair of shoe covers must be donned before entering the C-SEC and doffed when exiting the C-SEC. Shoe covers worn in HD handling areas must not be worn to other areas to avoid spreading HD contamination and exposing other healthcare workers.

Disposable sleeve covers may be used to protect areas of the arm that may come in contact with HDs. Disposable sleeve covers made of polyethylene-coated polypropylene or other laminate materials offer better protection than those made of uncoated materials.

7.4 Eye and Face Protection

Many HDs are irritating to the eyes and mucous membranes. Appropriate eye and face protection must be worn when there is a risk for spills or splashes of HDs or HD waste materials when working outside of a C-PEC (e.g., administration in the surgical suite, working at or above eye level, or cleaning a spill). A full-facepiece respirator provides eye and face protection. Goggles must be used when eye protection is needed. Eye glasses alone or safety glasses with side shields do not protect the eyes adequately from splashes. Face shields in combination with goggles provide a full range of protection against splashes to the face and eyes. Face shields alone do not provide full eye and face protection.

7.5 Respiratory Protection

Personnel who are unpacking HDs that are not contained in plastic should wear an elastomeric half-mask with a multi-gas cartridge and P100-filter until assessment of the packaging integrity can be made to ensure no breakage or spillage occurred during transport. If the type of drug can be better defined, a more targeted cartridge can be used.

Surgical masks do not provide respiratory protection from drug exposure and must not be used when respiratory protection from HD exposure is required. A surgical N95 respirator provides the respiratory protection of an N95 respirator, and like a surgical mask, provides a barrier to splashes, droplets, and sprays around the nose and mouth.

For most activities requiring respiratory protection, a fit-tested NIOSH-certified N95 or more protective respirator is sufficient to protect against airborne particles. However, N95 respirators offer no protection against gases and vapors and little protection against direct liquid splashes (see the Centers for Disease Control and Prevention's (CDC's) Respirator Trusted-Source Information).

Fit test the respirator and train workers to use respiratory protection. Follow all requirements in the Occupational Safety and Health Administration (OSHA) respiratory protection standard (29 CFR 1910.134). An appropriate full-facepiece, chemical cartridge-type respirator or powered air-purifying respirator (PAPR) should be worn when there is a risk of respiratory exposure to HDs, including when:

- Attending to HD spills larger than what can be contained with a spill kit
- Deactivating, decontaminating, and cleaning underneath the work surface of a C-PEC
- There is a known or suspected airborne exposure to powders or vapors

7.6 Disposal of Used Personal Protective Equipment

Consider all PPE worn when handling HDs to be contaminated with, at minimum, trace quantities of HDs. PPE must be placed in an appropriate waste container and further disposed of per local, state, and federal regulations. PPE worn during compounding should be disposed of in the proper waste container before leaving the C-SEC. Chemotherapy gloves and sleeve covers (if used) worn during compounding must be carefully removed and discarded immediately into a waste container approved for trace contaminated waste inside the C-PEC or contained in a sealable bag for discarding outside the C-PEC.

8. HAZARD COMMUNICATION PROGRAM

Entities are required to establish policies and procedures that ensure worker safety during all aspects of HD handling. The entity must develop SOPs to ensure effective training regarding proper labeling, transport, storage, and disposal of the HDs and use of Safety Data Sheets (SDS), based on the Globally Harmonized System of Classification and Labeling of Chemicals (GHS).

Elements of the hazard communication program plan must include:

- A written plan that describes how the standard will be implemented
- All containers of hazardous chemicals must be labeled, tagged, or marked with the identity of the material and appropriate hazard warnings
- Entities must have an SDS for each hazardous chemical they use (29 CFR 1910.1200)
- Entities must ensure that the SDSs for each hazardous chemical used are readily accessible to personnel during each work shift and when they are in their work areas

- Personnel who may be exposed to hazardous chemicals when working must be provided information and training before the initial assignment to work with a hazardous chemical, and also whenever the hazard changes
- Personnel of reproductive capability must confirm in writing that they understand the risks of handling HDs

9. PERSONNEL TRAINING

All personnel who handle HDs must be trained based on their job functions (e.g., in the receipt, storage, compounding, repackaging, dispensing, administrating, and disposing of HDs). Training must occur before the employee independently handles HDs. The effectiveness of training for HD handling competencies must be demonstrated by each employee. Personnel competency must be reassessed at least every 12 months. Personnel must be trained prior to the introduction of a new HD or new equipment and prior to a new or significant change in process or SOP. All training and competency assessment must be documented.

The training must include at least the following:

- Overview of entity's list of HDs and their risks
- Review of the entity's SOPs related to handling of HDs
- Proper use of PPE
- Proper use of equipment and devices (e.g., engineering controls)
- Response to known or suspected HD exposure
- Spill management
- Proper disposal of HDs and trace-contaminated materials

10. RECEIVING

The entity must establish SOPs for receiving HDs. HDs should be received from the supplier in impervious plastic to segregate them from other drugs and to allow for safety in the receiving and internal transfer process. HDs must be delivered to the HD storage area immediately after unpacking.

PPE, including chemotherapy gloves, must be worn when unpacking HDs (see *Personal Protective Equipment*). A spill kit must be accessible in the receiving area.

The entity must enforce policies that include a tiered approach, starting with visual examination of the shipping container for signs of damage or breakage (e.g., visible stains from leakage, sounds of broken glass). *Table 4* summarizes the steps for receiving and handling of damaged shipping containers.

Table 4. Summary of Requirements for Receiving and Handling Damaged HD Shipping Containers

If the shipping container appears damaged	• Seal container without opening and contact the supplier • If the unopened package is to be returned to the supplier, enclose the package in an impervious container and label the outer container "Hazardous" • If the supplier declines return, dispose of as hazardous waste
If a damaged shipping container must be opened	• Seal the container in plastic or an impervious container • Transport it to a C-PEC and place on a plastic-backed preparation mat • Open the package and remove undamaged items • Wipe the outside of the undamaged items with a disposable wipe • Enclose the damaged item(s) in an impervious container and label the outer container "Hazardous" • If the supplier declines return, dispose of as hazardous waste • Deactivate, decontaminate, and clean the C-PEC (see *Deactivating, Decontaminating, Cleaning, and Disinfecting*) and discard the mat and cleaning disposables as hazardous waste

When opening damaged shipping containers, they should preferably be transported to a C-PEC designated for nonsterile compounding. If a C-PEC designated for sterile compounding is the only one available, it must be disinfected after the decontamination, deactivation, and cleaning step before returning to any sterile compounding activity.

Damaged packages or shipping cartons must be considered spills that must be reported to the designated person and managed according to the entity's SOPs. Segregate HDs waiting to be returned to the supplier in a designated negative pressure area. Clean-up must comply with established SOPs.

11. LABELING, PACKAGING, TRANSPORT AND DISPOSAL

The entity must establish SOPs for the labeling, packaging, transport, and disposal of HDs. The SOPs must address prevention of accidental exposures or spills, personnel training on response to exposure, and use of a spill kit. Examples of special exposure-reducing strategies include small-bore connectors (such as Luer Lock) and syringes, syringe caps, CSTDs, the capping of container ports, sealed impervious plastic bags, impact-resistant and/or water-tight containers, and cautionary labeling.

11.1 Labeling

HDs identified by the entity as requiring special HD handling precautions must be clearly labeled at all times during their transport. Personnel must ensure that the labeling processes for compounded preparations do not introduce contamination into the non-HD handling areas.

11.2 Packaging

Personnel must select and use packaging containers and materials that will maintain physical integrity, stability, and sterility (if needed) of the HDs during transport. Packaging materials must protect the HD from damage, leakage, contamination, and degradation, while protecting healthcare workers who transport HDs. The entity must have written SOPs to describe appropriate shipping containers and insulating materials, based on information from product specifications, vendors, and mode of transport.

11.3 Transport

HDs that need to be transported must be labeled, stored, and handled in accordance with applicable federal, state, and local regulations. HDs must be transported in containers that minimize the risk of breakage or leakage. Pneumatic tubes must not be used to transport any liquid HDs or any antineoplastic HDs because of the potential for breakage and contamination.

When shipping HDs to locations outside the entity, the entity must consult the Transport Information on the SDS. The entity must ensure that labels and accessory labeling for the HDs include storage instructions, disposal instructions, and HD category information in a format that is consistent with the carrier's policies.

11.4 Disposal

All personnel who perform routine custodial waste removal and cleaning activities in HD handling areas must be trained in appropriate procedures to protect themselves and the environment to prevent HD contamination. Disposal of all HD waste, including, but not limited to, unused HDs and trace-contaminated PPE and other materials, must comply with all applicable federal, state, and local regulations.

12. DISPENSING FINAL DOSAGE FORMS

HDs that do not require any further manipulation, other than counting or repackaging of final dosage forms, may be prepared for dispensing without any further requirements for containment unless required by the manufacturer or if visual indicators of HD exposure hazards are present (e.g., HD dust or leakage).

Counting or repackaging of HDs must be done carefully. Clean equipment should be dedicated for use with HDs and should be decontaminated after every use. Tablet and capsule forms of antineoplastic HDs must not be placed in automated counting or packaging machines, which subject them to stress and may create powdered contaminants.

13. COMPOUNDING

Entities and personnel involved in compounding HDs must be compliant with the appropriate USP standards for compounding including ⟨795⟩ and ⟨797⟩. Compounding must be done in proper engineering controls as described in *Compounding.* When compounding HD preparations in a C-PEC, a plastic-backed preparation mat should be placed on the work surface of the C-PEC. The mat should be changed immediately if a spill occurs and regularly during use, and should be discarded at the end of the daily compounding activity. Disposable or clean equipment for compounding (such as mortars and pestles, and spatulas) must be dedicated for use with HDs.

Bulk containers of liquid and API HD must be handled carefully to avoid spills. If used, APIs or other powdered HDs must be handled in a C-PEC to protect against occupational exposure, especially during particle-generating activities (such as crushing tablets, opening capsules, and weighing powder).

14. ADMINISTERING

HDs must be administered safely using protective medical devices and techniques. Examples of protective medical devices include needleless and closed systems. Examples of protective techniques include spiking or priming of IV tubing with a non-HD solution in a C-PEC and crushing tablets in a plastic pouch.

Appropriate PPE must be worn when administering HDs. After use, PPE must be removed and disposed of in a waste container approved for trace-contaminated HD waste at the site of drug administration. Equipment (such as tubing and needles) and packaging materials must be disposed of properly, such as in HD waste containers, after administration.

CSTDs must be used for administration of antineoplastic HDs when the dosage form allows. Techniques and ancillary devices that minimize the risk posed by open systems must be used when administering HDs through certain routes. Administration into certain organs or body cavities (e.g., the bladder, eye, peritoneal cavity, or chest cavity) often requires equipment for which locking connections may not be readily available or possible.

Healthcare personnel should avoid manipulating HDs such as crushing tablets or opening capsules if possible. Liquid formulations are preferred if solid oral dosage forms are not appropriate for the patient. If HD dosage forms do require manipulation such as crushing tablet(s) or opening capsule(s) for a single dose, personnel must don appropriate PPE and use a plastic pouch to contain any dust or particles generated.

15. DEACTIVATING, DECONTAMINATING, CLEANING, AND DISINFECTING

All areas where HDs are handled and all reusable equipment and devices must be deactivated, decontaminated, and cleaned. Additionally, sterile compounding areas and devices must be subsequently disinfected.

The entity must establish written procedures for decontamination, deactivation, and cleaning, and for sterile compounding areas disinfection. Additionally, cleaning of nonsterile compounding areas must comply with ⟨795⟩ and cleaning of sterile compounding areas must comply with ⟨797⟩. Written procedures for cleaning must include procedures, agents used, dilutions (if used), frequency, and documentation requirements.

All personnel who perform deactivation, decontamination, cleaning, and disinfection activities in HD handling areas must be trained in appropriate procedures to protect themselves and the environment from contamination. All personnel performing these activities must wear appropriate PPE resistant to the cleaning agents used, including two pairs of chemotherapy gloves and impermeable disposable gowns (see *Personal Protective Equipment*). Additionally, eye protection and face shields must be used if splashing is likely. If warranted by the activity, respiratory protection must be used.

The deactivating, decontaminating, cleaning, and disinfecting agents selected must be appropriate for the type of HD contaminant(s), location, and surface materials. The products used must be compatible with the surface material. Consult manufacturer or supplier information for compatibility with cleaning agents used. Agents used for deactivation, decontamination, and cleaning should be applied through the use of wipes wetted with appropriate solution and not delivered by a spray bottle to avoid spreading HD residue. All disposable materials must be discarded to meet EPA regulations and the entity's policies. Perform cleaning in areas that are sufficiently ventilated. *Table 5* summarizes the purpose and example agents for each step.

Table 5. Cleaning Steps

Cleaning Step	Purpose	Example Agents
Deactivation	Render compound inert or inactive	As listed in the HD labeling or other agents which may incorporate Environmental Protection Agency (EPA)-registered oxidizers (e.g., peroxide formulations, sodium hypochlorite, etc.)
Decontamination	Remove HD residue	Materials that have been validated to be effective for HD decontamination, or through other materials proven to be effective through testing, which may include alcohol, water, peroxide, or sodium hypochlorite
Cleaning	Remove organic and inorganic material	Germicidal detergent
Disinfection (for sterile manipulations)	Destroy microorganisms	EPA-registered disinfectant and/or sterile alcohol as appropriate for use

15.1 Deactivation

Deactivation renders a compound inert or inactive. Residue from deactivation must be removed by decontaminating the surface.

There is no one proven method for deactivating all compounds. The ultimate goal should be complete surface decontamination. Products that have known deactivation properties (EPA-registered oxidizing agents that are appropriate for the intended use) should be used when possible. Care should be taken when selecting materials for deactivation due to potential adverse effects (hazardous byproducts, respiratory effects, and caustic damage to surfaces). Damage to surfaces is exhibited by corrosion to stainless steel surfaces caused by sodium hypochlorite if left untreated. To prevent corrosion, sodium hypochlorite must be neutralized with sodium thiosulfate or by following with an agent to remove the sodium hypochlorite (e.g., sterile alcohol, sterile water, germicidal detergent, or sporicidal agent).

15.2 Decontamination

Decontamination occurs by inactivating, neutralizing, or physically removing HD residue from non-disposable surfaces and transferring it to absorbent, disposable materials (e.g., wipes, pads, or towels) appropriate to the area being cleaned. When choosing among various products available for decontaminating HDs, consideration should be given to surface compatibility

and facility requirements. It is imperative to adhere to manufacturer's use instructions. Because of the growing number of assays available for HDs, additional surface wipe sampling is now possible and should be done to document the effectiveness of any agent used for decontamination of HD residue from work surfaces (see *Environmental Quality and Control*).

The amount of HD contamination introduced into the C-PEC may be reduced by wiping down HD containers. The solution used for wiping HD packaging must not alter the product label. The work surface of the C-PEC must be decontaminated between compounding of different HDs. The C-PEC must be decontaminated at least daily (when used), any time a spill occurs, before and after certification, any time voluntary interruption occurs, and if the ventilation tool is moved.

C-PECs may have areas under the work tray where contamination can build up. These areas must be deactivated, decontaminated, and cleaned at least monthly to reduce the contamination level in the C-PEC. Accessing this area may be difficult. Deactivate, decontaminate, and clean as much as possible of the C-PEC surfaces before accessing the area under the work tray. When deactivating, decontaminating, and cleaning the area under the work tray of a C-PEC, the containment airflows are compromised by opening the cabinets. To provide protection to the worker performing this task, respiratory protection may be required.

15.3 Cleaning

Cleaning is a process that results in the removal of contaminants (e.g., soil, microbial contamination, HD residue) from objects and surfaces using water, detergents, surfactants, solvents, and/or other chemicals. Cleaning agents used on compounding equipment should not introduce microbial contamination. No cleaning step may be performed when compounding activities are occurring.

15.4 Disinfection

Disinfection is a process of inhibiting or destroying microorganisms. Before disinfection can be adequately performed, surfaces must be cleaned. Disinfection must be done for areas intended to be sterile, including the sterile compounding areas.

16. SPILL CONTROL

All personnel who may be required to clean up a spill of HDs must receive proper training in spill management and the use of PPE and NIOSH-certified respirators (see *Personal Protective Equipment*). Spills must be contained and cleaned immediately only by qualified personnel with appropriate PPE. Qualified personnel must be available at all times while HDs are being handled. Signs must be available for restricting access to the spill area. Spill kits containing all of the materials needed to clean HD spills must be readily available in all areas where HDs are routinely handled. If HDs are being prepared or administered in a non-routine healthcare area, a spill kit and respirator must be available. All spill materials must be disposed of as hazardous waste.

The circumstances and management of spills must be documented. Personnel who are potentially exposed during the spill or spill clean up or who have direct skin or eye contact with HDs require immediate evaluation. Non-employees exposed to an HD spill should follow entity policy, which may include reporting to the designated emergency service for initial evaluation and completion of an incident report or exposure form.

SOPs must be developed to prevent spills and to direct the clean up of HD spills. SOPs must address the size and scope of the spill and specify who is responsible for spill management and the type of PPE required. The management of the spill (e.g., decontamination, deactivation, and cleaning) may be dependent on the size and type of spill. The SOP must address the location of spill kits and clean-up materials as well as the capacity of the spill kit. Written procedures should address use of appropriate full-facepiece, chemical cartridge-type respirators if the capacity of the spill kit is exceeded or if there is known or suspected airborne exposure to vapors or gases.

17. DOCUMENTATION AND STANDARD OPERATING PROCEDURES

The entity must maintain SOPs for the safe handling of HDs for all situations in which these HDs are used throughout a facility. The SOPs must be reviewed at least every 12 months by the designated person, and the review must be documented. Revisions in forms or records must be made as needed and communicated to all personnel handling HDs.

The SOPs for handling of HDs should include:

- Hazard communication program
- Occupational safety program
- Designation of HD areas
- Receipt
- Storage
- Compounding
- Use and maintenance of proper engineering controls (e.g., C-PECs, C-SECs, and CSTDs)
- Hand hygiene and use of PPE based on activity (e.g., receipt, transport, compounding, administration, spill, and disposal)

- Deactivation, decontamination, cleaning, and disinfection
- Dispensing
- Transport
- Administering
- Environmental monitoring (e.g., wipe sampling)
- Disposal
- Spill control
- Medical surveillance

Personnel who transport, compound, or administer HDs must document their training according to OSHA standards (see OSHA Standard 1910.120 Hazardous Waste Operations and Emergency Response) and other applicable laws and regulations.

18. MEDICAL SURVEILLANCE

Medical surveillance is part of a comprehensive exposure control program complementing engineering controls, safe work processes, and use of PPE. Healthcare workers who handle HDs as a regular part of their job assignment should be enrolled in a medical surveillance program. The general purpose of surveillance is to minimize adverse health effects in personnel potentially exposed to HDs. Medical surveillance programs involve assessment and documentation of symptom complaints, physical findings, and laboratory values (such as a blood count) to determine whether there is a deviation from the expected norms.

Medical surveillance can also be viewed as a secondary prevention tool that may provide a means of early detection if a health problem develops. Tracking personnel through medical surveillance allows the comparison of health variables over time in individual workers, which may facilitate early detection of a change in a laboratory value or health condition. Medical surveillance programs also look for trends in populations of workers. Examining grouped data compared with data from unexposed workers may reveal a small alteration or increase in the frequency of a health effect that would be obscured if individual workers' results alone were considered.

Medical surveillance evaluates the protection afforded by engineering controls, other administrative controls, safe work processes, PPE, and worker education about the hazards of the materials they work with in the course of their duties. The data-gathering elements of a medical surveillance program are used to establish a baseline of workers' health and then to monitor their future health for any changes that may result from exposure to HDs.

Elements of a medical surveillance program should be consistent with the entity's Human Resource policies and should include:

- Development of an organized approach to identify workers who are potentially exposed to HDs on the basis of their job duties
- Use of an entity-based or contracted employee health service to perform the medical surveillance while protecting the confidentiality of the employees' personal medical information
- Initial baseline assessment (pre-placement) of a worker's health status and medical history. Data elements collected include a medical (including reproductive) history and work history to assess exposure to HDs, physical examination, and laboratory testing. Methods used to assess exposure history include a review of:
    - — Records of HDs handled, with quantities and dosage forms
    - — Estimated number of HDs handled per week
    - — Estimates of hours spent handling HDs per week and/or per month
    - — Performance of a physical assessment and laboratory studies linked to target organs of commonly used HDs, such as a baseline complete blood count. Biological monitoring to determine blood or urine levels of specific HDs is not currently recommended in surveillance protocols, but may have a role in the follow-up of acute spills with a specific agent.
- Medical records of surveillance should be maintained according to OSHA regulation concerning access to employee exposure and medical records
- Monitoring workers' health prospectively through periodic surveillance using the elements of data gathering described above (updated health and exposure history, physical assessment, and laboratory measures, if appropriate)
- Monitoring of the data to identify prevention failure leading to health effects; this monitoring may occur in collaboration with the employee health service
- Development of a follow-up plan for workers who have shown health changes suggesting toxicity or who have experienced an acute exposure. This follow-up should include evaluation of current engineering and administrative controls and equipment to ensure that all systems are appropriately and accurately implemented (see *Follow-Up Plan*)
- Completion of an exit examination when a worker's employment at the entity ends, to document the information on the employee's medical, reproductive, and exposure histories. Examination and laboratory evaluation should be guided by the individual's history of exposures and follow the outline of the periodic evaluation

18.1 Follow-Up Plan

The occurrence of exposure-related health changes should prompt immediate re-evaluation of primary preventive measures (e.g., administrative and engineering controls, PPE, and others). In this manner, medical surveillance acts as a check on the effectiveness of controls already in use.

The entity should take the following actions:

- Perform a post-exposure examination tailored to the type of exposure (e.g., spills or needle sticks from syringes containing HDs). An assessment of the extent of exposure should be conducted and included in a confidential database and in an incident report. The physical examination should focus on the involved area as well as other organ systems commonly affected (i.e., the skin and mucous membranes for direct contact or inhalation; the pulmonary system for aerosolized HDs). Treatment and laboratory studies will follow as indicated and be guided by emergency protocols
- Compare performance of controls with recommended standards; conduct environmental sampling when analytical methods are available
- Verify and document that all engineering controls are in proper operating condition
- Verify and document that the worker complied with existing policies. Review policies for the use of PPE and employee compliance with PPE use and policies. Review availability of appropriate PPE (see *Personal Protective Equipment*)
- Develop and document a plan of action that will prevent additional exposure of workers
- Ensure confidential, two-way communication between the worker and the employee health unit(s) regarding notification, discussions about a change in health condition, or detection of an adverse health effect
- Provide and document a follow-up medical survey to demonstrate that the plan implemented is effective
- Ensure that any exposed worker receives confidential notification of any adverse health effect. Offer alternative duty or temporary reassignment
- Provide ongoing medical surveillance of all workers at risk for exposure to HDs to determine whether the plan implemented is effective

GLOSSARY

Active pharmaceutical ingredient (API): Any substance or mixture of substances intended to be used in the compounding of a drug preparation, thereby becoming the active ingredient in that preparation and furnishing pharmacological activity or other direct effect in the diagnosis, cure, mitigation, treatment, or prevention of disease in humans and animals or affecting the structure and function of the body.

Alternative duty: Performance of other tasks that do not include the direct handling of HDs.

Ante-room: An ISO Class 7 or cleaner room where personnel hand hygiene, garbing procedures, and other activities that generate high particulate levels are performed. The ante-room is the transition room between the unclassified area of the facility and the buffer room.

Assessment of risk: Evaluation of risk to determine alternative containment strategies and/or work practices.

Beyond-use date (BUD): The date or time beyond which a compounded preparation cannot not be used and must be discarded (see ⟨795⟩ and ⟨797⟩). The date or time is determined from the date or time when the preparation was compounded.

Biological safety cabinet (BSC): A ventilated cabinet often used for preparation of hazardous drugs. These cabinets are divided into three general classes (Class I, Class II, and Class III). Class II BSCs are further divided into types (Type A1, Type A2, Type B1, and Type B2). See *Appendix 3* for details.

Buffer room: A type of C-SEC under negative pressure that meets ISO Class 7 or better air quality where the C-PEC that generates and maintains an ISO Class 5 environment is physically located. Activities that occur in this area are limited to the preparation and staging of components and supplies used when compounding HDs.

Chemotherapy glove: A medical glove that meets the ASTM Standard Practice for Assessment of Resistance of Medical Gloves to Permeation by Chemotherapy Drugs (D6978) or its successor.

Classified space: An area that maintains an air cleanliness classification based on the International Organization for Standardization (ISO).

Cleaning: The process of removing soil (e.g., organic and inorganic material) from objects and surfaces, normally accomplished by manually or mechanically using water with detergents or enzymatic products.

Closed-system drug-transfer device (CSTD): A drug-transfer device that mechanically prohibits the transfer of environmental contaminants into the system and the escape of HD or vapor concentrations outside the system.

Compounded preparation: A nonsterile or sterile drug or nutrient preparation that is compounded in a licensed pharmacy or other healthcare-related facility in response to or anticipation of a prescription or a medication order from a licensed prescriber.

Compounding aseptic containment isolator (CACI): A specific type of CAI that is designed for the compounding of sterile HDs. The CACI is designed to provide worker protection from exposure to undesirable levels of airborne drugs throughout the compounding and material transfer processes and to provide an aseptic environment with unidirectional airflow for compounding sterile preparations.

Compounding aseptic isolator (CAI): An isolator specifically designed for compounding sterile, non-hazardous pharmaceutical ingredients or preparations. The CAI is designed to maintain an aseptic compounding environment throughout the compounding and material transfer processes.
Compounding personnel: Individuals who participate in the compounding process.
Containment primary engineering control (C-PEC): A ventilated device designed and operated to minimize worker and environmental exposures to HDs by controlling emissions of airborne contaminants through the following:

- The full or partial enclosure of a potential contaminant source
- The use of airflow capture velocities to trap and remove airborne contaminants near their point of generation
- The use of air pressure relationships that define the direction of airflow into the cabinet
- The use of HEPA filtration on all potentially contaminated exhaust streams

Containment secondary engineering control (C-SEC): The room with fixed walls in which the C-PEC is placed. It incorporates specific design and operational parameters required to contain the potential hazard within the compounding room.
Containment segregated compounding area (C-SCA): A type of C-SEC with nominal requirements for airflow and room pressurization as they pertain to HD compounding.
Containment ventilated enclosure (CVE): A full or partial enclosure that uses ventilation principles to capture, contain, and remove airborne contaminants through HEPA filtration and prevent their release into the work environment.
Deactivation: Treatment of an HD contaminant on surfaces with a chemical, heat, ultraviolet light, or another agent to transform the HD into a less hazardous agent.
Decontamination: Inactivation, neutralization, or removal of HD contaminants on surfaces, usually by chemical means.
Doff: To remove PPE.
Don: To put on PPE.
Disinfection: The process of inhibiting or destroying microorganisms.
Engineering control: Primary, secondary, and supplemental devices designed to eliminate or reduce worker exposure to HDs.
EPA-registered disinfectant: Antimicrobial products registered with the Environmental Protection Agency (EPA) for healthcare use against pathogens specified in the product labeling.
Externally vented: Exhausted to the outside
Final dosage form: Any form of a medication that requires no further manipulation before administration.
Globally Harmonized System of Classification and Labeling of Chemicals (GHS): A system for standardizing and harmonizing the classification and labeling of chemicals.
Goggles: Tight-fitting eye protection that completely covers the eyes, eye sockets, and facial area that immediately surrounds the eyes. Goggles provide protection from impact, dust, and splashes. Some goggles fit over corrective lenses.
Hazardous drug (HD): Any drug identified by at least one of the following criteria:

- Carcinogenicity, teratogenicity, or developmental toxicity
- Reproductive toxicity in humans
- Organ toxicity at low dose in humans or animals
- Genotoxicity or new drugs that mimic existing HDs in structure or toxicity

High-efficiency particulate air (HEPA) filtration: An extended-medium, dry-type filter in a rigid frame, having a minimum particle collection efficiency of 99.97% for particles with a mass median diameter of 0.3 µm when tested at a rated airflow in accordance with MIL STD 282 using IEST Recommended Standard RP-CC001.5.
Negative-pressure room: A room that is maintained at a lower pressure than the adjacent areas; therefore the net flow of air is into the room.
Pass-through: An enclosure with interlocking doors that is positioned between two spaces for the purpose of reducing particulate transfer while moving materials from one space to another. A pass-through serving negative-pressure rooms needs to be equipped with sealed doors.
Personal protective equipment (PPE): Items such as gloves, gowns, respirators, goggles, faceshields, and others that protect individual workers from hazardous physical or chemical exposures.
Positive-pressure room: A room that is maintained at a higher pressure than the adjacent areas; therefore, the net flow of air is out of the room.
Repackaging: The act of removing a product from its original primary container and placing it into another primary container, usually of smaller size.
Safety data sheet (SDS): An informational document that provides written or printed material concerning a hazardous chemical. The SDS is prepared in accordance with the HCS [previously known as a Material Safety Data Sheet (MSDS)].
Spill kit: A container of supplies, warning signage, and related materials used to contain the spill of an HD.
Standard operating procedure (SOP): Written procedures describing operations, testing, sampling, interpretation of results, and corrective actions that relate to the operations that are taking place.
Supplemental engineering control: An adjunct control (e.g., CSTD) that may be used concurrently with primary and secondary engineering controls. Supplemental engineering controls offer additional levels of protection and may facilitate enhanced occupational protection, especially when handling HDs outside of primary and secondary engineering controls (e.g., during administering).

Unclassified space: A space not required to meet any air cleanliness classification based on the International Organization for Standardization (ISO).

APPENDICES

Appendix 1: Acronyms

ACPH	Air changes per hour
API	Active pharmaceutical ingredient
ASTM	American Society for Testing and Materials
BSC	Biological safety cabinet
BUD	Beyond-use date
CACI	Compounding aseptic containment isolator
CAI	Compounding aseptic isolator
CDC	Centers for Disease Control and Prevention
C-PEC	Containment primary engineering control
C-SCA	Containment segregated compounding area
C-SEC	Containment secondary engineering control
CSP	Compounded sterile preparation
CSTD	Closed-system drug-transfer device
CVE	Containment ventilated enclosure
EPA	Environmental Protection Agency
GHS	Globally Harmonized System of Classification and Labeling of Chemicals
HCS	Hazard Communication Standard
HD	Hazardous drug
HEPA	High-efficiency particulate air
IV	Intravenous
LAFW	Laminar airflow workbench
NIOSH	National Institute for Occupational Safety and Health
ONS	Oncology Nursing Society
OSHA	Occupational Safety and Health Administration
PAPR	Powered air-purified respirator
PPE	Personal protective equipment
SDS	Safety Data Sheet
SOP	Standard operating procedure
ULPA	Ultra-low particulate air
UPS	Uninterrupted power source

Appendix 2: Examples of Designs for Hazardous Drug Compounding Areas[a]

Use	Optimal Primary and Secondary Control	Minimum ACPH	Limitations Primary and Secondary Control	Minimum ACPH	Notes for limitations
Nonsterile HD compounding	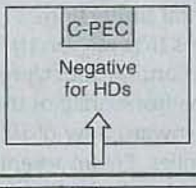 C-PEC Negative for HDs	12			
Sterile HD compounding	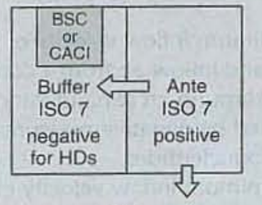 BSC or CACI Buffer ISO 7 negative for HDs ⟸ Ante ISO 7 positive OR	30	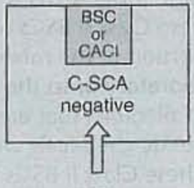 BSC or CACI C-SCA negative OR	12	Maximum BUD as described in <797> for segregated compounding area.
	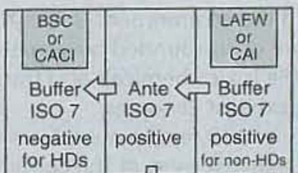 BSC or CACI / LAFW or CAI Buffer ISO 7 negative for HDs ⟸ Ante ISO 7 positive ⟸ Buffer ISO 7 positive for non-HDs		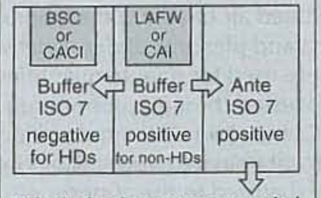 BSC or CACI / LAFW or CAI Buffer ISO 7 negative for HDs ⟸ Buffer ISO 7 positive for non-HDs ⟹ Ante ISO 7 positive This design is not recommended OR	30	If this design is in place, measures must be taken to avoid contamination of the positive-pressure buffer room.
			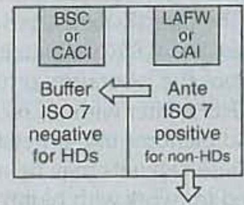 BSC or CACI / LAFW or CAI Buffer ISO 7 negative for HDs ⟸ Ante ISO 7 positive for non-HDs Typically used in oncology clinic settings.	30	Maximum BUD as described in <797>.
Both sterile HD and nonsterile HD compounding	A separate room for sterile and nonsterile compounding is recommended		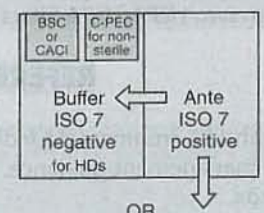 BSC or CACI / C-PEC for non-sterile Buffer ISO 7 negative for HDs ⟸ Ante ISO 7 positive OR	30	For rooms used for both sterile and nonsterile compounding, particle-generating activity must not be performed when sterile compounding is in process. C-PECs must be at least 1 meter apart.
			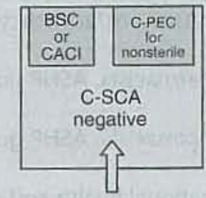 BSC or CACI / C-PEC for nonsterile C-SCA negative OR	12	Maximum BUD as described in <797> for segregated compounding area.
			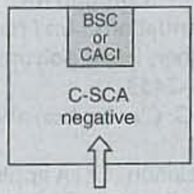 BSC or CACI C-SCA negative	12	Maximum BUD as described in <797> for segregated compounding area.

[a] The arrows indicate direction of airflow.

General Chapters

Appendix 3: Types of Biological Safety Cabinets

Class I: A BSC that protects personnel and the environment but does not protect the product/preparation. A minimum velocity of 75 linear feet/minute of unfiltered room air is drawn through the front opening and across the work surface, providing personnel protection. The air is then passed through a HEPA/ULPA (ultra-low particulate air) filter, either into the room or to the outside in the exhaust plenum, providing environmental protection.

Class II: Class II (Types A1, A2, B1, and B2) BSCs are partial barrier systems that rely on the movement of air to provide personnel, environmental, and product/preparation protection. Personnel and product/preparation protection are provided by the combination of inward and downward airflow captured by the front grille of the cabinet. Side-to-side cross-contamination of products/preparations is minimized by the internal downward flow of HEPA/ULPA filtered air moving toward the work surface and then drawn into the front and rear intake grilles. Environmental protection is provided when the cabinet exhaust air is passed through a HEPA/ULPA filter.

Type A1 (formerly, Type A): These Class II BSCs maintain a minimum inflow velocity of 75 feet/minute; have HEPA-filtered, down-flow air that is a portion of the mixed down-flow and inflow air from a common plenum; may exhaust HEPA-filtered air back into the laboratory or to the environment through an exhaust canopy; and may have positive-pressure contaminated ducts and plenums that are not surrounded by negative-pressure plenums. Type A1 BSCs are not suitable for use with volatile toxic chemicals and volatile radionucleotides.

Type A2 (formerly, Type B3): These Class II BSCs maintain a minimum inflow velocity of 100 feet/minute; have HEPA-filtered, down-flow air that is a portion of the mixed down-flow and inflow air from a common exhaust plenum; may exhaust HEPA-filtered air back into the laboratory or to the environment through an exhaust canopy; and have all contaminated ducts and plenums under negative pressure or surrounded by negative-pressure ducts and plenums. If these cabinets are used for minute quantities of volatile toxic chemicals and trace amounts of radionucleotides, they must be exhausted through properly functioning exhaust canopies.

Type B1: These Class II BSCs maintain a minimum inflow velocity of 100 feet/minute; have HEPA-filtered, down-flow air composed largely of uncontaminated, recirculated inflow air; exhaust most of the contaminated down-flow air through a dedicated duct exhausted to the atmosphere after passing it through a HEPA filter; and have all contaminated ducts and plenums under negative pressure or surrounded by negative-pressure ducts and plenums. If these cabinets are used for work involving minute quantities of volatile toxic chemicals and trace amounts of radionucleotides, the work must be done in the directly exhausted portion of the cabinet.

Type B2 (total exhaust): These Class II BSCs maintain a minimum inflow velocity of 100 feet/minute; have HEPA-filtered, down-flow air drawn from the laboratory or the outside; exhaust all inflow and down-flow air to the atmosphere after filtration through a HEPA filter without recirculation inside the cabinet or return to the laboratory; and have all contaminated ducts and plenums under negative pressure or surrounded by directly exhausted negative-pressure ducts and plenums. These cabinets may be used with volatile toxic chemicals and radionucleotides.

Class III: The Class III BSC is designed for work with highly infectious microbiological agents and other hazardous operations. It provides maximum protection for the environment and the worker. It is a gas-tight enclosure with a viewing window that is secured with locks and/or requires the use of tools to open. Both supply and exhaust air are HEPA/ULPA filtered. Exhaust air must pass through two HEPA/ULPA filters in series before discharge to the outdoors.

REFERENCES

1. American College of Occupational and Environmental Medicine: ACOEM Task Force on Reproductive Toxicology. Reproductive and developmental hazard management guidance. April 26, 2011. http://www.acoem.org/Reproductive_Developmental_Hazard_Management.aspx.
2. American Society of Clinical Oncology. Worker safety when handling hazardous drugs is focus of statement by oncology societies. March 3, 2015. http://www.asco.org/advocacy/worker-safety-when-handling-hazardous-drugs-focus-statement-oncology-societies.
3. American Society of Health-System Pharmacists. ASHP guidelines on compounding sterile preparations. *Am J Health-Syst Pharm.* 2014;71(2):145–166.
4. American Society of Health-System Pharmacists. ASHP guidelines on handling hazardous drugs. *Am J Health-Syst Pharm.* 2006; 63:1172–1193.
5. Baker EL, editor. Surveillance in occupational health and safety. *Am J Public Health.* 1989;79(Suppl.):1–63.
6. Chaffee BW, Armitstead JA, Benjamin BE, Cotugno MC, Forrey RA, Hintzen BL, et al. Guidelines for the safe handling of hazardous drugs: consensus recommendations. *Am J Health-Syst Pharm.* 2010;67(18):1545–1546.
7. Connor TH. Permeability of nitrile rubber, latex, polyurethane, and neoprene gloves to 18 antineoplastic drugs. *Am J Health-Syst Pharm.* 1999;56(23):2450–2453.
8. Connor TH, Mackenzie BA, DeBord DG. Clarification about hazardous drugs. *Am J Health-Syst Pharm.* 2012;69(22):1949–1950.
9. Controlled Environment Testing Association. CETA application guide for informational notes to meet the NSF/ANSI 49:2010a standard requirements CAG-010-2011. July 1, 2011. Raleigh, NC: CETA; 2011.

10. Controlled Environment Testing Association. CETA application guide for the use of surface decontaminants in biosafety cabinets CAG-004-2007. January 30, 2007. Raleigh, NC:ETA;2007.
11. Controlled Environment Testing Association. CETA compounding isolator testing guide, CAG-002-2006. Revised December 8, 2008.Raleigh, NC: CETA; 2008.
12. Controlled Environment Testing Association. CETA CAG-005-2007 servicing hazardous drug compounding primary engineering controls. Raleigh, NC: CETA; 2007.
13. Centers for Disease Control and Prevention. Biosafety in microbiological and biomedical laboratories (BMBL) 5th edition. Page last updated: March 13, 2015. Atlanta, GA: CDC, 2015. http://www.cdc.gov/biosafety/publications/bmbl5.
14. Centers for Disease Control and Prevention. Workplace safety and health: *Chemotherapy drug exposures at an oncology clinic—Florida*. June 2012. Atlanta, GA: CDC; 2012 http://www.cdc.gov/niosh/hhe/reports/pdfs/2009-0148-3158.pdf.
15. Centers for Disease Control and Prevention. Hand hygiene in healthcare settings. Page last updated: May 1, 2015. Atlanta, GA: CDC; 2015. http://www.cdc.gov/handhygiene/.
16. Centers for Disease Control and Prevention. NIOSH Alert: preventing occupational exposures to antineoplastic and other hazardous drugs in health care settings Cincinnati, OH: Department of Health and Human Services, CDC; 2004.
17. NIOSH list of antineoplastic and other hazardous drugs in healthcare settings, 2014 Cincinnati, OH: Department of Health and Human Services, CDC; 2014.
18. Centers for Disease Control and Prevention. The National Personal Protective Technology Laboratory (NPPTL). Respirator trusted-source information. Section 3: ancillary respirator information. Atlanta, GA: CDC; 2014. http://www.cdc.gov/niosh/npptl/topics/respirators/disp_part/respsource3.html.
19. Centers for Disease Control and Prevention. Workplace solutions: medical surveillance for healthcare workers exposed to hazardous drugs. Department of Health and Human Services, CDC; 2012.
20. Centers for Disease Control and Prevention. Workplace solutions: personal protective equipment for health care workers who work with hazardous drugs. Cincinnati, OH: Department of Health and Human Services, CDC; 2009.
21. Centers for Disease Control and Prevention. Workplace solutions: safe handling of hazardous drugs for veterinary healthcare workers. Cincinnati, OH: Department of Health and Human Services, CDC; 2010.
22. Goodin S, Griffith N, Chen B, Chuk K, Daouphars M, Doreau C, et al. Safe handling of oral chemotherapeutic agents in clinical practice: recommendations from an international pharmacy panel. *J Oncol Pract.* 2011;7(1):7–12.
23. Hematology/Oncology Pharmacy Association. Ensuring healthcare worker safety when handling hazardous drugs: the joint position statement from the Oncology Nursing Society, the American Society of Clinical Oncology, and the Hematology/Oncology Pharmacy Association. 2015. http://www.hoparx.org/uploads/HOPA_ASCO_ONS_Joint_Position.pdf
24. International Society of Oncology Pharmacy Practitioners Standards Committee. ISOPP standards of practice. Safe handling of cytotoxics. *J Oncol Pharm Pract.* 2007;13 Suppl:1–81.
25. Massoomi F. The evolution of the CSTD. *Oncology Safety* 2015;12(2 suppl).
26. McDiarmid MA, Emmett EA. Biological monitoring and medical surveillance of workers exposed to antineoplastic agents. *Semin Occup Med.* 1987;2(2):109–117.
27. NST International. NSF/ANSI 49-2011. Biosafety cabinetry: design, construction, performance, and field certification. Annex E. 2011.
28. Neuss MN, Polovich M, McNiff K, Esper P, Gilmore TR, LeFebvre KB, et al. 2013 updated American Society of Clinical Oncology/Oncology Nursing Society chemotherapy administration safety standards including standards for the safe administration and management of oral chemotherapy, *Oncol Nursing Forum.* 2013;40(3):225–233.
29. Oncology Nursing Society. Safe handling of hazardous drugs. In: Polovich M, editor. 2nd ed. Pittsburgh, PA: *Oncology Nursing Society;* 2011.
30. Oncology Nursing Society, American Society of Clinical Oncology, and Hematology/Oncology Pharmacy Association. Joint position statement: ensuring healthcare worker safety when handling hazardous drugs. 2015. https://www.ons.org/advocacy-policy/positions/practice/hazardous-drugs
31. Occupational Safety and Health Administration, The Joint Commission, and NIOSH letter to hospitals, April 4, 2011. Washington, DC: United States Department of Labor. http://www.osha.gov/ooc/drug-letter.pdf.
32. Occupational Safety and Health Administration. Hospital respiratory protection program toolkit. OSHA publication number 3767-05 2015.
33. Occupational Safety and Health Administration. Occupational Safety and Health Standards: hazard communication. Washington, DC: United States Department of Labor; 2012. http://www.osha.gov/dsg/hazcom/standards.html.
34. Occupational Safety and Health Administration. Occupational Safety and Health Standards: access to employee exposure and medical records [29 CFR 1910.1020]. Washington, DC: United States Department of Labor.
35. Occupational Safety and Health Administration. Occupational Safety and Health Standards: hazardous waste operations and emergency response [29 CFR 1910.120]. Washington, DC: United States Department of Labor.
36. OSHA Technical Manual Controlling occupational exposure to hazardous drugs. Section VI, Chapter 2. Washington, DC: United States Department of Labor;1999.
37. Occupational Safety and Health Administration. Personal protective equipment. Washington, DC: United States Department of Labor; 2003. http://www.osha.gov/Publications/osha3151.html.
38. Occupational Safety and Health Administration. *Respiratory protection eTool* [29 CFR 1910.134]. Washington, DC: United States Department of Labor.

39. Occupational Safety and Health Administration. Occupational Safety and Health Standards: toxic and hazardous substances [CFR 1910.1200]. Washington, DC: United States Department of Labor; 2013. https://www.osha.gov/SLTC/hazardoustoxicsubstances/index.html
40. Power LA. Closed-system transfer devices for safe handling of injectable hazardous drugs. *Pharm Pract News*. New York: McMahon Publishing Group; June 2013;1-16.
41. Power LA, Sessink PJM, Gesy K, Charbonneau F. Hazardous drug residue on exterior vial surfaces: evaluation of a commercial manufacturing process. *Hosp Pharm*. 2014;49(4):355–362.
42. Sessink PJM, Trahan J, Coyne JW. Reduction in surface contamination with cyclophosphamide in 30 US hospital pharmacies following implementation of a closed-system drug transfer device. *Hosp Pharm*. 2013;48(3):204–212.
43. University HealthSystem Consortium. UHC consensus statement: model hazardous drug safety plan for institutions. Chicago, IL: UHC; October 2009, revised January 2011.
44. Watts D. Gloves as PPE: standards for permeation and penetration. *Clean Air Containment Rev*. Issue 2;April 2010:16-20.
45. Wesdock JC, Sokas RK. Medical surveillance in work-site safety and health programs. *Am Fam Physician*. 2000;61(9):2785–2790.

● (Official 1-Jul-2018)

⟨801⟩ POLAROGRAPHY

Polarography is an electrochemical method of analysis based on the measurement of the current flow resulting from the electrolysis of a solution at a polarizable microelectrode, as a function of an applied voltage. The polarogram (see *Figure 1*) obtained by this measurement provides qualitative and quantitative information on electro-reducible and electro-oxidizable substances. The normal concentration range for substances being analyzed is from 10^{-2} molar to 10^{-5} molar.

In direct current (dc) polarography, the microelectrode is a dropping mercury electrode (DME) consisting of small reproducible drops of mercury flowing from the orifice of a capillary tube connected to a mercury reservoir. A saturated calomel electrode (SCE) with a large surface area is the most commonly employed reference electrode. As the voltage applied to the cell increases, only a very small residual current flows until the substance under assay undergoes reduction or oxidation. Then the current increases, at first gradually, then almost linearly with voltage, and it gradually reaches a limiting value as is shown in *Figure 1*.

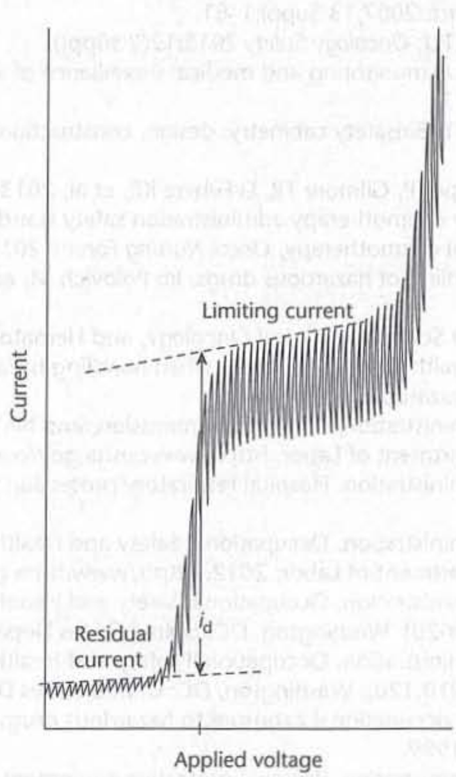

Fig. 1. Typical Polarogram Showing Change in Current Flow with Increasing Potential Applied to the Dropping Mercury Electrode.

On the initial rising portion of the polarographic wave, the increased flow of current results in a decrease in the concentration of the electro-active species at the electrode surface. As the voltage and current increase, the concentration of the reactive species decreases further to a minimal value at the electrode surface. The current is then limited by the rate at which the reacting species can diffuse from the bulk of the solution to the surface of the microelectrode. The final current rise is caused by the reaction of the supporting electrolyte. This large concentration of electrolyte is inert within the potential range used in the analysis, and it prevents the reactive species from reaching the electrode by electrical migration, thus assuring that the limiting current is diffusion-controlled.

Since, in the case of the DME, the electrode surface is being constantly renewed in a cyclic fashion, the current increases from a small value as the drop begins to form to a maximum value as the drop falls. By the use of a suitable recorder to measure the current, the characteristic saw-toothed record is obtained. The limiting current is the sum of the residual and the diffusion currents. The residual current is subtracted from the limiting current to give the wave height.

ILKOVIC EQUATION

The linear relationship between the diffusion current (i_d) and the concentration of electro-active species is shown by the Ilkovic equation:

$$i_d = 708nD^{1/2}Cm^{2/3}t^{1/6}$$

in which i_d is the maximum current in microamperes; n is the number of electrons required per molecule of electro-active substance; D is its diffusion coefficient, in square cm per second; C is the concentration, in millimoles per L; m is the rate of mercury flow from the DME, in mg per second; and t is the drop time, in seconds.

Modern polarographs are equipped with recorders capable of following the current during the latter portion of the drop life; consequently, the maximum of the oscillations is the measure of the current. When the current is measured only at the end of the drop life, the technique is termed sampled dc polarography. In this case, only the maximum currents are recorded and oscillations due to drop growth are not observed.

For instruments equipped with galvanometers to measure the current or recorders operated in a damped mode, the saw-toothed waves correspond to oscillations about the average current. In the latter case, the average of the oscillations is the measure of the current. For polarograms obtained in this manner, the i_d given by the Ilkovic equation is the average current in microamperes observed during the life of the drop, when the coefficient 708 is replaced by 607.

CONTROL OF THE DIFFUSION CURRENT

The Ilkovic equation identifies the variables that must be controlled to ensure that the diffusion current is directly proportional to the concentration of electro-active material. At 25° the diffusion coefficients for aqueous solutions of many ions and organic molecules increase 1% to 2% per degree rise in temperature. Thus the temperature of the polarographic cell must be controlled to within ±0.5°. The quantities m and t depend upon the dimensions of the capillary and the height of the mercury column above the electrode. Although results obtained with different capillaries can be compared if the product $m^{2/3}t^{1/6}$ is known, it is advisable to use the same capillary with a constant head of mercury during a series of analyses. The diffusion current is proportional to the square root of the height of the mercury column. A mercury reservoir with a diameter greater than 4 cm prevents any significant drop in the mercury level during a series of runs.

The capillary for the DME has a bore of approximately 0.04 mm and a length of 6 cm to 15 cm. The height of the mercury column, measured from the tip of the capillary to the top of the mercury pool, ranges from 40 cm to 80 cm. The exact length of the capillary and the height of the mercury column are adjusted to give a drop-time of between 3 and 5 seconds at open circuit with the capillary immersed in the test solution.

Equipment is available that allows controlled drop-times of fractions of a second to several seconds. As detail within a polarogram is related to the number of drops delivered during a given potential change, such short drop-times allow more rapid recording of the polarogram.

The current flowing through the test solution during the recording of a polarogram is in the microampere range. Thus, the current flow produces negligible changes in the test solution and several polarograms can be run on the same test solution without significant differences.

HALF-WAVE POTENTIAL

The half-wave potential ($E_{1/2}$) occurs at the point on the polarogram one-half the distance between the residual current and the limiting current plateau. This potential is characteristic of the electro-active species and is largely independent of its concentration or the capillary used to obtain the wave. It is dependent upon the solution composition and may change with variations in the pH or in the solvent system or with the addition of complexing agents. The half-wave potential thus serves as a criterion for the qualitative identification of a substance.

The potential of the DME is equal to the applied voltage versus the reference electrode after correction for the iR drop (that potential need to pass the current, i, through the solution with a resistance R). It is especially important to make this correction

for nonaqueous solutions, which ordinarily possess high resistance, if an accurate potential for the DME is needed. Correction of the half-wave potential is not required for quantitative analysis. Unless otherwise indicated, it is to be understood that potentials represent measurements made against the SCE.

REMOVAL OF DISSOLVED OXYGEN

Inasmuch as oxygen is reduced at the DME in two steps, first to hydrogen peroxide and then to water, it interferes where polarograms are to be made at potentials more negative than about 0 volt versus SCE, and must be removed. This may be accomplished by bubbling oxygen-free nitrogen through the solution for 10 to 15 minutes immediately before recording the wave, the nitrogen first having been "conditioned" to minimize changes due to evaporation, by being passed through a separate portion of the solution.

It is necessary that the solution be quiet and vibration-free during the time the wave is recorded, to ensure that the current is diffusion-controlled. Therefore, the nitrogen aeration should be stopped and the gas be directed to flow over the surface of the solution before a polarogram is recorded.

In alkaline media, sodium bisulfite may be added to remove oxygen, provided the reagent does not react with other components of the system.

MEASUREMENT OF WAVE HEIGHT

To use a polarogram quantitatively, it is necessary to measure the height of the wave. Since this is a measure of the magnitude of the diffusion current, it is measured vertically. To compensate for the residual current, the segment of the curve preceding the wave is extrapolated beyond the rise in the wave. For a well-formed wave where this extrapolation parallels the limiting current plateau, the measurement is unambiguous. For less well-defined waves, the following procedure may be used unless otherwise directed in the individual monograph. Both the residual current and the limiting current are extrapolated with straight lines, as shown by the graph (*Figure 1*). The wave height is taken as the vertical distance between these lines measured at the half-wave potential.

PROCEDURE

[*Caution—Mercury vapor is poisonous, and metallic mercury has a significant vapor pressure at room temperature. The work area in which mercury is used should be constructed in such a way that any spilled or spattered droplets of mercury can be completely recovered with relative ease. Scrupulously clean up mercury after each use of the instrument. Work in a well-ventilated laboratory, taking care to clean up any spilled mercury.*]

Transfer a portion of the final dilution of the substance being assayed to a suitable polarographic cell immersed in a water bath regulated to 25 ± 0.5°. Pass a stream of nitrogen through the solution for 10 to 15 minutes to remove dissolved oxygen. Start the mercury dropping from the capillary, insert the capillary into the test solution, and adjust the height of the mercury reservoir. Switch the flow of nitrogen to pass over the surface of the solution, and record the polarogram over the potential range indicated in the individual monograph, using the appropriate recorder or galvanometer sensitivity to give a suitable wave. Measure the height of the wave, and unless otherwise directed in the monograph, compare this with the wave height obtained with the appropriate USP Reference Standard, measured under the same conditions.

PULSE POLAROGRAPHY

In conventional dc polarography, the current is measured continuously as potential is applied as a linear ramp (see *Figure 2*).

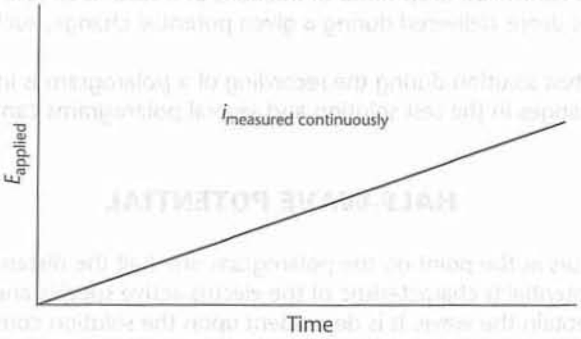

Fig. 2. Direct Current (dc) Polarography.

This current is composed of two elements. The first, the diffusion (faradaic) current, is produced by the substance undergoing reduction or oxidation at the working electrode, and is directly proportional to the concentration of this substance. The sec-

ond element is the capacitative current (charging of the electrochemical double layer). The changes in these currents as the mercury drop varies in size produce the oscillations present in typical dc polarograms.

In normal pulse polarography, a potential pulse is applied to the mercury electrode near the end of the drop life, with the drop being held at the initial potential during growth period (see *Figure 3).*

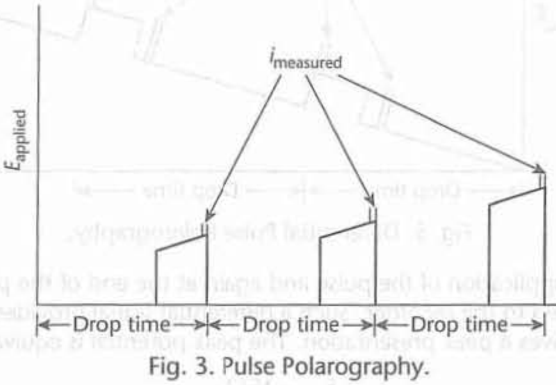

Fig. 3. Pulse Polarography.

Each succeeding drop has a slightly higher pulse applied to it, with the rate of increase being determined by the selected scan rate. The current is measured at the end of the pulse where the capacitative current is nearly zero, and thus primarily faradaic current is measured (see *Figure 4).*

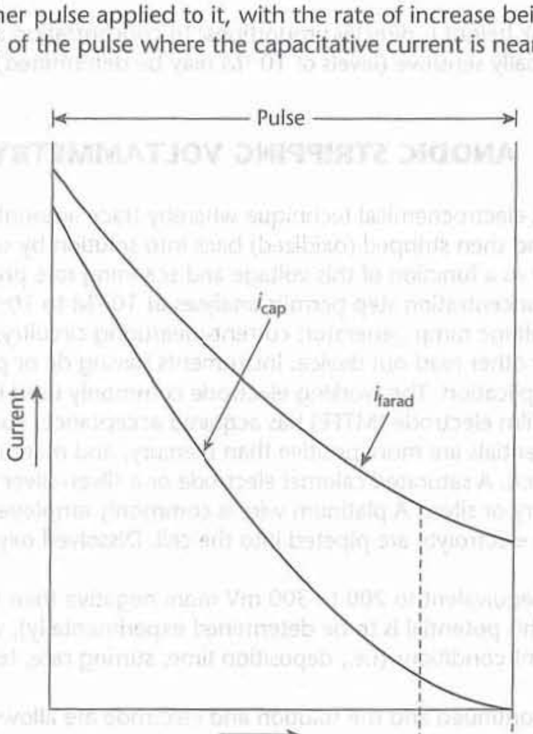

Fig. 4. Plot of Current Versus Time in Pulse Polarography.

In addition, since the pulse is applied for only a short duration, the diffusion layer is not depleted as extensively as in dc polarography and larger current levels are obtained for equivalent concentrations. Concentrations as low as 10^{-6} M can be measured, providing approximately a ten-fold increase in sensitivity over that with dc polarography. Limiting current values are more easily measured, since the waves are free from oscillations.

Differential pulse polarography is a technique whereby a fixed-height pulse applied at the end of the life of each drop is superimposed on a linear increasing dc ramp (see *Figure 5).*

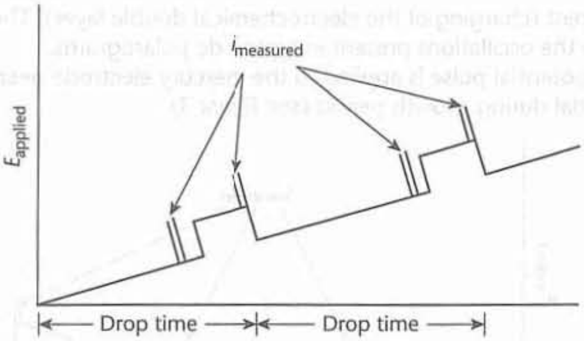

Fig. 5. Differential Pulse Polarography.

Current flow is measured just before application of the pulse and again at the end of the pulse. The difference between these two currents is measured and presented to the recorder. Such a differential signal provides a curve approximating the derivative of the polarographic wave, and gives a peak presentation. The peak potential is equivalent to:

$$E_{1/2} - \Delta E/2$$

where ΔE is the pulse height. The peak height is directly proportional to concentration at constant scan rates and constant pulse heights. This technique is especially sensitive (levels of 10^{-7}M may be determined) and affords improved resolution between closely spaced waves.

ANODIC STRIPPING VOLTAMMETRY

Anodic stripping voltammetry is an electrochemical technique whereby trace amounts of substances in solution are concentrated (reduced) onto an electrode and then stripped (oxidized) back into solution by scanning the applied voltage anodically. The measurement of the current flow as a function of this voltage and scanning rate provides qualitative and quantitative information on such substances. The concentration step permits analyses at 10^{-7}M to 10^{-9}M levels.

Basic instrumentation includes a voltage ramp generator; current-measuring circuitry; a cell with working, reference, and counter electrodes; and a recorder or other read-out device. Instruments having dc or pulse-polarographic capabilities are generally quite adequate for stripping application. The working electrode commonly used is the hanging mercury drop electrode (HMDE), although the mercury thin-film electrode (MTFE) has acquired acceptance. For analysis of metals such as silver, platinum, and gold, whose oxidation potentials are more positive than mercury, and mercury itself, the use of solid electrodes such as platinum, gold, or carbon is required. A saturated calomel electrode or a silver–silver chloride electrode serves as the reference except for the analysis of mercury or silver. A platinum wire is commonly employed as the counter electrode.

Test specimens containing suitable electrolyte are pipeted into the cell. Dissolved oxygen is removed by bubbling nitrogen through the cell for 5 to 10 minutes.

Generally, an electrolysis potential equivalent to 200 to 300 mV more negative than the half-wave potential of the material to be analyzed is applied (although this potential is to be determined experimentally), with stirring for 1 to 10 minutes. For reproducible results, maintain constant conditions (i.e., deposition time, stirring rate, temperature, specimen volume, and drop size if HMDE is used).

After deposition, the stirring is discontinued and the solution and electrode are allowed to equilibrate for a short period. The potential is then rapidly scanned anodically (10 mV/second or greater in dc polarography and 5 mV/second in differential pulse polarography). As in polarography, the limiting current is proportional to concentration of the species (wave height in dc and pulse; peak height in differential pulse), while the half-wave potential (dc, pulse) or peak potential (differential pulse) identifies the species. It is imperative that the choice of supporting electrolyte be made carefully in order to obtain satisfactory behavior. Quantitation is usually achieved by a standard addition or calibration method.

This technique is appropriate for trace-metal analysis, but has limited use in organic determinations, since many of these reactions are irreversible. In analyzing substances such as chloride, cathodic stripping voltammetry may be used. The technique is the same as anodic stripping voltammetry, except that the substance is deposited anodically and then stripped by a cathodic voltage scan.

⟨811⟩ POWDER FINENESS

The particle size distribution should be estimated by *Particle Size Distribution Estimation by Analytical Sieving* ⟨786⟩ or by application of other methods where practical. A simple descriptive classification of powder fineness is provided in this chapter. For practical reasons, sieves are commonly used to measure powder fineness. Sieving is most suitable where a majority of the parti-

cles are larger than about 75 μm, although it can be used for some powders having smaller particle sizes where the method can be validated. Light diffraction is also a widely used technique for measuring the size of a wide range of particles.

CLASSIFICATION OF POWDER FINENESS

Where the cumulative distribution has been determined by analytical sieving or by application of other methods, powder fineness may be classified in the following manner:

x_{90} = particle dimension corresponding to 90% of the cumulative undersize distribution

x_{50} = median particle dimension (i.e., 50% of the particles are smaller and 50% of the particles are larger)

x_{10} = particle dimension corresponding to 10% of the cumulative undersize distribution

It is recognized that the symbol *d* is also widely used to designate these values. Therefore, the symbols d_{90}, d_{50}, and d_{10} may be used.

The following parameters may be defined based on the cumulative distribution. $Q_R(x)$ = cumulative distribution of particles with a dimension less than or equal to *x* where the subscript *R* reflects the distribution type.

R	Distribution Type
0	Number
1	Length
2	Area
3	Volume

Therefore, by definition:

1. $Q_R(x) = 0.90$ when $x = x_{90}$
2. $Q_R(x) = 0.50$ when $x = x_{50}$
3. $Q_R(x) = 0.10$ when $x = x_{10}$

An alternative but less informative method of classifying powder fineness is by use of the terms in the following table.

Classification of Powders by Fineness

Descriptive Term	X_{50} (μm)	Cumulative Distribution by Volume Basis, $Q_3(x)$
Coarse	>355	$Q_3(355) < 0.50$
Moderately Fine	180–355	$Q_3(180) < 0.50$ and $Q_3(355) \geq 0.50$
Fine	125–180	$Q_3(125) < 0.50$ and $Q_3(180) \geq 0.50$
Very Fine	≤125	$Q_3(125) \geq 0.50$

⟨821⟩ RADIOACTIVITY

Change to read:

▲1. INTRODUCTION
2. PERSONNEL TRAINING AND DOCUMENTATION
3. QUALIFICATION OF INSTRUMENTS
3.1 Installation Qualification
3.2 Operational Qualification
3.3 Performance Qualification
3.4 Geometry Testing
4. ONGOING PERFORMANCE TESTS OF INSTRUMENTS
4.1 Physical Inspections
4.2 System Parameters
4.3 Operational Tests
5. IDENTIFICATION OF RADIONUCLIDES
5.1 Half-Life Determination
5.2 Gamma-Ray Spectrometry
5.3 Beta-Emitter Analysis and Identification
5.4 Alpha Spectrometry

General Chapters

6. ASSAY OF RADIONUCLIDES
6.1 Measurement of Radioactivity Using a Dose Calibrator
6.2 Measurement of Radioactivity Using a Solid-State Detector
6.3 Measurement of Radioactivity Using Chromatographic Systems
6.4 Measurement of Radioactivity Using a Liquid Scintillation Counter
GLOSSARY
REFERENCES

1. INTRODUCTION

Radiopharmaceuticals and radioactive devices require specialized techniques in their production, testing, handling, dispensing, and administration in order to ensure optimal effectiveness and maintain safety for workers, patients, and the public. Hence, all operations involving these articles should be carried out by or under the supervision of personnel who have been appropriately trained in the handling of radioactive materials and appropriate instruments.

The facilities for the production, storage, and use of radioactive drugs and radioactive devices are generally subject to licensing by the U.S. Nuclear Regulatory Commission or Agreement State agency, or similar governmental agency outside the United States. Most radioactive drugs and radioactive devices are subject to other regulations relating to transportation, environmental release, and workplace safety.

USP monographs for radioactive articles include specifications for radionuclide identification and assay for radioactivity. Moreover, radioactivity counting assemblies or radiation detectors are required instruments for the determination of radionuclidic purity and radiochemical purity. The purpose of this general chapter is to provide standards for measurement of radioactivity, including instrument qualification, performance checks, identification of radionuclides and radionuclidic impurities, and assay of radionuclides.

Information regarding radioactivity is described in *Radioactivity—Theory and Practice* 〈1821〉, which includes definitions, types of decay, general considerations relating to radioactive decay, counting, radionuclide production, purity, labeling, and instrumentation for detection and measurement of radioactive emissions, as well as a glossary.

2. PERSONNEL TRAINING AND DOCUMENTATION

Personnel training should be completed in accordance with written policies and/or procedures. Documentation of the personnel training should be included in the Quality Assurance Program. The length of time to retain the documentation varies depending on the appropriate regulatory requirements.

3. QUALIFICATION OF INSTRUMENTS

Qualification of instruments should be completed in accordance with written policies and/or procedures. Documentation of the qualification of instruments should be included in the Quality Assurance Program. The length of time to retain the documentation varies depending on the applicable regulatory requirements.

3.1 Installation Qualification

Installation qualification (IQ) is to be performed upon installation of an instrument and after major repair. There are two categories in an IQ—visual inspection and operating environment. Visual inspection involves a check of the condition of the instrument to determine if it is ready to use. The inspection confirms that all cables are intact, the instrument is intact with no broken pieces/parts, and all components of the equipment are in working order. The operating environment for the device is checked for proper temperature, humidity, and power requirements. The operating environment should also be checked to avoid high background radioactivity. Temperatures are typically 10°–30° C and relative humidity ranges are generally 20%–90%. Shielding may be necessary to ensure that the background radiation has no negative effect on the instrument performance.

3.2 Operational Qualification

Operational qualification (OQ) is a check of operational specifications for the equipment, including equipment set-up, functional testing of subsystems, and proper overall operation. OQ should describe operational procedures for the equipment and is performed after IQ and after major repairs. OQ should include all appropriate tests to show that the instrument is capable of functioning properly. Typical examples of OQ include clock accuracy, high voltage, zero adjust, background response, and contamination check.

3.3 Performance Qualification

Performance qualification (PQ) demonstrates that the equipment is capable of performing tasks required in the operating environment and provides the intended results. PQ should describe the required performance tasks for the equipment and include all appropriate tests to demonstrate that the instrument is performing within its operating parameters. These PQ tests are done following the OQ tests. Additionally, some or all the PQ tests are performed routinely (e.g., daily, quarterly, semiannually, annually) to demonstrate the instruments continual acceptance for use. Typical PQ tests include constancy and relative response, accuracy, reproducibility (precision), system linearity, determination of "quench" curves in liquid scintillation counters, and supplier equivalence.

3.4 Geometry Testing

The purpose of the geometry test is to demonstrate correct readings of the test sample, accounting for differences in the container, volume, or position of the test sample compared to the radioactive calibration standard. Geometry testing should be performed at installation of the dose calibrator and for each type of vial and syringe used to contain the test sample. Testing should include the test sample holder. Corrections factors may be developed as needed.

4. ONGOING PERFORMANCE TESTS OF INSTRUMENTS

Performance and operational tests are completed periodically to ensure the instrument is capable of meeting specified criteria for accurate assays and that no changes have occurred since initial testing. Tests include physical inspection, measurement of system parameters, and operational tests with radioactive calibration sources. These tests should also be completed after repair. Regulatory agencies may require specific tests at a regular frequency. The following sections describe the performance tests using a dose calibrator as an example. Ongoing performance tests for other instruments used for radiation measurements should be designed as appropriate to each instrument, testing the parameters that are pertinent to ensuring the performance of the instrument, considering its application and the level of precision of measurement required. The same principles will apply to other instruments used for radiation measurements.

4.1 Physical Inspections

Ensure that the dose calibrator and associated accessories, such as source holders and well liners, are undamaged and that foreign objects are not present in the chamber. Prior to use, repair or replace any damaged components as required and remove all foreign objects.

4.2 System Parameters

The system electronics should be tested according to the manufacturer's diagnostic testing procedures. The results should meet the acceptance criteria detailed in the manufacturer's manual. These parameters typically include the high voltage on the chamber, the zero adjustment on the electrometer, verification of communication between components of the system, and the accuracy of the system clock.

If the manufacturer's diagnostic procedures are not available, then at a minimum the user should check, record, and trend the chamber high voltage and the measured value for the electrometer zero check. Small changes in the high voltage will identify system malfunctions that might not be apparent with the use of radioactive calibration sources, but will begin impacting higher activity readings. The system clock should be checked and should be accurate within one minute.

4.3 Operational Tests

BACKGROUND AND CONTAMINATION TEST

The purpose of this test is to determine the background radiation level and to ensure the absence of contamination that may affect measurements on the dose calibrator. Background radiation may fluctuate due to movement of sources near the chamber, as well as by contamination in or near the chamber, the liner, or the source holder. For this reason, this test should be performed with the liner and the source holder in the chamber. All radioactive sources should be well shielded or at a sufficient distance from the chamber. The background radiation level should be determined and recorded at initial installation, and periodically verified. The background should be recorded at least once on each day of use, or more frequently if necessary, using the most common radionuclide setting. It is especially important to verify if the minimum assayed quantity of radioactivity decreases.

CONSTANCY TEST

The purpose of this test is to ensure the constancy of the dose calibrator over time. This test should be performed on each day of use, and completed after the system tests outlined above. Typical radioactive calibration sources used in this test are Cesium–137 or Cobalt–60 contained within a solid matrix. Cobalt–57 might not be suitable because of its nominal half-life of less than one year. The radioactive calibration source is not required to have the same geometry as routine test samples. A single radioactive calibration source is sufficient for this check. The source is placed in the source holder and the reading recorded for the dedicated radionuclide setting, as well as for all other commonly used radionuclide settings. This ensures no drift in response for any setting. Results should be recorded and be within the appropriate range of the decay corrected value recorded during IQ. Control charts or other data representations should be used to identify and document trends.

ACCURACY TEST

The purpose of this test is to demonstrate the stability of the dose calibrator over the energy range used. This test should be performed annually or after the dose calibrator is repaired or moved. If the dose calibrator is used to measure the quantity of multiple radionuclides, two or three different radioactive calibration sources with different energies should be included to cover the expected energy range of the radionuclides. These calibration sources are typically contained in a solid matrix and do not necessarily match the geometry of routine test samples. If the dose calibrator is only used for a single radionuclide, or only for position emission tomography (PET) radionuclides, a single calibration source may be adequate. The quantity of radioactivity in the calibration source should be greater than 100 µCi (3.7×10^6 Bq). Sources used for this test should be traceable to a National Metrology Institute (NMI). Measurements of the calibration source activity are recorded and the average measured value is compared to the expected value. The measured value should be within the appropriate range of the expected value.

REPRODUCIBILITY TEST

The purpose of this test is to measure the precision of the dose calibrator and should be performed at least annually. The radioactive calibration source should have a half-life such that decay corrections are not required over the period of the test. The quantity of radioactivity in the calibration source should be greater than 100 µCi (3.7×10^6 Bq). An appropriate number of consecutive readings are recorded using the same geometry. Each of the measurements taken should be within an appropriate range of the mean of all the measurements.

LINEARITY TEST

The purpose of this test is to show that the response of the dose calibrator is linear across the range of radioactivity levels to be measured. This is especially critical at high levels of radioactivity where the measured radioactivity may differ from the true radioactivity due to saturation effects, and at low levels of radioactivity due to variations on the background radiation and changes in the source positioning. This test should be performed annually or after the dose calibrator has been repaired or moved.

The test is considered successful if the ratio of the measured radioactivity to the expected activity is within the appropriate range of the expected values. Three techniques may be employed for this test: decay, graded shield, and graded source. Use of graded shields is acceptable once an initial linearity test using the decay method is successfully completed. Refer to the manufacturer's recommendations on the use of the graded shields. The graded source method requires accurate measurements of volume or mass, and is not generally recommended.

Table 1 is an example of ongoing performance checks for dose calibrators.

Table 1. List of Performance Tests

Parameter	Daily[a]	Annually (at a minimum)
Physical inspection	Yes	N/A
System electronics	Yes	N/A
Clock accuracy	Yes	N/A
High voltage	Yes	N/A
Zero adjust	Yes	N/A
Background response/contamination check	Yes	N/A
Radioactive calibration source (constancy and relative response)	Yes	N/A
Accuracy	See footnote[b]	Yes
Reproducibility (precision)	See footnote[b]	Yes

[a] At the beginning of each day of use.
[b] This is required after repair.

Table 1. List of Performance Tests *(Continued)*

Parameter	Daily[a]	Annually (at a minimum)
System linearity	See footnote[b]	Yes

[a] At the beginning of each day of use.
[b] This is required after repair.

5. IDENTIFICATION OF RADIONUCLIDES

5.1 Half-Life Determination

The half-life is an identifying characteristic of a radionuclide. The half-life is determined by measuring the quantity of radioactivity in the test sample as a function of time. The approximate half-life may be used to confirm the radionuclidic identity. Perform the measurements using an appropriately calibrated instrument, such as a quantitative radioactivity detector, provided the quantity of radioactivity is within the linear range of the instrument throughout the measurements and the geometry of the test sample is not changed during the measurements.

The test sample may be used directly, or diluted and/or dried in a capsule as needed. The test sample is prepared in a manner that avoids losses during handling. If the test sample is a liquid or solution, the sample is held in a closed container. If the test sample is a residue from drying in a capsule, the sample is protected by a cover consisting of a sheet of adhesive cellulose acetate or other material. The quantity of radioactivity in the test sample should be sufficient to allow measurements over the time frame of the test. If necessary, correction for dead-time losses may be applied. The measured half-life should be within the range of the expected half-life as defined in each particular application of this test.

5.2 Gamma-Ray Spectrometry

The gamma-ray emission spectrum may be used to identify and quantify gamma-emitting radionuclides. The detector should be calibrated with a radioactive calibration source traceable to a NMI. The calibration source used to determine the efficiency of the detector should have a sufficient quantity of radioactivity to produce an adequate number of counts for each photopeak used in the calibration. The calibration source and the test sample should be measured with the same geometry and distance from the detector. It is critical that the geometry, including vial type and volume, be the same because these factors affect the amount of incident radiation on the detector. Photopeaks in the test sample should be comparable to those in the calibration source, both in terms of energy and intensity. The presence of unknown peaks or changes in peak abundance is indicative of impurities. Ensure that background radiation levels remain constant during the measurement, as changes may result in unknown peaks. Counting time or shielding should be optimized to achieve the necessary required minimum detectable activity to meet test specifications. It may be necessary to allow the radioactivity in the test sample to decay before it is possible to detect impurities at the required levels. There may also be short-lived impurities present, so an analysis should be completed to identify impurities and their half-lives to ensure the sample is assayed prior to their decay. Positron-emitting radionuclides typically cannot be differentiated because their emitted energy (511 keV) is the same for each radionuclide; thus, gamma-ray spectrometry is not a recommended prerelease test for radionuclidic identity for PET radionuclides. Some positron-emitting radionuclides have characteristic gamma-ray emissions in addition to 511 keV, which may be used for purposes of identification (e.g., Ge-69 and Na-22). Performance tests of the gamma-spectroscopy system should be completed on each day of use to ensure the functionality of the system.

5.3 Beta-Emitter Analysis and Identification

The purpose of the beta-emitter analysis and identification is to determine the maximum energy of the beta particle, which is unique and can be used for identification. Beta-emitting radionuclides can be identified either by evaluation of their spectrum or by measuring their mass attenuation coefficients in a series of absorption foils and constructing an attenuation curve. Performance tests of the beta counting system should be completed on each day of use to ensure the functionality of the system.

5.4 Alpha Spectrometry

The alpha emission spectrum may be used to identify and quantify alpha-emitting radionuclides. Pure alpha emitters present unique challenges due to their low penetration distance and their toxicity, especially if they are volatile compounds that could create airborne radioactivity and therefore internal radiation exposure to the experimenter or operator. Alpha particles can be detected either by the use of proportional counters, scintillation detection using a silver-activated zinc sulfide phosphor, or by the techniques of liquid scintillation counting (LSC). Performance tests of the alpha spectroscopy system should be completed on each day of use to ensure the functionality of the system.

6. ASSAY OF RADIONUCLIDES

6.1 Measurement of Radioactivity Using a Dose Calibrator

Using a holder, the test sample is placed in the chamber of the dose calibrator at a given position. Once the response is stable, the radioactivity reading is taken. Performing measurements on the test sample with the same geometry as the calibration source provides the most accurate results; however, geometry correction factors may be developed and used as necessary. Refer to the manufacturer's recommendations for the maximum radioactivity that can be determined in the dose calibrator.

6.2 Measurement of Radioactivity Using a Solid-State Detector

The test sample is positioned in front of the detector or into the well of a well-type detector. The detector must be adequately shielded and calibrated using a radioactive calibration source traceable to an NMI.

6.3 Measurement of Radioactivity Using Chromatographic Systems

A scintillation detector can be used for dynamic radioactivity measurements (e.g., the eluate of a liquid chromatograph is directed over or through a detector). The quantity of radioactivity in the test sample should provide a count rate that is within the linear range of the detector.

6.4 Measurement of Radioactivity Using a Liquid Scintillation Counter

LSC is the standard laboratory method to quantify radioactivity of particle-emitting radionuclides, mostly beta- and alpha-emitting radionuclides. The sample to be analyzed may require a liquid scintillation fluid (cocktail) depending on the energy of the beta particle. The LSC detection method uses liquid scintillation cocktails to transform emitted radiation into detectable light photons. The sample to be analyzed is placed into a liquid scintillation vial and the cocktail is added in the required amount. While a sample that can be dissolved into the fluid is preferred, other samples can be assayed if the impact on the light output is quantified. The detector should be calibrated using an appropriate radioactive calibration source traceable to an NMI. The absorption of scintillation photons is called quench, and it is necessary to develop a "quench curve" during PQ and additional quench curves may be necessary for different types of samples to correct the counting efficiency. Performance tests of the LSC should be completed on each day of use to ensure the functionality of the system.

GLOSSARY

The following definitions apply to commonly encountered words and phrases when dealing with radioactivity.

Alpha particles (α): Positively charged particles emitted from nuclei during radioactive decay. Alpha particles are Helium-4 nuclei, consisting of two protons and two neutrons, but no electrons.

Beta particles (β^-): Negatively charged particles that are emitted from nuclei during radioactive decay. Beta particles are electrons.

Calibration factor: The coefficient used to convert the measured ionization chamber current to a nominal radioactivity. This term is often referred to as the "calibration coefficient".

Calibration time: Arbitrary time and date, if appropriate at which the specified amount of radioactivity is present.

Counting assembly: Consists of a sensing unit and an electronic scaling device. The sensing unit may be a Geiger-Müller tube, a proportional counter, a scintillation detector in which a photomultiplier tube is employed in conjunction with a scintillator, or a solid-state semiconductor.

Dose calibrator: A well-type ionization chamber commonly used to assay radiopharmaceuticals. Display units are typically in curies (µCi/mCi/Ci) or becquerels (kBq/MBq/GBq).

Gamma rays (γ-rays): Electromagnetic radiation emitted from nuclei during radioactive decay. Gamma rays have a wide range of energies. The gamma rays emitted from a given radionuclide are always at the same energy(ies) providing a unique signature that enables the identification of a gamma-emitting radionuclide.

Geiger-Müller counter: Often referred to as "G-M counter" or "Geiger counter". An instrument in which a high voltage potential is applied across a volume of inert gas for the purpose of collecting ions produced by a radiation field. The negative electrons are internally multiplied to produce a readily detectable current pulse. Display units are typically counts per minute (cpm) or milliroentgen per hour (mR/hr).

Geometry: The characteristics of a radioactive source (i.e., container type, container wall thickness, volume, and position of the container in the well chamber) that, along with the physical characteristics of the ionization chamber, affect the magnitude of the calibration coefficient for a specific radionuclide. The principal geometry considerations that may affect the accuracy of a source measurement in a dose calibrator are container configuration, source volume, position of the source in the chamber well, and the radionuclide itself. [NOTE—It is customary to compare a standardized preparation and radiopharmaceutical drug or preparation using identical geometry conditions for assay, identification, and other parameters. The validity of

the result is critically dependent upon the reproducibility of the spatial relationships of the source to the detector and its surroundings and upon the accuracy of the standardized preparation.]
Ionization chamber: An instrument in which an electric field is applied across a volume of inert gas for the purpose of collecting ions produced by a radiation field. The positive ions and negative electrons drift along the lines of force of the electric field, and are collected on electrodes, producing an ionization current. The most commonly used form of ionization chambers for measurement of the activities of radiopharmaceuticals is a well-type ionization chamber known as a dose calibrator.
Isobars: Nuclides with the same mass number (protons + neutrons).
Isomers: Atoms with the same number of protons and neutrons, but a different nuclear energy configuration. Short-lived radioactive isomers are generally referred to as metastable. Different isomers are different nuclides based on their nuclear energy configurations.
Isotones: Nuclides with the same number of neutrons and a different number of protons. Isotones are different elements with different atomic masses.
Isotopes: Nuclides with the same number of protons and a different number of neutrons. Isotopes are the same element with a different atomic mass.
Isotopic carrier (also referred to as carrier): A stable isotope of the element concerned either present in or added to the radioactive preparation in the same chemical form as the radionuclide.
Liquid scintillation counter (LSC): An instrument which detects scintillation light from the absorption of radiation energy in a scintillation liquid. This instrument is used primarily for beta-emitting radionuclides that do not also emit gamma photons. For best results, the radioactive sample should be soluble in the scintillation liquid.
Minimum detectable activity: Smallest quantity of radioactivity that can be detected above the background with a specified level of confidence.
National Metrology Institute (NMI): A measurement standards body, which is a laboratory of metrology that establishes standards for a country or organization. For example, National Institute of Standards and Technology (NIST) is the NMI for the United States.
Nuclide: An atom with a specific number of protons and neutrons in a given nuclear energy state.
Positrons (β^+): Positively charged particles emitted from a nucleus during radioactive decay. Positrons are anti-electrons.
Radioactivity: (1) The spontaneous transformation of nuclei characterized by the emission of particles or photons. Radioactivity is typically described as atoms undergoing radioactive decay per unit time (or disintegrations per unit time). (2) The quantity of radioactive material, as measured in units of curies (U.S. units) or becquerels (SI units). The quantity of radioactive material may also be referred to as activity.
Radiochemical identity: The molecular structure of the intended active radiopharmaceutical ingredient, which is present in the radiopharmaceutical preparation.
Radiochemical purity: The ratio, expressed as a percentage, of the radioactivity of the intended active radiopharmaceutical ingredient to the total radioactivity of all radioactive ingredients and impurities present in the radiopharmaceutical preparation.
Radioisotope: A radioactive atom, generally used in the context of an isotope of an element.
Radionuclide: An unstable nuclide that undergoes radioactive decay; a radioactive nucleus. The terms radionuclide and radioisotope are commonly used interchangeably.
Radionuclidic identity: The intended radionuclide in the radiopharmaceutical preparation.
Radionuclidic purity: The ratio, expressed as a percentage, of the radioactivity of the intended radionuclide to the total radioactivity of all radionuclides in the radiopharmaceutical preparation.
Radiopharmaceutical (radiopharmaceutical preparation/radioactive drug): A finished dosage form that contains a radioactive substance in association with one or more other ingredients and that is intended to diagnose, stage a disease, monitor treatment, or provide therapy. A radiopharmaceutical includes any nonradioactive reagent kit or radionuclide generator that is intended to be used in the preparation of any such substance. The terms radiopharmaceutical and radioactive drug are commonly used interchangeably.
Scintillation crystal counter: An instrument consisting of a crystal scintillator, such as NaI (Tl), with attached photomultiplier tube and associated electronics. Scintillation light produced from the absorption of gamma and X-rays in the crystal is converted to electrons and amplified in the photomultiplier tube. The resultant current pulse may be further analyzed with regard to photon energy. A commonly used form of this instrument that has a hole in the crystal of sufficient size to allow placement of a test tube or similar container is known as a "well counter".
Semiconductor detector: An instrument consisting of a semiconductor material, such as silicon or germanium crystals, that detects ionizing radiation through generation of charge carriers (passage of electrons through holes). The current pulse produced by migration of these charge carriers, under the influence of a voltage potential across the material, can be further amplified and analyzed to determine the quantity and energy of the incident radiation.
Solid-state detector: A crystal-based detector, in contrast to a gas-based detector. Often is used as a synonym for a semiconductor detector.
Strength: The radioactivity concentration of the radiopharmaceutical at the calibration time. The unit of strength is the amount of radioactivity on a volume basis (e.g., mCi/mL or MBq/mL).
Total radioactivity: The radioactivity of the radionuclide, expressed per unit (e.g., vial, capsule, ampoule, generator, and others) at the calibration time.

Validation: Establishment of documented evidence that a method, process, or system meets its intended requirements.
Verification: Confirmation that an established method, process, or system meets predetermined acceptance criteria.
X-rays: A type of electromagnetic radiation emitted from the electron orbitals. While they do not arise from the nucleus they are often present immediately following a decay event if there are interactions between the emitted radiation and the orbital electrons.

REFERENCES

1. American Society for Testing and Materials (ASTM). Active Standard ASTM D3648. Standard practices for the measurement of radioactivity. West Conshohocken, PA: ASTM International; 2011.
2. American Association of Physicists in Medicine (AAPM). AAPM Report No. 181. The selection, use, calibration, and quality assurance of radionuclide calibrators used in nuclear medicine. College Park, MD: AAPM; June 2012.▲USP40

⟨823⟩ POSITRON EMISSION TOMOGRAPHY DRUGS FOR COMPOUNDING, INVESTIGATIONAL, AND RESEARCH USES

INTRODUCTION

Radionuclides used in positron emission tomography (PET) typically possess short physical half-lives, $T_{1/2}$ (e.g., $T_{1/2}$ of ^{15}O = 2.03 min, ^{62}Cu = 9.67 min, ^{13}N = 9.96 min, ^{11}C = 20.4 min, ^{68}Ga = 67.7 min, ^{18}F = 109.8 min, ^{64}Cu = 12.7 h). As a result, these radionuclides usually are produced using particle acceleration techniques (e.g., cyclotrons) or from generators, and then are processed into the final PET drug product in close proximity to the site where the PET procedure will be conducted.

The short half-lives of PET radionuclides create unique constraints for the preparation and testing of PET drug products. This chapter describes guidelines for making and testing PET drug products based on the following constraints:

- It is not possible to complete all testing before the use of PET drug products.
- An entire batch or sub-batch of a PET drug product may be contained in a single vial. Samples withdrawn for quality control (QC) testing are representative of the entire batch or sub-batch.
- An entire batch or sub-batch may be administered to a single patient.
- The mass of the PET drug in a PET drug product usually ranges from nanogram to microgram quantities.
- PET drug products do not enter a traditional drug distribution chain. Instead, PET drug products are used in-house or are delivered to the point of use by dedicated couriers.
- Small-scale facilities for the preparation of PET drug products have limited personnel and resources, which require the following:
  - — Allowance for multiple operations in one area with adequate controls;
  - — Allowance for the making and testing of multiple PET drug products using shared equipment;
  - — Appropriate requirements for aseptic operations;
  - — Appropriate requirements for system suitability and other day-of-use activities;
  - — QC requirements for components, materials, and supplies;
  - — Self-verification of significant steps in radionuclide production, PET drug production, or compounding and testing; and
  - — Single-person oversight of production and compounding, review of batch records, and release authorization.

The scope of this chapter includes the production and compounding of PET drug products for human administration as used (a) according to state-regulated practice of medicine and pharmacy, (b) according to an approved investigational new drug (IND) application (see 21 CFR 312), and (c) according to research uses under the supervision of a Radioactive Drug Research Committee (RDRC; see 21 CFR 361). The scope of this chapter does not include dispensing activities as defined in other USP general chapters.

PERSONNEL

Sufficient numbers of personnel with the appropriate education, training, and experience are needed for the preparation and testing of PET drug products. The number depends on the size and complexity of the operations executed at each facility.

Training Requirements

Personnel should be trained before they begin to make and test PET drug products. Training can be performed by various methods, including live instruction, audio-video instruction, and study of publications. Training should address but is not limi-

General Chapters

ted to radionuclide production techniques, synthetic and purification methods, materials, components, reagents, stock solutions, automated and manual apparatus used to make PET drug products, and QC methods, including equipment, software, and documentation. Training must be documented.

Aseptic Operations Training

Training should address aseptic manipulations as well as the techniques and equipment used to achieve and maintain International Organization for Standardization (ISO) Class 5 environmental conditions. Training also should address all aseptic operations, including the assembly of sterile components, compounding, and filtration. Manipulations of sterile solutions should be performed by operators who are qualified to use aseptic techniques (see *Facilities and Equipment* below).

Personnel involved in aseptic operations should be evaluated periodically by aseptic simulations in which a microbiological growth medium is used to assess the quality of the aseptic operation. Aseptic simulations should provide the following:

- Include all manipulations required for the aseptic assembly of the PET drug product vial assembly (e.g., vial, filter, and syringe assembly, etc.).
- Represent worst-case scenarios for aseptic operations.
- Be performed in triplicate to qualify a new operator. Each operator should be requalified annually by conducting at least one media fill.
- Be performed any time procedures are changed significantly.

After the simulation process, the media should show the absence of contamination after incubation at a suitable temperature for 14 days. An operator who fails written assessments or whose aseptic simulations result in microbial growth should be immediately re-instructed and re-evaluated to ensure correction of aseptic practice deficiencies.

QUALITY ASSURANCE

QA is a broad concept that covers all matters that influence identity, strength, quality, and purity of a PET drug product. QC is a subset of QA that deals with testing of materials and PET drug products to determine if they meet acceptance criteria. The QA function typically consists of oversight activities, and the QC function consists of execution activities.

QC functions include the following.

- Evaluate each lot of incoming material to ensure that it meets its established specifications before use in the preparation or testing of PET drug products.
- Evaluate each batch of a PET drug product to ensure the batch meets its established specifications before authorizing the final release of the batch.

The oversight functions associated with QA include the following:

- Review completed batch records for accuracy and completeness.
- Approve procedures, specifications, processes, and methods.
- Ensure that personnel are properly trained and qualified, as appropriate.
- Ensure that PET drug products have adequately defined identity, strength, quality, and purity.
- Ensure that changes to component quality, suppliers, changes to production procedures, and changes to testing procedures and specifications are appropriate and implemented properly.
- Investigate errors and ensure that appropriate corrective and preventive actions are taken to prevent their recurrence.
- Handle complaints.
- Ensure that the PET drug products are produced, tested, labeled, released, and distributed according to the facility's established procedures and practices for PET drug products.
- Conduct periodic audits to monitor compliance with established procedures and practices for PET drug products.

Personnel at the facility may perform both QA and QC functions.

FACILITIES AND EQUIPMENT

Facilities should be adequate for the production, compounding, and testing of PET drug products. Work areas should be organized to prevent cross-contamination, mix-ups, and errors, especially in areas used for making multiple PET drug products. Work areas should be periodically cleaned to prevent the contamination of equipment, materials, components, or PET drug products by personnel or environmental conditions that could reasonably be expected to adversely affect PET drug product quality. These requirements should be described in written procedures, and their routine execution should be documented.

Environmental Controls for Parenteral PET Drug Products

Because the sterility test results for parenteral PET drug products are obtained after release, facilities and equipment should ensure a sterile PET drug product.

ASEPTIC WORKSTATION

The primary environmental control for aseptic operations is a high-efficiency particulate air (HEPA) filter that is capable of producing air with a cleanliness rating of ISO Class 5. This can be achieved with a laminar airflow workstation, aseptic isolator, biological safety cabinet, or other suitable device (generically, aseptic workstations). The aseptic workstation should be protected from sources of microbial contamination and should be located in an area where personnel traffic is limited. The area around the aseptic workstation should not be used for storage of materials that shed large quantities of particulate matter (e.g., corrugated boxes).

The proper operation of the aseptic workstation must be certified by measurement of airborne particles, HEPA filter integrity testing, pressure differential testing, or other means. The specific tests depend on the type of aseptic workstation. Certification should be performed at the inception of operation and at least annually thereafter or after repair or replacement of the HEPA filter. These requirements supersede those in other USP general information chapters (e.g., *Microbiological Control and Monitoring of Aseptic Processing Environments* ⟨1116⟩).

The work area inside the aseptic workstation should be clean. The internal surfaces should allow easy cleaning and disinfection. The internal surfaces should be cleaned and disinfected with appropriate disinfectants that are sterile filtered or certified sterile with a manufacturer's certification.

MICROBIOLOGICAL TESTING

Microbiological testing of the environment should be performed to assess air quality and surface disinfection of the aseptic areas. This can be achieved by either settling plates or active air-sampling plates. Surface disinfection of critical surfaces (e.g., the work surface of the aseptic workstation or operators' fingers) should be assessed with swab or contact plates. For microbiological testing of the aseptic workstation, the air should be tested as part of the workstation qualification (e.g., every six months) and the surface (using swab or contact plates) should be assessed after use, each day of use. Nonviable particle counts may be determined less frequently following certification of the *Aseptic workstation* (see above).

Alert and action limits should be established for samples obtained during microbiological testing. Typical alert levels are set at less than three colony-forming units (cfu) per plate. More than three cfu require corrective actions that may include operator retraining, recertification of the aseptic workstation, or other actions. The results of microbiological testing also should be used in the investigation of positive sterility tests.

Equipment

Equipment used to make and test PET drug products should be appropriate for its intended purpose and should be installed, cleaned, and maintained in an appropriate manner. Equipment should be capable of producing consistent results.

The following requirements should be described in written procedures, and performance of these procedures should be documented.

1. *Installation of New Equipment*—Newly installed equipment should be qualified before it is used to make or test PET drug products at an appropriate level of detail based on complexity. All qualification activities should be properly documented, including the date and the name of the person who performed the qualification. For more complex equipment, qualification consists of three phases:
    - Installation Qualification (IQ)—IQ is a check of items required for proper installation of the equipment, including physical location, required utilities and supplies, communications, and environmental conditions. IQ should describe the installation procedure for the equipment.
    - Operational Qualification (OQ)—OQ is a check of operational specifications for the equipment, including equipment set-up, functional testing of subsystems, and proper overall operation. OQ should describe operational procedures for the equipment.
    - Performance Qualification (PQ)—PQ demonstrates that the equipment is capable of performing tasks required to make and test PET drug products in the operating environment and that the equipment provides the intended results. PQ should describe the required performance tasks for the equipment.
2. *Calibration of Equipment*—Analytical equipment calibration should be performed before use, as appropriate. A schedule should be developed for recalibration and should have a sufficient frequency to ensure accurate results. Calibration activities should be properly documented, including the date and the name of the person who performed the calibration.
3. *Preventive Maintenance of Equipment*—A preventive maintenance schedule should be developed for major production and testing equipment, including automated chemistry modules, gas chromatographs, high-performance liquid chromatographs, and others. The schedule should have a sufficient frequency to minimize equipment downtime. Major repairs may require recalibration and requalification. Preventative maintenance activities should be properly documented, including the date of such performance and the name of the person who performed them.

Cleaning Equipment and Components

Equipment used in production or compounding of PET drug products includes automated, computer-controlled devices, as well as manually operated apparatus. Before it is used in making PET drug products, equipment should be properly cleaned to ensure that the resulting PET drug product meets established specifications for identity, strength, quality, and purity (see *Controls and Acceptance Criteria for Finished PET Drug Products* below). Once cleaned, equipment should be maintained in a state of cleanliness before use.

Equipment may be used to make multiple batches of one or more PET drug products. Documented studies should demonstrate the effectiveness of the cleaning process between batches. All impurities should be controlled at levels that conform to established specifications for identity, strength, quality, and purity. Written procedures for line clearance between batches of different PET drug products should describe routine execution of cleaning processes.

Day-of-Use Checks

Day-of-use checks are necessary for processing equipment to ensure proper function. Written procedures for the day-of-use checks should be established and followed. These procedures should be designed to check key parameters at the beginning of each operational cycle (e.g., temperature, pressure integrity, gas supply, vacuum supply, proper delivery line selection, reagent delivery volumes, gas flow rates, radiation monitors, and other process sensors). Some parameters may be periodically checked as part of the calibration and preventive maintenance schedules as described above.

System Suitability for QC Equipment

System suitability tests are necessary for QC equipment to ensure that the equipment, components, and personnel (i.e., the system) function as a whole to execute the desired analytical method. System suitability tests should be performed prior to using the equipment according to established procedures. Written procedures should be established and followed for system suitability tests, and the test results should be documented.

The system suitability tests required for chromatographic methods include tailing factor, replicate injections, and resolution. When the test chromatogram used for system suitability contains only a single peak, then tailing factor, replicate injections, and column efficiency (theoretical plates) are adequate. The use of internal or external standards with a known concentration is necessary for these determinations. Standards should be prepared from well-characterized materials or from materials that have a manufacturer's certification. Two acceptable approaches that may be used for chromatographic methods are the following:

1. Create a calibration curve from a range of standards with known concentrations. The concentrations of the standards should bracket the conditions of use for the chromatographic method. The calibration curve should be used over a suitably specified period of time (e.g., six months), after which time a new one should be created. A new calibration curve should be created each time an alteration is made to the chromatographic system. Routine system suitability for replicate injections consists of a single injection of a known standard and a measurement of the concentration based on the calibration curve. If the measured concentration agrees with the known concentration within a predefined range (e.g., 10% for manual injections and 5% for automated injections), this demonstrates the suitability of the system for replicate injections and ensures that the calibration curve is appropriate for use in subsequent sample injections. The tailing factor and resolution (or column efficiency, as appropriate) should be determined from the same chromatogram.
2. At the beginning of each testing cycle, create a single-point calibration from two injections of a known standard. The measured area of the peaks for these injections should agree within a predefined range (e.g., 10% for manual injections and 5% for automated injections). Then the results are averaged and used with the standard concentration to provide a calibration factor that is used in subsequent sample injections for that day. The tailing factor and resolution (or column efficiency as appropriate) should be determined from one of the two chromatograms.

Other chromatographic parameters such as signal-to-noise ratio, limit of detection, and limit of quantitation can be determined as part of routine system suitability testing.

System suitability tests also may be appropriate for other QC equipment, including dose calibrators, scanners for radio–thin layer chromatography (radio–TLC), and multichannel analyzers. When used, these tests should be performed at installation, relocation, and appropriate intervals thereafter. These tests should use known standards to demonstrate the proper function of the equipment, for example:

1. *Dose Calibrator*—Accuracy, geometry, and linearity should be assessed at installation and at appropriate intervals thereafter. The instrument should be calibrated in accordance with nationally recognized standards or the manufacturer's instructions. Routine system suitability testing should include a constancy check with a suitable high-energy radionuclide source.
2. *Radio–TLC Scanner*—Uniformity, positional accuracy, detector linearity, and resolution should be assessed with a suitable radionuclide source. Routine system suitability testing should include checks for these parameters.
3. *Multichannel Analyzer*—Sensitivity and resolution should be assessed at installation and at appropriate intervals thereafter. Routine system suitability testing should include a constancy check with a suitable high-energy radionuclide source.

CONTROL OF COMPONENTS, MATERIALS, AND SUPPLIES

Components, materials, and supplies that are used in the preparation of PET drug products should be controlled to avoid contamination, mix-ups, and errors. A designated person should be responsible for ensuring that these activities are carried out and completed properly. Records of completed examinations and tests for components, materials, and supplies should be maintained for one year after their expiration or for one year after batch release, whichever is longer. The following activities should be established and performed:

1. Establish written specifications for the identity, strength, quality, and purity of ingredients, reagents, target materials, and gases.
2. Establish written specifications for the identity and quality of sterile empty vials, transfer lines, sterile stopcocks, sterile needles, sterile membrane filters, and other components used in the PET drug product vial assembly.
3. Establish written specifications for the identity, strength, quality, and purity of analytical supplies (e.g., solvents, chromatography columns, and authentic standards), sterility test media, and endotoxin test reagents used in the testing of PET drug products.
4. Establish appropriate storage conditions (based on heat, light, humidity, and other factors) for components, materials, and supplies used to make and test PET drug products.
5. Store components, materials, and supplies in a controlled-access area according to established storage conditions. Segregate components, materials, and supplies as appropriate to avoid mix-ups and errors.
6. Log each lot of shipment of components, materials, and supplies, and record the date of receipt, quantity received, manufacturer, manufacturer's lot number, and expiration date. If no expiration date is designated by the manufacturer, assign one based on knowledge of its physical and chemical properties and previous experience with its use. For organic substrates and reagents that are potentially susceptible to degradation or to a change in composition, the expiration date should be based on the material's stability.
7. Determine that each lot of components, materials, and supplies complies with established written specifications. Compliance with specifications can be demonstrated by inspection of the labeling or inspection of the manufacturer's certification. The identity of each lot of components, materials, and supplies should be verified by defined procedures, tests, or documented manufacturer's certification, as appropriate. Perform an identity test for precursors (e.g., melting point determination or other appropriate tests). Alternatively, the manufacturer's certification can be used as the only acceptance criterion for a precursor if final testing of the PET drug product ensures that the correct precursor has been used. Reference standards used in chromatographic procedures should have suitable documentation of identity and purity. Other components can be accepted on the basis of a manufacturer's certification only.
8. Membrane filters used with parenteral PET drug products should have a manufacturer's certification. Examine the manufacturer's certification for each lot to ensure compliance with written specifications.
9. Media used in the sterility testing of PET drug products may be obtained from commercial sources. If the media is obtained from commercial sources, then growth-promotion testing that uses a suitable single species of organism should be performed on initial qualification of the supplier and periodically (e.g., quarterly) thereafter.

PROCESS AND OPERATIONAL CONTROLS

Process Controls

The following process controls should be established and summarized in a master formula for the PET drug product. A designated person should be responsible for ensuring that these activities are carried out and completed properly.

1. Written acceptance criteria for the identity, strength, quality, and purity of each PET drug product should be established. For PET drug products intended for parenteral administration, specifications should include sterility and bacterial endotoxins. If a *USP* monograph exists or if there are specifications that have been previously accepted by the appropriate regulatory agency (e.g., FDA), then these standards, if applicable, may be applied as the minimum acceptance criteria.
2. Written procedures for the preparation of each PET drug product should provide the following:
   - Incorporate, for each PET drug product intended for parenteral administration, sterile membrane filtration (0.22 µm) or steam sterilization;
   - Incorporate, for each PET drug product intended for inhalation, particulate filtration (0.45 µm);
   - Describe routine cleaning procedures for equipment and facilities;
   - Describe components, materials, and supplies used to make PET drug products, including precursors, standards, reagents, stock solutions, and related items;
   - Describe the process and the steps used to make the PET drug product;
   - Describe the formulation process, including the use of stabilizers, buffers, and other agents;
   - Describe calculations performed for quantitative parameters associated with making and QC testing the PET drug product (e.g., including radiochemical yield, radiochemical purity, specific activity, solvent amounts, etc.);
   - Describe QC tests for the final PET drug product (see *Controls and Acceptance Criteria for Finished PET Drug Products* below), including a schedule that defines whether or not each test should be performed on each batch and that states if the test results should be complete at the time of release.

3. The quality of each batch of a PET drug product should be verified by full finished product testing prior to use to ensure the product meets all specifications.
4. In cases where testing as described in the previous paragraph is not possible or impractical, the quality of a PET drug product may also be ensured by documented validation studies in lieu of prerelease tests. Such studies should provide the following:
   - Demonstrate a consistent process that is suitable for the intended preparation of the PET drug product;
   - Be completed on three batches made according to the master formula, and all three batches should meet all acceptance criteria;
   - Include evaluation of radiochemical identity and purity, radionuclidic identity and purity, specific activity, sterility (for parenteral PET drug products), bacterial endotoxins (for parenteral PET drug products), pH, appearance, stereochemical purity (for applicable compounds), residual solvents, other toxic chemicals that may have been used during the synthesis or purification procedure, effective concentration of a stabilizer (if any), chemical purity of the PET drug product, and equivalence of initial and final sub-batches (see *Definitions* above);
   - Be repeated if the process and steps described in the master formula have been altered in a way that could change the identity, strength, quality, or purity of the PET drug product;
5. The processes and steps described in the master formula should be updated as needed and should be reviewed annually to ensure they are current. Prior to the implementation of updates, appropriate validation and/or verification should be approved and performed.

Appropriate controls of computer-controlled equipment should ensure that process changes are instituted only by authorized personnel and that such changes are documented and verified. Production, compounding, and test methods should be backed up and controlled to avoid accidental use of outdated methods. In the case of processes or test methods from a vendor that are used without alteration, it is acceptable to rely on vendor certification for software verification and proper operation.

Operational Controls

The following operational controls should be established and summarized in a batch record that is a subset of the master formula for the PET drug product. The batch record should adequately document the routine process for making the PET drug product. A designated person should be responsible for ensuring that these activities are carried out and completed properly. Completed batch records and associated documentation should be maintained for one year after batch release.

1. Execute suitable line clearance procedures to avoid mix-ups and cross-contamination, including the inspection of areas used to make and test PET drug products, and the inspection of all equipment for cleanliness and suitability before use. Remove extraneous materials and labels from these areas and equipment.
2. Ensure the correct identity, strength, quality, and purity of components, materials, and supplies used in the preparation of the PET drug product. Label components as appropriate for identity and traceability purposes.
3. Execute routine cleaning procedures for equipment and facilities.
4. Prepare the PET drug product according to the current master formula, and for each batch maintain a batch record. Batch records may consist of paper documents, electronic records, or combinations thereof. Spreadsheets and other electronic recordkeeping tools should be verified to ensure traceability, data integrity, accuracy of results for calculations, and so on. The batch record should include the following:
   - Lot numbers or other unique identifiers for all components, materials, and supplies used to make the PET drug product;
   - A description of the individual procedures that were followed;
   - The initials, signature, or other identifier of the responsible individual indicating that critical steps and processes used to make and test the PET drug product were completed;
   - The percent yield calculated on the basis of the known or expected amount of the starting radionuclide that is synthetically incorporated into the PET drug product;
   - Raw analytical data on each batch of the PET drug product;
   - Labeling for the PET drug product (see *Labeling* below);
   - Calculations for key parameters defined in the master formula;
   - Results obtained from QC tests of the PET drug product, including chromatograms, print-outs, and other test data;
   - The initials of the analyst who performed each QC test;
   - A notation of the result for each QC test and whether or not the result meets the acceptance criteria;
   - The date and time of release and the signature of the individual who assumes overall responsibility for, and adherence to, the procedures used to make the batch and authorizes the release of the batch for human administration; and
   - Documentation on the batch record of process deviations, when applicable.

Entries in batch records should be made immediately after the activity is performed and should include the initials, signature, or other identifier for the person making the entry. Corrections to paper entries should be dated and initialed, signed, or noted with an identifier of the person making the corrections but leaving the original entry still readable.

Aseptic Operations for Parenteral PET Drug Products

Because the sterility test results for parenteral PET drug products are obtained after release for human administration, aseptic operations and procedures should adequately ensure a sterile PET drug product. All aseptically prepared PET drug products for parenteral administration should be filtered through a sterile membrane filter of 0.22-µm or finer pore size into a closed sterile vial or container or sterilized by steam sterilization. Although the chemical synthesis of a parenteral PET drug product may take place in an open or closed apparatus, the membrane filtration of the PET drug product should be a closed system downstream of the membrane filter. This system should be aseptically assembled from presterilized, commercially available components.

COMPONENTS

The sterile components used in the aseptically assembled apparatus typically consist of an empty vial, needles, membrane filters, vent needles, syringes, tubing, stopcocks, and perhaps others. All components should be single-use, commercially available, presterilized items. If components in the aseptically assembled apparatus are sterilized by the PET facility, the sterilization processes should be verified. The exact configuration of the PET drug product vial assembly is process dependent. A typical example is a sterile, empty vial with a membrane filter of 0.22-µm pore size attached to a needle that is inserted through the vial septum for filtration, a membrane filter of 0.22-µm pore size attached to a needle that is inserted through the vial septum for venting the vial during filtration, and a syringe with needle inserted through the vial septum for removal of the QC sample after filtration is complete.

PET DRUG PRODUCT VIAL ASSEMBLY

Aseptic techniques should be used in the preparation of the PET drug product vial assembly, especially the assembly of all components downstream from the membrane sterilizing filter. These operations should be performed in an ISO Class 5 environment (see *Facilities and Equipment* above).

Following the creation of the PET drug product vial assembly in the ISO Class 5 environment, the assembly can be removed to another location for filtration. The location can be a noncontrolled environment as long as the integrity of the PET drug product vial assembly is not compromised during the process. Any PET drug product vial assembly that is compromised during this process should be discarded.

ASEPTIC TECHNIQUES

Any sterile component downstream from the membrane filter that contacts the PET drug product should be handled using suitable aseptic techniques inside the aseptic workstation. During aseptic operations, operators should wear proper attire, including a clean laboratory jacket, forearm sleeves, hair cover, sanitized gloves that cover the wrist, and beard/moustache covers (as appropriate). Multiple PET drug product vial assemblies can be prepared in a single aseptic operational cycle. The storage conditions and time for assembled vials should be based on data from aseptic simulations.

STERILITY TEST INOCULATIONS

Sterility tests should be performed to assess the quality of PET drug products intended for parenteral administration. The inoculation of sterility test media should be performed in a manner that is consistent with personnel radiation exposure requirements but that also minimizes the risk of false positives caused by adventitious contamination during the inoculation process. For media tubes with a screw-cap opening, the inoculation should be performed in the aseptic workstation. Media tubes with a septum cap can be inoculated in a shielded area that does not contain a HEPA filter.

STABILITY

Written specifications for the expiration time and storage conditions should be established for each PET drug product. The expiration time should be based on the results of stability testing (and specific activity requirements, as appropriate). Stability testing of the PET drug product should be performed at the highest strength of the PET drug product and in the intended final vial or container. At least three batches of the PET drug product should be stored according to proposed conditions and should be examined after a time period equal to the proposed shelf life. In addition, the PET drug product should meet acceptance criteria for radiochemical purity, appearance (color and clarity), pH, and stabilizer effectiveness (as appropriate) and chemical purity at expiry. Analytical methods should be reliable, meaningful, and specific. Stability studies should be repeated if there is a change in strength, stabilizer (or preservative) content that has the potential to affect the stability, the final vial or container, storage conditions, or expiration time. The results of stability testing should be documented.

CONTROLS AND ACCEPTANCE CRITERIA FOR FINISHED PET DRUG PRODUCTS

Written specifications for identity, strength, quality, and purity should be established for each PET drug product. For PET drug products intended for parenteral administration, specifications should be included for sterility and bacterial endotoxins.

Written procedures should be developed for QC tests. QC and documentation requirements should be established for each batch or sub-batch of a PET drug product (see *Process and Operational Controls* above). All QC tests should be executed by qualified and trained personnel according to written procedures.

The short half-life of PET radionuclides frequently precludes the completion of all QC tests before shipment of the PET drug product. This effectively creates two levels of release, one for distribution and the other for human administration. This is acceptable as long as the QC tests required for release of the PET drug product for human administration (see below) are completed before administration. The controls used in the release for distribution should be previously established in writing and should be documented in routine practice. It is not necessary to retain reserve samples of PET drug products.

If a *USP* compendial test procedure is used, the procedure should be verified to demonstrate that the test works under the conditions of actual use. Noncompendial test procedures used in the testing of a PET drug product should be reliable and specific. Supporting data for use of all analytical methods should be documented. Data derived from process studies or from in-process controls can be used as a basis for the omission of some QC tests. An example of this approach is the chlorodeoxyglucose determination in the testing of [^{18}F]fludeoxyglucose. Supporting data from process studies or in-process controls should be documented.

Quality Control Tests

The following QC tests should be performed on each batch before release for administration:

1. Appearance by visual inspection for color and clarity (absence of particulate matter) for parenteral dosage forms.
2. Measurement of the pH for parenteral dosage forms.
3. Determination of the radiochemical purity and identity of all dosage forms.
4. Determination of the radionuclidic identity of all dosage forms by half-life measurement.
5. Determination of the strength.
6. Determination of the specific activity of PET drug products that have mass-dependent localization or toxicity concerns.
7. Determination of residual solvents used in the synthesis or purification processes.
8. Determination of the chemical purity and residual compounds used in the synthesis or purification processes (e.g., cryptand [2.2.2]).
9. Determination of preservative or stabilizer, if present.

For PET drug products with very short-lived radionuclides, prepare an initial QC sub-batch that is representative of successive sub-batches prepared in a defined operational cycle. The QC tests described in the previous paragraph should be considered for the QC sub-batch before release of subsequent sub-batches for human administration. For subsequent sub-batches of parenteral and inhaled dosage forms, visual inspection should be performed before human administration. In certain cases, limited testing of each sub-batch before administration may be appropriate (e.g., for pH determination of [^{13}N]ammonia produced by Devarda's alloy).

Periodic Quality Indicating Tests

For all PET drug products, periodically measure the radionuclidic purity of decayed samples of the PET drug product to assess the presence of long-lived radionuclides that are produced in targetry associated with the particle accelerator. For PET drug products labeled with certain radionuclides (e.g., ^{94m}Tc, ^{124}I, ^{64}Cu, ^{76}Br, and others), consider the measurement of radionuclidic purity by gamma spectrometry. Periodic quality indicating tests for PET drug products also include low-level nontoxic impurities (e.g., Class 3 residual solvents). The periodic testing should be performed at predetermined intervals rather than on a batch-to-batch basis.

Microbiological Tests for Sterile PET Drug Products

For PET drug products intended for parenteral administration, perform the following QC tests in addition to those described previously:

1. Determine the integrity of the membrane filter. Filter units used to sterilize PET drug products should be subjected to manufacturers' recommended integrity tests such as the bubble point test. Perform the filter integrity test after completion of filtration and before release of the PET drug product for human administration. In the case of PET drug products with $T_{1/2} < 10$ min, the PET drug product can be released for human administration before completion of the filter integrity test. In this case, the test should be completed as soon as possible after release.
2. Perform a test for bacterial endotoxins on each batch or QC sub-batch of a PET drug product. The test can be performed using recognized procedures in *USP* (see *Bacterial Endotoxins Test* ⟨85⟩). Regardless of which test is used, it should be initiated before release of each batch for human administration. For PET drug products with very short-lived radionuclides,

complete the test on the QC sub-batch before the release of subsequent sub-batches for human administration. After a record of successful bacterial endotoxin tests is established for a particular PET drug product, it is necessary only to test the first batch prepared each day for that PET drug product.

3. Perform a test for sterility on each batch or QC sub-batch. The sterility test consists of the inoculation and incubation of a sample into each of two media: tryptic soy broth and fluid thioglycollate. The inoculated volume may be adjusted to avoid excessive losses because of sterility testing (e.g., 0.1 mL inoculated into 10 mL of media). The incubation period for sterility tests should begin within 30 hours of the membrane filtration. The samples can be inoculated immediately after completion of the membrane filtration, or they can be allowed to decay in a shielded area for as long as 30 hours before inoculation. It is acceptable to exceed the 30-hour period because of weekends or holidays provided it is shown that the extended period does not significantly reduce the viability of a suitable indicator organism in the sample. The sterility test may be performed using other recognized procedures in *USP* (see *Sterility Tests* ⟨71⟩). Samples should be tested individually and may not be pooled. After a record of successful sterility tests is established for a particular PET drug product, it is only necessary to test the first batch prepared each day for that PET drug product.

Conditional Final Release Tests

When a required QC test for a PET drug product cannot be completed because of a malfunction of testing equipment, it may be appropriate to conditionally release the batch. PET drug products may not be released without determination of radiochemical identity and purity. The batch may be released if the following conditions are met:

1. Review historical QC data to assess the frequency of out-of-specification (OOS) results or failures associated with the QC test. A conditional release is appropriate only if the historical data reveal a record of successful completion of the QC test.
2. Confirm that the acceptance criteria are met for all other QC tests for the batch.
3. Retain a sample of the conditionally released batch.
4. Promptly correct the malfunction of the testing equipment.
5. Complete the omitted QC test on the sample as soon as possible after the malfunction has been corrected. This is not necessary if the omitted QC result is meaningless after decay of the PET drug product.
6. If the sample fails the omitted QC test, immediately notify the physician or receiving facility that ordered the PET drug product.
7. Document all actions regarding the conditional release of the PET drug product, including the justification for the release, results of completed testing, and any notifications and corrective and preventive actions resulting from the incident.

In addition to the finished QC testing, other appropriate laboratory determinations could involve in-process testing of an attribute that is equivalent to finished-product testing of that attribute; continuous statistical process monitoring; or some combination of these approaches with finished testing of each PET drug product.

IF A PET DRUG PRODUCT DOES NOT CONFORM TO SPECIFICATIONS

When the result of a QC test for a PET drug product does not meet established acceptance criteria, the result is OOS. An OOS result does not necessarily mean that the final PET drug product is a failure and should be rejected. Instead, an OOS investigation should be performed to determine if the OOS result indicates a true failure or an analytical error.

If an OOS investigation concludes that the OOS result was caused by an analytical error, invalidate the original test. If a printout is associated with this test, mark the printout *invalid*, retain it for the batch record, and repeat the test.

If an OOS investigation concludes that the OOS result was a true failure, the batch should be rejected and cannot be released for human administration. Segregate the batch to avoid its potential use. Investigate all failures and document the results according to written procedures. The investigation should include, but is not limited to, the examination of processes, operations, and records from previous batches, as well as complaints and other relevant sources of information. If possible, assign an actual or probable cause to the failure, and document corrective actions undertaken as a result of the investigation. Depending on the nature of the failure, the PET drug product may be reprocessed according to pre-established written procedures (see *Reprocessing* below).

When a sterility test for a PET drug product shows signs of microbial growth, the test result is OOS and should be investigated. Upon completion of the investigation, immediately notify all receiving facilities if the product fails to meet the criterion for sterility, including the microbiological findings from the investigation.

REPROCESSING

If a PET drug product is rejected as a true failure, the batch may be reprocessed according to established procedures. It is not possible to describe all possible reprocessing operations, but some examples could include the following:

- pH adjustment;
- A second passage through a membrane filter in the event of a failed filter integrity test; and
- A second passage through a purification column to remove an impurity.

If a PET drug product is reprocessed, the reprocessed batch should be tested to ensure it meets the established acceptance criteria for the PET drug product before release for human administration.

LABELING

The following information should appear on the label attached to the final PET drug container:
- The name of the PET drug product, including the dosage form;
- The assigned batch number; and
- Any required warning statements or symbols (e.g., investigational use, radioactive).

The following information should appear on the shielding for the PET drug product:
- The name of the PET drug product, including the dosage form;
- The assigned batch number;
- The date and time of calibration;
- Any required warning statements or symbols (e.g., investigational use, radioactive);
- As appropriate, the total radioactivity in MBq (or mCi) or the strength in MBq/mL (or mCi/mL) at time of calibration;
- Expiration time and date;
- Added substance(s) (e.g., stabilizer inactive ingredients);
- The name of the producer where the PET drug product was made or the name of the distributor;
- Other applicable warning statement(s) (e.g., "Do not use if cloudy or if it contains particulate matter" or investigational use labeling); and
- Other pertinent information (if required), such as storage condition(s), half-life.

GLOSSARY

Batch: A quantity of PET drug product that is intended to have uniform character and quality, within specified limits, and that is made in a single operational cycle produced according to one or more production order(s).

Conditional final release: A final release for patient administration before completion of required tests because of a malfunction of analytical equipment.

Lot: A quantity of materials (e.g., reagents, solvents, gases, purification columns, and other auxiliary materials) that have uniform character and quality within specified limits and are used to make a PET drug product.

PET drug: A radioactive substance (active pharmaceutical ingredient) that exhibits spontaneous disintegration of unstable nuclei by the emission of positrons and is incorporated into a PET drug product to furnish direct effect in the diagnosis or monitoring of a disease or a manifestation of a disease in humans, or monitoring treatment of disease or therapeutic procedures (e.g., tumor therapy).

PET drug product: A finished dosage form that contains a PET drug, whether or not in association with one or more other ingredients.

Compounding: The practice as described in the Food, Drug and Cosmetic Act (1997) Chapter II, Section 121 (a) (ii) (1) (B) of synthesizing or formulating a PET drug product, by or on the order of a practitioner who is licensed by a State to compound or order compounding for a PET drug product, and is compounded in accordance with that State's law, for a patient or for research, teaching, or quality control.

Line clearance: The segregation and cleaning of different processing and work areas to avoid cross-contamination and mix-ups between the production and/or compounding of different PET drug products.

Manufacturer's certification: Documentation, including, but not limited to, certificates of analysis, certificates of conformance, or certificates of quality obtained from the manufacturer, supplier, or vendor of a material or component that describes critical quality characteristics used to determine acceptability of use.

Out of specification (OOS): A quality control test result for a PET drug product that does not conform to established acceptance criteria.

Production: The process of synthesis or formulation of a PET drug product including processing, packaging, labeling, reprocessing, and testing for investigational or research use.

Quality assurance (QA): A planned system for ensuring that a PET drug product possesses defined identity, strength, quality, and purity required for its intended purpose by procedures, tests, and analytical methods.

Quality control (QC): A system for testing the quality of components, materials, supplies, and PET drug products by procedures, tests, analytical methods, and acceptance criteria.

Specific Activity: The radioactivity of a radionuclide per unit mass of the element or compound. The unit of specific activity is radioactivity per mass expressed on a gram or mole basis (e.g., mCi/μg [MBq/μg], Ci/mmol [GBq/mmol]).

Strength: The radioactivity concentration of the PET drug in the PET drug product on a volume basis at the time of calibration. The unit of strength is the amount of radioactivity per volume at the time of calibration (e.g., mCi/mL [MBq/mL]).

Sub-batch: A quantity of PET drug product having uniform character and quality, within specified limits, that is produced during one succession of multiple irradiations using a given synthesis or purification operation. A group of sub-batches collectively form a batch that is intended to have uniform character and quality, within specified limits. Sub-batches may be required

for PET drug products with very short-lived radionuclides (e.g., ^{13}N and ^{15}O) because QC tests cannot be completed before use.

Validation: Establishment of documented evidence that a method, process, or system meets its intended requirements.

Verification: Confirmation that an established method, process, or system meets predetermined acceptance criteria.

⟨831⟩ REFRACTIVE INDEX

The refractive index (*n*) of a substance is the ratio of the velocity of light in air to the velocity of light in the substance. It is valuable in the identification of substances and the detection of impurities.

Although the standard temperature for Pharmacopeial measurements is 25°, many of the refractive index specifications in the individual monographs call for determining this value at 20°. The temperature should be carefully adjusted and maintained, since the refractive index varies significantly with temperature.

The values for refractive index given in this Pharmacopeia are for the D line of sodium (doublet at 589.0 nm and 589.6 nm). Most instruments available are designed for use with white light but are calibrated to give the refractive index in terms of the D line of sodium light.

The Abbé refractometer measures the range of refractive index for those Pharmacopeial materials for which such values are given. Other refractometers of equal or greater accuracy may be employed.

To achieve the theoretical accuracy of ±0.0001, it is necessary to calibrate the instrument against a standard provided by the manufacturer and to check frequently the temperature control and cleanliness of the instrument by determining the refractive index of distilled water, which is 1.3330 at 20° and 1.3325 at 25°.

⟨841⟩ SPECIFIC GRAVITY

Unless otherwise stated in the individual monograph, the specific gravity determination is applicable only to liquids, and unless otherwise stated, is based on the ratio of the weight of a liquid in air at 25° to that of an equal volume of water at the same temperature. Where a temperature is specified in the individual monograph, the specific gravity is the ratio of the weight of the liquid in air at the specified temperature to that of an equal volume of water at the same temperature. When the substance is a solid at 25°, determine the specific gravity of the melted material at the temperature directed in the individual monograph, and refer to water at 25°.

Unless otherwise stated in the individual monograph, the density is defined as the mass of a unit volume of the substance at 25°, expressed in kilograms per cubic meter or grams per cubic centimeter ($1\ kg/m^3 = 10^{-3}\ g/cm^3$). Where the density is known, mass can be converted to volume, or volume converted to mass, by the formula: volume = mass/density.

Unless otherwise directed in the individual monograph, use *Method I*.

METHOD I

Procedure

Select a scrupulously clean, dry pycnometer that previously has been calibrated by determining its weight and the weight of recently boiled water contained in it at 25°. Adjust the temperature of the liquid to about 20°, and fill the pycnometer with it. Adjust the temperature of the filled pycnometer to 25°, remove any excess liquid, and weigh. When the monograph specifies a temperature different from 25°, filled pycnometers must be brought to the temperature of the balance before they are weighed. Subtract the tare weight of the pycnometer from the filled weight.

The specific gravity of the liquid is the quotient obtained by dividing the weight of the liquid contained in the pycnometer by the weight of water contained in it, both determined at 25°, unless otherwise directed in the individual monograph.

METHOD II

The procedure includes the use of the oscillating transducer density meter. The apparatus consists of the following:

- a U-shaped tube, usually of borosilicate glass, which contains the liquid to be examined;
- a magneto-electrical or piezo-electrical excitation system that causes the tube to oscillate as a cantilever oscillator at a characteristic frequency depending on the density of the liquid to be examined;
- a means of measuring the oscillation period (*T*), which may be converted by the apparatus to give a direct reading of density or used to calculate density by using the constants *A* and *B* described below; and

- a means to measure and/or control the temperature of the oscillating transducer containing the liquid to be tested.

The oscillation period is a function of the spring constant (c) and the mass of the system:

$$T^2 = \{(M/c) + [(\rho \times V)/c]\} \times 4\pi^2$$

where ρ is the density of the liquid to be tested, M is the mass of the tube, and V is the volume of the filled tube.

Introduction of two constants $A = c/(4\pi^2 \times V)$ and $B = (M/V)$ leads to the classical equation for the oscillating transducer:

$$\rho = A \times T^2 - B$$

The specific gravity of the liquid is given by the formula:

$$\rho_{(L)}/\rho_{(W)}$$

where $\rho_{(L)}$ and $\rho_{(W)}$ are the densities of the liquid and water, respectively, both determined at 25°, unless otherwise directed in the individual monograph.

Calibration

The constants A and B are determined by operating the instrument with the U-tube filled with two different samples of known density (e.g., degassed water and air). Perform the control measurements daily, using degassed water. The results displayed for the control measurement using degassed water do not deviate from the reference value (ρ_{25} = 0.997043 g/cm³) by more than its specified error. Precision is a function of the repeatability and stability of the oscillator frequency. Density meters are able to achieve measurements with an error on the order of 1×10^{-3} g/cm³ to 1×10^{-5} g/cm³ and a repeatability of 1×10^{-4} g/cm³ to 1×10^{-6} g/cm³. For example, an instrument specified to $\pm1 \times 10^{-4}$ g/cm³ must display 0.9970 ± 0.0001 g/cm³ in order to be suitable for further measurement, otherwise a readjustment is necessary. Calibration with certified reference materials should be carried out regularly.

Procedure

Using the manufacturer's instructions, perform the measurements using the same procedure as for *Calibration*. If necessary, equilibrate the liquid to be examined at 25° before introduction into the tube to avoid the formation of bubbles and to reduce the time required for measurement. Factors affecting accuracy include the following:

- temperature uniformity throughout the tube,
- nonlinearity over a range of density,
- parasitic resonant effects, and
- viscosity, if the oscillating transducer density meters used do not provide automatic compensation of sample viscosity influence.

⟨846⟩ SPECIFIC SURFACE AREA

INTRODUCTION

The specific surface area of a powder is determined by physical adsorption of a gas on the surface of the solid and by calculating the amount of adsorbate gas corresponding to a monomolecular layer on the surface. Physical adsorption results from relatively weak forces (van der Waals forces) between the adsorbate gas molecules and the adsorbent surface of the test powder. The determination is usually carried out at the temperature of liquid nitrogen. The amount of gas adsorbed can be measured by a volumetric or continuous flow procedure.

BRUNAUER, EMMETT AND TELLER (BET) THEORY AND SPECIFIC SURFACE AREA DETERMINATION

Multipoint Measurement

The data are treated according to the Brunauer, Emmett and Teller (BET) adsorption isotherm equation:

$$1/[V_a((P_O/P) - 1)] = [(C - 1)/(V_mC)] \times (P/P_O) + (1/V_mC) \qquad (1)$$

P	=	partial vapor pressure of adsorbate gas in equilibrium with the surface at 77.4 K (b.p. of liquid nitrogen), in Pa,
P_o	=	saturated pressure of adsorbate gas, in Pa,

V_a	=	volume of gas adsorbed at standard temperature and pressure (STP) [273.15 K and atmospheric pressure (1.013×10^5 Pa)], in mL,
V_m	=	volume of gas adsorbed at STP to produce an apparent monolayer on the sample surface, in mL,
C	=	dimensionless constant that is related to the enthalpy of adsorption of the adsorbate gas on the powder sample.

A value of V_a is measured at each of not less than three values of P/P_o.
Then the BET value

$$1/[V_a((P_o/P) - 1)]$$

is plotted against P/P_o, according to equation (1). This plot should yield a straight line usually in the approximate relative pressure range 0.05 to 0.3. The data are considered acceptable if the correlation coefficient, r, of the linear regression is not less than 0.9975; that is, r^2 is not less than 0.995. From the resulting linear plot, the slope, which is equal to $(C - 1)/V_mC$, and the intercept, which is equal to $1/V_mC$, are evaluated by linear regression analysis. From these values, V_m is calculated as 1/(*slope* + *intercept*), while C is calculated as (*slope*/*intercept*) + 1. From the value of V_m so determined, the specific surface area, S, in $m^2 \cdot g^{-1}$, is calculated by the equation:

$$S = (V_m Na)/(m \times 22400) \qquad (2)$$

N	=	Avogadro constant (6.022×10^{23} mol^{-1}),
a	=	effective cross-sectional area of one adsorbate molecule, in square meters (0.162 nm^2 for nitrogen and 0.195 nm^2 for krypton),
m	=	mass of test powder, in g,
22,400	=	volume, in mL, occupied by one mole of the adsorbate gas at STP allowing for minor departures from the ideal.

A minimum of three data points is required. Additional measurements may be carried out especially when nonlinearity is obtained at a P/P_o value close to 0.3. Because nonlinearity is often obtained at a P/P_o value below 0.05, values in this region are not recommended. The test for linearity, the treatment of the data, and the calculation of the specific surface area of the sample are described above.

Single-Point Measurement

Normally, at least three measurements of V_a, each at different values of P/P_o, are required for the determination of specific surface area by the dynamic flow gas adsorption technique *(Method I)* or by volumetric gas adsorption *(Method II)*. However, under certain circumstances described below, it may be acceptable to determine the specific surface area of a powder from a single value of V_a measured at a single value of P/P_o such as 0.300 (corresponding to 0.300 mole of nitrogen or 0.001038 mole fraction of krypton), using the following equation for calculating V_m:

$$V_m = V_a[1 - (P/P_o)] \qquad (3)$$

The specific surface area is then calculated from the value of V_m by equation (2) given above.

The single-point method may be employed directly for a series of powder samples of a given material for which the material constant C is much greater than unity. These circumstances may be verified by comparing values of specific surface area determined by the single-point method with that determined by the multipoint method for the series of powder samples. Close similarity between the single-point values and multipoint values suggests that 1/C approaches zero.

The single-point method may be employed indirectly for a series of very similar powder samples of a given material for which the material constant C is not infinite but may be assumed to be invariant. Under these circumstances, the error associated with the single-point method can be reduced or eliminated by using the multipoint method to evaluate C for one of the samples of the series from the BET plot, from which C is calculated as (1 + *slope*/*intercept*). Then V_m is calculated from the single value of V_a measured at a single value of P/P_o, by the equation:

$$V_m = V_a[(P_o/P) - 1]\,[(1/C) + ((C - 1)/C) \times (P/P_o)] \qquad (4)$$

The specific surface area is calculated from V_m by equation (2) given above.

EXPERIMENTAL TECHNIQUES

This section describes the methods to be used for the sample preparation, the dynamic flow gas adsorption technique *(Method I)* and the volumetric gas adsorption technique *(Method II)*.

Sample Preparation

OUTGASSING

Before the specific surface area of the sample can be determined, it is necessary to remove gases and vapors that may have become physically adsorbed onto the surface after manufacture and during treatment, handling, and storage. If outgassing is not achieved, the specific surface area may be reduced or may be variable because an intermediate area of the surface is covered with molecules of the previously adsorbed gases or vapors. The outgassing conditions are critical for obtaining the required precision and accuracy of specific surface area measurements on pharmaceuticals because of the sensitivity of the surface of the materials.

The outgassing conditions must be demonstrated to yield reproducible BET plots, a constant weight of test powder, and no detectable physical or chemical changes in the test powder.

The outgassing conditions defined by the temperature, pressure, and time are chosen so that the original surface of the solid is reproduced as closely as possible. Outgassing of many substances is often achieved by applying a vacuum by purging the sample in a flowing stream of a nonreactive, dry gas or by applying a desorption-adsorption cycling method. In either case, elevated temperatures are sometimes applied to increase the rate at which the contaminants leave the surface. Caution should be exercised when outgassing powder samples using elevated temperatures to avoid affecting the nature of the surface and the integrity of the sample.

If heating is employed, the recommended temperature and time of outgassing are as low as possible to achieve reproducible measurement of specific surface area in an acceptable time. For outgassing sensitive samples, other outgassing methods such as the desorption-adsorption cycling method may be employed.

ADSORBATE

The standard technique is the adsorption of nitrogen of analytical quality at liquid nitrogen temperature.

For powders of low specific surface area ($< 0.2\ m^2g^{-1}$), the proportion adsorbed is low. In such cases, the use of krypton at the liquid nitrogen temperature is preferred because the low vapor pressure exerted by this gas greatly reduces error. The use of larger sample quantities, where feasible (equivalent to 1 m^2 or greater total surface area using nitrogen), may compensate for the errors in determining low surface areas.

All gases used must be free from moisture.

QUANTITY OF SAMPLE

A quantity of the test powder is accurately weighed such that the total surface of the sample is at least 1 m^2 when the adsorbate is nitrogen and 0.5 m^2 when the adsorbate is krypton.

Lower quantities of sample may be used after appropriate validation.

Measurements

Because the amount of gas adsorbed under a given pressure tends to increase when the temperature is decreased, adsorption measurements are usually made at a low temperature. Measurement is performed at 77.4 K, the boiling point of liquid nitrogen.

Method I: The Dynamic Flow Method

PRINCIPLE

In the dynamic flow method (see *Figure 1*), the recommended adsorbate gas is dry nitrogen or krypton, while helium is employed as a diluent gas, which is not adsorbed under the recommended conditions.

A minimum of three mixtures of the appropriate adsorbate gas with helium are required within the P/P_o range 0.05 to 0.30.

The gas detector-integrator should provide a signal that is approximately proportional to the volume of the gas passing through it under defined conditions of temperature and pressure. For this purpose, a thermal conductivity detector with an electronic integrator is one among various suitable types. A minimum of three data points within the recommended range of 0.05 to 0.30 for P/P_o is determined.

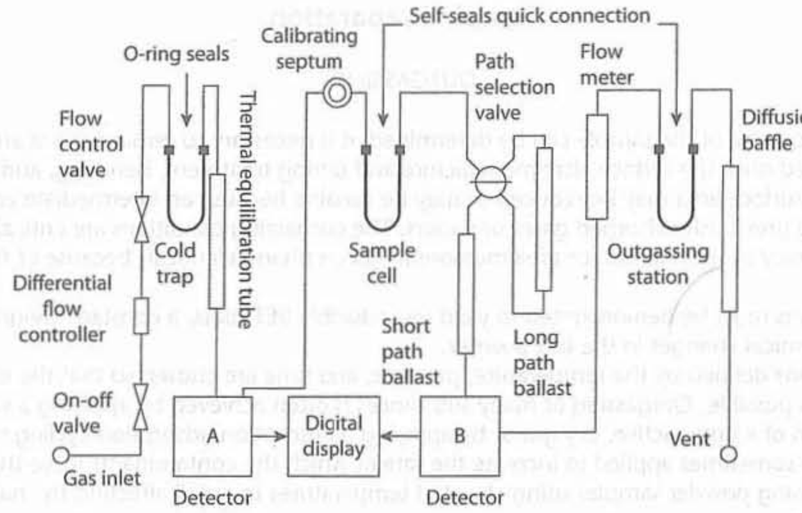

Fig. 1. Schematic diagram of the dynamic flow method apparatus.

PROCEDURE

A known mixture of the gases, usually nitrogen and helium, is passed through a thermal conductivity cell, through the sample again, through the thermal conductivity cell, and then to a recording potentiometer.

The sample cell is immersed in liquid nitrogen, and the sample adsorbs nitrogen from the mobile phase. This unbalances the thermal conductivity cell, and a pulse is generated on a recorder chart.

The sample is removed from the coolant; this gives a desorption peak equal in area and in the opposite direction to the adsorption peak. Because this is better defined than the adsorption peak, it is the one used for the determination.

To effect the calibration, a known quantity of adsorbate, sufficient to give a peak of similar magnitude to the desorption peak, is injected into the system, and the proportion of gas volume per unit peak area is obtained.

A mixture of nitrogen and helium is used for a single-point determination; and several such mixtures or premixing two streams of gas are used for a multipoint determination.

The calculation is the same as the volumetric method.

Method II: The Volumetric Method

PRINCIPLE

In the volumetric method (see *Figure 2*), the recommended adsorbate gas is nitrogen, which is admitted into the evacuated space above the previously outgassed powder sample to give a defined equilibrium pressure, P, of the gas. The use of a diluent gas, such as helium, is therefore unnecessary, although helium may be employed for other purposes, such as to measure the dead volume.

Because only pure adsorbate gas, instead of a gas mixture, is employed, interfering effects of thermal diffusion are avoided in this method.

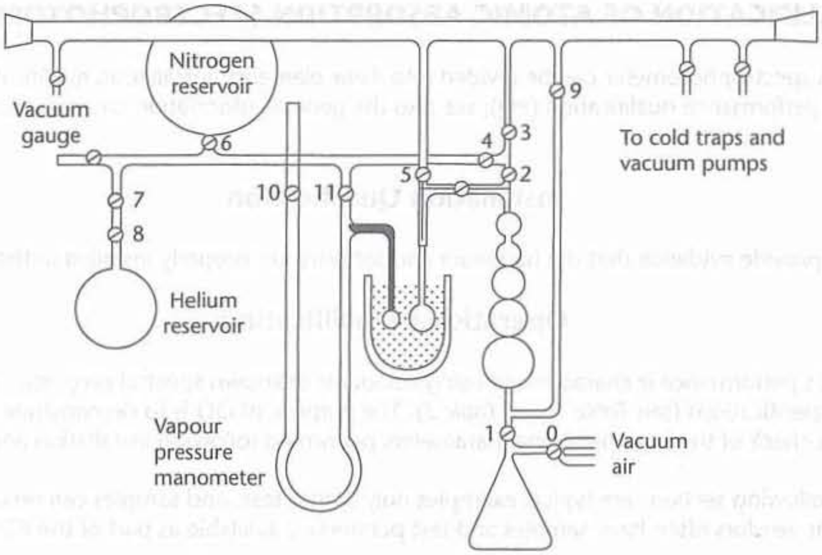

Fig. 2. Schematic diagram of the volumetric method apparatus.

PROCEDURE

A small amount of dry nitrogen is admitted into the sample tube to prevent contamination of the clean surface, the sample tube is removed, a stopper is inserted, the tube is weighed, and the weight of the sample is calculated. Then the sample tube is attached to the volumetric apparatus. The sample is cautiously evacuated down to the specified pressure (e.g., between 2 Pa and 10 Pa). Alternately, some instruments are operated by evacuating to a defined rate of pressure change (e.g., less than 13 Pa/30 s) and by holding for a defined period of time before commencing the next step.

If the principle of operation of the instrument requires the determination of the dead volume in the sample tube, for example, by the admission of a nonadsorbed gas, such as helium, this procedure is carried out at this point, followed by evacuation of the sample. The determination of dead volume may be avoided using difference measurements: that is, by means of reference and sample tubes connected by a differential transducer. The adsorption of nitrogen gas is then measured as described below.

Raise a Dewar vessel containing liquid nitrogen at 77.4 K up to a defined point on the sample cell. Admit a sufficient volume of adsorbate gas to give the lowest desired relative pressure. Measure the volume adsorbed, V_a. For multipoint measurements, repeat the measurement of V_a at successively higher P/P_o values. When nitrogen is used as the adsorbate gas, P/P_o values of 0.10, 0.20, and 0.30 are often suitable.

Reference Materials

Periodically verify the functioning of the apparatus using appropriate reference materials of known surface area that have a specific surface area similar to that of the sample to be examined.

⟨852⟩ ATOMIC ABSORPTION SPECTROSCOPY

INTRODUCTION

Atomic absorption (AA) spectroscopy is an analytical method that supports qualification and/or quantification of elements. In this use, the AA method supports procedures that measure the absorbance of radiation at a characteristic wavelength by a vapor composed of ground state atoms. A typical instrument consists of a primary energy source that produces the spectrum of the element under examination, a monochromator, and a suitable detector.

For discussion of the theory and principles of measurements, see *Atomic Absorption Spectroscopy—Theory and Practice* ⟨1852⟩, a resource that may be helpful but is not mandatory.

General Chapters

QUALIFICATION OF ATOMIC ABSORPTION SPECTROPHOTOMETERS

Qualification of an AA spectrophotometer can be divided into three elements: installation qualification (IQ), operational qualification (OQ), and performance qualification (PQ); see also the general information chapter *Analytical Instrument Qualification* ⟨1058⟩.

Installation Qualification

The IQ requirements provide evidence that the hardware and software are properly installed in the desired location.

Operational Qualification

In OQ, an instrument's performance is characterized using standards of known spectral properties to verify that the system operates within target specifications (see *Table 1* and *Table 2*). The purpose of OQ is to demonstrate that instrument performance is suitable. OQ is a check of the key operational parameters performed following installation and following repairs and/or maintenance.

The OQ tests in the following sections are typical examples only. Other tests and samples can be used to establish specifications for OQ. Instrument vendors often have samples and test parameters available as part of the IQ/OQ package.

Table 1. OQ Test and Acceptance Criteria for Flame AAS

Test	Procedure	Acceptance Criteria
Sensitivity	Aspirate a 0.3-µg/mL Zn standard and record the absorbance.	±20% of AU[a] specified by instrument manufacturer
Linearity	Aspirate blank, 0.05-, 0.075-, 0.10-, 0.25-, and 0.50-µg/mL Zn standards. Generate calibration curve and record correlation coefficient (*R*).	Correlation coefficient NLT 0.995
Precision	Assay 5 separate replicates of the 0.10-µg/mL Zn standard versus the standard curve generated for the *Linearity* test. Calculate the %RSD of the 5 results in µg/mL.	%RSD[b] NMT 3%

[a] AU = absorption unit.
[b] %RSD = % relative standard deviation.

Table 2. OQ Test and Acceptance Criteria for Graphite Furnace AAS

Test	Procedure	Acceptance Criteria
Sensitivity	Prepare a Cu standard and measure the characteristic mass as described by the manufacturer.	±20% of Cu characteristic mass as specified by the manufacturer
Linearity	Generate a calibration curve from a blank, 25-, 50-, 75-, and 100-µg/L Cu standards. Inject each standard in triplicate and record the %RSD.	Correlation coefficient NLT 0.995
		%RSD of triplicate injections of each Cu standard NMT 5% (not including the blank)
Precision	Assay 5 separate replicates of the 50-µg/L Cu standard versus the standard curve generated for the *Linearity* test. Inject each replicate in triplicate.	%RSD of 5 replicates NMT 3%
		%RSD of triplicate injections NMT 5%

Performance Qualification

PQ determines that the instrument is capable of meeting the user's requirements for all the parameters that may affect the quality of the measurement.

Depending on typical use, the specifications for PQ may be different from the manufacturer's specifications. For validated methods, specific PQ tests, also known as system suitability tests, can be used in lieu of PQ requirements.

Specific procedures, acceptance criteria, and time intervals for characterizing AA spectrophotometer performance depend on the instrument and intended application. Demonstrating stable instrument performance over extended periods of time provides some assurance that reliable measurements can be taken from test sample spectra using validated AA procedures.

PROCEDURE

Evaluate and select the type of material of construction, pretreatment, and cleaning of analytical labware used in AA analyses. The material must be inert and, depending on the specific application, resistant to caustics, acids, and/or organic solvents. For some analyses, diligence must be exercised to prevent the adsorption of analytes onto the surface of a vessel, particularly in ultra-trace analyses. Contamination of the sample solutions from metal and ions present in the container also can lead to inaccurate results.

For the analysis of a ubiquitous element, it is often necessary to use the purist grade of reagent or solvent available. Check all solutions (diluents, matrix modifier solutions, ionization suppression solutions, reactants, and others) for elemental contamination before they are used in an analysis.

Standard Solution

Prepare as directed in the individual monograph. [Note—Commercially available single- or multi-element standard solutions, traceable to the National Institute of Standards and Technology or to an equivalent national metrology organization, can be used in the preparation of standard solutions.] Standard solutions, especially those used for ultra-trace analyses, may have limited shelf life. Standard solutions should be retained for NMT 24 h unless stability is demonstrated experimentally.

The method of standard additions also can be used. This method involves adding a known concentration of the analyte element to the sample at no fewer than two concentration levels against an unspiked sample preparation. The instrument response is plotted against the concentration of the added analyte element, and a linear regression line is drawn through the data points. The absolute value of the *x*-intercept multiplied by any dilution factor is the concentration of the analyte in the sample.

Sample Solution

Prepare as directed in the individual monograph.

A variety of digestion techniques may be indicated to dissolve the sample. These may include hot-plate and microwave-assisted digestions, including open-vessel and closed-vessel approaches. Note that open-vessel digestion generally is not recommended for the analysis of volatile metals, e.g., selenium and mercury.

Analysis

Follow the procedure as directed in the individual monograph for the instrumental parameters.

The instrument must be standardized for quantification at the time of use. The absorbance of standard solutions that bracket the target concentration is determined against an appropriate blank. The detector response is plotted as a function of the analyte concentration. When an analysis is performed at or near the detection limit, the analyst cannot always use a bracketing standard. This is acceptable for qualitative but not quantitative tests. Regression analysis of the standard plot should be used to evaluate the linearity of detector response, and individual monographs may set criteria for the residual error of the regression line.

To demonstrate the stability of the system's initial standardization, the analyst must reassay a solution used in the initial standard curve as a check standard at appropriate intervals throughout the analysis of the sample set. Unless otherwise indicated in the individual monograph, the reassayed standard should agree with its expected value to within ±3% for an assay or ±20% for an impurity analysis.

Sample concentrations are calculated versus the working curve generated by plotting the detector response versus the concentration of the analyte in the standard solutions.

VALIDATION AND VERIFICATION

Validation

Validation is required when an AA method is intended for use as an alternative to the official procedure for testing an official article.

The objective of an AA procedure validation is to demonstrate that the measurement is suitable for its intended purpose, including quantitative determination of the main component in a drug substance or a drug product (Category I assays), quantitative determination of impurities or limit tests (Category II), and identification tests (Category IV). [Note—For definition of different categories, see *Validation of Compendial Procedures* ⟨1225⟩.] Depending on the category of the test, analytical procedure validation for AA may require the testing of linearity, range, accuracy, specificity, precision, detection limit, quantitation limit, and robustness. These analytical performance characteristics apply to externally standardized methods and to the method of standard additions.

General information chapter ⟨1225⟩ provides definitions and general guidance on analytical procedures validation without indicating specific validation criteria for each characteristic. The intention of the following sections is to provide the user with specific validation criteria that represent the minimum expectations for this technology. For each particular application, tighter criteria may be needed to demonstrate suitability for the intended use.

ACCURACY

For Category I assays or Category II tests, accuracy can be determined by conducting recovery studies with the appropriate matrix spiked with known concentrations of elements. It is also an acceptable practice to compare assay results obtained using the AA procedure under validation to those of an established analytical procedure. In standard addition methods, accuracy assessments are based on the final intercept concentration, not the recovery calculated from the individual standard additions.
Validation criteria: 95.0%–105.0% mean recovery for the drug substance assay and the drug product assay, and 70.0%–150.0% mean recovery for the impurity analysis. These criteria apply throughout the intended range.

Precision

REPEATABILITY

The analytical procedure should be assessed by measuring the concentrations of six independently prepared sample solutions at 100% of the assay test concentration. Alternatively, three replicates of three separate sample solutions at different concentrations can be used. The three concentrations should be close enough that the repeatability is constant across the concentration range. If this is done, the repeatability at the three concentrations is pooled for comparison to the acceptance criteria. If validating a procedure by the method of standard additions, the precision criterion applies to the final experimental result, not the accuracy of the individual standard addition levels.
Validation criteria: The relative standard deviation is NMT 5.0% for the drug substance assay, NMT 5.0% for the drug product assay, and NMT 20% for the impurity analysis.

INTERMEDIATE PRECISION

The effect of random events on the analytical precision of the procedure should be established. Typical variables include performing the analysis on different days, using different instrumentation, or having the method performed by two or more analysts. As a minimum, the analytical procedure should be assessed by performing the repeatability test in any combination of at least two of the conditions previously mentioned (totaling 12 measurements).
Validation criteria: The relative standard deviation is NMT 8.0% for the drug substance assay, NMT 8.0% for the drug product assay, and NMT 25.0% for the impurity analysis.

SPECIFICITY

The procedure must be able to unequivocally assess each analyte element in the presence of components that may be expected to be present, including any matrix components.
Validation criteria: Demonstrated by meeting the accuracy requirement.

QUANTITATION LIMIT

The limit of quantitation (QL) can be estimated by calculating the standard deviation of NLT six replicate measurements of a blank solution, divided by the slope of a standard curve, and multiplying by 10. If validating a procedure using the method of standard additions, the slope of standards applied to a solution of the test material is used. Other suitable approaches can be used (see ⟨1225⟩).

A measurement of a test solution prepared from a representative sample matrix spiked at the estimated QL concentration must be performed to confirm accuracy. If validating a procedure using the method of standard additions, the validation criterion applies to the final experimental result, not the spike recovery of the individual standard addition levels.
Validation criteria: The analytical procedure should be capable of determining the analyte precisely and accurately at a level equivalent to 50% of the specification.

LINEARITY

A response curve between the analyte concentration and absorbance is prepared from NLT five standard solutions at concentrations encompassing the anticipated concentration of the test solution. The standard curve is then evaluated using appropriate statistical methods, such as a least-squares regression.

For experiments that do not yield a linear relationship between analyte concentration and AA response, appropriate statistical methods must be applied to describe the analytical response.
Validation criteria: Correlation coefficient (*R*), NLT 0.995 for Category I assays and NLT 0.99 for Category II quantitative tests.

RANGE

Range is the interval between the upper and lower concentrations (amounts) of analyte in the sample (including these concentrations) for which it has been demonstrated that the analytical procedure has a suitable level of precision, accuracy, and linearity. Range is demonstrated by meeting the linearity, precision, and accuracy requirements.

Validation criteria: For Category I tests, the validation range for 100.0% centered acceptance criteria is 80.0%–120.0%. For noncentered acceptance criteria, the validation range is 10.0% below the lower limit to 10.0% above the upper limit. For content uniformity, the validation range is 70.0%–130.0%. For Category II tests, the validation range covers 50.0%–120.0% of the acceptance criteria.

ROBUSTNESS

The reliability of an analytical measurement is demonstrated by deliberate changes to experimental parameters. For AA this can include but is not limited to sample preparation steps and heating programs, including atomization hold time or atomization temperature. Exercise caution when changing fuel and oxidant gas flows and burner hardware, because this could potentially create a flash-back condition.

Verification

U.S. Current Good Manufacturing Practices regulations [21 CFR 211.194(a)(2)] indicate that users of the analytical procedures, as described in *USP–NF*, are not required to validate these procedures if provided in a monograph. Instead, they must simply verify their suitability under actual conditions of use.

The objective of an AA procedure verification is to demonstrate that the procedure, as prescribed in a specific monograph, can be executed by the user with suitable accuracy, specificity, linearity, and precision using the instruments, analysts, and sample matrices available. According to *Verification of Compendial Procedures* ⟨1226⟩, if the verification of the compendial procedure by following the monograph is not successful, the procedure may not be suitable for use with the article under test. It may be necessary to develop and validate an alternative procedure as allowed in *General Notices 6.30*.

Verification of compendial AA methods should, at a minimum, include the execution of the validation parameters for specificity, linearity, accuracy, precision, and limit of quantitation, when appropriate, as indicated in *Validation*.

⟨853⟩ FLUORESCENCE SPECTROSCOPY

INTRODUCTION

Fluorescence is a two-step process that requires absorption of light at a specific wavelength (excitation) followed by emission of light, usually at a higher wavelength. The emission of light is termed *fluorescence*.

The most common type of fluorescent sample is a submicromolar transparent solution that absorbs light following the Beer–Lambert–Bouguer Law and fluoresces with an intensity that is directly proportional to the concentration, the absorptivity, and the fluorescence quantum yield of the fluorescent species or fluorophore.

Unlike absorption spectroscopy, where deviation from linearity is the exception, fluorescence linearity can be affected by a number of sample-related effects. For additional information, see *Fluorescence Spectroscopy—Theory and Practice* ⟨1853⟩.

Fluorescence methods also are termed *background-free* because little excitation light reaches the detector. This characteristic makes fluorescence detection highly sensitive, down to single-molecule detection in some cases. Fluorescence detection also can be highly specific because a fluorophore emits a characteristic emission pattern. Specificity and sensitivity are two of the more important strengths of fluorescence methods.

QUALIFICATION OF FLUORESCENCE INSTRUMENTS

Analysts ensure the suitability of a specific instrument for a given procedure by using a stepwise evaluation for the desired application from selection to instrument retirement: design qualification (DQ); installation qualification (IQ); an initial performance-to-specification qualification, also known as operational qualification (OQ); and an ongoing performance qualification (PQ). For additional information, see general chapter *Analytical Instrument Qualification* ⟨1058⟩.

DQ and IQ are not further considered in this chapter. The purpose of this section is to provide test methods and acceptance criteria to ensure that the instrument is suitable for its intended use (OQ) and that it will continue to function properly over extended time periods (PQ).

As with any spectrometric device, analysts must qualify a spectrofluorometer for both wavelength (*x*-axis) and relative intensity (*y*-axis or signal axis) accuracy and precision. They also must establish sensitivity. OQ should span the operational ranges required within the laboratory for both intensity and wavelength scales.

Instrument Operational Qualification

The tolerances given in both the instrument OQ and PQ are applicable for general use. Specifications for particular instruments and applications can vary depending on the analytical procedure used and the desired accuracy of the final result. Instrument vendors often have samples and test parameters available as part of the IQ/OQ package.

Wherever possible, analysts should use certified reference materials for purposes of calibration in the steps detailed below in preference to laboratory-prepared solutions. When certified reference materials are obtained from a recognized accredited source, they have independently verified traceable value assignments with associated calculated uncertainties.

Two general types of instrumental measurements are differentiated here: spectral (i.e., those that measure intensity versus wavelength) and fixed (i.e., those that measure intensity at a fixed wavelength and bandwidth).

CONTROL OF WAVELENGTHS

The level of confidence of measured peak positions is defined by wavelength accuracy for spectral measurements. Determination of the accuracy of many wavelengths across the desired wavelength range demonstrates if further calibration beyond a single point is needed. Multipoint calibration involves measuring wavelength biases at multiple wavelengths and correcting for the wavelength dependence of the bias. A single-point calibration often can be applied to the wavelength axis in an instrument's software before data are collected, but a multipoint calibration may require that the correction be applied to spectra after they are collected.

For fixed measurements, the wavelength position and bandwidth must be reproducible. For filter-based wavelength selection, this requires that only the same filter be used when analysts compare data over time. If a different filter must be used (e.g., when data are compared across instruments and laboratories), then the transmission curves of the filters must be compared.

Wavelength precision should be determined over the operational range using at least six replicate measurements. The standard deviation should not exceed ±1 nm.

ATOMIC LINE SPECTRA

This procedure is described as the primary application because the emission lines produced from a discharge lamp are characteristic of the source element, and, as a fundamental physical standard, these wavelengths have been measured with an uncertainty of NMT ± 0.01 nm. In solution spectrofluorometry the wavelength bias required rarely exceeds 1.0 nm. For these reasons, the atomic line standard values are cited without uncertainty. The lamp should be placed at the source position in the spectrofluorometer.

A commonly employed low-pressure mercury lamp has a number of intense lines that cover a large part of the UV and visible range. Manufacturers often use two Xenon lines from the source at 260.5 and 541.9 nm as an internal calibration check, because the accuracy of both the excitation and emission monochromators can be verified and can be used for diagnostic purposes (see *Table 1*).[1]

Table 1. Elemental Line Spectra Wavelengths

Element	Wavelength (nm)
Hg	253.7
Xe	260.5
Hg	296.7
Hg	365.0
Hg	404.7
Hg	435.8
Xe	541.9
Hg	546.1
Hg	577.0
Hg	579.1

[1] The rounded values are taken from ASTM Standard E388-04 (2009).

USE OF RARE EARTH OXIDE SOLUTIONS

This procedure uses a solution of a rare earth oxide prepared by dissolution in acid media. The most frequently used is holmium oxide in perchloric acid in combination with a diffuse reflector located at the sample position. Suitable certified reference materials are available commercially.[2] The wavelength selector not being scanned should be removed; if removal is not practicable, it should be set to zero order (in this position a grating behaves like a mirror reflecting all wavelengths). The diffuse reflector is scanned with and without the rare earth sample in place, and the ratio of the two intensities is calculated to obtain an effective transmittance spectrum. Minima in the intensity ratio correspond to absorption peaks of the sample. For a 4% (w/w) solution of holmium oxide in perchloric acid at 1.0 nm spectral bandwidth and a path length of 1 cm, these minima are in *Table 2*.[3]

Table 2

Wavelength (nm)
241.1
249.9
278.1
287.2
333.5
345.4
361.3
385.6
416.3
451.4
467.8
485.2
536.6
640.5

If the operational range of the spectrophotometer lies outside 240–650 nm, other certified rare earth oxides or other solutions are used.

Didymium (a mixture of neodymium and praseodymium) is available as a traceable standard in both solution and glass presentations. Didymium is similar in preparation to the holmium materials and has useful peak characteristics in the 730–870 nm region. Useful peaks are found in the didymium solution at approximately 731.6, 740.0, 794.1, 799.0, and 864.4 nm.

USE OF POLYMETHYLMETHACRYLATE-DOPED REFERENCES

This procedure uses solid reference materials manufactured by polymerization of a variety of fluorescent active aromatic ring compounds into an inert polymethylmethacrylate (PMMA) matrix. These materials are supplied as polished blocks for use in a standard cuvette holder (see *Table 3*).

Table 3. Dopant, Excitation, and Emission Data for Selected Reference Materials

Dopant	Excitation λ (nm)	Emission λ (nm)
p-Terphenyl	295	338
Ovalene	342	482
Tetraphenylbutadiene	348	422
Anthracene	360	402

Performance Verification

Results from day-to-day testing of photostable intensity standards are used to verify the performance of an instrument. If the measured intensity does not change from that observed when the instrument was qualified, then instrument performance has not changed and remains qualified. Using such standards to determine an artifact-based or quasi-absolute intensity scale potentially enables measured intensities and instrument sensitivity to be compared over time or between instruments. Intensity measurements should be within the linear range of the instrument's detection system before analysts attempt intensity com-

[2] NIST SRM 2034 is no longer available.

[3] The rounded values are taken from the intrinsic wavelength standard absorption band data from Travis et al. *J Phys Chem Ref Data* 2005;34(1):41. The maximum 95% measurement uncertainty is ±0.06 nm.

parisons, and will be affected by any instrumental effect directly related to the fluorescence signal, e.g., changes in source intensity, detector response, etc.

For instruments with filter-based wavelength selection, analysts use fluorescence standards for spectral correction to determine expected intensity differences caused by filters with different transmission profiles. By compensating for these intensity differences due to spectral mismatch, the analyst can determine a quasi-absolute intensity scale for these instruments. Analysts should approach instrument-to-instrument comparisons with particular caution because of the relatively large and difficult-to-quantify uncertainties involved.

USE OF LOW-CONDUCTIVITY (18-MΩ) WATER

The Raman band of water is used to measure signal-to-noise ratios in fluorescent instruments. The Raman band of water is inherently reproducible and does not degrade with time. Water is convenient to obtain in a pure state and allows interlaboratory comparisons to be made with a high level of confidence. No preparation or dilution is required. The Raman band is a low-level signal that provides a good test for both the optics and the electronics of an instrumental system.

The Raman band of water is not caused by fluorescence but is a result of Raman scattering. For water, the Raman band is always red-shifted 3382 cm^{-1} relative to the excitation.[4] This band usually is measured by excitation at 350 nm, resulting in a Raman peak at 397 nm, but radiation up to 500 nm also can be used as the excitation wavelength, and the corresponding emission peak is 602 nm.

USE OF INTENSITY STANDARDS

Several solid-doped fluorescent materials are available.[5] These polymers or glasses enable the relative spectral correction and day-to-day performance qualification of fluorescence instruments across the UV, visible, and NIR regions from 320 to 830 nm. The high photostability of the materials makes them particularly useful as day-to-day intensity standards, even when spectral correction is not needed or when the excitation wavelength differs from that used for certification. A certified, steady-state emission spectrum is supplied with each certified reference material, along with the estimated total uncertainties. The reference is available in the form of a solid glass, standard-sized cuvette (12.5 mm × 12.5 mm × 45 mm) with three polished long faces for 90° detection and one frosted long face for front-face or epifluorescence detection.

Alternatively, analysts can use fluorophores in solutions that have been shown to be stable.[6,7]

QUALITATIVE AND QUANTITATIVE FLUORESCENCE MEASUREMENTS

Two general classes of procedural measurements commonly are performed by fluorescence spectrometry: qualitative and quantitative.

Qualitative Fluorescence Measurements

Qualitative fluorescence measurements are used to detect the presence of particular analytes and yield a positive or negative answer. The excitation and emission wavelengths often are selected at the peak maximum of the fluorophore to be detected. The minimum amount of analyte needed for a positive result should be considered by the analyst to ensure that the method is appropriate for the particular application. The observation of fluorescence at the peak position above the limit of detection (usually 3 times the noise level) indicates a positive result.

Quantitative Fluorescence Measurements

Quantitative fluorescence measurements are used to determine amounts or concentrations of analytes in unknown samples. These quantities may be determined in absolute units, such as moles or moles per L, or in relative units, such as the ratio of the concentrations of two fluorescent analytes contained in a single unknown solution. These determinations use the following proportionality relating fluorescence signal (S) at a given pair of excitation and emission wavelengths (λ_{ex}, λ_{em}) to fluorescent analyte concentration (c):

$$S \propto I_0 \times \Omega \times R_d \times \alpha \times \Phi \times c$$

I_0 = intensity of the excitation beam
Ω = fraction of the fluorescence collected by the detection system
R_d = responsivity of the detection system

[4] The red-shift value is taken from Parker CA. Raman spectra in spectrofluorimetry. *Analyst*. 1959;84:446–453.
[5] Available from commercial vendors and from NIST as SRMs 2940 (orange emission), 2941 (green emission), 2942 (UV emission), 2943 (blue emission), and 2944 (red/NIR emission).
[6] Commercial vendors provide a 1-mg/L solution of quinine sulfate dehydrate in 0.105 M perchloric acid that has been fully characterized by NIST as SRM 936a.
[7] A series of day-to-day Intensity Standards is available from the German Federal Institute for Materials Research and Testing (BAM).

α = absorption coefficient
Φ = fluorescence quantum yield
c = concentration of the fluorescent analyte

This linear proportionality with concentration applies to optically dilute samples (e.g., solutions with an absorbance of less than 0.05 at a path length of 1 cm).

GOOD SPECTROSCOPIC PRACTICE

Comparisons of a test specimen with a Reference Standard are best made at a peak of spectral emission for the compound of interest. Assays based on spectrofluorometry give the commonly accepted wavelengths for excitation and peak spectral emission of the substance in question. Different spectrofluorometers may show minor variation in the apparent wavelength of this peak. Comparisons should be made at the wavelength at which peak emission occurs. If this differs from the wavelength specified in the monograph by more than ±1 nm in the range of 200–400 nm or by more than ±2 nm in the range of 400–800 nm, recalibration of the instrument may be indicated.

Use of Reference Standards

With few exceptions, pharmacopeial spectrofluorometric procedures provide results by comparison against a USP Reference Standard. This ensures measurement under identical conditions for the test specimen and the Reference Standard. These conditions could include wavelength setting, spectral bandwidth selection, cell placement and correction, and intensity levels. Cells that exhibit identical optical fluorescence characteristics at a specific wavelength may differ considerably at other wavelengths. Analysts should establish and use appropriate cell corrections where required.

The terms *similar preparation* and *similar solution* in tests and assays that involve spectrofluorometry indicate that the Reference Standard should be prepared and observed in a manner that is identical to that used for the sample under test. Usually when a solution of the specified Reference Standard is prepared at (i.e., within 10% of) the desired concentration, the fluorescence intensity is calculated on the basis of the exact amount weighed out. If analysts have not used a previously dried specimen of the Reference Standard, they should correct this intensity on the anhydrous basis.

The expressions *concomitantly determine* and *concomitantly measured* as used in procedures that involve spectrofluorometry indicate that the fluorescence of both the sample solution and the standard solution, relative to the specified test blank, are to be measured in immediate succession.

Sample Solution Preparation

For determinations using UV or visible spectrofluorometry, the specimen generally is dissolved in a solvent. Unless otherwise directed in the monograph, determinations are made at room temperature by using a path length of 1 cm. Many solvents are suitable for these ranges, including water, alcohols, chloroform, lower hydrocarbons, ethers, and dilute solutions of strong acids and alkalis. Solvents should be free from contaminants that fluoresce in the spectral region under examination. For the solvent, water-free methanol or alcohol or alcohol that has been denatured by the addition of methanol but does not contain benzene or other interfering impurities should be used. Spectrophotometric-quality solvents that are guaranteed to be free from contaminants are available commercially from several sources, but some analytical reagent-grade organic solvents may contain traces of impurities that fluoresce strongly in the UV region. New lots of these solvents should be checked for their transparency, and analysts should take care to use the same lot of solvent for the preparation of the sample solution, the standard solution, and the blank. Solvents that do not have an interfering fluorescence signature at the wavelength(s) of interest should be used. In normal usage, the fluorescence baseline intensity should not be more than 2% of the expected measurement signal unless a larger value previously has been justified.

Assays in the visible region usually call for comparing concomitantly the fluorescence intensities produced by the sample solution with that produced by a standard solution that contains approximately an equal quantity of a USP Reference Standard. In some situations, it may be permissible to omit the use of a Reference Standard. This is true when spectrofluorometric assays are made with routine frequency, when a suitable standard curve is available and is prepared with the appropriate USP Reference Standard, and when the substance assayed conforms to Beer–Lambert–Bouguer Law within the range of about 75%–125% of the final concentration used in the assay. Under these circumstances, the fluorescence intensity found in the assay can be interpolated on the standard curve, and the assay result can be calculated. Such standard curves should be confirmed frequently and always when a new spectrofluorometer or new lots of reagents are put into use.

VALIDATION AND VERIFICATION

Validation

Validation is required when a procedure based on fluorescence spectroscopy is intended for use as an alternative to the official procedure. The objective of validation is to demonstrate that the measurement is suitable for its intended purpose, includ-

ing the following: quantitative determination of the main component in a drug substance or a drug product (Category I assays), quantitative determination of impurities or limit tests (Category II), and identification tests (Category IV). Depending on the category of the test (for additional information, see *Table 2* in *Validation of Compendial Procedures* ⟨1225⟩), the process for analytical procedure validation for fluorescence requires testing for linearity, range, accuracy, specificity, precision, detection limit, quantitation limit, and robustness. These analytical performance characteristics apply to externally standardized procedures and those that use standard additions. Chapter ⟨1225⟩ provides definitions and general guidance about analytical procedures validation without indicating specific validation criteria for each characteristic. The intention of the following sections is to provide the user with specific validation criteria that represent the minimum expectations for fluorescence technology. For each particular application tighter criteria may be needed in order to demonstrate suitability for the intended use.

ACCURACY

For Category I, Category II, and Category III procedures, accuracy is determined by conducting recovery studies with the appropriate matrix spiked with known concentrations of the analyte. Analysts also can compare assay results obtained using the fluorescence procedure under validation to those from an established analytical procedure.
Validation criteria: 98.0%–102.0% mean recovery for a drug substance, 95.0%–105.0% mean recovery for a drug product assay, and 80.0%–120.0% mean recovery for impurity analysis. These criteria must be met throughout the intended range.

Precision

REPEATABILITY

Repeatability of the analytical procedure is assessed by measuring the concentrations of six independently prepared sample solutions at 100% of the assay test concentration. Alternatively, repeatability is assessed by measuring concentrations of three replicates of three separate sample solutions at different concentrations. The three concentrations should be sufficiently similar so that the repeatability is similar across the concentration range. If this is done, the repeatability at the three concentrations can be pooled for comparison to the acceptance criteria.
Validation criteria: The relative standard deviation is NMT 1.0% for a drug substance, NMT 2.0% for a drug product assay, and NMT 20.0% for impurity analysis.

Intermediate Precision

The effect of random events on the analytical precision of the procedure should be evaluated. Typical variables include performing the analysis on different days, using different instrumentation, and having the method performed by two or more analysts. As a minimum, any combination of at least two of these factors totaling six experiments will provide an estimation of intermediate precision.
Validation criteria: The relative standard deviation is NMT 1.0% for a drug substance, NMT 3.0% for a drug product assay, and NMT 25.0% for impurity analysis.

SPECIFICITY

In fluorescence measurements, specificity is ensured by the use of a Reference Standard wherever possible and is demonstrated by the lack of interference from other components present in the matrix.
Validation criteria: Demonstrated by meeting the accuracy requirement

DETECTION LIMIT

Analysts can estimate the detection limit (DL) by calculating the standard deviation of NLT six replicate measurements of a blank solution and multiplying by 3.3. Alternatively, the standard deviation can be determined from the error of the intercept from a calibration curve or by demonstration that the signal-to-noise ratio is >3.3. Analysts must confirm the estimated DL by analyzing samples at the calculated concentration.

QUANTITATION LIMIT

Analysts can estimate the quantitation limit (QL) by calculating the standard deviation of NLT six replicate measurements of a blank solution and multiplying by 10. Alternatively, the standard deviation can be determined from the error at the intercept from a calibration curve or by demonstration that the signal-to-noise ratio is >10.

A sample solution prepared from a representative sample matrix spiked at the required QL concentration is measured to confirm sufficient sensitivity and adequate precision. The observed signal-to-noise ratio at the required QL should be >10.

Validation criteria: For the estimated limit of quantitation to be considered valid, the measured concentration must be accurate and precise at a level equal to or less than 50% of the specification.

LINEARITY

A response curve between the analyte concentration and the fluorescence signal is prepared from NLT five Standard solutions at concentrations that encompass the anticipated concentration of the sample solution. Analysts then should evaluate the standard curve for linearity using appropriate statistical methods such as a least-squares regression. Deviation from linearity can result from either instrumental or sample factors, or both, and can be reduced to acceptable levels by reduction of the analyte concentration and thereby the associated absorbance values.
Validation criteria: The correlation coefficient (*R*) must be NLT 0.995 for Category I assays and NLT 0.99 for Category II quantitative tests.

RANGE

The operational range of an analytical instrument (and the analytical procedure as a whole) is the interval between the upper and lower concentrations (amounts) of analyte in the sample (including these concentrations) for which it has been demonstrated that the instrumental response function has a suitable level of precision, accuracy, and linearity.
Validation criteria: For Category I tests, the validation range for 100.0% centered acceptance criteria is 80.0%–120.0%. For noncentered acceptance criteria, the validation range is 10.0% below the lower limit to 10.0% above the upper limit. For content uniformity, the validation range is 70.0%–130.0%. For Category II tests, the validation range covers 50.0%–120.0% of the acceptance criteria.

ROBUSTNESS

Analysts should demonstrate the reliability of an analytical measurement by deliberate changes to experimental parameters. For fluorescence these changes can include measuring the stability of the analyte under specified storage conditions, varying pH, removal of oxygen, and adding possible interfering species, to list a few examples. Analysts should determine robustness concurrently using a suitable design-of-experiments procedure.

Verification

Analytical procedures described in *USP–NF* do not require validation. Instead, a verification is used to determine a procedure's suitability under actual conditions of use.

Thus the objective of fluorescence procedure verification is to demonstrate the suitability of a test procedure under actual conditions of use. Performance characteristics that verify the suitability of a fluorescence procedure are similar to those required for any analytical procedure. For additional information, see *Verification of Compendial Procedures* ⟨1226⟩ for a discussion of the applicable general principles. Verification should be performed using a reference material and a well-defined matrix. Verification of compendial fluorescence procedures should at a minimum include the execution of the validation parameters for specificity, accuracy, precision, and quantitation limit, when appropriate, as indicated in *Validation*.

Indirect Measurement Requirements

Some fluorescence procedures employ chromogenic reactions. Generally the requirements for the analytical performance characteristics should be used. In some instances the required accuracy and precision for the direct measurements may not be achievable. Under these circumstances, the accuracy and precision requirements may be widened by as much as 50%. However, any such widening must be justified on scientific grounds and with documented evidence. Under these circumstances, the amount of replication required to produce a scientifically sound reportable value may be increased.

⟨854⟩ MID-INFRARED SPECTROSCOPY

INTRODUCTION

Mid-infrared (mid-IR) spectroscopy is an instrumental method used to measure the absorption of electromagnetic radiation over the wavenumber range between 4000 and 400 cm^{-1} (corresponding to wavelengths between 2.5 and 25 μm). Unless otherwise specified in a monograph or other validated procedure, the region from 3800 to 650 cm^{-1} (corresponding to wavelengths from 2.6 to 15 μm) should be used to ensure compliance with monograph specifications for IR absorption. The ab-

sorption of photons causes the promotion of molecules from a ground state of their vibrational mode to an excited vibrational state.

Vibrational modes are defined by the motion of all atoms in a molecule. When molecules contain certain functional groups, IR absorption often occurs in specific narrow spectral ranges. In these cases, the wavenumbers at which these transitions occur are known as group frequencies. When a vibrational mode involves atomic motions of more than just a few atoms, the frequencies occur over wider spectral ranges and are not characteristic of a particular functional group but are more characteristic of the molecules as a whole. Such bands are known as fingerprint bands. All strong bands that absorb at wavenumbers above 1500 cm^{-1} are group frequencies. Strong bands that absorb below 1500 cm^{-1} can be either group frequencies or fingerprint bands.

For discussion of the theory and principles of measurements, see *Mid-Infrared Spectroscopy—Theory and Practice* ⟨1854⟩, which may be a helpful, but not mandatory, resource.

QUALIFICATION OF IR SPECTROPHOTOMETERS

Qualification of mid-IR spectrophotometers is divided into three components: *Installation Qualification* (IQ), *Operational Qualification* (OQ), and *Performance Qualification* (PQ). For further information, see *Analytical Instrument Qualification* ⟨1058⟩.

Installation Qualification

The IQ requirements provide evidence that the hardware and software are properly installed in the desired location.

Operational Qualification

Because the majority of mid-IR spectra are measured with Fourier-transform IR (FTIR) spectrophotometers, only these instruments will be discussed. [NOTE—No recommended values for signal-to-noise ratio or 100% line stability are included in this chapter because these vary with manufacturer, model, and age of the instrument.]

WAVENUMBER ACCURACY

The most commonly used wavenumber standard for IR spectrophotometry is an approximately 35 µm thick, matte polystyrene film. The spectrum of such a film has several sharp bands at 3060.0, 2849.5, 1942.9, 1601.2, 1583.0, 1154.5, and 1028.3 cm^{-1}. The most frequently chosen band for wavenumber accuracy determination is located at 1601.2 cm^{-1}. Using a suitable polystyrene film or other well-characterized wavenumber standard, scan from 3800 to 650 cm^{-1} wavenumbers, and compare the wavenumber of maximum response of the chosen band using the center-of-gravity, polynomial spline procedure, or other peak-picking algorithms to the known absorption wavenumber of the standard. The acceptable tolerance for the measured wavenumber is ±1.0 cm^{-1}.

Performance Qualification

The purpose of performance qualification (PQ) is to determine that the instrument is capable of meeting the user's requirements for all the parameters that may affect the quality of the measurement.

PROCEDURE

Mid-IR spectra can be measured by transmission, external reflection, internal reflection (often called attenuated total reflection), diffuse reflection, and photoacoustic spectroscopy. Different sample preparation techniques are available for these options. The most common sample preparation techniques are presented below.

Potassium Bromide (KBr) Disks

Certain powdered alkali halides such as potassium bromide, potassium chloride, and caesium iodide coalesce under high pressure and can be formed into self-supporting disks that are transparent to mid-IR radiation. The alkali halide most commonly used is powdered, dry, highly pure potassium bromide, which is transparent to mid-IR radiation above 400 cm^{-1}.

Commercial presses and dies in a range of diameters are available for the preparation of alkali halide and similar disks.

Mineral Oil Mulls

A typical procedure to prepare a mull is to place 10–20 mg of the sample into an agate mortar, and then grind the sample to a fine particle-size powder using a vigorous rotary motion of the pestle. A small drop of the mulling agent is added to the mortar. Rotary motion of the pestle is used to mix the components into a uniform paste, which is transferred to the center of a

clean IR-transparent window (e.g., potassium bromide, sodium chloride, silver bromide, or caesium iodide). A second matching window is placed on top of the mull, and the mull is squeezed to form a thin, translucent film that is free from bubbles.

The most widely used mulling agent for the mid-IR region is a saturated hydrocarbon mineral oil (liquid paraffin, Nujol).

Self-Supported Polymer Films

The mid-IR transmission spectrum of many polymers used as packaging materials is at times recorded from samples prepared as thin self-supporting films using hot compression molding or microtoming.

Capillary Films

Nonvolatile liquids can be examined neat in the form of a thin layer sandwiched between two matching windows that are transparent to mid-IR radiation. The liquid layer must be free of bubbles and must completely cover the diameter of the IR beam focused on the sample.

Liquids and Solutions in Transmission Cells

For the examination of liquid and solution samples, transmission cell assemblies that comprise a window pair, spacer, filling ports, and a holder are available commercially in both macro- and micro-sample configurations.

For laboratory applications, spacers typically are formed from lead, poly(tetrafluoroethylene), or poly(ethylene terephthalate) and can be supplied, depending on spacer materials, in standard thickness path lengths from approximately 6 µm to 1 mm or larger.

Gases

Mid-IR transmission cells for static or flow-through gas and vapor sampling are available in a wide range of materials to suit the application, from laboratory to process scale. In the laboratory, the traditional gas cell has been a 10 cm long cylinder made from borosilicate glass or stainless steel with an approximately 40-mm aperture at each end. Each open end is covered with an end cap that contains one of a pair of mid-IR–transparent windows constructed from, e.g., potassium bromide, zinc selenium, or calcium fluoride.

Attenuated Total Reflection

Attenuated total reflectance spectroscopy relies on the optical phenomenon of radiation passing through a medium of high refractive index at a certain angle of incidence entirely reflected internally at a boundary in contact with a material of lower refractive index. The medium of high refractive index is also known as the internal reflection element (IRE).

The sample under examination should be placed in close contact with the IRE such as diamond, germanium, zinc selenide, or another suitable material of high refractive index. Ensure close and uniform contact between the substance and the whole crystal surface by applying pressure in the case of solid samples or by dissolving the substance in an appropriate solvent and then covering the IRE with the solution and evaporating to dryness.

Diffuse Reflection

The most important and commonly used form of sample preparation for diffuse reflection is to dilute the sample by intimately mixing it with 90%–99% of nonabsorbing diluents such as finely powdered potassium bromide or potassium chloride. The sample dilution has the added benefit of reducing absorption band intensities to an appropriate level.

Microscope Sampling

Coupling a light microscope with a mid-IR spectrophotometer allows spectra to be obtained from very small samples. Generally applied in transmittance or reflectance modes, it provides, for example, a powerful tool for obtaining spectroscopic data of contaminants in pharmaceutical samples.

VALIDATION AND VERIFICATION

Validation

Validation is required when an IR method is intended for use as an alternative to the official procedure for testing an official article.

The objective of an IR method validation is to demonstrate that the measurement is suitable for its intended purpose including: quantitative determination of the main component in a drug substance or a drug product (Category I assays), quantitative determination of impurities or limit tests (Category II), and identification tests (Category IV, see *Table 2* in *Validation of Compendial Procedures* ⟨1225⟩). Depending on the category of the test, the validation process for IR may require the testing of linearity, range, accuracy, specificity, precision, detection limit, quantitation limit, and robustness. If the IR procedure employs a chemometrics model calculated against the response of another analytical technology (e.g., HPLC), then the principles of *Near-Infrared Spectroscopy* ⟨1119⟩, specifically the *Method Validation* section, is to be applied.

Chapter ⟨1225⟩ provides definitions and general guidance on analytical procedures validation without indicating specific validation for each characteristic. The following sections are intended to provide the user with specific validation criteria that represent the minimum expectations for this technology. For each particular application, tighter criteria may be needed in order to demonstrate suitability for the intended use.

ACCURACY

For Category I and II procedures, accuracy can be determined by conducting recovery studies with the appropriate matrix spiked with known concentrations of the analyte. It is also an acceptable practice to compare assay results obtained using the IR procedure under validation with those obtained from an established alternative analytical method.

Validation criteria: 98.0%–102.0% mean recovery for drug substances, 95.0%–105.0% mean recovery for drug product assay, and 70.0%–150.0% mean recovery for impurity analysis. These criteria are met throughout the intended range.

PRECISION

Repeatability: The analytical procedure is assessed by measuring the concentrations of six independently prepared sample preparations at 100% of the assay test concentration. Alternatively it can be based on measurements of three replicates of three separate sample solutions at different concentrations. The three concentrations should be close enough so that the repeatability is constant across the concentration range. If this is done, the repeatability at the three concentrations is pooled for comparison to the acceptance criteria.

Validation criteria: The relative standard deviation is NMT 1.0% for drug substance, NMT 2.0% for drug product, and NMT 20.0% for impurity analysis.

Intermediate precision: The effect on analytical precision caused by changes in variables such as performing the analysis on different days, using different instrumentation, or having the method performed by two or more analysts needs to be assessed. At a minimum, any combination of at least two of these factors totaling six experiments will provide an estimation of intermediate precision.

Validation criteria: The relative standard deviation is NMT 1.0% for drug substance, NMT 3.0% for drug product assay, and NMT 25.0% for impurity analysis.

SPECIFICITY

For Category IV tests, the identity of the analyte should be ensured. Regarding Category I and II procedures, the accuracy requirement also demonstrates specificity for the targeted analytes.

In the case of identification tests, the ability to select between compounds of closely related structure that are likely to be present should be demonstrated. This should be confirmed by obtaining positive results (perhaps by comparison to a known reference material) from samples containing the analyte, coupled with negative results from samples that do not contain the analyte and by confirming that a positive response is not obtained from materials structurally similar to or closely related to the analyte.

QUANTITATION LIMIT

The quantitation limit can be estimated by calculating the standard deviation of NLT 6 replicate measurements of a blank preparation divided by the slope of the calibration line and multiplying by 10. Other suitable approaches can be used (see ⟨1225⟩). A measurement of a representative sample matrix spiked at the estimated quantitation limit concentration must be performed to confirm accuracy.

Validation criteria: For the estimated quantitation limit to be considered valid, the measured concentration must be accurate and precise at a level equal to or less than 50% of the specification.

LINEARITY

A linear relationship between the analyte concentration and the IR spectral response is demonstrated by preparing NLT 5 standard preparations at concentrations encompassing the anticipated concentration of the test preparation. The standard curve should then be evaluated using appropriate statistical methods such as a least squares regression. For experiments that

do not have a linear relationship between analyte concentration and IR spectral response, appropriate statistical methods should be applied to describe the analytical response.

Validation criteria: Correlation coefficient (*R*), NLT 0.995 for Category I assays and NLT 0.99 for Category II quantitative tests.

RANGE

This parameter is demonstrated by meeting linearity, precision, and accuracy requirements.

Validation criteria: For Category I tests, the validation range for 100.0% centered acceptance criteria is 80.0%–120.0%. For non-centered acceptance criteria, the validation range is 10.0% below the lower limit to 10.0% above the upper limit. For content uniformity, the validation range is 70.0%–130.0%. For Category II tests, the validation range covers 50.0%–120.0% of the acceptance criteria.

ROBUSTNESS

The reliability of an analytical measurement should be demonstrated by deliberate changes to experimental parameters. For mid-IR this can include but is not limited to changes in sample preparation procedure or changes in hardware settings.

Verification

U.S. Current Good Manufacturing Practices regulations [21 CFR 211.194(a)(2)] indicate that users of analytical procedures described in *USP–NF* are not required to validate these procedures if provided in a monograph. Instead, they must simply verify their suitability under actual conditions of use.

The objective of an IR procedure verification is to demonstrate that the method, as prescribed in specific monographs, is being executed with suitable accuracy, sensitivity, and precision. *Verification of Compendial Procedures* ⟨1226⟩ notes that if the verification of the compendial procedure, according to the monograph, is not successful, the procedure is not suitable for use with the article under test. It may be necessary to develop and validate an alternative procedure as allowed in *General Notices and Requirements 6.30*.

Although complete revalidation of a compendial procedure is not required, verification of the compendial Mid-IR procedure includes the execution of certain critical parameters. When the method being verified is for identification purposes, specificity is the only parameter required. For quantitative applications, additional validation parameters are studied. Typically these include accuracy, precision, and quantitation limit, as indicated in *Validation*.

⟨855⟩ NEPHELOMETRY, TURBIDIMETRY, AND VISUAL COMPARISON

"Light-scattering" techniques involve measurement of the light scattered or transmitted because of submicroscopic optical density inhomogeneities of the media analyzed (i.e., solutions, gases, or powders). Light-scattering techniques are useful in the determination of weight-average molecular weights of polydisperse systems in the molecular weight range from 1000 to several hundred million. Two such techniques used in pharmaceutical analysis are "turbidimetry" and "nephelometry".

Terms commonly used in describing light-scattering techniques are:

- Turbidance (symbol, S): The light-scattering effect of suspended particles. The amount of suspended matter may be measured by observation of either the transmitted light (turbidimetry) or the scattered light (nephelometry).
- Turbidity (symbol, τ): In light-scattering measurements, the turbidity is the measure of the decrease in incident beam intensity per unit length of a given suspension.

APPARATUS

Light-scattering instruments are available and generally consist of a mercury lamp with filters for the strong green or blue lines, a shutter, a set of neutral filters with known transmittance, and a sensitive photomultiplier to be mounted on an arm that can be rotated around the solution cell and set at any angle from −135° to 0° to +135° by a dial outside of the light-tight housing. Solution cells are of various shapes, such as square for measuring 90° scattering; semioctagonal for 45°, 90°, and 135° scattering; and cylindrical for scattering at all angles. Because the determination of molecular weight requires a precise measurement of the difference in refractive index between the solution and solvent [$(n - n_0)/c$], a second instrument—a differential refractometer—is needed to measure this small difference.

PROCEDURE

Light-Scattering

Turbidity can be measured with a standard photoelectric filter photometer or spectrophotometer, preferably with illumination in the blue portion of the spectrum. Nephelometric measurements require an instrument with a photocell placed so as to receive scattered rather than transmitted light; this geometry also applies to fluorometers so that, in general, fluorometers can be used as nephelometers by proper selection of filters. A ratio turbidimeter combines the technology of 90° nephelometry and turbidimetry: it contains photocells that receive and measure scattered light at a 90° angle from the sample as well as receiving and measuring the forward scatter in front of the sample; it also measures light transmitted directly through the sample. Linearity is attained by calculating the ratio of the 90° angle scattered light measurement to the sum of the forward scattered light measurement and the transmitted light measurement. The benefit of using a ratio turbidimetry system is that the measurement of stray light becomes negligible. The units of turbidity from a calibrated nephelometer are called nephelometric turbidity units (NTUs). NTUs specifically call for a 90° measurement technique and are also based on the turbidity generated by formazin (a suspension made by mixing solutions of hydrazine sulfate and hexamethylenetetramine in water), although safer polymer-bead suspensions are now commercially available and are recognized as an acceptable alternative. Other recognized units for turbidity include the formazin turbidity unit (FTU) and the formazin nephelometric unit (FNU), and when measurements in these units are performed as described above at 90°, these units are comparable to NTUs.

In practice, it is advisable to ensure that settling of the particles being measured is negligible. Ensuring that settling of the particles is negligible is usually accomplished by including a protective colloid in the liquid-suspending medium. It is important that results be interpreted by comparison of readings with those representing known concentrations of suspended matter, produced under precisely the same conditions.

Turbidimetry or nephelometry may be useful for the measurement of precipitates formed by the interaction of highly dilute solutions of reagents, or other particulate matter such as suspensions of bacterial cells. To achieve consistent results, all variables must be carefully controlled. Where such control is possible, extremely dilute suspensions may be measured.

The specimen solute is dissolved in the solvent at several different, accurately known concentrations, with the choice of concentrations being dependent on the molecular weight of the solute and ranging from 1% for $M_w = 10{,}000$ to 0.01% for $M_w = 1{,}000{,}000$. Before measurements are obtained, each solution must be very carefully cleaned by repeated filtration through fine filters (specific monographs provide instructions for sample filtration). A dust particle in the solution vitiates the intensity of the scattered light measured. A criterion for a clear solution is that the dissymmetry, 45°/135° scattered intensity ratio, has attained a minimum.

The turbidity and refractive index of the solutions are measured. From the general 90° light-scattering equation, a plot of HC/τ versus C is made and extrapolated to infinite dilution, and the weight-average molecular weight, M, is calculated from the intercept, $1/M$.

In polydisperse systems, the concentration, turbidity, and average molecular weight are related by the equation:

$$HC/\tau = 1/M$$

H = cluster of constants [(16πK)/3] from scattering equations used to relate intensities to turbidity
C = concentration
τ = turbidity coefficient
M = weight-average molecular weight

Visual Comparison

Where a color or turbidity comparison is directed, color-comparison tubes that are matched as closely as possible in internal diameter and in all other respects should be used. For color comparison, the tubes should be viewed downward, against a white background, with the aid of a light source directed from beneath the bottoms of the tubes. However, for turbidity comparison, the tubes should be viewed horizontally against a dark background with the aid of a light source directed from the sides of the tubes. In conducting limit tests that involve a comparison of colors in two similar containers (e.g., matched color-comparison tubes), a suitable instrument, rather than the unaided eye, may be used.

Where a turbidity comparison is directed:

- Comparison vessels: Color-comparison tubes matched as closely as possible in internal diameter and in all other respects should be used.
- Viewing conditions: Tubes should be viewed horizontally against a dark background with the aid of a light source directed from the sides of the tubes.

Where a color comparison is directed:

- Comparison vessels: Color-comparison tubes matched as closely as possible in internal diameter and in all other respects should be used.
- Viewing conditions: Typical room lighting is applicable to perform assessment. A light source may be used if the practice is consistent between the materials under comparison.

⟨857⟩ ULTRAVIOLET-VISIBLE SPECTROSCOPY

INTRODUCTION

Ultraviolet-visible (UV-Vis) spectra are derived when the interaction between incident radiation and the electron cloud in a chromophore results in an electronic transition involving the promotion of one or more of the outer shell or the bonding electrons from a ground state into a state of higher energy. The UV and visible spectral bands of substances generally are broad and do not possess a high degree of specificity for compound identification. Nevertheless, they are suitable for quantitative assays and, for many substances, are useful as an additional means of identification.

In the Beer–Lambert law the absorbance (A_λ) of a solution at given wavelength, λ, is defined as the logarithm to base 10 of the reciprocal of the transmittance (T_λ):

$$A_\lambda = \log_{10}\left(\frac{1}{T_\lambda}\right) \text{ and } T_\lambda = \frac{I_\lambda}{I_{\lambda 0}}$$

I_λ = intensity of the transmitted radiation at the same wavelength λ
$I_{\lambda 0}$ = intensity of the incident radiation at wavelength λ

In the absence of any other physical or chemical factors, A_λ is proportional to path length, *b*, through which the radiation passes, and to the concentration, *c*, of the substance in the solution in accordance with the following:

$$A_\lambda = \varepsilon_\lambda cb$$

ε_λ = molar absorptivity
c = solute concentration (mol/L)
b = path length (cm)

If the concentration, *c*, is expressed in g/L, the constant ε_λ becomes a_λ, which is called the absorptivity.

The expression

$$A^{1\%}_{1cm}$$

which represents the specific absorbance of a dissolved substance, refers to the absorbance of a 10-g/L solution (1% m/v) in a 1-cm cell measured at a defined wavelength so that:

$$A^{1\%}_{1cm} = 10a_\lambda = 10\varepsilon_\lambda / M$$

M = molar concentration of the solution

When solutions are observed in 1-cm cells, concentrations of about 10 µg of the specimen per mL often will produce absorbances of 0.2–0.8 in the UV or visible region.

For discussion of the theory and principles of measurements, see *Ultraviolet-Visible Spectroscopy—Theory and Practice* ⟨1857⟩, a general information chapter that is not a mandatory resource.

QUALIFICATION OF UV-VIS SPECTROPHOTOMETERS

The suitability of a specific instrument for a given procedure is ensured by a stepwise life cycle evaluation for the desired application from selection to instrument retirement: design qualification (DQ); installation qualification (IQ); an initial performance-to-specification qualification, also known as operational qualification (OQ); and an ongoing performance qualification (PQ). For more details, see *Analytical Instrument Qualification* ⟨1058⟩.

The purpose of this chapter is to provide test methodologies and acceptance criteria to ensure that the instrument is suitable for its intended use (OQ), and that it will continue to function properly over extended time periods as part of PQ. As with any spectrometric device, a UV-Vis spectrophotometer must be qualified for both wavelength (*x*-axis) and photometric (*y*-axis, or signal axis) accuracy and precision, and the fundamental parameters of stray light and resolution must be established. OQ is carried out across the operational ranges required within the laboratory for both the absorbance and wavelength scales.

Installation Qualification

The IQ requirements provide evidence that the hardware and software are properly installed in the desired location.

Operational Qualification

Acceptance criteria for critical instrument parameters that establish "fitness for purpose" are verified during IQ and OQ. Specifications for particular instruments and applications can vary depending on the analytical procedure used and the desired

accuracy of the final result. Instrument vendors often have samples and test parameters available as part of the IQ/OQ package.

Wherever possible in the procedures detailed as follows, certified reference materials (CRMs) are to be used in preference to laboratory-prepared solutions. These CRMs should be obtained from a recognized accredited source and include independently verified traceable value assignments with associated calculated uncertainty. CRMs must be kept clean and free from dust. Recertification should be performed periodically to maintain the validity of the certification.

Control of Wavelengths

Ensure that the accuracy of the wavelength axis (*x*-axis) over the intended operational range is correct within acceptable limits.

For non-diode array instruments, wavelength accuracy and precision are determined over the operational range using at least six replicate measurements. For wavelength accuracy, the difference of the mean measured value to the certified value of the CRM must be within ±1 nm in the UV region (200–400 nm), and in the visible region (400–700 nm) must be within ±2 nm. For wavelength precision, the standard deviation of the mean must not exceed 0.5 nm. For diode array instruments, only one wavelength accuracy measurement is required, and no precision determination needs to be performed. The difference between the certified and measured value of the CRM must not exceed ±1 nm in the UV region (200–400 nm), and in the visible region (400–700 nm) must not exceed ±2 nm.

ATOMIC LINE SPECTRA

This procedure is described as the primary application because the emission lines produced from a discharge lamp are characteristic of the source element and, as a fundamental physical standard, these wavelengths have been measured with an uncertainty of NMT ±0.01 nm. In solution spectrometry, the wavelength accuracy required rarely exceeds 0.5 nm. For these reasons, the atomic line standard values are cited without uncertainty. The lamp needs to be placed at the source position in the spectrophotometer; thus, it can be used only in spectrophotometers that can be operated in a single-beam intensity mode and practically should be implemented only on a system designed to accommodate these sources, e.g., as an accessory.

A commonly employed low-pressure mercury lamp has a number of intense lines that cover a large part of the UV and visible spectra. Two deuterium lines from the source at 486.0 and 656.1 nm often are used by manufacturers as an internal calibration check and can be used for diagnostic purposes (*Table 1*).[1]

Table 1. Recommended Atomic Lines from Low-Pressure Mercury and Deuterium Lamps for Wavelength Calibration Purposes

Element	nm
Hg	253.7
Hg	296.7
Hg	365.0
Hg	404.7
Hg	435.8
D_2	486.0
Hg	546.1
Hg	577.0
Hg	579.1
D_2	656.1

RARE EARTH OXIDE SOLUTIONS

This procedure uses solutions of rare earth oxides prepared by dissolution in acid media. The most frequently used is holmium oxide in perchloric acid. Holmium oxide solution has been internationally accepted as an intrinsic wavelength standard, and suitable CRMs are available commercially.[2] The observed peak maxima are determined using the normal scan mode on the spectrophotometer. The peak maxima for a 4% m/v solution of holmium oxide in perchloric acid at 1.0-nm spectral bandwidth and a path length of 1 cm are shown in *Table 2*.[3]

---

[1] The rounded values are taken from ASTM Standard E275-08.

[2] NIST SRM 2034 is no longer available.

[3] The rounded values are taken from the intrinsic wavelength standard absorption band data from Travis JC, Acosta JC, Andor G, et al. Intrinsic wavelength standard absorption bands in holmium oxide solution for UV/visible molecular absorption spectrophotometry. *J Phys Chem Ref Data.* 2005;34(1):41–57. The maximum 95% measurement uncertainty is ±0.06 nm.

Table 2. Recommended Peak Maxima from a 4% Solution of Holmium Oxide in Perchloric Acid for Wavelength Calibration Purposes

nm
241.1
249.9
278.1
287.2
333.5
345.4
361.3
385.6
416.3
451.4
467.8
485.2
536.6
640.5

If the operational range of the spectrophotometer lies outside the range 240–650 nm, other certified rare earth oxides or other solutions can be used if they are traceable to a national or international standard. Didymium (a mixture of neodymium and praseodymium) is available as a traceable standard both in solution and as a glass. Didymium is similar in preparation to the holmium materials and has useful peak characteristics in the 730–870 nm region. Useful peaks are found in the didymium solution at approximately 731.6, 740.0, 794.1, 799.0, and 864.4 nm.

RARE EARTH GLASSES

This procedure uses glasses manufactured by fusing the appropriate rare earth oxide in a base glass matrix. The most frequently used is holmium, for which the reference wavelengths have been well defined. Although manufacturing can cause batch variation in these glasses, traceable CRMs are commercially available and can be used. Typical values for a holmium glass using a 1.0-nm spectral bandwidth are the following: 241.5, 279.2, 287.5, 333.8, 360.9, 418.8, 445.8, 453.7, 460.2, 536.5, and 637.7 nm.

Control of Absorbance

To establish the transmittance accuracy, precision, and linearity of a given system, it is necessary to verify the absorbance accuracy of a system over its intended operational range by using the following procedures as appropriate for the wavelength and absorbance ranges required.

ACIDIC POTASSIUM DICHROMATE SOLUTIONS IN 0.001 M PERCHLORIC ACID

In the 0–200 mg/L range, potassium dichromate solutions provide reference values of up to 3 absorbance units at one of the certified values of 235, 257, 313, or 350 nm. These solutions are available as CRMs or can be prepared according to NIST from SRM 935a. Using potassium dichromate solutions, the absorbance accuracy must be ±1%*A* (for values above 1.0*A*) or ±0.010*A* (for values below 1.0*A*), whichever is larger. The absorbance precision can be determined as the standard deviation of at least six replicate measurements at two or more absorbance levels over the operational range. The standard deviation must not exceed ±0.5%*A* (for values above 1.0*A*) or ±0.005*A* (for values below 1.0*A*), whichever is larger.

NEUTRAL-DENSITY GLASS FILTERS

These gray glass filters are manufactured from doped glass and have a nominally flat spectrum in the region of the calibration wavelengths. They provide reference values of up to 3 absorbance units at the certified values of 440, 465, 546.1, 590, and 635 nm. These filters are available as CRMs that are traceable to NIST SRM 930e, 1930, and 2930. Other certified standard solutions or optical filters can be used if they are traceable to a national or international standard. Using gray glass filters, the absorbance accuracy must be ±0.8%*A* (for values above 1.0*A*) or ±0.0080*A* (for values below 1.0*A*), whichever is larger. The absorbance precision can be determined as the standard deviation of at least six replicate measurements at two or more absorbance levels over the operational range. The standard deviation must not exceed ±0.5%*A* (for values above 1.0*A*) or ±0.005*A* (for values below 1.0*A*), whichever is larger.

Limit of Stray Light (Stray Radiant Energy)

Although the measurement of absorbance or transmittance is a ratio measurement of intensities and therefore theoretically is independent of monochromatic source intensity, practical measurements are affected by the presence of unwanted radiation called "stray radiant energy" or "stray light". In addition, the adverse effect of stray light increases with aging of optical components and lamps in a spectrophotometer. The effects are greater at the extremes of detector and lamp operational ranges. Analysts must monitor the level of stray light at appropriate wavelength(s) as part of PQ. Stray light can be detected at a given wavelength with a suitable liquid filter. These solutions are available as CRMs or can be prepared at the concentrations shown in *Table 3* by using reagent-grade materials.

Table 3. Spectral Ranges of Selected Materials for Monitoring Stray Light

Spectral Range (nm)	Liquid or Solution
190–205	Aqueous potassium chloride (12 g/L)
210–259	Aqueous sodium iodide or potassium iodide (10 g/L)
250–320	Acetone
300–385	Aqueous sodium nitrite (50 g/L)

When using a 5-mm path length cell (filled with the same filter) as the reference cell, and then measuring the 10-mm cell over the required spectral range, analysts can calculate the stray light value from the observed maximum absorbance using the formula:

$$S_\lambda = 0.25 \times 10^{-2A_\lambda}$$

A_λ = observed maximum absorbance

Acceptance criteria: S_λ is ≤0.01. A_λ ≥0.7*A*.

This procedure simply requires the 10-mm cell measurement to be referenced against the 5-mm cell (filled with the same filter) and therefore can be achieved by either chronological or spatial referencing in any type of spectrophotometer. Alternatively, analysts can measure the absorbance of the filters specified in *Table 3* against the appropriate reference, and record the maximum absorbance value. (An S_λ value of 0.01 is produced by an A_λ value of 0.7*A*, which equates to a maximum absorbance value of 2*A* measured by this alternate procedure.) [Note—For some instruments where absorbance values greater than 3*A* cannot be reported directly, this procedure may require a two-step process whereby the sample beam initially is attenuated by a 1- to 2-*A* filter, the value of which is measured and recorded. After zeroing the instrument with this filter in place, measure the stray-light filter, and again record the absorbance value. The estimated stray light value is now the sum of these two absorbance readings.]

Resolution

If accurate absorbance measurements must be made on benzenoid compounds or other compounds with sharp absorption bands (natural half-bandwidths of less than 15 nm), the spectral bandwidth of the spectrophotometer used should not be greater than 1/8th the natural half-bandwidth of the compound's absorption.

Determine the resolution of the spectrophotometer by using the following procedure. Measure the ratio of the absorbance of a 0.020% (v/v) solution of toluene in hexane (UV grade) at the maximum and minimum at about 269 and 266 nm, respectively, using hexane as the reference. The absorbance ratio obtained depends on the spectral bandwidth of the instrument. For most pharmacopeial quantitative purposes, a spectral bandwidth of 2 nm is sufficient, and the acceptance criteria for the ratio is NLT 1.3.

The effect of spectral bandwidth and measurement temperature on the ratio is shown in *Table 4*.[4]

Table 4. Spectral Bandwidth and Measurement Temperature

Temperature of Measurement	Spectral Bandwidth				
	0.5 nm ± 0.1 nm	1.0 nm ± 0.1 nm	1.5 nm ± 0.1 nm	2.0 nm ± 0.2 nm	3.0 nm ± 0.2 nm
20 ± 1°	2.4–2.5	2.0–2.1	1.6–1.7	1.3–1.4	1.0–1.1
25 ± 1°	2.3–2.4	1.9–2.0	1.6–1.7	1.3–1.4	1.0–1.1
30 ± 1°	2.1–2.2	1.8–1.9	1.5–1.6	1.3–1.4	1.0–1.1

Suitable CRMs may also be used for this measurement. Alternatively, a suitable atomic line can be scanned in single-beam mode, and the peak width at half peak height can be determined. This peak width at half peak height equates to the bandwidth of the spectrophotometer.

[4] ASTM E958 2011.

Performance Qualification

The purpose of PQ is to determine that the instrument is capable of meeting the user's requirements for all the parameters that may affect the quality of the measurement and to ensure that it will function properly over extended periods of time.

PROCEDURE

With few exceptions, compendial spectrophotometric tests and assays call for comparison against a USP Reference Standard. This helps ensure measurement under identical conditions for the test specimen and the reference substance. These conditions could include wavelength setting, spectral bandwidth selection, cell placement and correction, and transmittance levels. Cells that exhibit identical transmittance at a given wavelength may differ considerably in transmittance at other wavelengths. Appropriate cell corrections should be established and used where required.

Comparisons of a test specimen with a reference standard are best made at a peak of spectral absorption for the compound concerned. Assays that prescribe spectrophotometry give the commonly accepted wavelength for peak spectral absorption of the substance in question. Different spectrophotometers may show minor variation in the apparent wavelength of this peak. Good practice demands that comparisons be made at the wavelength at which peak absorption occurs. Should this differ by more than ±1 nm (in the range 200–400 nm) or ±2 nm (in the range 400–800 nm) from the wavelength specified in the individual monograph, recalibration of the instrument may be indicated.

The expressions "similar preparation" and "similar solution" as used in tests and assays involving spectrophotometry indicate that the reference comparator, generally a USP Reference Standard, should be prepared and observed in an identical manner for all practical purposes to that used for the test specimen. Usually when analysts make up the solution of the specified reference standard, they prepare a solution of about (i.e., within 10%) the desired concentration, and they calculate the absorptivity on the basis of the exact amount weighed out. If a previously dried specimen of the reference standard has not been used, the absorptivity is calculated on the anhydrous basis. The expressions "concomitantly determine" and "concomitantly measure" as used in tests and assays involving spectrophotometry indicate that the absorbances of both the solution containing the test specimen and the solution containing the reference specimen, relative to the specified test blank, must be measured in immediate succession.

General Chapters

Sample Solution Preparation

For determinations using UV or visible spectrophotometry, the specimen generally is dissolved in a solvent. Unless otherwise directed in the monograph, analysts make determinations at room temperature using a path length of 1 cm. Many solvents are suitable for these ranges, including water, alcohols, lower hydrocarbons, ethers, and dilute solutions of strong acids and alkalis. Precautions should be taken to use solvents that are free from contaminants that absorb in the spectral region under examination. For the solvent, analysts typically should use water-free methanol or alcohol or alcohol denatured by the addition of methanol but without benzene or other interfering impurities. Solvents of special spectrophotometric quality, guaranteed to be free from contaminants, are available commercially from several sources. Some other analytical reagent-grade organic solvents may contain traces of impurities that absorb strongly in the UV region. New lots of these solvents should be checked for their transparency, and analysts should take care to use the same lot of solvent for preparation of the test solution, the standard solution, and the blank. The best practice is to use solvents that have NLT 40% transmittance (39.9%T = 0.399A) at the wavelength of interest.

Assays in the visible region usually call for concomitantly comparing the absorbance produced by the assay preparation with that produced by a standard preparation containing approximately an equal quantity of a USP Reference Standard. In some situations, analysts can omit the use of a reference standard (e.g., when spectrophotometric assays are made with routine frequency) when a suitable standard curve is available and is prepared with the appropriate USP Reference Standard, and when the substance assayed conforms to the Beer–Lambert law within the range of about 75%–125% of the final concentration used in the assay. Under these circumstances, the absorbance found in the assay may be interpolated on the standard curve, and the assay result can be calculated. Such standard curves should be confirmed frequently and always when a new spectrophotometer or new lots of reagents are put into use.

VALIDATION AND VERIFICATION

Validation

Validation is required when a UV-Vis method is intended for use as an alternative to the official procedure for testing an official article.

The objective of UV-Vis method validation is to demonstrate that the measurement is suitable for its intended purpose, including quantitative determination of the main component in a drug substance or a drug product (Category I assays), quantitative determination of impurities or limit tests (Category II), and identification tests (Category IV). Depending on the category of the test (see *Table 2* in *Validation of Compendial Procedures* ⟨1225⟩), the analytical method validation process for UV-Vis re-

quires testing for linearity, range, accuracy, specificity, precision, detection limit, quantitation limit, and robustness. These analytical performance characteristics apply to externally standardized procedures and those that use standard additions.

Chapter ⟨1225⟩ provides definitions and general guidance on analytical procedures validation without indicating specific validation criteria for each characteristic. The intention of the following sections is to provide the user with specific validation criteria that represent the minimum expectations for this technology. For each particular application, tighter criteria may be needed in order to demonstrate suitability for the intended use.

ACCURACY

For Category I, II, and III procedures, accuracy can be determined by conducting recovery studies with the appropriate matrix spiked with known concentrations of the analyte. Analysts also can compare assay results obtained using the UV-Vis procedure under validation to those from an established analytical procedure.

Validation criteria: 98.0%–102.0% mean recovery for the drug substances, 95.0%–105.0% mean recovery for the drug product assay, and 80.0%–120.0% mean recovery for the impurity analysis. These criteria are met throughout the intended range.

Precision

REPEATABILITY

The repeatability of the analytical procedure is assessed by measuring the concentrations of six independently prepared sample solutions at 100% of the assay test concentration. Alternatively, it can be assessed by measuring the concentrations of three replicates of three separate sample solutions at different concentrations. The three concentrations should be close enough so that the repeatability is constant across the concentration range. If this is done, the repeatability at the three concentrations is pooled for comparison to the acceptance criteria.

Validation criteria: The relative standard deviation is NMT 1.0% for the drug substance, NMT 2.0% for the drug product assay, and NMT 20.0% for the impurity analysis.

INTERMEDIATE PRECISION

The effect of random events on the analytical precision of the method must be established. Typical variables include performing the analysis on different days, using different instrumentation, and/or having the method performed by two or more analysts. At a minimum, any combination of at least two of these factors totaling six experiments will provide an estimation of intermediate precision.

Validation criteria: The relative standard deviation is NMT 1.5% for the drug substance, NMT 3.0% for the drug product assay, and NMT 25.0% for the impurity analysis.

SPECIFICITY

In UV-Vis measurements, specificity is ensured by the use of a reference standard wherever possible and is demonstrated by the lack of interference from other components present in the matrix.

DETECTION LIMIT

The detection limit (DL) can be estimated by calculating the standard deviation of NLT 6 replicate measurements of a blank solution and multiplying by 3.3. Alternatively, the standard deviation can be determined from the error of the intercept from a calibration curve or by determining that the signal-to-noise ratio is >3.3. The estimated DL must be confirmed by analyzing samples at the calculated concentration.

QUANTITATION LIMIT

The quantitation limit (QL) can be estimated by calculating the standard deviation of NLT 6 replicate measurements of a blank solution and multiplying by 10. Alternatively, the standard deviation can be determined from the error of the intercept from a calibration curve or by determining that the signal-to-noise ratio is >10.

Measurement of a test solution prepared from a representative sample matrix spiked at the required QL concentration must be performed to confirm sufficient sensitivity and adequate precision. The observed signal-to-noise ratio at the required QL should be >10. [NOTE—A suitable procedure for measuring the signal-to-noise ratio is given in ASTM 1657-98 (2006) *Standard Practice for the Testing of Variable-Wavelength Photometric Detectors Used in Liquid Chromatography*.]

Validation criteria: For the estimated limit of quantitation to be considered valid, the measured concentration must be accurate and precise at a level ≤50% of the specification.

LINEARITY

A linear relationship between the analyte concentration and UV-Vis response must be demonstrated by preparation of NLT five standard solutions at concentrations encompassing the anticipated concentration of the test solution. The standard curve is then evaluated using appropriate statistical methods such as a least-squares regression. Deviation from linearity results from either instrumental or sample factors, or both, and can be reduced to acceptable levels by reducing the analyte concentration and thereby the associated absorbance values.
Validation criteria: The correlation coefficient (*R*) must be NLT 0.995 for Category I assays and NLT 0.99 for Category II quantitative tests.

RANGE

The operational range of an analytical instrument (and the analytical procedure as a whole) is the interval between the upper and lower concentrations (amounts) of analyte in the sample (including these concentrations) for which it has been demonstrated that the instrumental response function has a suitable level of precision, accuracy, and linearity.
Validation criteria: For Category I tests, the validation range for 100.0% centered acceptance criteria is 80.0%–120.0%. For noncentered acceptance criteria, the validation range is 10.0% below the lower limit to 10.0% above the upper limit. For content uniformity, the validation range is 70.0%–130.0%. For Category II tests, the validation range covers 50.0%–120.0% of the acceptance criteria.

ROBUSTNESS

The reliability of an analytical measurement is demonstrated by deliberate changes to experimental parameters. For UV-Vis this can include measuring the stability of the analyte under specified storage conditions, varying pH, and adding possible interfering species, to list a few examples. Robustness is determined concurrently using a suitable design for the experimental procedure.

INDIRECT MEASUREMENT REQUIREMENTS

For certain UV-Vis procedures, chromogenic reactions are employed. Generally the requirements for the analytical performance characteristics are used. In some instances, the required accuracy and precision criteria for the direct measurements may not be achievable. Under these circumstances, the accuracy and precision requirements can be widened by as much as 50%. Any such widening must be justified on scientific grounds and with documented evidence. It may be necessary to increase the amount of replication required to produce a scientifically sound reportable value.

Verification

Current US Good Manufacturing Practices regulations [21 CFR 211.194(a)(2)] indicate that users of analytical procedures described in *USP–NF* are not required to validate these procedures if provided in a monograph. Instead, they simply must verify their suitability under actual conditions of use.

The objective of a UV-Vis procedure verification is to demonstrate the suitability of a test procedure under actual conditions of use. Performance characteristics that verify the suitability of a UV-Vis procedure are similar to those required for any analytical procedure. A discussion of the applicable general principles is found in *Verification of Compendial Procedures* ⟨1226⟩. Verification is usually performed using a reference material and a well-defined matrix. Verification of compendial UV-Vis procedures includes at minimum the execution of the validation parameters for specificity, accuracy, precision, and quantitation limit, when appropriate, as indicated under *Validation*.

⟨861⟩ SUTURES—DIAMETER

The gauge for determining the diameter of sutures is of the dead-weight type, mechanical or electrical, and equipped with a direct-reading dial, a digital readout, or a printed readout. Use a gauge graduated to 0.002 mm or smaller. The anvil of the gauge is about 50 mm in diameter, and the presser foot is 12.70 ± 0.02 mm in diameter. The presser foot and moving parts connected therewith are weighted so as to apply a total load of 210 ± 3 g to the specimen. The presser foot and anvil surfaces are plane to within 0.005 mm and parallel to each other to within 0.005 mm. For measuring the diameter of sutures of metric size 0.4 and smaller, remove the additional weight from the presser foot so that the total load on the suture does not exceed 60 g.

COLLAGEN ABSORBABLE SURGICAL SUTURE

Determine the diameter immediately after removal from the immediate container and without stretching. Lay the strand across the center of the anvil and presser foot, and gently lower the foot until its entire weight rests upon the suture. Measure the diameter of each strand at three points corresponding roughly to one-fourth, one-half, and three-fourths of its length.

SYNTHETIC ABSORBABLE SURGICAL SUTURE

Proceed as directed for *Nonabsorbable Surgical Suture.*

NONABSORBABLE SURGICAL SUTURE

Lay the strand across the center of the anvil and presser foot, and gently lower the foot until its entire weight rests upon the suture. Measure nonabsorbable sutures, whether packaged in dry form or in fluid, immediately after removal from the container, without prior drying or conditioning.

Measure the diameter of the suture at three points corresponding roughly to one-fourth, one-half, and three-fourths of its length. In the case of braided suture of sizes larger than 3-0 (metric size 2), make two measurements at each point at right angles to each other, and use the average as the observed diameter at that point.

In measuring multifilament sutures, attach a portion of the designated section of the strand in a fixed clamp in such a way that the strand lies across the center of the anvil. While holding the strand in the same plane as the surface of the anvil, place the strand under tension by suitable means, such as by passing the free end of the strand around a cylinder or a pulley and attaching to the free end a weight of about one-half of the knot-pull limit for the non-sterilized Class I suture of the size concerned, taking care not to permit the strand, if twisted, to untwist. Measure the diameter at the designated points on the strand, and calculate the average diameter likewise as directed.

⟨871⟩ SUTURES—NEEDLE ATTACHMENT

Absorbable (collagen) surgical sutures and nonabsorbable surgical sutures with *Standard Needle Attachment* are such that the needles are firmly attached and are not intended to be separated. Sutures supplied with eyeless needles attached fall into either the category of *Standard Needle Attachment* or the category of *Removable Needle Attachment. Removable Needle Attachment* of both absorbable and nonabsorbable surgical sutures is such that the needle may be deliberately separated from the suture by means of a quick tug. Both types of attachments are tested on equipment as specified under *Tensile Strength* ⟨881⟩.

PROCEDURE

Clamp each of 5 sutures in the tensilometer so that the needle is in the fixed clamp with all of the swaged portion exposed and in line with the direction of force applied to the suture by the moving clamp. Determine the force required to detach the suture from the needle. In the case of *Standard Needle Attachment*, the suture may break without needle detachment.

Standard Needle Attachment

The requirements are met if neither the average of the 5 values nor any individual value is less than the limit given for the designated size in *Table 1*.

Table 1. Standard Needle Attachment for Absorbable and Nonabsorbable Sutures

Metric Size (Gauge No.)		Limits on Needle Attachment					
Absorbable Collagen Suture	Nonabsorbable and Synthetic Absorbable Sutures	USP Size	Average (in kgf) (Min.)	Individual (in kgf) (Min.)	Average (in N) (Min.)	Individual (in N) (Min.)
—	0.1	11-0	0.007	0.005	0.069	0.049
—	0.2	10-0	0.014	0.010	0.137	0.098
0.4	0.3	9-0	0.021	0.015	0.206	0.147
0.5	0.4	8-0	0.050	0.025	0.490	0.245
0.7	0.5	7-0	0.080	0.040	0.784	0.392
1	0.7	6-0	0.17	0.08	1.67	0.784

Table 1. Standard Needle Attachment for Absorbable and Nonabsorbable Sutures *(Continued)*

Metric Size (Gauge No.)		Limits on Needle Attachment				
Absorbable Collagen Suture	**Nonabsorbable and Synthetic Absorbable Sutures**	**USP Size**	**Average (in kgf) (Min.)**	**Individual (in kgf) (Min.)**	**Average (in N) (Min.)**	**Individual (in N) (Min.)**
1.5	1	5-0	0.23	0.11	2.25	1.08
2	1.5	4-0	0.45	0.23	4.41	2.25
3	2	3-0	0.68	0.34	6.67	3.33
3.5	3	2-0	1.10	0.45	10.8	4.41
4	3.5	0	1.50	0.45	14.7	4.41
5	4	1	1.80	0.60	17.6	5.88
6 and larger	5 and larger	2 and larger	1.80	0.70	17.6	6.86

Removable Needle Attachment

The requirements are met if the individual values of the 5 sutures are within the limits shown in *Table 2*. [NOTE—For either type of attachment, if not more than 1 of the individual values falls outside the prescribed limits, repeat the test on an additional 10 sutures: the requirements of the test are met if none of the 10 additional values falls outside the individual limit requirements.]

Table 2. Removable Needle Attachment for Absorbable and Nonabsorbable Sutures

Metric Size (Gauge No.)		Limits on Needle Attachment				
Absorbable Collagen Suture	**Nonabsorbable and Synthetic Absorbable Sutures**	**USP Size**	**Minimum (in kgf)**	**Maximum (in kgf)**	**Minimum (in N)**	**Maximum (in N)**
1.5	1	5-0	0.028	1.59	0.274	15.6
2	1.5	4-0	0.028	1.59	0.274	15.6
3	2	3-0	0.028	1.59	0.274	15.6
3.5	3	2-0	0.028	1.59	0.274	15.6
4	3.5	0	0.028	1.59	0.274	15.6
5	4	1	0.028	1.59	0.274	15.6
6	5	2	0.028	1.59	0.274	15.6

⟨881⟩ TENSILE STRENGTH

Devices for measurement of tensile strength used in the United States may be calibrated in the English units of measure. The following directions are given in metric units with the understanding that the corresponding English equivalents may be used.

SURGICAL SUTURE

Determine the tensile strength of surgical suture on a motor-driven tensile strength testing machine having suitable clamps for holding the specimen firmly and using either the principle of constant rate of load on specimen or the principle of constant rate of elongation of specimen, as described below. The apparatus has two clamps for holding the strand. One of these clamps is mobile. The clamps are designed so that the strand being tested can be attached without any possibility of slipping. Gauge length is defined as the interior distance between the two clamps. For gauge lengths of 125 to 200 mm, the mobile clamp is driven at a constant rate of elongation of 30 ± 5 cm per minute. For gauge lengths of less than 125 mm, the rate of elongation per minute is adjusted to equal 2 times the gauge length per minute. For example, a 5-cm gauge length has a rate of elongation of 10 cm per minute.

Determine the tensile strength of the suture, whether packaged in dry form or in fluid, promptly after removal from the container, without prior drying or conditioning. Attach one end of the suture to the clamp at the load end of the machine, pass the other end through the opposite clamp, applying sufficient tension so that the specimen is taut between the clamps, and engage the second clamp. Perform as many breaks as are specified in the individual monograph. If the break occurs at the clamp, discard the reading on the specimen.

Procedure for a Machine Operating on the Principle of Constant Rate of Load on Specimen

This description applies to the machine known as the Incline Plane Tester.

The carriage used in any test is of a weight such that when the break occurs, the position of the recording pen on the chart is between 20% and 80% of the capacity that may be recorded on the chart. The friction in the carriage is low enough to permit the recording pen to depart from the zero line of the chart at a point not exceeding 2.5% of the capacity of the chart when no specimen is held in the clamps.

For surgical sutures of intermediate and larger sizes, the clamp for holding the specimen is of the roll type, with a flat gripping surface. The roll has a diameter of 19 mm and the flat gripping surface is not less than 25 mm in length. The length of the specimen, when inserted in the clamps, is at least 127 mm from nip to nip. The speed of inclination of the plane of the tester is such that it reaches its full inclination of 30° from the horizontal in 20 ± 1 seconds from the start of the test.

For surgical sutures of small sizes, the suitable clamp has a flat gripping surface of not less than 13 mm in length. The speed of inclination of the plane is such that it reaches its full inclination of 30° from the horizontal in 60 ± 5 seconds from the start of the test.

Except where straight pull (no knot required) is indicated in the suture monograph, tie the test suture into a surgeon's knot with one turn of suture around flexible rubber tubing of 6.5-mm inside diameter and 1.6-mm wall thickness. The surgeon's knot is a square knot in which the free end is first passed twice, instead of once, through the loop, and pulled taut, then passed once through a second loop, and the ends are drawn taut so that a single throw is superimposed upon a double throw. Start the first knot with the left end over the right end, exerting sufficient tension to tie the knot securely. Where the test specimen includes a knot, place the specimen in the testing device with the knot approximately midway between the clamps. Leave the flexible rubber tubing in place for the duration of the test.

Procedure for a Machine Operating on the Principle of Constant Rate of Elongation of Specimen

This description applies to any suitable tensile testing machine that operates on the principle of constant rate of elongation of specimen.

Except where straight pull (no knot required) is indicated in the suture monographs, tie the test suture into a simple knot formed by placing one end of a strand held in the right hand over the other end held in the left hand, passing one end over the strand and through the loop so formed, and pulling the knot tight. The specimen is placed in the testing device with the knot approximately midway between the clamps.

TEXTILE FABRICS AND FILMS

Determine the tensile strength of textile fabrics, including adhesive tape, on a constant-speed or pendulum type of testing machine of the following general description.

The clamps for holding the specimen are smooth, flat, parallel jaws that are not less than 25 mm in length in the dimension parallel to the direction of application of the load. When the width of the strip being tested does not exceed 19 mm, the jaws of the clamp should be at least 25 mm wide. If the width of the strip is greater than 19 mm and not greater than 44 mm, the width of the jaws of the clamp should be at least 50 mm. If the width of the specimen is greater than 44 mm, cut a 25-mm strip, and use a clamp with jaws not less than 50 mm wide. Round all edges that might have a cutting action on the specimen to a radius of 0.4 mm. The jaws are 76.2 mm apart at the beginning of the test, and they separate at the rate of 30.5 cm ± 13 mm per minute. The machine is of such capacity that when the break occurs, the deviation of the pendulum from the vertical is between 9° and 45°.

⟨891⟩ THERMAL ANALYSIS

INTRODUCTION

Precisely determined thermodynamic events, such as a change of state, can indicate the identity and purity of drugs. Compendial standards have long been established for the melting or boiling temperatures of substances. These transitions occur at characteristic temperatures, and the compendial standards therefore contribute to the identification of the substances. Because impurities affect these changes in predictable ways, the same compendial standards contribute to the control of the purity of the substances.

Thermal analysis in the broadest sense is the measurement of physical–chemical properties of materials as a function of temperature. Instrumental methods have largely supplanted older methods dependent on visual inspection and measurements under fixed or arbitrary conditions, because they are objective, provide more information, afford permanent records, and are generally more sensitive, precise, and accurate. Furthermore, they may provide information on desolvation, dehydration, de-

composition, crystal perfection, polymorphism, melting temperature, sublimation, glass transitions, evaporation, pyrolysis, solid-solid interactions, and purity. Such data are useful in the characterization of substances with respect to compatibility, stability, packaging, and quality control. The measurements used most often in thermal analysis, i.e., transition and melting point temperatures by differential scanning calorimetry (DSC), thermogravimetric analysis, hot-stage microscopy, and eutectic impurity analysis, are described here.

TRANSITION AND MELTING POINT TEMPERATURES

As a specimen is heated, transitions can be observed using differential scanning calorimetry (DSC), differential thermal analysis (DTA), or hot-stage microscopy. In heat-flux DSC, the heat differential between the sample and reference material is determined. In power compensation DSC, the sample and reference materials are maintained at the same temperature, using individual heating elements, and the difference in power input to the two heaters is recorded. DTA monitors the difference in temperatures between the sample and the reference. The transitions that may be observed include those shown in *Table 1* below. In the case of melting, both an "onset" and a "peak" temperature can be determined objectively and reproducibly, often to within a few tenths of a degree. Although these temperatures are useful for characterizing substances, and the difference between the two temperatures is indicative of purity, the values cannot be directly compared to visual "melting-range" or "melting-point" values or with constants such as the triple point of the pure material.

Furthermore, caution should be used when comparing results obtained by different methods of analysis. Optical methods may measure the melting point as the temperature where the last trace of solid coalesces. In contrast, melting points measured by DSC may refer to the onset temperature or the temperature where the maximum melting rate (vertex) was observed. However, the vertex is sensitive to sample weight, heating rate, and other factors, whereas the onset temperature is less affected by these factors. With thermal techniques, it is necessary to consider the limitations of solid solution formation, insolubility in the melt, polymorphism, and decomposition during the analysis.

Table 1

Solid to liquid	Melting	Endothermic
Liquid to gas	Vaporization	Endothermic
Liquid to solid	Freezing	Exothermic
	Crystallization	Exothermic
Solid to gas	Sublimation	Endothermic
Solid to solid	Glass transition	Second order event
	Desolvation	Endothermic
	Amorphous to crystalline	Exothermic
	Polymorphic	Endothermic or Exothermic

Reporting Results of Instrumental Methods

A complete description of the conditions employed should accompany each thermogram, including make and model of instrument; record of last calibration; specimen size and identification (including previous thermal history); container; identity, flow rate, and pressure of gaseous atmosphere; direction and rate of temperature change; and instrument and recorder sensitivity.

DETERMINATION OF TRANSITION TEMPERATURE (MELT ONSET TEMPERATURE) AND MELTING POINT TEMPERATURE

Apparatus

Use DTA or DSC instrumentation equipped with a temperature-programming device, thermal detector(s), and a recording system that can be connected to a computer, unless otherwise prescribed by the specific monograph for which this chapter is being used.

Calibration

Calibrate instrumentation for temperature and enthalpy changes, using indium or another suitable certified material. Temperature calibration is performed by heating a standard through the melting transition and comparing the extrapolated onset of melting point of the standard to the certified onset of melting point. The temperature calibration should be conducted at the same heating rate as the experiment. Enthalpy calibration is performed by heating a standard through the melting transition and comparing the calculated heat of fusion to the theoretical value.

Procedure

Accurately weigh an appropriate quantity of the substance to be examined in the sample pan, as described in the specific monograph. Set initial temperature, heating rate, direction of temperature change, and final temperature as specified in the monograph. If not specified in the monograph, these parameters are determined as follows: make a preliminary examination over a wide range of temperatures (typically, room temperature to decomposition temperature, or about 10° to 20° above the melting point) and over a wide range of heating rates (1° to 20° per minute) to reveal any unexpected effects. Then determine a lower heating rate such that decomposition is minimized and the transition temperature is not compromised. Determine a temperature range bracketing the transition of interest such that the baseline can be extended to intersect with the tangent of the melt (see *Figure 1*).

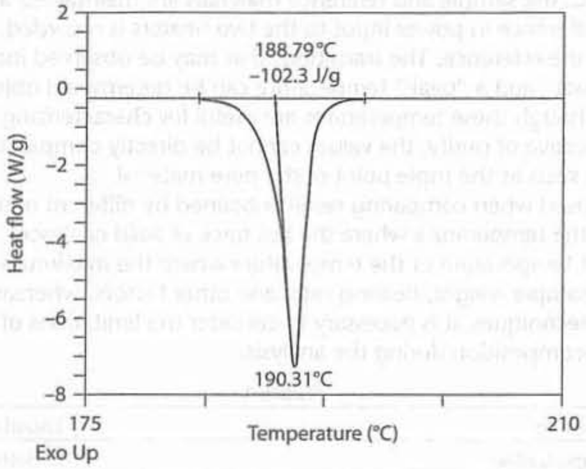

Figure 1. Thermogram.

In examining pure crystalline materials, rates as low as 1° per minute may be appropriate, whereas rates of up to 20° per minute are more appropriate for polymeric and other semicrystalline materials. Begin the analysis, and record the differential thermal analysis curve with the temperature on the *x*-axis and the energy change on the *y*-axis. The melting temperature (melt onset temperature) is the intersection (188.79°) of the extension of the baseline with the tangent at the point of greatest slope (inflexion point) of the curve (see *Figure 1*). The vertex is the temperature at the peak of the curve (190.31°). The enthalpy of the event is proportional to the area under the curve after application of a baseline correction.

THERMOGRAVIMETRIC ANALYSIS

Thermogravimetric analysis involves the determination of the mass of a specimen as a function of temperature, or time of heating, or both. It is often used to investigate dehydration/desolvation processes and compound decomposition. When thermogravimetry is properly applied, it provides more useful information than loss on drying at fixed temperature, often for a fixed time and in what is usually an ill-defined atmosphere. Usually, loss of surface-absorbed solvent can be distinguished from solvent in the crystal lattice and from degradation losses. The measurements can be carried out in atmospheres having controlled humidity and oxygen concentration to reveal interactions with the drug substance, between drug substances, and between active substances and excipients or packaging materials.

Apparatus

While the details depend on the manufacturer, the essential features of the equipment are a recording balance and a programmable heat source. Equipment differs in the ability to handle specimens of various sizes, the means of sensing specimen temperature, and the range of atmosphere control.

Calibration

Calibration is required with all systems: that is, the mass scale is calibrated by the use of standard weights, and calibration of the temperature scale involves the use of standard materials, because it is assumed that the specimen temperature is the furnace temperature. Weight calibration is conducted by measuring the mass of a certified or standard weight and comparing the measured mass with the certified value. Temperature calibration is performed by analyzing a high-purity magnetic standard such as nickel for its curie temperature and comparing the measured value to the theoretical value.

Procedure

Apply the method to the sample, using the conditions described in the monograph, and calculate the mass gain or loss, expressing the change in mass as percentage. Alternatively, place a suitable quantity of material in the sample holder, and record the mass. Because the test atmosphere is critical, the pressure or flow rate and the composition of the gas are specified. Set the initial temperature, heating rate, and final temperature according to the manufacturer's instructions, and initiate the temperature increase. Alternatively, conduct an examination of the thermogram over a wide range of temperatures (typically, from room temperature to the decomposition temperature, or 10° to 20° above the melting point at a heating rate of 1° to 20° per minute). Calculate the mass gain or loss, expressing the change in mass as percentage.

HOT-STAGE MICROSCOPY

Hot-stage microscopy is an analytical technique that involves monitoring the optical properties of the sample using a microscope as a function of temperature. Hot-stage microscopy may be used as a complementary technique to other thermal analysis techniques such as DSC, DTA, and variable temperature X-ray powder diffraction for the solid-state characterization of pharmaceutical compounds. It is useful to confirm transitions such as melts, recrystallizations, and solid-state transformations using a visual technique. The hot-stage microscope must be calibrated for temperature.

EUTECTIC IMPURITY ANALYSIS

The basis of any calorimetric purity method is the relationship between the melting and freezing point depression and the level of impurity. The melting of a compound is characterized by the absorption of latent heat of fusion, ΔH_f, at a specific temperature, T_o. In theory, a melting transition for an absolutely pure crystalline compound should occur within an infinitely narrow range. A broadening of the melting range, due to impurities, provides a sensitive criterion of purity. The effect is apparent visually by examination of thermograms of specimens differing by a few tenths percent in impurity content. A material that is 99% pure is about 20% molten at 3° below the melting point of the pure material (see *Figure 2*).

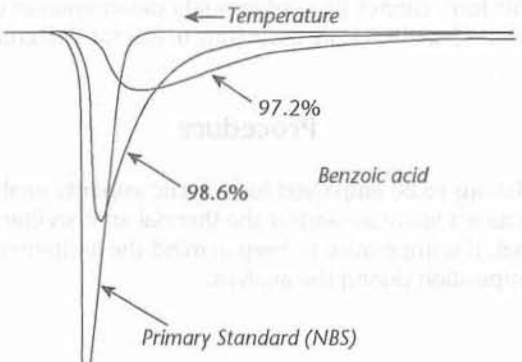

Figure 2. Superimposed thermograms illustrating the effect of impurities on DSC melting peak shape.

The parameters of melting (melting range, ΔH_f, and calculated eutectic purity) are readily obtained from the thermogram of a single melting event using a small test specimen, and the method does not require multiple, precise actual temperature measurements. Thermogram units are directly convertible to heat transfer, millicalories per second.

The lowering of the freezing point in *dilute solutions* by molecules of nearly equal size is expressed by a modified van't Hoff equation:

$$\frac{dT}{dX_2} = \frac{RT^2}{\Delta H_f}(K_D - 1) \qquad (1)$$

in which T = absolute temperature in kelvins; X_2 = mole fraction of minor component (solute, impurity); ΔH_f = molar heat of fusion of the major component in Joules per mol: R = gas constant in Joules per mol × kelvins; and K_D = distribution ratio of solute between the solid and liquid phases.

Assuming that the temperature range is small and that no solid solutions are formed ($K_D = 0$).

Integration of the van't Hoff equation yields the following relationship between the mole fraction of impurity and the melting-point depression:

$$X_2 = \frac{(T_o - T_m)\Delta H_f}{RT_o^2} \qquad (2)$$

in which T_o = melting point of the pure compound, in kelvins, and T_m = melting point of the test specimen, in kelvins.

With no solid solution formation, the concentration of impurity in the liquid phase at any temperature during the melting is inversely proportional to the fraction melted at that temperature, and the melting-point depression is directly proportional to the mole fraction of impurity. A plot of the observed test specimen temperature, T_s, versus the reciprocal of the fraction melted, 1/F, at temperature T_s, should yield a straight line with the slope equal to the melting-point depression ($T_o - T_m$). The theoretical melting point of the pure compound is obtained by extrapolation to 1/F = 0:

$$T_S = T_o - \frac{RT_o^2 X_2 \left(\frac{1}{F}\right)}{\Delta H_f} \quad (3)$$

Substituting the experimentally obtained values for $T_o - T_m$, ΔH_f, and T_o in equation (2) yields the mole fraction of the total eutectic impurity, which, when multiplied by 100, gives the mole percentage of total eutectic impurities.

Deviations from the theoretical linear plot also may be due to solid solution formation ($K_D \neq 0$), so that care must be taken in interpreting the data.

To observe the linear effect of the impurity concentration on the melting-point depression, the impurity must be *soluble* in the liquid phase or melt of the compound, but *insoluble* in the solid phase, i.e., no solid solutions are formed. Some chemical similarities are necessary for solubility in the melt. For example, the presence of ionic compounds in neutral organic compounds and the occurrence of thermal decomposition may not be reflected in purity estimates. The extent of these theoretical limitations has been only partially explored.

Impurities present from the synthetic route often are similar to the end product, hence there usually is no problem of solubility in the melt. Impurities consisting of molecules of the same shape, size, and character as those of the major component can fit into the matrix of the major component without disruption of the lattice, forming solid solutions or inclusions; such impurities are not detectable by DSC. Purity estimates are too high in such cases. This is more common with less-ordered crystals as indicated by low heats of fusion.

In addition, the method is reliable when the purity of the major component is greater than 98.5 mol% and the materials are not decomposed during the melting phase.

Impurity levels calculated from thermograms are reproducible and generally reliable within 0.1% for ideal compounds.

Compounds that exist in polymorphic form cannot be used in purity determination unless the compound is completely converted to one form. On the other hand, DSC and DTA are inherently useful for detecting, and therefore monitoring, polymorphism.

Procedure

The actual procedure and the calculations to be employed for eutectic impurity analysis are dependent on the particular instrument used. Consult the manufacturer's literature and/or the thermal analysis literature for the most appropriate technique for a given instrument. In any event, it is imperative to keep in mind the limitations of solid solution formation, insolubility in the melt, polymorphism, and decomposition during the analysis.

⟨905⟩ UNIFORMITY OF DOSAGE UNITS

This general chapter is harmonized with the corresponding texts of the *European Pharmacopeia* and the *Japanese Pharmacopeia*. Portions of the general chapter text that are national *USP* text, and are not part of the harmonized text, are marked with symbols (⁺⁺) to specify this fact.

⁺NOTE—In this chapter, *unit* and *dosage unit* are synonymous.⁺

To ensure the consistency of dosage units, each unit in a batch should have a drug substance content within a narrow range around the label claim. Dosage units are defined as dosage forms containing a single dose or a part of a dose of drug substance in each unit. The uniformity of dosage units specification is not intended to apply to suspensions, emulsions, or gels in unit-dose containers intended for external, cutaneous administration.

The term "uniformity of dosage unit" is defined as the degree of uniformity in the amount of the drug substance among dosage units. Therefore, the requirements of this chapter apply to each drug substance being comprised in dosage units containing one or more drug substances, unless otherwise specified elsewhere in this Pharmacopeia.

The uniformity of dosage units can be demonstrated by either of two methods, *Content Uniformity* or ⁺*Weight*⁺ *Variation* (see *Table 1*). The test for *Content Uniformity* of preparations presented in dosage units is based on the assay of the individual content of drug substance(s) in a number of dosage units to determine whether the individual content is within the limits set. The *Content Uniformity* method may be applied in all cases.

The test for ⁺*Weight*⁺ *Variation* is applicable for the following dosage forms:

(W1)	Solutions enclosed in unit-dose containers and into soft capsules;

(W2)	Solids (including powders, granules, and sterile solids) that are packaged in single-unit containers and contain no active or inactive added substances;
(W3)	Solids (including sterile solids) that are packaged in single-unit containers, with or without active or inactive added substances, that have been prepared from true solutions and freeze-dried in the final containers and are labeled to indicate this method of preparation; and
(W4)	Hard capsules, uncoated tablets, or film-coated tablets, containing 25 mg or more of a drug substance comprising 25% or more, by weight, of the dosage unit or, in the case of hard capsules, the capsule contents, except that uniformity of other drug substances present in lesser proportions is demonstrated by meeting the requirements for *Content Uniformity*.

The test for *Content Uniformity* is required for all dosage forms not meeting the above conditions for the •*Weight*• *Variation* test.[1]

Table 1. Application of Content Uniformity (CU) and Weight Variation (WV) Tests for Dosage Forms

Dosage Form	Type	Subtype	Dose & Ratio of Drug Substance	
			≥25 mg and ≥25%	<25 mg or <25%
Tablets	Uncoated		WV	CU
	Coated	Film	WV	CU
		Others	CU	CU
Capsules	Hard		WV	CU
	Soft	Suspension, emulsion, or gel	CU	CU
		Solutions	WV	WV
Solids in single-unit containers	Single component		WV	WV
	Multiple components	Solution freeze-dried in final container	WV	WV
		Others	CU	CU
Solutions in unit-dose containers •and into soft capsules•			WV	WV
Others			CU	CU

CONTENT UNIFORMITY

Select not fewer than 30 units, and proceed as follows for the dosage form designated.

Where different procedures are used for assay of the preparation and for the *Content Uniformity* test, it may be necessary to establish a correction factor to be applied to the results of the latter.

Solid Dosage Forms

Assay 10 units individually using an appropriate analytical method. Calculate the acceptance value (see *Table 2*).

Liquid or Semi-Solid Dosage Forms

Assay 10 units individually using an appropriate analytical method. Carry out the assay on the amount of well-mixed material that is removed from an individual container in conditions of normal use, and express the results as delivered dose. Calculate the acceptance value (see *Table 2*).

Calculation of Acceptance Value

Calculate the acceptance value by the formula:

$$|M-\overline{X}|+ks$$

in which the terms are as defined in *Table 2*.

[1] •European Pharmacopoeia and Japanese Pharmacopoeia text not accepted by the United States Pharmacopeia: Alternatively, products listed in item (4) above that do not meet the 25 mg/25% threshold limit may be tested for uniformity of dosage units by Mass Variation instead of the Content Uniformity test if the concentration relative standard deviation (RSD) of the drug substance in the final dosage units is not more than 2%, based on process validation data and development data, and if there has been regulatory approval of such a change. The concentration RSD is the RSD of the concentration per dosage unit (w/w or w/v), where concentration per dosage unit equals the assay result per dosage unit divided by the individual dosage unit weight. See the RSD formula in *Table 2*.•

Table 2

Variable	Definition	Conditions	Value
$\overline{X}$	Mean of individual contents (χ_1, χ_2, …, χ_n), expressed as a percentage of the label claim		
$\chi_1, \chi_2, \ldots, \chi_n$	Individual contents of the units tested, expressed as a percentage of the label claim		
n	Sample size (number of units in a sample)		
k	Acceptability constant	If n = 10, then k =	2.4
		If n = 30, then k =	2.0
s	Sample standard deviation		$\left[\frac{\sum_{i=1}^{n}(\chi_i - \overline{X})^2}{n-1}\right]^{\frac{1}{2}}$
RSD	Relative standard deviation (the sample standard deviation expressed as a percentage of the mean)		$100s/\overline{X}$
M (case 1) to be applied when T ≤101.5	Reference value	If 98.5% ≤$\overline{X}$ ≤101.5%, then	M = $\overline{X}$ (AV = ks)
		If $\overline{X}$ <98.5%, then	M = 98.5% (AV = 98.5 − $\overline{X}$ + ks)
		If $\overline{X}$ >101.5%, then	M = 101.5% (AV = $\overline{X}$ − 101.5 + ks)
M (case 2) to be applied when T >101.5	Reference value	If 98.5 ≤$\overline{X}$ ≤T, then	M = $\overline{X}$ (AV = ks)
		If $\overline{X}$ <98.5%, then	M = 98.5% (AV = 98.5 − $\overline{X}$ + ks)
		If $\overline{X}$ >T, then	M = T% (AV = $\overline{X}$ − T + ks)
Acceptance value (AV)			General formula: $\lvert M - \overline{X}\rvert + ks$ (Calculations are specified above for the different cases.)
L1	Maximum allowed acceptance value		L1 = 15.0 unless otherwise specified
L2	Maximum allowed range for deviation of each dosage unit tested from the calculated value of M	On the low side, no dosage unit result can be less than [1− (0.01)(L2)]M, while on the high side, no dosage unit result can be greater than [1 + (0.01) (L2)]M. (This is based on an L2 value of 25.0.)	L2 = 25.0 unless otherwise specified
T	Target content per dosage unit at the time of manufacture, expressed as a percentage of the label claim. Unless otherwise stated, T is 100.0%, or T is the manufacturer's approved target content per dosage unit.		

•WEIGHT• VARIATION

Carry out an assay for the drug substance(s) on a representative sample of the batch using an appropriate analytical method. This value is result A, expressed as percentage of label claim (see *Calculation of Acceptance Value*). Assume that the concentration (weight of drug substance per weight of dosage unit) is uniform. Select not fewer than 30 dosage units, and proceed as follows for the dosage form designated.

Uncoated or Film-Coated Tablets

Accurately weigh 10 tablets individually. Calculate the content, expressed as percentage of label claim, of each tablet from the •weight• of the individual tablet and the result of the *Assay*. Calculate the acceptance value.

Hard Capsules

Accurately weigh 10 capsules individually, taking care to preserve the identity of each capsule. Remove the contents of each capsule by a suitable means. Accurately weigh the emptied shells individually, and calculate for each capsule the net •weight• of its contents by subtracting the •weight• of the shell from the respective gross •weight•. Calculate the drug substance content of each capsule from the •net weight• of the individual capsule •content• and the result of the *Assay*. Calculate the acceptance value.

Soft Capsules

Accurately weigh 10 intact capsules individually to obtain their gross •weights•, taking care to preserve the identity of each capsule. Then cut open the capsules by means of a suitable clean, dry cutting instrument such as scissors or a sharp open blade, and remove the contents by washing with a suitable solvent. Allow the occluded solvent to evaporate from the shells at room temperature over a period of about 30 minutes, taking precautions to avoid uptake or loss of moisture. Weigh the individual shells, and calculate the net contents. Calculate the drug substance content in each capsule from the •weight• of product removed from the individual capsules and the result of the *Assay*. Calculate the acceptance value.

Solid Dosage Forms Other Than Tablets and Capsules

Proceed as directed for *Hard Capsules*, treating each unit as described therein. Calculate the acceptance value.

Liquid Dosage Forms

Accurately weigh the amount of liquid that is removed from each of 10 individual containers in conditions of normal use. If necessary, compute the equivalent volume after determining the density. Calculate the drug substance content in each container from the mass of product removed from the individual containers and the result of the *Assay*. Calculate the acceptance value.

Calculation of Acceptance Value

Calculate the acceptance value as shown in *Content Uniformity*, except that the individual contents of the units are replaced with the individual estimated contents defined below.

$\chi_1, \chi_2, ..., \chi_n$	=	individual estimated contents of the units tested, where $\chi_i = w_i \times A/\overline{W}$
$w_1, w_2, ..., w_n$	=	individual •weights• of the units tested
A	=	content of drug substance (% of label claim) obtained using an appropriate analytical method
$\overline{W}$	=	mean of individual •weights• ($w_1, w_2, ..., w_n$)

CRITERIA

Apply the following criteria, unless otherwise specified.

Solid, Semi-Solid, and Liquid Dosage Forms

The requirements for dosage uniformity are met if the acceptance value of the first 10 dosage units is less than or equal to L1%. If the acceptance value is > L1%, test the next 20 units, and calculate the acceptance value. The requirements are met if the final acceptance value of the 30 dosage units is ≤ L1%, and no individual content of •any• dosage unit is less than [1 − (0.01)(L2)]M nor more than [1 + (0.01)(L2)]M •as specified• in the *Calculation of Acceptance Value* under *Content Uniformity* or under •*Weight*• *Variation*. Unless otherwise specified, L1 is 15.0 and L2 is 25.0.

⟨911⟩ VISCOSITY—CAPILLARY METHODS

The following procedures are used to determine the viscosity of a Newtonian fluid, i.e., a fluid having a viscosity that is independent of the rate of shear. [NOTE—For additional information, see *Rheometry* ⟨1911⟩.]

- **METHOD I. SUSPENDED-LEVEL (OR UBBELOHDE-TYPE) CAPILLARY VISCOMETER**

Apparatus: The determination may be carried out with a suspended-level capillary viscometer (*Figure 1*).

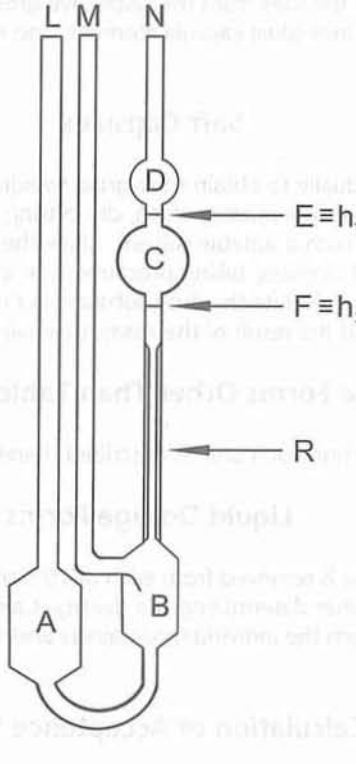

Figure 1. Suspended-level (or Ubbelohde-type) capillary viscometer.

Other viscometers may be used provided that the accuracy and precision is NLT that obtained with the viscometers described in this chapter.

Procedure: Fill the viscometer through tube (L) with a sufficient quantity of the sample liquid that is appropriate for the viscometer being used or by following the manufacturer's instructions. Carry out the experiment with the tube in a vertical position. Fill bulb (A) with the liquid, and also ensure that the level of liquid in bulb (B) is below the exit to the ventilation tube (M). Immerse the viscometer in a water or oil bath stabilized at the temperature specified in the individual monograph, and control the temperature to ±0.1°, unless otherwise specified in the individual monograph. Maintain the viscometer in a vertical position for a time period of NLT 30 min to allow the sample temperature to reach equilibrium. Close tube (M), and raise the level of the liquid in tube (N) to a level about 8 mm above mark ($E \equiv h_1$). Keep the liquid at this level by closing tube (N) and opening tube (M). Open tube (N), and measure the time required for the level of the liquid to drop from mark ($E \equiv h_1$) to mark ($F \equiv h_2$), using an appropriate accurate timing device. [NOTE—The minimum flow time should be 200 s.]

Calibration: Calibrate each viscometer at the test temperature by using fluids of known viscosities of appropriate viscosity standards to determine the viscometer constant, *k*. The viscosity values of the calibration standards should bracket the expected viscosity value of the sample liquid.

Calculate the viscometer constant, *k*, in mm²/s²:

$$k = \eta/(\rho \times t)$$

η	= known viscosity of the liquid (mPa · s)
ρ	= density of the liquid (g/mL)
t	= flow time for the liquid to pass from the upper mark to the lower mark (s)

Calculation of kinematic and Newtonian viscosities of sample fluid: A capillary viscometer is chosen so that the flow time, *t*, is NLT 200 s, and the kinematic energy correction is typically less than 1%. If the viscosity constant, *k*, is known, use the following equation to calculate the kinematic viscosity, *ν*, in mm^2/s, from the flow time, *t*, in s.

$$\nu = k \times t$$

If the density of the fluid is known at the temperature of the viscosity measurement, then the Newtonian viscosity, η, in mPa · s, is calculated:

$$\eta = \nu \times \rho$$

ρ = density of the fluid (g/mL)

The flow time of the fluid under examination is the mean of NLT three consecutive determinations. The result is valid if the percentage of the relative standard deviation (%RSD) for the three readings is NMT 2.0%.

- **METHOD II. SIMPLE U-TUBE (OR OSTWALD-TYPE) CAPILLARY VISCOMETER**

Apparatus: The determination may be carried out with a simple U-tube capillary viscometer (*Figure 2*).

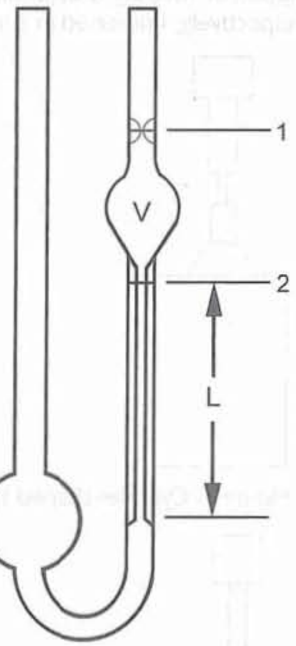

Figure 2. Simple U-tube (or Ostwald-type) capillary viscometer.

Variables and line numbers in *Figure 2* are defined as:

Line 1 = upper mark in the tube
V = given volume of fluid (m^3)
Line 2 = lower mark in the tube
L = capillary tube length (m)

Other viscometers, such as modified Ostwald-type capillary viscometers,[1] may be used provided that the accuracy and precision is NLT that obtained with the viscometers described in this chapter.

Procedure: Fill the tube with an amount of the sample that is appropriate for the viscometer being used or by following the manufacturer's instructions. The volume of fluid used should be such that the lower bulb is not entirely emptied when the fluid is drawn up through the capillary tube to the uppermost graduation mark. Carry out the experiment with the tube in a vertical position. Immerse the viscometer in a water or oil bath stabilized at the temperature specified in the individual monograph, and control the temperature to ±0.1°, unless otherwise specified in the individual monograph. Maintain the viscometer in a vertical position for a time period of NLT 30 min to allow the sample temperature to reach equilibrium. Using suction, draw the fluid up through the capillary tube until the meniscus is at the level of the uppermost graduation. With both the filling and capillary tubes open to atmospheric pressure, record the time, in s, required for the liquid to flow from the upper mark to the lower mark in the capillary tube. [NOTE—The minimum flow time should be 200 s.]

[1] For example, the Cannon-Fenske capillary viscometer is one of the simple U-tube capillary viscometers and is also called a modified Ostwald-type capillary viscometer.

General Chapters

Calibration and **Calculation of kinematic and Newtonian viscosities of sample fluid:** Proceed as directed in *Method I*. For certain simple U-tube capillary viscometers, determine the viscometer constant at the same temperature as the sample liquid under test.

⟨912⟩ VISCOSITY—ROTATIONAL METHODS

The principle of the method is to measure the force (torque) acting on a rotor when it rotates at a constant angular velocity or rotational speed in a liquid. Rotational rheometers/viscometers are used for measuring the viscosity of fluids, both Newtonian and non-Newtonian. The following procedures are used to determine the viscosity of Newtonian fluids or the apparent viscosity of non-Newtonian fluids. The calculated viscosity of Newtonian fluids should be the same (within experimental error), regardless of the rate of shear (or rotational speed). Given the dependence of viscosity on temperature, the temperature of the substance being measured should be controlled to within ±0.1°, unless otherwise specified in the individual monograph. [NOTE—For additional information, see *Rheometry* ⟨1911⟩.]

- **METHOD I. SPINDLE VISCOMETERS**

Apparatus: In the spindle viscometer, the apparent viscosity is determined by rotating a cylinder- or disk (or disc)-shaped spindle, as shown in *Figure 1* and *Figure 2*, respectively, immersed in a large volume of liquid.

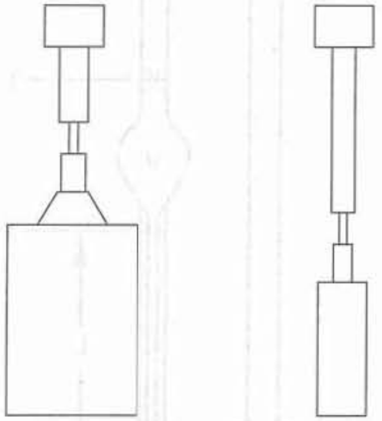

Figure 1. Cylinder-shaped spindles.

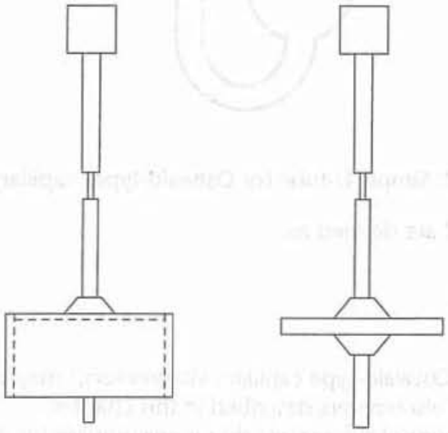

Figure 2. Disk-shaped spindles.

An absolute viscosity cannot be calculated due to the large gap between the spindle and the container wall, or the geometry of the spindle. The torque to maintain a given angular velocity does give a measure of the liquid resistance to flow but is often described as an apparent viscosity.

Other spindle type viscometers may be used provided that the accuracy and precision is NLT that obtained with the viscometers described in this chapter.

Procedure: When viscosity measurement is performed in a beaker or cup, as the shear rate is unknown, in order to enable reproducibility among labs that measure viscosity using different instrumentation, these parameters must be reported along with the measured viscosity:

1. Size and geometry of spindle
2. Angular velocity or rotational speed of the spindle

3. Temperature of the test substance

The spindle should be immersed to the recommended depth maintaining at least 1 cm clearance from the bottom and side of the container.

The preparation of the test specimen, including its temperature equilibration, is specified in each individual monograph. Follow the instrument manufacturer's recommendations regarding sample loading, spindle selection, and viscometer operation.

Calibration check: Check the calibration of a particular viscometer configuration at the test temperature using one or more fluids of known viscosities (Newtonian viscosity standards). The viscosity values of the calibration standards should bracket the expected viscosity value of the sample liquid. [NOTE—To help verify the linearity of the apparatus, it is suggested to perform measurements of a Newtonian viscosity standard at multiple rotational speeds at the test temperature.]

A viscometer is deemed to be calibrated if the measured apparent viscosities are within ±5% of the stated values.

Generally, calibration, operation, and cleaning of the viscometer should be performed according to the recommendations of the instrument manufacturer.

• **METHOD II. CONCENTRIC CYLINDER RHEOMETERS**

Apparatus: In the concentric cylinder rheometer, the apparent viscosity is determined by placing the liquid in the gap between the inner cylinder and the outer cylinder. Both controlled-stress and controlled-rate rotational rheometers are available commercially in configurations with absolute geometries (e.g., very small annular gaps between concentric cylinders) that allow calculation of apparent viscosities for non-Newtonian fluids. Controlled shear stress rheometers measure the shear rates resulting from the application of a given force or torque (the stress). Controlled shear rate rheometers measure the shear stress (from the torque on the rotor axis) resulting from a given shear rate (or rotational speed). Concentric cylinder rotational rheometers are sometimes referred to as cup-and-bob rheometers. These rheometers involve an additional design consideration depending on whether the outer cylinder (the cup) or the inner cylinder (the bob) rotates. Rotating-cup rheometers are called Couette systems, while rotating-bob rheometers are called Searle systems, as shown in *Figure 3* and *Figure 4*, respectively.

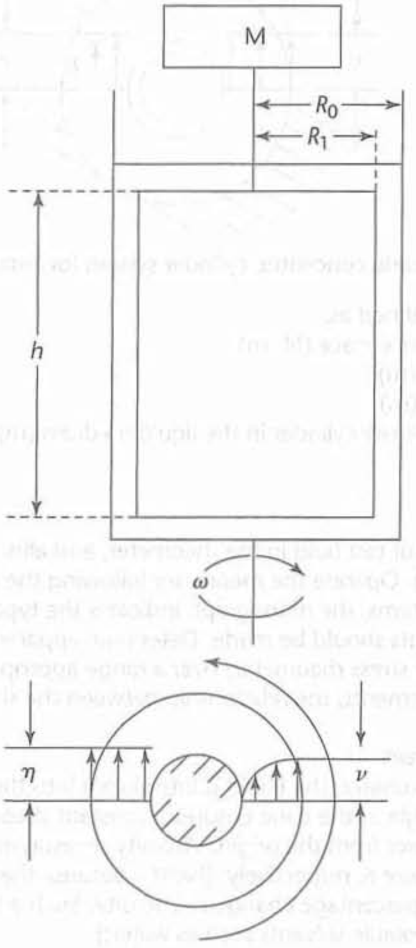

Figure 3. Couette concentric cylinder system for rotational rheometry.

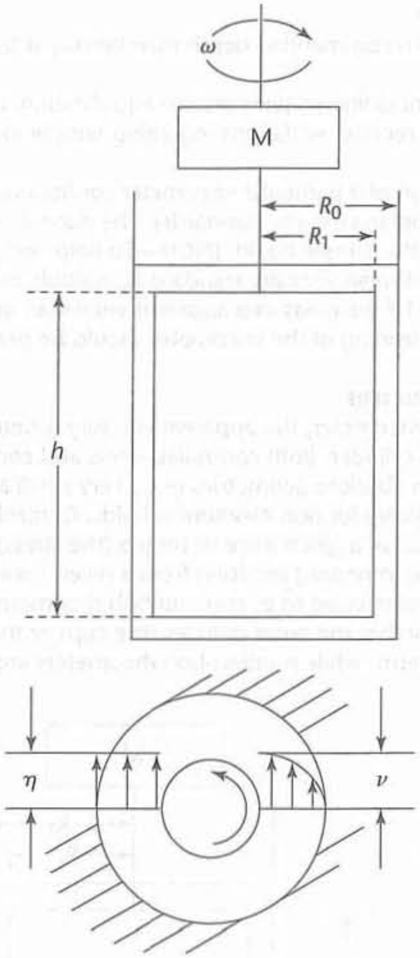

Figure 4. Searle concentric cylinder system for rotational rheometry.

Variables in *Figure 3* and *Figure 4* are defined as:

M	= torque acting on the cylinder surface (N · m)
R_0	= radius of the outer cylinder (m)
R_1	= radius of the inner cylinder (m)
h	= height of immersion of the inner cylinder in the liquid medium (m)
ω	= angular velocity (radians/s)
η	= viscosity (Pa · s)
v	= velocity (m/s)

Procedure: Place a sufficient quantity of test fluid in the rheometer, and allow the sample to reach thermal equilibrium, as indicated in the individual monograph. Operate the rheometer following the procedure recommended by the instrument manufacturer. For non-Newtonian systems, the monograph indicates the type of rheometer that should be used and the shear rate(s) at which the measurements should be made. Determine apparent viscosities by changing the shear rate (or shear stress, if using a controlled shear stress rheometer) over a range appropriate to the use of the material under test. From a series of such viscosity measurements, the relationship between the shear rate and the shear stress of a non-Newtonian liquid can be obtained.

• **METHOD III. CONE-AND-PLATE RHEOMETERS**

Apparatus: In the cone-and-plate rheometer, the liquid is introduced into the fixed gap between a flat disk or plate and a cone forming a defined angle. The angle of the cone ensures a constant shear rate due to the increase in both the gap and the linear speed as the distance increases from the origin. Viscosity measurement can be performed by rotating the cone or the plate, as shown in *Figure 5* and *Figure 6*, respectively. [NOTE—Because the volume of sample is small, even a small absolute loss of solvents can cause a large percentage change in viscosity. Such a loss is particularly relevant for volatile solvents but could be significant even for nonvolatile solvents such as water.]

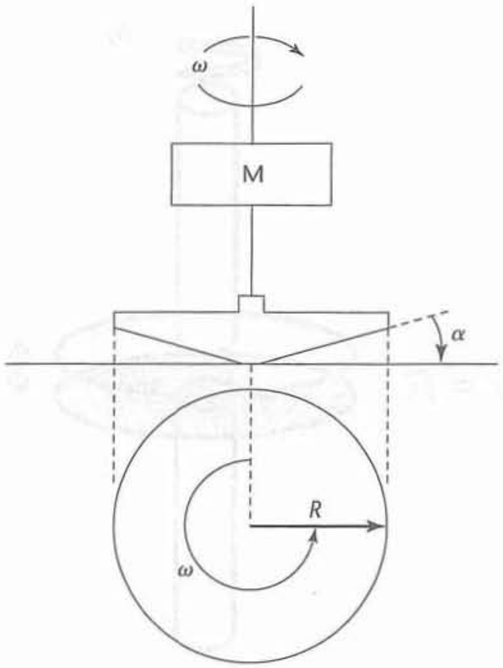

Figure 5. Cone-and-plate rotational rheometer with rotating cone.

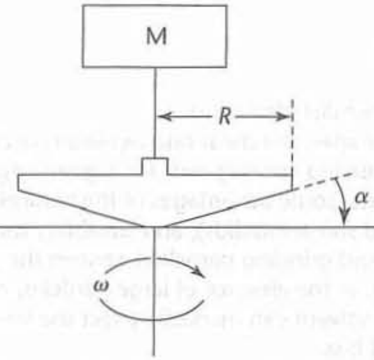

Figure 6. Cone-and-plate rotational rheometer with rotating plate.

Variables in *Figure 5* and *Figure 6* are defined as:

ω	= angular velocity (radians/s)
M	= torque acting on the flat plate or cone surface (N · m)
α	= angle between the flat plate and cone (radians)
R	= radius of the cone (m)

Procedure: Proceed as directed for *Method II. Concentric Cylinder Rheometers*.

• **Method IV. Parallel Plate (or Parallel Disk) Rheometers**

Apparatus: Parallel plate rheometers are similar to cone-and-plate rheometers except that the sample to be measured is introduced into the gap between a flat plate or disk (or disc) and another parallel flat plate or disk. Measurements are made typically with the lower plate or disk remaining stationary as the upper plate or disk is rotated at a constant angular velocity, ω (*Figure 7*).

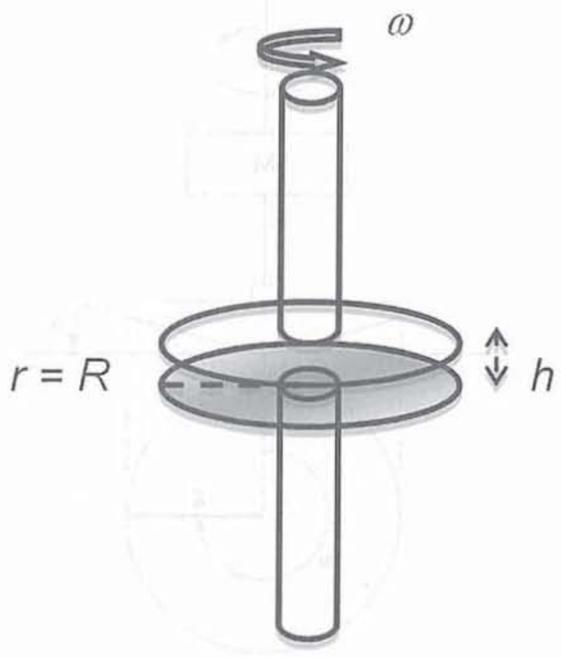

Figure 7. Parallel plate rotational rheometer.

Variables in *Figure 7* are defined as:
ω = angular velocity (radians/s)
R = radius of the plate (m)
h = distance between the two parallel plates (m)

In contrast to the cone-and-plate rheometer, the shear rate between parallel plates increases with distance from the origin of the axis of rotation due to the increasing linear speeds for a given angular velocity with a constant gap. Thus, an average shear rate is obtained. Nonetheless, some advantages of the parallel plate rheometer include ease of sample loading (especially for very viscous liquids and soft semisolids), and suitability for suspensions of particulates. For suspensions, the gap should be set high enough to avoid grinding particles between the plates. Parallel plates have a user-definable gap (within practical limits) and therefore, in the absence of large particles, may be used at narrower gaps. As with cone-and-plate rheometers, evaporative loss of solvent can markedly affect the viscosity of the sample, so adequate precautions need to be taken to minimize solvent loss.

Procedure: Proceed as directed for *Method II. Concentric Cylinder Rheometers*.

⟨913⟩ VISCOSITY—ROLLING BALL METHOD

The following procedure is used to determine the viscosity of a Newtonian fluid, i.e., a fluid having a viscosity that is independent of the shearing stress or rate of shear. [NOTE—For additional information, see *Rheometry* ⟨1911⟩.]

APPARATUS

See *Figure 1*.

The basic design of a rolling ball viscometer consists of a tube (or capillary) that contains the sample liquid under test and a ball chosen so that it will require a minimum rolling time of 20 s at the measuring angle in the sample liquid.

General Chapters

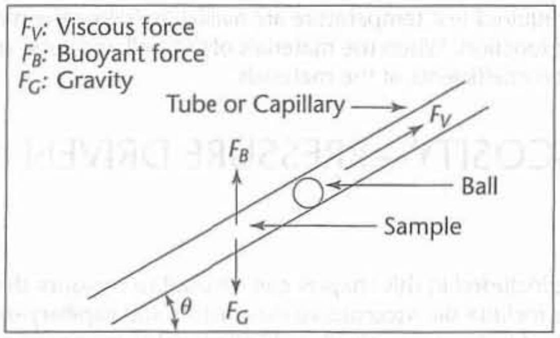

Figure 1. Basic design for rolling ball viscometer.

MEASURING PRINCIPLE

The rolling ball measurement is based on Stokes's Law, as influenced by the angle of inclination of the tube (or capillary). Calculate the Newtonian viscosity, η, in mPa · s:

$$\eta = [(\rho_1 - \rho_2) \times g \times r^2 \times \sin\theta]/v_\infty$$

ρ_1 = density of the ball used (g/mL)
ρ_2 = density of the sample liquid (g/mL)
g = gravitational constant (mm/s^2)
r = radius of the ball (mm)
θ = angle of inclination of the tube (or capillary)
v_∞ = terminal velocity of the ball (mm/s)

Determine the viscosity of a liquid by observing the rolling time of a solid sphere (ball) under the influence of gravity in an inclined cylindrical tube filled with the sample liquid. Measure the time taken by the ball to travel the fixed distance between two ring marks or measuring sensors. For each single measured rolling time, the resulting viscosity can be expressed as dynamic viscosity (mPa · s) as well as kinematic viscosity (mm^2/s) for a sample of known density.

PROCEDURE

Select a measuring system [tube (or capillary) and ball combination] within the anticipated range of viscosity of the sample liquid. As necessary, heat the clean and dry tube and ball of the viscometer to the temperature specified in the individual monograph, and control the temperature to ±0.1°, unless otherwise specified in the individual monograph. Select a measuring angle to obtain a minimum rolling time of 20 s. Fill the tube with the sample liquid, being careful to avoid bubble formation. Close the tube, and insert it in the instrument. Allow to equilibrate at the specified temperature for NLT 15 min for a rolling ball viscometer with a tube of large diameter. For a micro rolling ball viscometer, follow the instrument manufacturer's instructions regarding temperature equilibration. Release the ball, and record the time required for the ball to roll from the upper to the lower ring mark (or measuring sensor). Repeat the test run at least four times.

The rolling time in the fluid under examination is the mean of NLT four consecutive determinations. The result is valid if the percent relative standard deviation (%RSD) for the four readings is NMT 2.0%.

CALCULATION AND CALIBRATION

Calculate the Newtonian viscosity, η, in mPa · s:

$$\eta = k \times (\rho_1 - \rho_2) \times t$$

k = calibration constant of the instrument (mm^2/s^2) at a specified measuring angle and temperature
ρ_1 = density of the ball used (g/mL)
ρ_2 = density of the sample liquid (g/mL)
t = rolling time of the ball (s)

Calibrate each tube (or capillary) and ball combination at the test temperature and test angle using fluids of known viscosities and densities (viscosity standards) to determine the measuring system constant, k. [NOTE—Some automated viscometers use a polynomial function to determine the calibration for different angles and temperatures.] The viscosity values of the calibration standards should bracket the expected viscosity value of the sample liquid.

Calibrations are specific to the ball radius, ball density, temperature, and test angle. Recalibration is necessary when any of these parameters is changed.

Where no reference values at the required test temperature are available, follow the manufacturer's instructions for mathematical corrections to the calibration function. When the materials of the ball and tube are dissimilar, apply corrections calculated using the linear thermal expansion coefficients of the materials.

〈914〉 VISCOSITY—PRESSURE DRIVEN METHODS

INTRODUCTION

The viscometers/rheometers that are included in this chapter can be used to measure the viscosity of both Newtonian and non-Newtonian fluids. The devices include slit viscometers/rheometers and capillary-extrusion viscometers.

Capillary viscometers that are described in *Viscosity—Capillary Methods* 〈911〉 are based on the principle that the flow is driven by gravity, and these viscometers can be classified under one of the pressure driven methods. However, limitations of glass capillary viscometers render them inherently unsuitable for use in characterizing non-Newtonian fluids, and their use in measurements of high-viscosity fluids is impractical as well. Chapter 〈914〉 does not address such viscometers.

[NOTE—For additional information, see *Rheometry* 〈1911〉.]

- **METHOD I. SLIT VISCOMETERS/RHEOMETERS**

Apparatus: See *Figure 1*.

The basic design of a slit viscometer/rheometer consists of a rectangular, slit channel with a uniform cross-sectional area. A test liquid is pumped at a constant flow rate through this channel. Multiple pressure sensors that are flush mounted at linear distances along the streamwise direction measure the pressure drop, as depicted in *Figure 1*.

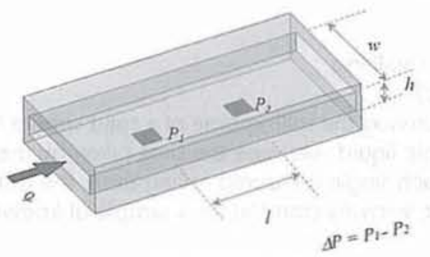

Figure 1. Basic design of the slit viscometer/rheometer.

Measuring principle: The slit viscometer/rheometer is based on the fundamental principle that a viscous liquid resists flow, exhibiting a decreasing pressure along the length of the slit. The pressure decrease or drop (ΔP) is correlated with the shear stress at the wall boundary. The apparent shear rate is directly related to the flow rate and the dimension of the slit. The apparent shear rate ($\dot{\gamma}_a$), the shear stress (σ), and the apparent viscosity (η_a), respectively, are calculated as follows:

$$\dot{\gamma}_a = \frac{6 \times Q}{w \times h^2}$$

$$\sigma = \frac{h \times w}{2 \times (w + h)} \times \frac{\Delta P}{l}$$

$$\eta_a = \frac{\sigma}{\dot{\gamma}_a}$$

$\dot{\gamma}_a$	= apparent shear rate (s^{-1})
Q	= flow rate (µL/s)
w	= width of the flow channel (mm)
h	= depth of the flow channel (mm)
σ	= shear stress (Pa)
ΔP	= pressure difference between the leading pressure sensor and the last pressure sensor (Pa)
l	= distance between the leading pressure sensor and the last pressure sensor (mm)
η_a	= apparent viscosity (Pa · s)

To determine the viscosity of a liquid, pump the liquid sample through the slit channel at a constant flow rate and measure the pressure drop. Using the equations shown above, calculate the apparent viscosity for the apparent shear rate. For a Newtonian liquid, the apparent viscosity is the same as the true viscosity, and the single shear-rate measurement is sufficient. For non-Newtonian liquids, the apparent viscosity is not true viscosity. To obtain true viscosity, measure the appa-

rent viscosities at multiple apparent shear rates. Calculate true viscosities, η, at various shear rates using the Weissenberg–Rabinowitsch–Mooney correction factor:

$$\frac{1}{\eta} = \frac{1}{2 \times \eta_a} \times \left(2 + \frac{d \ln \dot{\gamma}_a}{d \ln \sigma}\right)$$

The calculated true viscosity should be the same as the value that is obtained using a cone-and-plate rheometer at the same shear rate.

Procedure: Select slit dimensions and full-scale pressure of pressure sensors to attain the desired range of viscosity and shear rates. With a syringe pump to control the flow rate—or interchangeably, the shear rate—load a test sample into a glass syringe. As necessary, control the temperature of the sample with the syringe and the slit viscometer specified in the individual procedure to ±0.1°, unless otherwise specified. Allow to equilibrate at the specified temperature for about 3–5 min. Set each pressure sensor to zero. Select the first flow rate or shear rate. Pump the sample at the flow rate, and measure the pressure readings once the steady-state values are reached. Increase the flow rate (or shear rate) until the pressure reading of the leading sensor is >5% of the full-scale value. Take the average of each pressure sensor over time, and calculate the pressure drops. Calculate the apparent viscosity. If required for the procedure, repeat the measurements four times. If the test sample is non-Newtonian, vary the shear rate and calculate the corresponding apparent viscosities.

Calculation and calibration: Calculate the apparent viscosity by dividing the shear stress by the apparent shear rate. For non-Newtonian liquids, apply the Weissenberg–Rabinowitsch–Mooney corrections to obtain the true viscosity curve. Commercial viscometers are provided with a built-in correction.

Calibrate individual pressure sensors by following the recommendations from the manufacturer. The slit viscometer, however, can be calibrated with a Newtonian standard of known viscosity. Choose a standard that covers the viscosity range of interest for the selected slit and pressure sensors. Measure the viscosities at shear rates for 10%, 50%, and 90% of full scale of the leading pressure sensor, and take the average. Calculate a constant (k) for the ratio of the reference value (η_{ref}) to the measured value (η_{meas}) and record.

$$k = \frac{\eta_{ref}}{\eta_{meas}}$$

η_{ref} = reference viscosity (Pa · s)
η_{meas} = measured viscosity (Pa · s)

Multiply new viscosity data by k, because the value of k will correct for the uncertainty and variation of the slit geometry. Ideally, the value of k should remain constant within a temperature change of 100°. If the k value varies by >1%, consult with the manufacturer regarding the temperature compensation of the pressure sensors.

⟨921⟩ WATER DETERMINATION

Many Pharmacopeial articles either are hydrates or contain water in adsorbed form. As a result, the determination of the water content is important in demonstrating compliance with the Pharmacopeial standards. Generally one of the methods given below is called for in the individual monograph, depending upon the nature of the article. In rare cases, a choice is allowed between two methods. When the article contains water of hydration, *Method I (Titrimetric), Method II (Azeotropic),* or *Method III (Gravimetric)* is employed, as directed in the individual monograph, and the requirement is given under the heading *Water.*

The heading *Loss on Drying* (see *Loss on Drying* ⟨731⟩) is used in those cases where the loss sustained on heating may be not entirely water.

METHOD I (TITRIMETRIC)

Determine the water by *Method Ia,* unless otherwise specified in the individual monograph.

Method Ia (Direct Titration)

PRINCIPLE

The titrimetric determination of water is based upon the quantitative reaction of water with an anhydrous solution of sulfur dioxide and iodine in the presence of a buffer that reacts with hydrogen ions.

In the original titrimetric solution, known as Karl Fischer Reagent, the sulfur dioxide and iodine are dissolved in pyridine and methanol. The test specimen may be titrated with the *Reagent* directly, or the analysis may be carried out by a residual titration procedure. The stoichiometry of the reaction is not exact, and the reproducibility of a determination depends upon such

factors as the relative concentrations of the *Reagent* ingredients, the nature of the inert solvent used to dissolve the test specimen, and the technique used in the particular determination. Therefore, an empirically standardized technique is used in order to achieve the desired accuracy. Precision in the method is governed largely by the extent to which atmospheric moisture is excluded from the system. The titration of water is usually carried out with the use of anhydrous methanol as the solvent for the test specimen. In some cases, other suitable solvents may be used for special or unusual test specimens. In these cases, the addition of at least 20% of methanol or other primary alcohol is recommended.

APPARATUS

Any apparatus may be used that provides for adequate exclusion of atmospheric moisture and determination of the endpoint. In the case of a colorless solution that is titrated directly, the endpoint may be observed visually as a change in color from canary yellow to amber. The reverse is observed in the case of a test specimen that is titrated residually. More commonly, however, the endpoint is determined electrometrically with an apparatus employing a simple electrical circuit that serves to impress about 200 mV of applied potential between a pair of platinum electrodes immersed in the solution to be titrated. At the endpoint of the titration a slight excess of the reagent increases the flow of current to between 50 and 150 microamperes for 30 s to 30 min, depending upon the solution being titrated. The time is shortest for substances that dissolve in the reagent. With some automatic titrators, the abrupt change in current or potential at the endpoint serves to close a solenoid-operated valve that controls the buret delivering the titrant. Commercially available apparatus generally comprises a closed system consisting of one or two automatic burets and a tightly covered titration vessel fitted with the necessary electrodes and a magnetic stirrer. The air in the system is kept dry with a suitable desiccant, and the titration vessel may be purged by means of a stream of dry nitrogen or current of dry air.

REAGENT

Prepare the Karl Fischer Reagent as follows. Add 125 g of iodine to a solution containing 670 mL of methanol and 170 mL of pyridine, and cool. Place 100 mL of pyridine in a 250-mL graduated cylinder, and, keeping the pyridine cold in an ice bath, pass in dry sulfur dioxide until the volume reaches 200 mL. Slowly add this solution, with shaking, to the cooled iodine mixture. Shake to dissolve the iodine, transfer the solution to the apparatus, and allow the solution to stand overnight before standardizing. One mL of this solution when freshly prepared is equivalent to approximately 5 mg of water, but it deteriorates gradually; therefore, standardize it within 1 h before use, or daily if in continuous use. Protect from light while in use. Store any bulk stock of the reagent in a suitably sealed, glass-stoppered container, fully protected from light, and under refrigeration. For determination of trace amounts of water (less than 1%), it is preferable to use a *Reagent* with a water equivalency factor of not more than 2.0, which will lead to the consumption of a more significant volume of titrant.

A commercially available, stabilized solution of Karl Fischer type reagent may be used. Commercially available reagents containing solvents or bases other than pyridine or alcohols other than methanol may be used also. These may be single solutions or reagents formed in situ by combining the components of the reagents present in two discrete solutions. The diluted *Reagent* called for in some monographs should be diluted as directed by the manufacturer. Either methanol or other suitable solvent, such as ethylene glycol monomethyl ether, may be used as the diluent.

TEST PREPARATION

Unless otherwise specified in the individual monograph, use an accurately weighed or measured amount of the specimen under test estimated to contain 2–250 mg of water. The amount of water depends on the water equivalency factor of the *Reagent* and on the method of endpoint determination. In most cases, the minimum amount of specimen, in mg, can be estimated using the formula:

$$FCV/KF$$

in which F is the water equivalency factor of the *Reagent,* in mg per mL; C is the used volume, in percent, of the capacity of the buret; V is the buret volume, in mL; and KF is the limit or reasonable expected water content in the sample, in percent. C is generally between 30% and 100% for manual titration, and between 10% and 100% for the instrumental method endpoint determination. [NOTE—It is recommended that the product of FCV be greater than or equal to 200 for the calculation to ensure that the minimum amount of water titrated is greater than or equal to 2 mg.]

Where the specimen under test is an aerosol with propellant, store it in a freezer for not less than 2 h, open the container, and test 10.0 mL of the well-mixed specimen. In titrating the specimen, determine the endpoint at a temperature of 10° or higher.

Where the specimen under test is capsules, use a portion of the mixed contents of not fewer than four capsules.

Where the specimen under test is tablets, use powder from not fewer than four tablets ground to a fine powder in an atmosphere of temperature and relative humidity known not to influence the results.

Where the monograph specifies that the specimen under test is hygroscopic, take an accurately weighed portion of the solid into the titration vessel, proceeding as soon as possible and taking care to avoid moisture uptake from the atmosphere. If the

sample is constituted by a finite amount of solid as a lyophilized product or a powder inside a vial, use a dry syringe to inject an appropriate volume of methanol, or other suitable solvent, accurately measured, into a tared container, and shake to dissolve the specimen. Using the same syringe, remove the solution from the container and transfer it to a titration vessel prepared as directed for *Procedure.* Repeat the procedure with a second portion of methanol, or other suitable solvent, accurately measured, add this washing to the titration vessel, and immediately titrate. Determine the water content, in mg, of a portion of solvent of the same total volume as that used to dissolve the specimen and to wash the container and syringe, as directed for *Standardization of Water Solution for Residual Titration,* and subtract this value from the water content, in mg, obtained in the titration of the specimen under test. Dry the container and its closure at 100° for 3 h, allow to cool in a desiccator, and weigh. Determine the weight of specimen tested from the difference in weight from the initial weight of the container.

When appropriate, the water may be desorbed or released from the sample by heat in an external oven connected with the vessel, to where it is transferred with the aid of an inert and dried gas such as pure nitrogen. Any drift due to the transport gas should be considered and corrected. Care should be taken in the selection of the heating conditions to avoid the formation of water coming from dehydration due to decomposition of the sample constituents, which may invalidate this approach.

STANDARDIZATION OF THE REAGENT

Place enough methanol or other suitable solvent in the titration vessel to cover the electrodes, and add sufficient *Reagent* to give the characteristic endpoint color, or 100 ± 50 microamperes of direct current at about 200 mV of applied potential.

Purified Water, sodium tartrate dihydrate, a USP Reference Standard, or commercial standards with a certificate of analysis traceable to a national standard may be used to standardize the *Reagent.* The reagent equivalency factor, the recommended titration volume, buret size, and amount of standard to measure are factors to consider when deciding which standard and how much to use.[1] For *Purified Water* or water standards, quickly add the equivalent of between 2 and 250 mg of water. Calculate the water equivalency factor, *F,* in mg of water per mL of reagent:

$$W/V$$

in which *W* is the weight, in mg, of the water contained in the aliquot of standard used; and *V* is the volume, in mL, of the *Reagent* used in the titration. For sodium tartrate dihydrate, quickly add 20–125 mg of sodium tartrate dihydrate ($C_4H_4Na_2O_6 \cdot 2H_2O$), accurately weighed by difference, and titrate to the endpoint. The water equivalence factor *F,* in mg of water per mL of reagent, is given by the formula:

$$W/V\,(36.04/230.08)$$

in which 36.04 is two times the molecular weight of water and 230.08 is the molecular weight of sodium tartrate dihydrate; *W* is the weight, in mg, of sodium tartrate dihydrate; and *V* is the volume, in mL, of the *Reagent* consumed in the second titration. Note that the solubility of sodium tartrate dihydrate in methanol is such that fresh methanol may be needed for additional titrations of the sodium tartrate dihydrate standard.

PROCEDURE

Unless otherwise specified, transfer enough methanol or other suitable solvent to the titration vessel, ensuring that the volume is sufficient to cover the electrodes (approximately 30–40 mL), and titrate with the *Reagent* to the electrometric or visual endpoint to consume any moisture that may be present. (Disregard the volume consumed, because it does not enter into the calculations.) Quickly add the *Test Preparation,* mix, and again titrate with the *Reagent* to the electrometric or visual endpoint. Calculate the water content of the specimen taken, in mg:

$$SF$$

in which *S* is the volume, in mL, of the *Reagent* consumed in the second titration; and *F* is the water equivalence factor of the *Reagent.*

Method Ib (Residual Titration)

PRINCIPLE

See the information given in the section *Principle* under *Method Ia.* In the residual titration, excess *Reagent* is added to the test specimen, sufficient time is allowed for the reaction to reach completion, and the unconsumed *Reagent* is titrated with a standard solution of water in a solvent such as methanol. The residual titration procedure is applicable generally and avoids the difficulties that may be encountered in the direct titration of substances from which the bound water is released slowly.

[1] Consider a setup in which the reagent equivalency factor is 5 mg/mL, and the buret volume is 5 mL and an instrumental endpoint. Standard amounts equivalent to between 2.5 mg and 22.5 mg of water (10%–90% of buret capacity) could be used based on the buret and the reagent equivalency factor. The upper end of this range would involve an excessive amount of sodium tartrate dihydrate. If *Purified Water* or a standard is weighed, an analytical balance appropriate to the amount weighed is required.

APPARATUS, REAGENT, AND TEST PREPARATION

Use *Method Ia.*

STANDARDIZATION OF WATER SOLUTION FOR RESIDUAL TITRATION

Prepare a *Water Solution* by diluting 2 mL of water with methanol or other suitable solvent to 1000 mL. Standardize this solution by titrating 25.0 mL with the *Reagent,* previously standardized as directed under *Standardization of the Reagent.* Calculate the water content, in mg per mL, of the *Water Solution* taken:

$$V'F/25$$

in which *V'* is the volume of the *Reagent* consumed, and *F* is the water equivalence factor of the *Reagent.* Determine the water content of the *Water Solution* weekly, and standardize the *Reagent* against it periodically as needed.

PROCEDURE

Where the individual monograph specifies that the water content is to be determined by *Method Ib,* transfer enough methanol or other suitable solvent to the titration vessel, ensuring that the volume is sufficient to cover the electrodes (approximately 30–40 mL), and titrate with the *Reagent* to the electrometric or visual endpoint. Quickly add the *Test Preparation,* mix, and add an accurately measured excess of the *Reagent.* Allow sufficient time for the reaction to reach completion, and titrate the unconsumed *Reagent* with standardized *Water Solution* to the electrometric or visual endpoint. Calculate the water content of the specimen, in mg, taken:

$$F(X' - XR)$$

in which *F* is the water equivalence factor of the *Reagent; X'* is the volume, in mL, of the *Reagent* added after introduction of the specimen; *X* is the volume, in mL, of standardized *Water Solution* required to neutralize the unconsumed *Reagent;* and *R* is the ratio, *V'*/25 (mL *Reagent*/mL *Water Solution*), determined from the *Standardization of Water Solution for Residual Titration.*

Method Ic (Coulometric Titration)

PRINCIPLE

The Karl Fischer reaction is used in the coulometric determination of water. Iodine, however, is not added in the form of a volumetric solution but is produced in an iodide-containing solution by anodic oxidation. The reaction cell usually consists of a large anode compartment and a small cathode compartment that are separated by a diaphragm. Other suitable types of reaction cells (e.g., without diaphragms) may also be used. Each compartment has a platinum electrode that conducts current through the cell. Iodine, which is produced at the anode electrode, immediately reacts with water present in the compartment. When all the water has been consumed, an excess of iodine occurs, which usually is detected electrometrically, thus indicating the endpoint. Moisture is eliminated from the system by pre-electrolysis. Changing the Karl Fischer solution after each determination is not necessary because individual determinations can be carried out in succession in the same reagent solution. A requirement for this method is that each component of the test specimen is compatible with the other components, and no side reactions take place. Samples are usually transferred into the vessel as solutions by means of injection through a septum. Gases can be introduced into the cell by means of a suitable gas inlet tube. Precision in the method is predominantly governed by the extent to which atmospheric moisture is excluded from the system; thus, the introduction of solids into the cell may require precautions, such as working in a glove-box in an atmosphere of dry inert gas. Control of the system may be monitored by measuring the amount of baseline drift, which does not preclude the need of any blank correction when used as a vehicle for sample introduction. This method is particularly suited to chemically inert substances like hydrocarbons, alcohols, and ethers. In comparison with the volumetric Karl Fischer titration, coulometry is a micro-method.

When appropriate, the water may be desorbed or released from the sample by heat in an external oven connected with the vessel, to where it is transferred with the aid of an inert and dried gas such as pure nitrogen. Any drift due to the transport gas should be considered and corrected. Care should be taken in the selection of the heating conditions to avoid the formation of water coming from dehydration due to decomposition of the sample constituents, which may invalidate this approach.

APPARATUS

Any commercially available apparatus consisting of an absolutely tight system fitted with the necessary electrodes and a magnetic stirrer is appropriate. The instrument's microprocessor controls the analytical procedure and displays the results. Calibration of the instrument is not necessary, as the current consumed can be measured absolutely.

REAGENT

See the manufacturer's recommendations.

TEST PREPARATION

Where the specimen is a soluble solid, an appropriate quantity, accurately weighed, may be dissolved in anhydrous methanol or other suitable solvents.

Where the specimen is an insoluble solid, an appropriate quantity, accurately weighed, may be extracted using a suitable anhydrous solvent, and may be injected into the anolyte solution. Alternatively, an evaporation technique may be used in which water is released and evaporated by heating the specimen in a tube in a stream of dry inert gas. The gas is then passed into the cell.

Where the specimen is to be used directly without dissolving in a suitable anhydrous solvent, an appropriate quantity, accurately weighed, may be introduced into the chamber directly.

Where the specimen is a liquid, and is miscible with anhydrous methanol or other suitable solvents, an appropriate quantity, accurately weighed, may be added to anhydrous methanol or other suitable solvents.

PROCEDURE

Using a dry device, inject or add directly an accurately measured amount of the sample or sample preparation estimated to contain between 0.5 and 5 mg of water, or an amount recommended by the instrument manufacturer into the anolyte, mix, and perform the coulometric titration to the electrometric endpoint. Read the water content of the liquid *Test Preparation* directly from the instrument's display, and calculate the percentage that is present in the substance. Perform a blank determination, as needed, and make any necessary corrections.

METHOD II (AZEOTROPIC—TOLUENE DISTILLATION)

Apparatus

Use a 500-mL glass flask A connected by means of a trap B to a reflux condenser C by ground glass joints (see *Figure 1*).

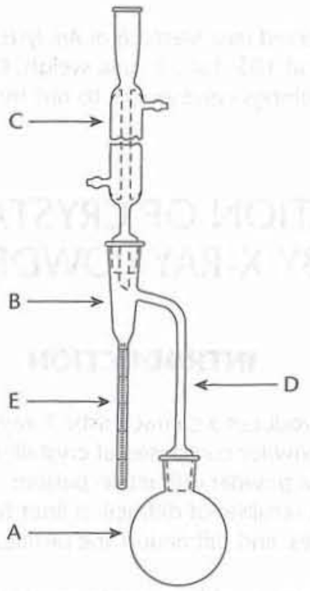

Figure 1. Toluene moisture apparatus.

The critical dimensions of the parts of the apparatus are as follows. The connecting tube D is 9–11 mm in internal diameter. The trap is 235–240 mm in length. The condenser, if of the straight-tube type, is approximately 400 mm in length and not less than 8 mm in bore diameter. The receiving tube E has a 5-mL capacity, and its cylindrical portion, 146–156 mm in length, is graduated in 0.1-mL subdivisions, so that the error of reading is not greater than 0.05 mL for any indicated volume. The source of heat is preferably an electric heater with rheostat control or an oil bath. The upper portion of the flask and the connecting tube may be insulated.

Clean the receiving tube and the condenser with a suitable cleanser, thoroughly rinse with water, and dry in an oven. Prepare the toluene to be used by first shaking with a small quantity of water, separating the excess water, and distilling the toluene.

Procedure

Place in the dry flask a quantity of the substance, weighed accurately to the nearest centigram, which is expected to yield 2–4 mL of water. If the substance is of a pasty character, weigh it in a boat of metal foil of a size that will just pass through the neck of the flask. If the substance is likely to cause bumping, add enough dry, washed sand to cover the bottom of the flask, or a number of capillary melting-point tubes, about 100 mm in length, sealed at the upper end. Place about 200 mL of toluene in the flask, connect the apparatus, and fill the receiving tube E with toluene poured through the top of the condenser. Heat the flask gently for 15 min and, when the toluene begins to boil, distill at the rate of about two drops per s until most of the water has passed over, then increase the rate of distillation to about four drops per s. When the water has apparently all distilled over, rinse the inside of the condenser tube with toluene while brushing down the tube with a tube brush attached to a copper wire and saturated with toluene. Continue the distillation for five min, then remove the heat, and allow the receiving tube to cool to room temperature. If any droplets of water adhere to the walls of the receiving tube, scrub them down with a brush consisting of a rubber band wrapped around a copper wire and wetted with toluene. When the water and toluene have separated completely, read the volume of water, and calculate the percentage that was present in the substance.

METHOD III (GRAVIMETRIC)

Procedure for Chemicals

Proceed as directed in the individual monograph preparing the chemical as directed under *Loss on Drying* ⟨731⟩.

Procedure for Biologics

Proceed as directed in the individual monograph.

Procedure for Articles of Botanical Origin

Place about 10 g of the drug, prepared as directed (see *Methods of Analysis* under *Articles of Botanical Origin* ⟨561⟩) and accurately weighed, in a tared evaporating dish. Dry at 105° for 5 h, and weigh. Continue the drying and weighing at 1-h intervals until the difference between two successive weighings corresponds to not more than 0.25%.

⟨941⟩ CHARACTERIZATION OF CRYSTALLINE AND PARTIALLY CRYSTALLINE SOLIDS BY X-RAY POWDER DIFFRACTION (XRPD)

INTRODUCTION

Every crystalline phase of a given substance produces a characteristic X-ray diffraction pattern. Diffraction patterns can be obtained from a randomly oriented crystalline powder composed of crystallites or crystal fragments of finite size. Essentially three types of information can be derived from a powder diffraction pattern: the angular position of diffraction lines (depending on geometry and size of the unit cell), the intensities of diffraction lines (depending mainly on atom type and arrangement, and particle orientation within the sample), and diffraction line profiles (depending on instrumental resolution, crystallite size, strain, and specimen thickness).

Experiments giving angular positions and intensities of lines can be used for applications such as qualitative phase analysis (e.g., identification of crystalline phases) and quantitative phase analysis of crystalline materials. An estimate of the amorphous and crystalline fractions[1] can also be made.

The X-ray powder diffraction (XRPD) method provides an advantage over other means of analysis in that it is usually nondestructive in nature (to ensure a randomly oriented sample, specimen preparation is usually limited to grinding). XRPD investigations can also be carried out under *in situ* conditions on specimens exposed to nonambient conditions such as low or high temperature and humidity.

[1] There are many other applications of the X-ray powder diffraction technique that can be applied to crystalline pharmaceutical substances, such as determination of crystal structures, refinement of crystal structures, determination of the crystallographic purity of crystalline phases, and characterization of crystallographic texture. These applications are not described in this chapter.

General Chapters

PRINCIPLES

X-ray diffraction results from the interaction between X-rays and electron clouds of atoms. Depending on atomic arrangement, interferences arise from the scattered X-rays. These interferences are constructive when the path difference between two diffracted X-ray waves differs by an integral number of wavelengths. This selective condition is described by the Bragg equation, also called Bragg's law (see *Figure 1*).

$$2d_{hkl} \sin\theta_{hkl} = n\lambda$$

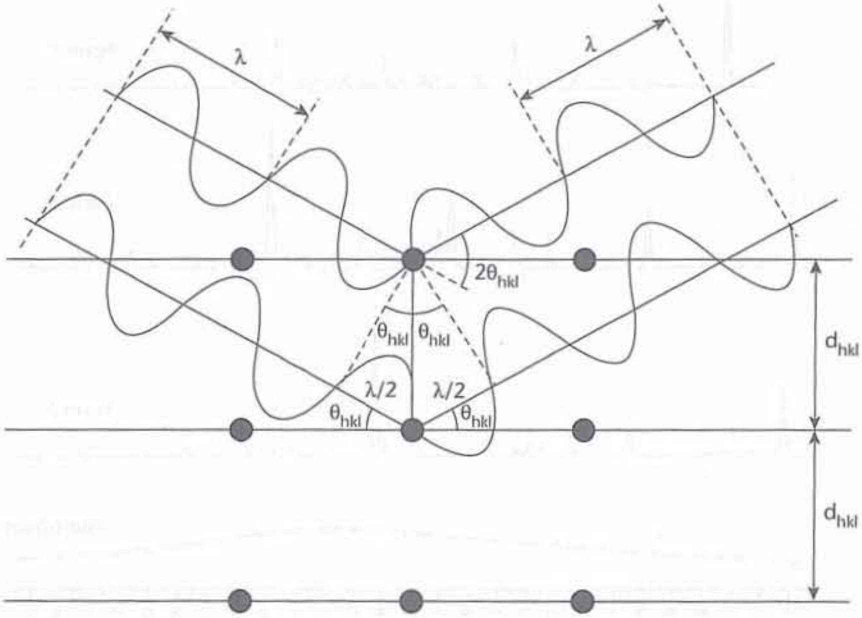

Figure 1. Diffraction of X-rays by a crystal according to Bragg's Law.

The wavelength, λ, of the X-rays is of the same order of magnitude as the distance between successive crystal lattice planes, or d_{hkl} (also called d-spacings). θ_{hkl} is the angle between the incident ray and the family of lattice planes, and sin θ_{hkl} is inversely proportional to the distance between successive crystal planes or d-spacings.

The direction and spacing of the planes with reference to the unit cell axes are defined by the Miller indices {hkl}. These indices are the reciprocals, reduced to the next-lower integer, of the intercepts that a plane makes with the unit cell axes. The unit cell dimensions are given by the spacings a, b, and c, and the angles between them α, β , and γ.

The interplanar spacing for a specified set of parallel hkl planes is denoted by d_{hkl}. Each such family of planes may show higher orders of diffraction where the d values for the related families of planes nh, nk, nl are diminished by the factor 1/n (n being an integer: 2, 3, 4, etc.).

Every set of planes throughout a crystal has a corresponding Bragg diffraction angle, θ_{hkl}, associated with it (for a specific λ).

A powder specimen is assumed to be polycrystalline so that at any angle θ_{hkl} there are always crystallites in an orientation allowing diffraction according to Bragg's law.[2] For a given X-ray wavelength, the positions of the diffraction peaks (also referred to as "lines", "reflections", or "Bragg reflections") are characteristic of the crystal lattice (d-spacings), their theoretical intensities depend on the crystallographic unit cell content (nature and positions of atoms), and the line profiles depend on the perfection and extent of the crystal lattice. Under these conditions, the diffraction peak has a finite intensity arising from atomic arrangement, type of atoms, thermal motion, and structural imperfections, as well as from instrument characteristics.

The intensity is dependent upon many factors such as structure factor, temperature factor, crystallinity, polarization factor, multiplicity, and Lorentz factor.

The main characteristics of diffraction line profiles are 2θ position, peak height, peak area, and shape (characterized by, e.g., peak width, or asymmetry, analytical function, and empirical representation). An example of the type of powder patterns obtained for five different solid phases of a substance are shown in *Figure 2*.

[2] An ideal powder for diffraction experiments consists of a large number of small, randomly oriented spherical crystallites (coherently diffracting crystalline domains). If this number is sufficiently large, there are always enough crystallites in any diffracting orientation to give reproducible diffraction patterns.

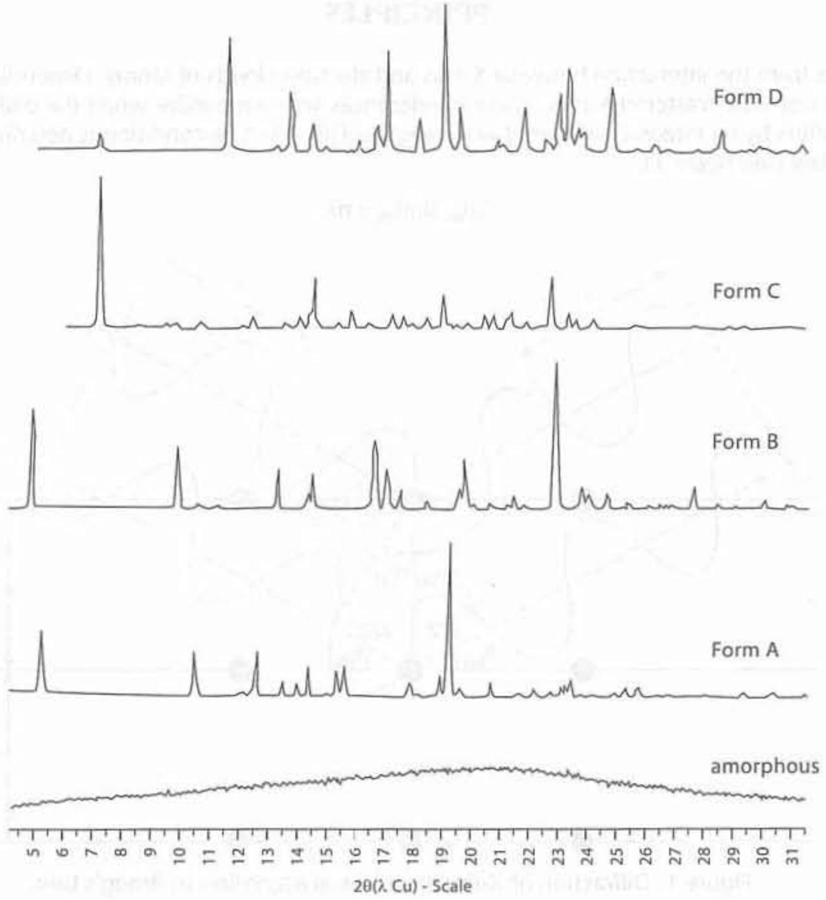

Figure 2. X-ray powder diffraction patterns collected for five different solid phases of a substance (the intensities are normalized).

In addition to the diffraction peaks, an X-ray diffraction experiment also generates a more or less uniform background, upon which the peaks are superimposed. Besides specimen preparation, other factors contribute to the background—for example, sample holder, diffuse scattering from air and equipment, and other instrumental parameters such as detector noise and general radiation from the X-ray tube. The peak-to-background ratio can be increased by minimizing background and by choosing prolonged exposure times.

INSTRUMENT

Instrument Setup

X-ray diffraction experiments are usually performed using powder diffractometers or powder cameras.

A powder diffractometer generally comprises five main parts: an X-ray source; the incident beam optics, which may perform monochromatization, filtering, collimation, and/or focusing of the beam; a goniometer; the diffraction beam optics, which may include monochromatization, filtering, collimation, and focusing or parallelizing of beam; and a detector. Data collection and data processing systems are also required and are generally included in current diffraction measurement equipment.

Depending on the type of analysis to be performed (phase identification, quantitative analysis, lattice parameters determination, etc.), different XRPD instrument configurations and performance levels are required. The simplest instruments used to measure powder patterns are powder cameras. Replacement of photographic film as the detection method by photon detectors has led to the design of diffractometers in which the geometric arrangement of the optics is not truly focusing, but parafocusing, such as in Bragg-Brentano geometry. The Bragg-Brentano parafocusing configuration is currently the most widely used and is therefore briefly described here.

A given instrument may provide a horizontal or vertical θ/2θ geometry or a vertical θ/θ geometry. For both geometries, the incident X-ray beam forms an angle θ with the specimen surface plane, and the diffracted X-ray beam forms an angle 2θ with the direction of the incident X-ray beam (an angle θ with the specimen surface plane). The basic geometric arrangement is represented in *Figure 3*. The divergent beam of radiation from the X-ray tube (the so-called primary beam) passes through the parallel plate collimators and a divergence slit assembly and illuminates the flat surface of the specimen. All the rays diffracted by suitably oriented crystallites in the specimen at an angle 2θ converge to a line at the receiving slit. A second set of parallel

plate collimators and a scatter slit may be placed either behind or before the receiving slit. The axes of the line focus and of the receiving slit are at equal distances from the axis of the goniometer. The X-ray quanta are counted by a radiation detector, usually a scintillation counter, a sealed-gas proportional counter, or a position-sensitive solid-state detector such as an imaging plate or CCD detector. The receiving slit assembly and the detector are coupled together and move tangentially to the focusing circle. For θ/2θ scans, the goniometer rotates the specimen around the same axis as that of the detector, but at half the rotational speed, in a θ/2θ motion. The surface of the specimen thus remains tangential to the focusing circle. The parallel plate collimator limits the axial divergence of the beam and hence partially controls the shape of the diffracted line profile.

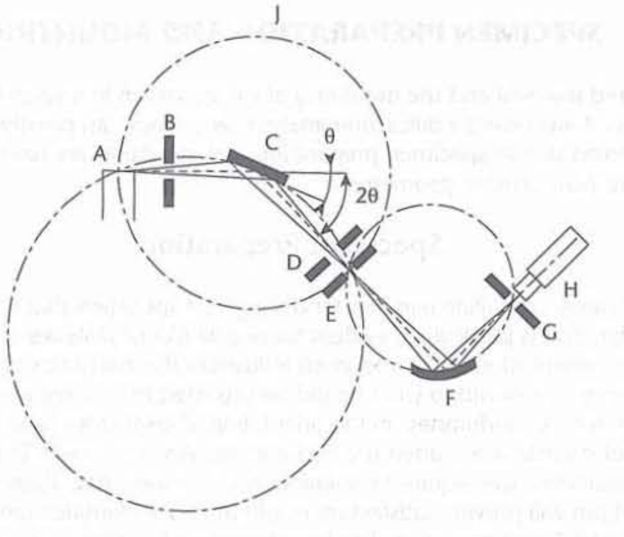

A. X-ray tube B. Divergence slit C. Sample D. Anti-diffusion slit E. Receiving slit F. Monochromator G. Detector receiving slit H. Detector J. Focusing circle

Figure 3. Geometric arrangement of the Bragg-Brentano parafocusing geometry.

A diffractometer may also be used in transmission mode. The advantage with this technology is to lessen the effects due to preferred orientation. A capillary of about 0.5- to 2-mm thickness can also be used for small sample amounts.

X-Ray Radiation

In the laboratory, X-rays are obtained by bombarding a metal anode with electrons emitted by the thermionic effect and accelerated in a strong electric field (using a high-voltage generator). Most of the kinetic energy of the electrons is converted to heat, which limits the power of the tubes and requires efficient anode cooling. A 20- to 30-fold increase in brilliance can be obtained by using rotating anodes and by using X-ray optics. Alternatively, X-ray photons may be produced in a large-scale facility (synchrotron).

The spectrum emitted by an X-ray tube operating at sufficient voltage consists of a continuous background of polychromatic radiation and additional characteristic radiation that depends on the type of anode. Only this characteristic radiation is used in X-ray diffraction experiments. The principal radiation sources used for X-ray diffraction are vacuum tubes using copper, molybdenum, iron, cobalt, or chromium as anodes; copper, molybdenum, or cobalt X-rays are employed most commonly for organic substances (the use of a cobalt anode can especially be preferred to separate distinct X-ray lines). The choice of radiation to be used depends on the absorption characteristics of the specimen and possible fluorescence by atoms present in the specimen. The wavelengths used in powder diffraction generally correspond to the K_α radiation from the anode. Consequently, it is advantageous to make the X-ray beam "monochromatic" by eliminating all the other components of the emission spectrum. This can be partly achieved using K_β filters—that is, metal filters selected as having an absorption edge between the K_α and K_β wavelengths emitted by the tube. Such a filter is usually inserted between the X-ray tube and the specimen. Another more commonly used way to obtain a monochromatic X-ray beam is via a large monochromator crystal (usually referred to as a "monochromator"). This crystal is placed before or behind the specimen and diffracts the different characteristic peaks of the X-ray beam (i.e., K_α and K_β) at different angles so that only one of them may be selected to enter into the detector. It is even possible to separate $K_{\alpha 1}$ and $K_{\alpha 2}$ radiations by using a specialized monochromator. Unfortunately, the gain in getting a monochromatic beam by using a filter or a monochromator is counteracted by a loss in intensity. Another way of separating K_α and K_β wavelengths is by using curved X-ray mirrors that can simultaneously monochromate and focus or parallelize the X-ray beam.

RADIATION PROTECTION

Exposure of any part of the human body to X-rays can be injurious to health. It is therefore essential that whenever X-ray equipment is used, adequate precautions be taken to protect the operator and any other person in the vicinity. Recommended practice for radiation protection as well as limits for the levels of X-radiation exposure are those established by national legislation in each country. If there are no official regulations or recommendations in a country, the latest recommendations of the International Commission on Radiological Protection should be applied.

SPECIMEN PREPARATION AND MOUNTING

The preparation of the powdered material and the mounting of the specimen in a suitable holder are critical steps in many analytical methods, particularly for X-ray powder diffraction analysis, since they can greatly affect the quality of the data to be collected.[3] The main sources of errors due to specimen preparation and mounting are briefly discussed in the following section for instruments in Bragg-Brentano parafocusing geometry.

Specimen Preparation

In general, the morphology of many crystalline particles tends to give a specimen that exhibits some degree of preferred orientation in the specimen holder. This is particularly evident for needle-like or platelike crystals when size reduction yields finer needles or platelets. Preferred orientation in the specimen influences the intensities of various reflections so that some are more intense and others less intense, compared to what would be expected from a completely random specimen. Several techniques can be employed to improve randomness in the orientation of crystallites (and therefore to minimize preferred orientation), but further reduction of particle size is often the best and simplest approach. The optimum number of crystallites depends on the diffractometer geometry, the required resolution, and the specimen attenuation of the X-ray beam. In some cases, particle sizes as large as 50 µm will provide satisfactory results in phase identification. However, excessive milling (crystallite sizes less than approximately 0.5 µm) may cause line broadening and significant changes to the sample itself, such as

- specimen contamination by particles abraded from the milling instruments (mortar, pestle, balls, etc.),
- reduced degree of crystallinity,
- solid-state transition to another polymorph,
- chemical decomposition,
- introduction of internal stress, and
- solid-state reactions.

Therefore, it is advisable to compare the diffraction pattern of the nonground specimen with that corresponding to a specimen of smaller particle size (e.g., a milled specimen). If the X-ray powder diffraction pattern obtained is of adequate quality considering its intended use, then grinding may not be required.

It should be noted that if a sample contains more than one phase and if sieving is used to isolate particles to a specific size, the initial composition may be altered.

Specimen Mounting

EFFECT OF SPECIMEN DISPLACEMENT

A specimen surface that is offset by D with reference to the diffractometer rotation axis causes systematic errors that are very difficult to avoid entirely; for the reflection mode, this results in absolute $D \cdot \cos\theta$ shifts[4] in 2θ positions (typically of the order of 0.01° in 2θ at low angles

$$[\cos\theta = 1]$$

for a displacement D = 15 µm) and asymmetric broadening of the profile toward low 2θ values. Use of an appropriate internal standard allows the detection and correction of this effect simultaneously with that arising from specimen transparency. This effect is by far the largest source of errors in data collected on well-aligned diffractometers.

---

[3] Similarly, changes in the specimen can occur during data collection in the case of a nonequilibrium specimen (temperature, humidity).

[4] Note that a goniometer zero alignment shift would result in a constant shift on all observed 2θ-line positions; in other words, the whole diffraction pattern is, in this case, translated by an offset of Z° in 2θ.

EFFECT OF SPECIMEN THICKNESS AND TRANSPARENCY

When the XRPD method in reflection mode is applied, it is often preferable to work with specimens of "infinite thickness". To minimize the transparency effect, it is advisable to use a nondiffracting substrate (zero background holder)—for example, a plate of single crystalline silicon cut parallel to the 510 lattice planes.[5] One advantage of the transmission mode is that problems with sample height and specimen transparency are less important.

The use of an appropriate internal standard allows the detection and correction of this effect simultaneously with that arising from specimen displacement.

CONTROL OF THE INSTRUMENT PERFORMANCE

The goniometer and the corresponding incident and diffracted X-ray beam optics have many mechanical parts that need adjustment. The degree of alignment or misalignment directly influences the quality of the results of an XRPD investigation. Therefore, the different components of the diffractometer must be carefully adjusted (optical and mechanical systems, etc.) to adequately minimize systematic errors, while optimizing the intensities received by the detector. The search for maximum intensity and maximum resolution is always antagonistic when aligning a diffractometer. Hence, the best compromise must be sought while performing the alignment procedure. There are many different configurations, and each supplier's equipment requires specific alignment procedures. The overall diffractometer performance must be tested and monitored periodically, using suitable certified reference materials. Depending on the type of analysis, other well-defined reference materials may also be employed, although the use of certified reference materials is preferred.

QUALITATIVE PHASE ANALYSIS (IDENTIFICATION OF PHASES)

The identification of the phase composition of an unknown sample by XRPD is usually based on the visual or computer-assisted comparison of a portion of its X-ray powder pattern to the experimental or calculated pattern of a reference material. Ideally, these reference patterns are collected on well-characterized single-phase specimens. This approach makes it possible in most cases to identify a crystalline substance by its 2θ-diffraction angles or d-spacings and by its relative intensities. The computer-aided comparison of the diffraction pattern of the unknown sample to the comparison data can be based on either a more or less extended 2θ range of the whole diffraction pattern or on a set of reduced data derived from the pattern. For example, the list of d-spacings and normalized intensities, I_{norm}, a so-called (d, I_{norm}) list extracted from the pattern, is the crystallographic fingerprint of the material and can be compared to (d, I_{norm}) lists of single-phase samples compiled in databases.

For most organic crystals, when using Cu K_α radiation, it is appropriate to record the diffraction pattern in a 2θ-range from as near 0° as possible to at least 40°. The agreement in the 2θ-diffraction angles between specimen and reference is within 0.2° for the same crystal form, while relative intensities between specimen and reference may vary considerably due to preferred orientation effects. By their very nature, variable hydrates and solvates are recognized to have varying unit cell dimensions, and as such, shifting occurs in peak positions of the measured XRPD patterns for these materials. In these unique materials, variance in 2-θ positions of greater than 0.2° is not unexpected. As such, peak position variances such as 0.2° are not applicable to these materials. For other types of samples (e.g., inorganic salts), it may be necessary to extend the 2θ region scanned to well beyond 40°. It is generally sufficient to scan past the 10 strongest reflections identified in single-phase X-ray powder diffraction database files.

It is sometimes difficult or even impossible to identify phases in the following cases:

- noncrystallized or amorphous substances,
- the components to be identified are present in low mass fractions of the analyte amounts (generally less than 10% m/m),
- pronounced preferred orientation effects,
- the phase has not been filed in the database used,
- the formation of solid solutions,
- the presence of disordered structures that alter the unit cell,
- the specimen comprises too many phases,
- the presence of lattice deformations,
- the structural similarity of different phases.

[5] In the case of a thin specimen with low attenuation, accurate measurements of line positions can be made with focusing diffractometer configurations in either transmission or reflection geometry. Accurate measurements of line positions on specimens with low attenuation are preferably made using diffractometers with parallel beam optics. This helps to reduce the effects of specimen thickness.

QUANTITATIVE PHASE ANALYSIS

If the sample under investigation is a mixture of two or more known phases, of which not more than one is amorphous, the percentage (by volume or by mass) of each crystalline phase and of the amorphous phase can in many cases be determined. Quantitative phase analysis can be based on the integrated intensities, on the peak heights of several individual diffraction lines,[6] or on the full pattern. These integrated intensities, peak heights, or full-pattern data points are compared to the corresponding values of reference materials. These reference materials must be single phase or a mixture of known phases. The difficulties encountered during quantitative analysis are due to specimen preparation (the accuracy and precision of the results require, in particular, homogeneity of all phases and a suitable particle size distribution in each phase) and to matrix effects.

In favorable cases, amounts of crystalline phases as small as 10% may be determined in solid matrices.

Polymorphic Samples

For a sample composed of two polymorphic phases *a* and *b*, the following expression may be used to quantify the fraction F_a of phase *a*:

$$F_a = 1/[1 + K(I_b/I_a)]$$

The fraction is derived by measuring the intensity ratio between the two phases, knowing the value of the constant K. K is the ratio of the absolute intensities of the two pure polymorphic phases I_{oa}/I_{ob}. Its value can be determined by measuring standard samples.

Methods Using a Standard

The most commonly used methods for quantitative analysis are

- the external standard method,
- the internal standard method, and
- the spiking method (also often called the standard addition method).

The external standard method is the most general method and consists of comparing the X-ray diffraction pattern of the mixture, or the respective line intensities, with those measured in a reference mixture or with the theoretical intensities of a structural model, if it is fully known.

To limit errors due to matrix effects, an internal reference material can be used that has a crystallite size and X-ray absorption coefficient comparable to those of the components of the sample and with a diffraction pattern that does not overlap at all that of the sample to be analyzed. A known quantity of this reference material is added to the sample to be analyzed and to each of the reference mixtures. Under these conditions, a linear relationship between line intensity and concentration exists. This application, called the internal standard method, requires precise measurement of diffraction intensities.

In the spiking method (or standard addition method), some of the pure phase a is added to the mixture containing the unknown concentration of a. Multiple additions are made to prepare an intensity-versus-concentration plot in which the negative x-intercept is the concentration of the phase a in the original sample.

ESTIMATE OF THE AMORPHOUS AND CRYSTALLINE FRACTIONS

In a mixture of crystalline and amorphous phases, the crystalline and amorphous fractions can be estimated in several ways. The choice of the method used depends on the nature of the sample:

- If the sample consists of crystalline fractions and an amorphous fraction of different chemical compositions, the amounts of each of the individual crystalline phases may be estimated using appropriate standard substances, as described above. The amorphous fraction is then deduced indirectly by subtraction.
- If the sample consists of one amorphous and one crystalline fraction, either as a 1-phase or a 2-phase mixture, with the same elemental composition, the amount of the crystalline phase (the "degree of crystallinity") can be estimated by measuring three areas of the diffractogram:

  A = total area of the peaks arising from diffraction from the crystalline fraction of the sample,

  B = total area below area A,

  C = background area (due to air scattering, fluorescence, equipment, etc).

[6] If the crystal structures of all components are known, the Rietveld method can be used to quantify them with good accuracy. If the crystal structures of the components are not known, the Pawley method or the partial least-squares (PLS) method can be used.

When these areas have been measured, the degree of crystallinity can be roughly estimated as:

$$\% \text{ crystallinity} = 100A/(A + B - C)$$

It is noteworthy that this method does not yield an absolute degree of crystallinity values and hence is generally used for comparative purposes only. More sophisticated methods are also available, such as the Ruland method.

SINGLE CRYSTAL STRUCTURE

In general, the determination of crystal structures is performed from X-ray diffraction data obtained using single crystals. However, crystal structure analysis of organic crystals is a challenging task, since the lattice parameters are comparatively large, the symmetry is low, and the scattering properties are normally very low. For any given crystalline form of a substance, the knowledge of the crystal structure allows for calculating the corresponding XRPD pattern, thereby providing a preferred orientation-free reference XRPD pattern, which may be used for phase identification.

General Chapters

General Information

General Information

The chapters in this section are information, and aside from excerpts given herein from Federal Acts and regulations that may be applicable, they contain no standards, tests, assays, nor other mandatory specifications, with respect to any Pharmacopeial articles. The excerpts from pertinent Federal Acts and regulations included in this section are placed here inasmuch as they are not of Pharmacopeial authorship. Revisions of the federal requirements that affect these excerpts will be included in *USP Supplements* as promptly as practical. The official requirements for Pharmacopeial articles are set forth in the *General Notices*, the individual monographs, and the *General Tests and Assays* chapters of this *Pharmacopeia.*

〈1004〉 MUCOSAL DRUG PRODUCTS—PERFORMANCE TESTS

INTRODUCTION

Mucosal drug products deliver drug substances to the body via the mucosal route. For the purposes of this chapter, the mucosal route of drug administration is divided into seven membrane surfaces characterized as otic, ophthalmic, nasal, oropharyngeal, urethral, vaginal, and rectal. Mucosal drug products include a wide variety of dosage forms such as solutions, suspensions, emulsions, creams, ointments, gels, inserts, strips, aerosols, sprays, films, medicated chewing gums, lozenges, tablets, and suppositories. Some of these dosage forms are also administered by other routes. For example, creams can be administered by the mucosal route (vaginal) and also by the topical route. Two categories of tests—product quality and product performance—are performed on these products. These tests provide assurances of batch-to-batch quality, reproducibility, reliability, and performance of a drug product. Product quality tests are performed to assess attributes such as assay, identification, and content uniformity and are part of the compendial monograph (see *Mucosal Drug Products—Product Quality Tests* 〈4〉). Product performance tests are conducted to assess the drug release from the dosage form. For certain mucosal drug products, determination of aerodynamic particle size or globule size may serve as a product performance test.

Where a compendial performance test exists for a dosage form administered by a nonmucosal route, such as a dissolution test for an oral tablet, that test may have application for the dosage form administered by a mucosal route (e.g., buccal tablets or sublingual tablets).

PERFORMANCE TESTS FOR MUCOSAL DRUG PRODUCTS

The performance tests for the various mucosal drug products can be broadly divided into two categories: 1) test procedures that use or can adopt methodology in existing general chapters, and 2) tests that need additional developmental work before they can be recommended.

The Dissolution Procedure: Development and Validation 〈1092〉 should be a reference when developing a drug release test (e.g., selecting the drug release medium, apparatus/procedure, or analytical method). For several mucosal drug products, drug release procedures described in *Dissolution* 〈711〉, *Drug Release* 〈724〉, and *Semisolid Drug Products—Performance Tests* 〈1724〉 may be applicable.

In some instances, mini-basket or mini-paddle apparatuses may be suitable. These apparatuses resemble *Dissolution* 〈711〉, *Apparatus 1 (Basket Apparatus)* and *Dissolution* 〈711〉, *Apparatus 2 (Paddle Apparatus)*, with dimensions scaled down to accommodate medium volumes of <500 mL (*1,2*). Several designs are commercially available. However, as of now, these apparatuses are not standardized.

Because of the varied and specific environments characterizing the mucosal route of administration, researchers may be inclined to use "physiological medium" for the drug release of the specific dosage form. It may not be essential to use such a

medium for the performance test of the product, and in many instances a simple buffer may suffice. A reference (*3*) for the composition of such media is provided for additional information.

Aerosols and Nasal Sprays

Performance tests for nasal and lingual aerosols and nasal sprays are largely concerned with droplet or particle size distribution and aerodynamic size distribution. The procedures in *Inhalation and Nasal Drug Products: Aerosols, Sprays, and Powders—Performance Quality Tests* ⟨601⟩ can be applied to products administered by mucosal routes. When the drug substance is present as a solid with a modified-release mechanism in the administered dose, attempts should be made to determine the dissolution of the particles (*4*).

Creams, Gels, and Ointments

Drug release tests for creams, gels, and ointments can be performed using a procedure described in ⟨1724⟩.

Emulsions

Performance tests for emulsions include globule size determination and dissolution/drug release testing. Globule size can be determined using a procedure described in *Globule Size Distribution in Lipid Injectable Emulsions* ⟨729⟩. The drug release test can be performed using *Dissolution* ⟨711⟩, *Apparatus 2 (Paddle Apparatus)* or a vertical diffusion cell as described in *Semisolid Drug Products—Performance Tests* ⟨1724⟩, *Drug Release Rate Determination Using Vertical Diffusion Cell Apparatus*.

Films

Drug Release ⟨724⟩, *Apparatus 5 (Paddle over Disk)* can be used to determine the drug release from film dosage forms. A mini-basket can be used for drug release testing of films.

Gums

For gum products, the performance test includes drug release from the formulation. A device is described in the *European Pharmacopoeia* (*5*). The release of drug from the formulation requires masticatory activity that renews the surface exposed to the medium. The rate of release will be a function in part of the frequency of chewing that is simulated by the test apparatus. Gums can require conditioning at the temperature of the mouth to deform plastically under the action of the oscillating platens of the test apparatus.

Important parameters for the apparatus include: dissolution medium volume, distance between upper and lower chewing surfaces, recommended rotation angle, temperature, and chewing frequency. The dissolution medium chosen, the test time(s), and the volume sampled are also important considerations.

Inserts

Drug release testing for inserts can be performed using *Dissolution* ⟨711⟩, *Apparatus 1 (Basket Apparatus)* or *Dissolution* ⟨711⟩, *Apparatus 2 (Paddle Apparatus)*.

Lozenges

Drug release testing of lozenges can be performed using either *Dissolution* ⟨711⟩, *Apparatus 1 (Basket Apparatus)*; *Dissolution* ⟨711⟩, *Apparatus 2 (Paddle Apparatus)* at high agitation (175 rpm); or *Dissolution* ⟨711⟩, *Apparatus 3 (Reciprocating Cylinder)*.

Suppositories

There are two types of suppositories: 1) hydrophilic (water soluble), and 2) lipophilic (oil soluble or melting). Drug release (dissolution) for water-soluble suppositories can be performed using *Dissolution* ⟨711⟩, *Apparatus 1 (Basket Apparatus)*; *Dissolution* ⟨711⟩, *Apparatus 2 (Paddle Apparatus)*; or *Dissolution* ⟨711⟩, *Apparatus 4 (Flow-Through Cell)*. Drug release testing for lipophilic suppositories may need modification of the dissolution procedure to avoid analytical interference from the oil globules. Several alternative methods have been proposed (*6–8*). The flow-through cell apparatus using the cell for suppositories may be useful. The selection of the method will be dependent on the nature of the formulation. *Figure 1* shows the schematic view of a flow-through cell [*Dissolution* ⟨711⟩, *Apparatus 4 (Flow-Through Cell)*] specifically intended for dissolution of suppositories. The lower part (1) is made up of two adjacent chambers connected to an overflow device. The dissolution medium passes through chamber A and is subjected to an upward flow. The flow in chamber B is directed downward to a small-size bore exit that leads upward to a filter assembly. The middle part (2) of the cell has a cavity designed to collect lipophilic excipients that float

on the dissolution medium. A metal grid serves as a rough filter. The upper part (3) holds a filter unit for paper, glass fiber, or cellulose filters.

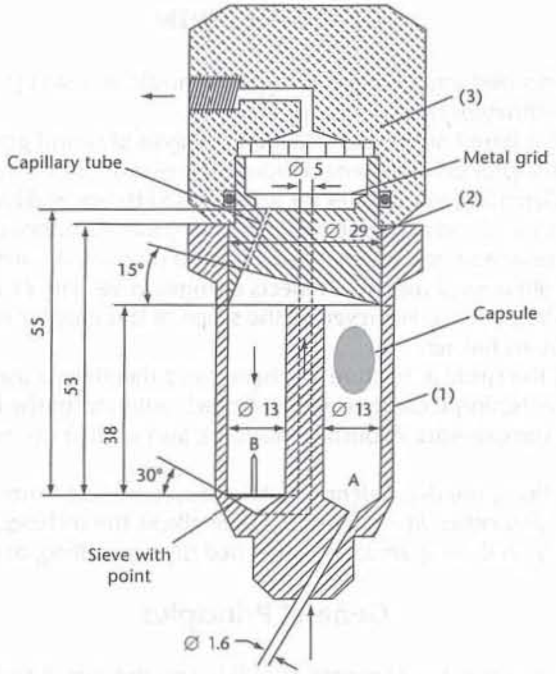

Figure 1. Flow-through cell designed for suppositories (dimensions in mm).

Suspensions

The dissolution test for suspensions can be performed using *Dissolution* ⟨711⟩, *Apparatus 2 (Paddle Apparatus)*. A small-volume, mini-paddle apparatus may be used.

Sublingual Tablets and Buccal Tablets

Drug release for these dosage forms can be performed using *Dissolution* ⟨711⟩, *Apparatus 1 (Basket Apparatus)* or *Dissolution* ⟨711⟩, *Apparatus 2 (Paddle Apparatus)*. Mini-baskets or the mini-paddles can also be used for drug release testing of buccal and sublingual tablets.

REFERENCES

1. Klein S, Shah VP. A standardized mini paddle apparatus as an alternative to the standard paddle. *AAPS PharmSciTech.* 2008;9(4):1179–1184.
2. Crist GB. Trends in small-volume dissolution apparatus for low-dose compounds. *Dissolut Technol.* 2009;16(1):19–22.
3. Marques MRC, Loebenberg R, Almukainzi M. Simulated biological fluids with possible application in dissolution testing. *Dissolut Technol.* 2011;18(3):15–28.
4. Son Y-J, Horng M, Copley M, McConville JT. Optimization of an in vitro dissolution test method for inhalation formulations. *Dissolut Technol.* 2010;17(2):6–13.
5. Dissolution test for medicated chewing gums. *European Pharmacopoeia* 8.5, 2.9.25. Strasbourg, France: Directorate for the Quality of Medicines of the Council of Europe (EDQM); 2015: 325–328. https://www.edqm.eu/en
6. Yamazaki M, Itoh S, Sasaki N, Tanabe K, Uchiyama M. Comparison of three test methods for suppositories. *Pharmacopeial Forum.* 1991;17(5):2427–2437.
7. Gjellan K, Graffner C. Comparative dissolution studies of rectal formulations using the basket, the paddle, and the flow-through methods. I. Paracetamol in suppositories and soft gelatin capsules of both hydrophilic and lipophilic types. *Acta Pharm Nord.* 1989;1(6):343–354.
8. Palmieri A. Suppository dissolution testing: apparatus design and release of aspirin. *Drug Dev Ind Pharm.* 1981;7(2):247–259.

General Chapters

⟨1005⟩ ACOUSTIC EMISSION

INTRODUCTION

Ultrasound techniques can be categorized into two distinct types: acoustic emission (passive mode) and ultrasound spectroscopy (active mode). Both of these techniques have many applications.

The technique of acoustic emission is based on the detection and analysis of sound produced by a process or system. This is essentially equivalent to listening to the process or system, although these sounds are often well above the frequencies that can be detected by the human ear. Generally, frequencies up to about 15 kHz are audible.

In the case of ultrasound spectroscopy, the instrument is designed to generate ultrasound waves across a defined frequency range. These waves travel through the sample and are measured using a receiver. An analogy can be drawn with UV-visible or IR spectroscopy in that the detected ultrasound spectrum reflects changes in velocity or sound attenuation due to the interaction with a sample across a range of frequencies. However, as the scope of this chapter is limited to acoustic emission, ultrasound spectroscopy will not be discussed further.

Acoustic emission is well-known in the study of fracture mechanics and therefore is used extensively by material scientists. It is also widely used as a nondestructive testing technique and is applied routinely for the inspection of aircraft wings, pressure vessels, load-bearing structures, and components. Acoustic emission is also used in the engineering industry for the monitoring of machine tool wear.

In terms of pharmaceutical applications, the dependence of the acoustic emission measurement on physical properties such as particle size, mechanical strength, and cohesivity of solid materials allows the technique to be used for the control and end-point detection of processes such as high shear granulation, fluid bed drying, milling, and micronization.

General Principles

Acoustic emissions can propagate by a number of modes. In solids, compressional and shear or transverse modes are important. Compressional modes have the highest velocity and thus reach the acoustic detector (or acoustic emission transducer) first. However, in most process applications of acoustic emission, there are many sources—each producing short bursts of energy—and, consequently, the different modes cannot easily be resolved. The detected signal, for example on the wall of a vessel, is a complex mixture of many overlapping waveforms resulting from many sources and many propagation modes.

At interfaces, depending on the relative acoustic impedance of the two materials, much of the energy is reflected back towards the source. In a fluidized bed, for example, acoustic emissions will only be detected from particles directly impacting the walls of the bed close to the transducer.

A convenient method of studying acoustic emission from processes is to use the "average signal level". A root mean square-to-direct current (RMS-to-DC) converter may be used to convert the amplitude-modulated (AM) carrier into a more slowly varying DC signal. This is referred to as the average signal level (ASL). The ASL can then be digitally sampled (typically at a sampling frequency of about 50 Hz) and stored electronically for further signal processing.

The simplest way of studying the acoustic data is to examine changes in the ASL. However, other information can be derived from examining the power spectrum of the ASL. The power spectrum is calculated by taking the complex square of the amplitude spectrum and can be obtained by performing a Fast Fourier Transform (FFT) on the digitized raw data record. Power spectra may be averaged to produce a reliable estimate of power spectral density or to give a "fingerprint" of a particular process regime. Interpretation of the power spectrum is complicated by the fact that the acoustic signal originating in the system is distorted by several factors including transmission, reflection, and signal transfer characteristics.

The shape of the power spectrum of the ASL record is a function of the process dynamics. Periodic processes (e.g., mechanical stirring or periodic bubbling of a fluidized bed) show high power at certain discrete frequencies. Random processes show either flicker type properties, where power is inversely proportional to frequency, or white noise type properties in which power is independent of frequency. The amplitude of the power spectrum is also affected by the energy of the acoustic emissions produced by the process. For example, if hard material is being processed, the acoustic emission produced by particle impact will be greater than that produced by soft material.

INSTRUMENTATION

Generally, piezoelectric sensors are used to detect and quantify the acoustic signals produced by a process. Piezoelectric transducers are constructed from piezoelectric crystalline solids connected to transducer control circuitry by electrical leads. When configured as a detector, an acoustic wave that impinges on the piezoelectric element is transformed into an electrical signal in the transducer control circuitry. When configured as an acoustic generator, an electrical signal applied to the piezoelectric element by the control circuitry creates an acoustic wave that can propagate into the medium to which the transducer is attached. Typically, this means that acoustic emission detectors can also be operated as acoustic wave generators and this feature is used to ensure good sensor performance as described later (see *Qualification and Verification of Acoustic Emission Instruments*).

In general acoustic emission applications, sensors with different resonance frequencies are often used (e.g., 70 and 190 kHz, although higher frequencies may be more appropriate at smaller scales of operation), incorporating various band-passes. As sound (ultrasound) of the appropriate frequency range reaches these sensors, an electrical signal is generated, the amplitude of which is directly proportional to the energy (amplitude) of the incident sound waves.

These signals are processed through the following:

(1) a pre-amplifier (which incorporates signal filtering),
(2) an RMS-to-DC converter,
(3) a variable gain amplifier, and
(4) a PC-based data acquisition board.

The controlling software is also incorporated into the PC.

Acoustic emission equipment generally allows several sensors to be used simultaneously by incorporating multiple electronic channels into a single instrument.

Signal Processing

The signal from a resonant transducer resembles an AM radio signal. At the resonance frequency of the transducer, the signal consists of a carrier wave that is modulated in amplitude by the process. An RMS-to-DC converter is used to demodulate the signal. The output of this device is the modulation signal or envelope.

The envelope is digitally resampled at a frequency appropriate for the process. For example, 50 Hz is a typical digital sampling rate for a fluid bed drier or high shear granulator.

FACTORS AFFECTING MEASUREMENT

The following factors can affect the acoustic data obtained and should be considered when installing an acoustic emission system.

1. *Failure or Physical Damage*—As with any other type of sensor, acoustic emission sensors can fail with time or as a result of physical damage. It is important to check the sensor function as part of routine maintenance of the instrument. If multiple sensors are installed on the same vessel, an active signal can be generated from one sensor and this can be used to check the detection on another sensor. This exercise would ensure that the sensors are detecting the acoustic signals generated by the process. A statistically valid "minimum acceptable acoustic signal" for the sensor(s) should also be determined and monitored at the start, middle, and end of a process to ensure the performance of the sensor(s) during a process run. This may be established from the routine maintenance signal experiments or on the basis of historical data for the sensors.
2. *Issues of Sensor Interfacing*—Sensors are typically installed on the outer wall of the process vessel. Several types of adhesives (temporary or permanent) can be used to attach the sensor to the vessel wall. Through repeated cleaning and vessel movement, it is possible for the bonding between the sensor and vessel to be compromised. Checking the integrity of the installation should be part of routine maintenance. Similar to item 1 above, an active signal can be used to ensure proper bonding between sensor and vessel and helps to confirm the matching of acoustic impedance.
3. *Influence of Mechanical Noise*—The use of high frequencies significantly reduces the contribution of mechanical noise to the acoustic signal detected, especially at smaller scales of operation, although it does not eliminate it completely. Testing the effect of various motor settings, for example, can determine if the acoustic signal detected is a function of mechanical noise. If the effect is significant, using higher frequencies may be necessary. Awareness of the contribution of the mechanical noise, no matter how small, is important to consider as the motors age or are replaced.
4. *Influence of Vessel Wall Characteristics*—Because the sensors are often placed on the outer vessel wall, wall thickness can affect the quality of the signal detected. If the vessel is jacketed, the amplitude of the acoustic signal may be reduced. Adding more sensors on the vessel can improve signal quality. Alternatively, an increase in signal may be obtained by positioning sensor(s) at a location where contact exists between the inner and outer walls, essentially providing a waveguide between the sensor and sound source. Waveguides may also be incorporated into the design of manufacturing equipment to enable utilization of acoustic emission monitoring. Appropriate validation is required to ensure that this does not adversely affect the performance of equipment.
5. *Effect of Material Properties*—During operation, the acoustic signal collected is a summation of various events occurring within the process. For example, the acoustic signal generated as particles hit the wall in a granulator is a function of the material properties of the granules (i.e., density, size, porosity). Therefore, significant changes to any of these parameters can affect the acoustic signal and the quality of the ensuing prediction.
6. *Influence of Process-Related Factors*—Similar to item 5 above, the process-related properties (i.e., force of impact, frequency of impact, amount of material) can also affect the acoustic signal and the quality of the ensuing prediction.
7. *Impact of Environmental Conditions*—Finally, the influence of environmental factors (i.e., temperature, humidity) must also be considered.

The acoustic emission data collected is vessel/equipment specific. It is not advisable to apply a model generated on one piece of equipment to another because the acoustic information can differ as a result of the issues discussed in items 3, 4, and 5 above.

Qualification and Verification of Acoustic Emission Instruments

A system suitability approach should be taken around instrument performance, establishing optimum measurement configuration, then comparing the instrument performance to the values obtained during routine use to those obtained during installation qualification (IQ).

This approach effectively answers the issues related to sampling because, unlike other on-line analytical systems, the transducers can be optimally positioned and attached to receive the maximum signal without vessel modification.

Sample rates need to comply with the Nyquist sampling theorem, which states that a signal must be sampled at a rate that is twice the highest frequency component in the signal. A low-pass filter should be used to remove the frequency components greater than half the sampling frequency (Nyquist frequency). Failure to comply with this criterion will result in aliasing.

Owing to the nature of the piezoelectric transducers and because resonance frequencies are natural properties of the crystals, it is not necessary to test the variation (reproducibility) or drift in the frequency domain. If other types of transducers are used, this may be necessary. Any gross change in the frequency domain will be recorded as a drop in the power intensity at the resonance frequency, and therefore is covered by the power intensity tests.

The two main areas for instrument performance verification are power intensity and timings. Any change in the signal intensity will affect the raw signal and the ASL and, therefore, will also affect the power spectrum. Changes in power intensity can occur as a result of changes in the process (e.g., variation in hardness or moisture in the particles impacting the vessel wall) or changes in the acoustic conduit from the process to transducer.

Reproducibility of the acoustic conduit should be tested using a second transducer to input a pulse or "ping" at the resonance frequency of the receiving sensor. This reproducibility value represents the noise of the signal and can be used in calculations of limit of detection (LOD) and limit of quantitation (LOQ), where LOD is defined as three times the noise of the signal and LOQ is ten times the noise of the signal. The noise on the background signal level (in acoustic emission this background signal is mainly due to amplifier noise) should be calculated from twenty sequential ASL values acquired at the sampling frequency used for normal operation. This test should be repeated in reverse in order to establish that statistically similar intensity values can be obtained on both channels.

Short term reproducibility allows the calculation of noise. However, it does not give a measure of integrity of acoustic conduit over time or, more specifically, of changes caused by the process (e.g., variations in adhesive properties with process changes such as heating/cooling). The noise test should be repeated while executing the normal processing parameters (using an empty vessel) and the drift in the ASL should be calculated. Care should be taken to make sure that signal drift (due to normal variation in processing parameters) does not impact chemometric models used for endpoint determination. For trend plots, it should be shown that drift is not statistically significant; otherwise, drift correction will need to be applied. Values for noise, drift, and absolute ASL should be recorded and logged, and the tests re-executed if changes are made to the processing equipment or to the acoustic emission system. If no changes are made, then the tests should be re-executed every month. In this way the quality of the acoustic conduit can be shown to be intact and any changes to the signal intensity isolated and attributed to the process itself.

During routine use, it is recommended that the noise test be executed (as above) before each process run, and that power intensity and noise be calculated. These values should be logged and compared to those generated both during previous use and during installation. Impact of the deviation from previous values will be a function of the prediction model and should be addressed by method validation.

The noise data (from above) can also be used to calculate the time of flight of the pulse. If the pulse activation and signal reception are synchronized, the time taken for the pulse to transmit across the vessel can be measured. This is a good indication of the measurement electronics as well as the overall condition of the acoustic conduit. However, this test should be regarded as a measure of the "system" condition and needs to be executed only if changes have been made to the process equipment or the acoustic emission system, or every 6 months. Correlation of the measured timings with the historical ones should be statistically valid. If not, it is an indicator that the acoustic emission system may need requalification by the instrument manufacturer or supplier, or that there are changes in the acoustic conduit.

All of these tests require the use of an acoustic pulse generated electrically. Failure in any of the above tests could be attributed to the signal generation itself. It is recommended that the electrical pulse generation system be requalified and certified against National Institute of Standards and Technology (NIST) traceable standards every 12 months.

DATA ANALYSIS

Acoustic emission from granulators and fluid bed driers is known as continuous acoustic emission. Continuous acoustic emission is aphasic (i.e., there are no starts or stops to the signal). This means that it is unnecessary to use signal processing techniques that preserve phase. Power spectral analysis is a useful technique in processing acoustic emission signals. The information in the power spectra, unlike the raw acoustic emission signals, is coherent in the short term, allowing signal averaging to be performed. This provides a better estimate of power spectral density than that provided by a single power spectrum.

To detect endpoints in batch processes (e.g., granulation or drying endpoint), a qualitative multivariate model is appropriate (e.g., PCA or SIMCA). The following sequence of operations is performed:

(1) *Training/Calibration*—Acoustic emission spectra that are representative of the endpoint condition are obtained.

General Chapters

(2) *Modeling*—A multivariate model describing the distribution of acoustic emission signals at the endpoint condition is created.

(3) *Prediction*—Acoustic emission spectra are compared against the model. The fit to the model (usually expressed in terms of a number of standard deviations) is monitored. As the system approaches the endpoint, the fit improves and completion of the process is established once the model fits predefined criteria. The prediction model is generated from acoustic emission spectra obtained from the process operating under normal conditions. Upsets (e.g., unwanted agglomeration in coaters) are detected by observing statistically valid deviations from the model.

Adaptive modeling has also been proposed for upset detection. This involves generating multivariate models continuously as the acoustic emission signals are acquired. Unusual deviation of the acoustic emission signal indicates the occurrence of a process upset. The advantage of adaptive modeling is that it is not necessary to perform a separate calibration step.

GLOSSARY

Acoustic Emission Transducer: A solid state device usually incorporating a piezoelectric element to convert the acoustic emission wave to an electrical signal.
Acoustic Impedance: Acoustic impedance (Z) is defined as $Z = \rho v$ (where ρ is density and v is the sound velocity). It is an important quantity and gives the proportion of sound energy transmitted from one medium to another and the amount of energy reflected at the interface.
Adaptive Modeling: A method that predicts the state of a process without the use of a previously generated model (i.e., there is no prior training or calibration step).
Aliasing: Spurious low frequency components, appearing in the signal, that are really frequencies above the Nyquist frequency.
Amplitude: The magnitude or strength of a varying waveform.
Average Signal Level (ASL): A measure of the average power in an acoustic emission signal.
Band-Pass: The range of frequencies within which a component operates.
Compressional Mode: A longitudinal mode of acoustic transmission encountered in solids, liquids, and gases.
Continuous Acoustic Emission: Acoustic emission signals that cannot be separated in time and are typical of pharmaceutical processes such as granulation and fluid bed drying.
Flicker Type Properties: A type of signal associated with many natural processes. The characteristics of flicker noise are that the power of the noise is directly proportional to the signal and has approximately a 1/f (f = frequency) spectral density distribution.
Gain: The amplification factor for a component usually expressed in terms of decibels (dB).
Gain in dB = 20 $\log_{10}$ (Voltage_{out} Voltage_{in}).
Nyquist Frequency: The Nyquist frequency is defined as half the digital sampling rate and is the highest frequency that can be reproduced faithfully.
Piezoelectric: A material which generates an electric field when compressed. Piezoelectric materials are used in the construction of acoustic emission sensors. A common material is PZT (lead zirconium titanate).
Power Spectrum: A power spectrum of a signal is a representation of the signal power as a function of frequency. A power spectrum is calculated from the time domain signal by means of the Fast Fourier Transform (FFT) algorithm. It is useful to study acoustic emission signals in the frequency or spectral domain, as the spectrum is often characteristic of the mechanism. Improvements in signal-to-noise ratio can be obtained by averaging a number of power spectra, as they are coherent.
Power Spectral Density: The measure of acoustic emission power in each resolution element of the power spectrum.
Resonance Frequency: The frequency at which an acoustic emission sensor is most sensitive. Resonant acoustic emission sensors have a clearly defined resonance frequency, but are usually sensitive to other frequencies.
RMS-to-DC Converter: An electronic device that converts an alternating signal to a voltage level proportional to the average power in the signal.
Shear Mode: A transverse mode of acoustic transmission, encountered only in solids.
Signal Filtering: Filtering a signal means attenuating frequencies outside a prescribed range. In acoustic emission work, band-pass filtering is used to improve the signal-to-noise ratio by attenuating noise outside the bandwidth of the sensor. Low-pass filtering is used to remove frequencies higher than the Nyquist frequency in order to prevent aliasing.
Transverse Mode: A mode of wave propagation where the displacement of the material is perpendicular to the direction of propagation. These modes are only encountered in solid materials.
White Noise: The characteristic of white noise is a power spectrum of uniform spectral density and is associated with purely random processes.

⟨1010⟩ ANALYTICAL DATA—INTERPRETATION AND TREATMENT

INTRODUCTION

This chapter provides information regarding acceptable practices for the analysis and consistent interpretation of data obtained from chemical and other analyses. Basic statistical approaches for evaluating data are described, and the treatment of outliers and comparison of analytical procedures are discussed in some detail.

[NOTE—It should not be inferred that the analysis tools mentioned in this chapter form an exhaustive list. Other, equally valid, statistical methods may be used at the discretion of the manufacturer and other users of this chapter.]

Assurance of the quality of pharmaceuticals is accomplished by combining a number of practices, including robust formulation design, validation, testing of starting materials, in-process testing, and final-product testing. Each of these practices is dependent on reliable test procedures. In the development process, test procedures are developed and validated to ensure that the manufactured products are thoroughly characterized. Final-product testing provides further assurance that the products are consistently safe, efficacious, and in compliance with their specifications.

Measurements are inherently variable. The variability of biological tests has long been recognized by the USP. For example, the need to consider this variability when analyzing biological test data is addressed in *Analysis of Biological Assays* ⟨1034⟩. The chemical analysis measurements commonly used to analyze pharmaceuticals are also inherently variable, although less so than those of the biological tests. However, in many instances the acceptance criteria are proportionally tighter, and thus, this smaller allowable variability has to be considered when analyzing data generated using analytical procedures. If the variability of a measurement is not characterized and stated along with the result of the measurement, then the data can only be interpreted in the most limited sense. For example, stating that the difference between the averages from two laboratories when testing a common set of samples is 10% has limited interpretation, in terms of how important such a difference is, without knowledge of the intralaboratory variability.

This chapter provides direction for scientifically acceptable treatment and interpretation of data. Statistical tools that may be helpful in the interpretation of analytical data are described. Many descriptive statistics, such as the mean and standard deviation, are in common use. Other statistical tools, such as outlier tests, can be performed using several different, scientifically valid approaches, and examples of these tools and their applications are also included. The framework within which the results from a compendial test are interpreted is clearly outlined in *General Notices and Requirements 7. Test Results*. Selected references that might be helpful in obtaining additional information on the statistical tools discussed in this chapter are listed in *Appendix 7* at the end of the chapter. USP does not endorse these citations, and they do not represent an exhaustive list. Further information about many of the methods cited in this chapter may also be found in most statistical textbooks.

PREREQUISITE LABORATORY PRACTICES AND PRINCIPLES

The sound application of statistical principles to laboratory data requires the assumption that such data have been collected in a traceable (i.e., documented) and unbiased manner. To ensure this, the following practices are beneficial.

Sound Record Keeping

Laboratory records are maintained with sufficient detail, so that other equally qualified analysts can reconstruct the experimental conditions and review the results obtained. When collecting data, the data should generally be obtained with more decimal places than the specification requires and rounded only after final calculations are completed as per the *General Notices and Requirements*.

Sampling Considerations

Effective sampling is an important step in the assessment of a quality attribute of a population. The purpose of sampling is to provide representative data (the sample) for estimating the properties of the population. How to attain such a sample depends entirely on the question that is to be answered by the sample data. In general, use of a random process is considered the most appropriate way of selecting a sample. Indeed, a random and independent sample is necessary to ensure that the resulting data produce valid estimates of the properties of the population. Generating a nonrandom or "convenience" sample risks the possibility that the estimates will be biased. The most straightforward type of random sampling is called *simple random sampling*, a process in which every unit of the population has an equal chance of appearing in the sample. However, sometimes this method of selecting a random sample is not optimal because it cannot guarantee equal representation among factors (i.e., time, location, machine) that may influence the critical properties of the population. For example, if it requires 12 hours to manufacture all of the units in a lot and it is vital that the sample be representative of the entire production process, then taking a simple random sample after the production has been completed may not be appropriate because there can be no guarantee that such a sample will contain a similar number of units made from every time period within the 12-hour process. Instead, it is better to take a *systematic random sample* whereby a unit is randomly selected from the production process at

systematically selected times or locations (e.g., sampling every 30 minutes from the units produced at that time) to ensure that units taken throughout the entire manufacturing process are included in the sample. Another type of random sampling procedure is needed if, for example, a product is filled into vials using four different filling machines. In this case it would be important to capture a random sample of vials from each of the filling machines. A *stratified random sample*, which randomly samples an equal number of vials from each of the four filling machines, would satisfy this requirement. Regardless of the reason for taking a sample (e.g., batch-release testing), a sampling plan should be established to provide details on how the sample is to be obtained to ensure that the sample is representative of the entirety of the population and that the resulting data have the required sensitivity. The optimal sampling strategy will depend on knowledge of the manufacturing and analytical measurement processes. Once the sampling scheme has been defined, it is likely that the sampling will include some element of random selection. Finally, there must be sufficient sample collected for the original analysis, subsequent verification analyses, and other analyses. Consulting a statistician to identify the optimal sampling strategy is recommended.

Tests discussed in the remainder of this chapter assume that simple random sampling has been performed.

Use of Reference Standards

Where *USP* or *NF* tests or assays call for the use of a USP Reference Standard, only those results obtained using the specified USP Reference Standard are conclusive for purposes of demonstrating conformance to such USP or NF standards. While USP standards apply at all times in the life of an article from production to expiration, USP does not specify when testing must be done, or any frequency of testing. Accordingly, users of *USP* and *NF* apply a range of strategies and practices to assure articles achieve and maintain conformance with compendial requirements, including when and if tested. Such strategies and practices can include the use of secondary standards traceable to the USP Reference Standard, to supplement or support any testing undertaken for the purpose of conclusively demonstrating conformance to applicable compendial standards. Because the assignment of a value to a standard is one of the most important factors that influences the accuracy of an analysis, it is critical that this be done correctly.

System Performance Verification

Verifying an acceptable level of performance for an analytical system in routine or continuous use can be a valuable practice. This may be accomplished by analyzing a control sample at appropriate intervals, or using other means, such as, variation among the standards, background signal-to-noise ratios, etc. Attention to the measured parameter, such as charting the results obtained by analysis of a control sample, can signal a change in performance that requires adjustment of the analytical system. An example of a controlled chart is provided in *Appendix 1*.

Procedure Validation

All analytical procedures are appropriately validated as specified in *Validation of Compendial Procedures* ⟨1225⟩. Analytical procedures published in the *USP–NF* have been validated and meet the Current Good Manufacturing Practices regulatory requirement for validation as established in the Code of Federal Regulations. A validated procedure may be used to test a new formulation (such as a new product, dosage form, or process intermediate) only after confirming that the new formulation does not interfere with the accuracy, linearity, or precision of the method. It may not be assumed that a validated procedure could correctly measure the active ingredient in a formulation that is different from that used in establishing the original validity of the procedure. [NOTE ON TERMINOLOGY—The definition of *accuracy* in ⟨1225⟩ and in ICH Q2 corresponds to unbiasedness only. In the International Vocabulary of Metrology (VIM) and documents of the International Organization for Standardization (ISO), *accuracy* has a different meaning. In ISO, *accuracy* combines the concepts of unbiasedness (termed *trueness*) and precision. This chapter follows the definition in ⟨1225⟩, which corresponds only to trueness.]

MEASUREMENT PRINCIPLES AND VARIATION

All measurements are, at best, estimates of the actual ("true" or "accepted") value for they contain random variability (also referred to as random error) and may also contain systematic variation (bias). Thus, the measured value differs from the actual value because of variability inherent in the measurement. If an array of measurements consists of individual results that are representative of the whole, statistical methods can be used to estimate informative properties of the entirety, and statistical tests are available to investigate whether it is likely that these properties comply with given requirements. The resulting statistical analyses should address the variability associated with the measurement process as well as that of the entity being measured. Statistical measures used to assess the direction and magnitude of these errors include the mean, standard deviation, and expressions derived therefrom, such as the percent coefficient of variation (%CV; also called the percent relative standard deviation, %RSD). The estimated variability can be used to calculate confidence intervals for the mean, or measures of variability, and tolerance intervals capturing a specified proportion of the individual measurements.

The use of statistical measures must be tempered with good judgment, especially with regard to representative sampling. Data should be consistent with the statistical assumptions used for the analysis. If one or more of these assumptions appear to

be violated, alternative methods may be required in the evaluation of the data. In particular, most of the statistical measures and tests cited in this chapter rely on the assumptions that the distribution of the entire population is represented by a normal distribution and that the analyzed sample is a representative subset of this population. The normal (or Gaussian) distribution is bell-shaped and symmetric about its center and has certain characteristics that are required for these tests to be valid. The data may not always be expected to be normally distributed and may require a transformation to better fit a normal distribution. For example, there exist variables that have distributions with longer right tails than left. Such distributions can often be made approximately normal through a log transformation. An alternative approach would be to use "distribution-free" or "nonparametric" statistical procedures that do not require that the shape of the population be that of a normal distribution. When the objective is to construct a confidence interval for the mean or for the difference between two means, for example, then the normality assumption is not as important because of the central limit theorem. However, one must verify normality of data to construct valid confidence intervals for standard deviations and ratios of standard deviations, perform some outlier tests, and construct valid statistical tolerance limits. In the latter case, normality is a critical assumption. Simple graphical methods, such as dot plots, histograms, and normal probability plots, are useful aids for investigating this assumption.

A single analytical measurement may be useful in quality assessment if the sample is from a whole that has been prepared using a well-validated, documented process and if the analytical errors are well known. The obtained analytical result may be qualified by including an estimate of the associated errors. There may be instances when one might consider the use of averaging because the variability associated with an average value is always reduced as compared to the variability in the individual measurements. The choice of whether to use individual measurements or averages will depend upon the use of the measure and its variability. For example, when multiple measurements are obtained on the same sample aliquot, such as from multiple injections of the sample in an HPLC method, it is generally advisable to average the resulting data for the reason discussed above.

Variability is associated with the dispersion of observations around the center of a distribution. The most commonly used statistic to measure the center is the sample mean ($\bar{x}$):

$$\bar{x} = \frac{\sum_{i=1}^{n} x_1}{n} = \frac{x_1 + x_2 + \ldots + x_n}{n}$$

Analytical procedure variability can be estimated in various ways. The most common and useful assessment of a procedure's variability is the determination of the standard deviation based on repeated independent[1] measurements of a sample. The sample standard deviation, *s*, is calculated by the formula:

$$s = \sqrt{\sum_{i=1}^{n} \left(x_i - \bar{x}\right)^2 / (n-1)}$$

in which x_i is the individual measurement in a set of *n* measurements; and $\bar{x}$ is the mean of all the measurements. The percent relative standard deviation (%RSD) is then calculated as:

$$\%RSD = \frac{s}{\bar{x}} \cdot 100\%$$

and expressed as a percentage. If the data requires log transformation to achieve normality (e.g., for biological assays), then alternative methods are available.[2]

A precision study should be conducted to provide a better estimate of procedure variability. The precision study may be designed to determine intermediate precision (which includes the components of both "between run" and "within-run" varia-

[1] Multiple measurements (or, equivalently, the experimental errors associated with the multiple measurements) are independent from one another when they can be assumed to represent a random sample from the population. In such a sample, the magnitude of one measurement is not influenced by, nor does it influence the magnitude of, any other measurement. Lack of independence implies the measurements are correlated over time or space. Consider the example of a 96-well microtiter plate. Suppose that whenever the unknown causes that produce experimental error lead to a low result (negative error) when a sample is placed in the first column and these same causes would also lead to a low result for a sample placed in the second column, then the two resulting measurements would not be statistically independent. One way to avoid such possibilities would be to randomize the placement of the samples on the plate.

[2] When data have been log (base e) transformed to achieve normality, the %RSD is:

$$\%RSD = 100\% \cdot \sqrt{e^{s^2} - 1}$$

This can be reasonably approximated by:

$$\%RSD = 100\% \cdot (e^{s} - 1)$$

where *s* is the standard deviation of the log (base e) transformed data.

General Chapters

bility) and repeatability ("within-run" variability). The intermediate precision studies should allow for changes in the experimental conditions that might be expected, such as different analysts, different preparations of reagents, different days, and different instruments. To perform a precision study, the test is repeated several times. Each run must be completely independent of the others to provide accurate estimates of the various components of variability. In addition, within each run, replicates are made in order to estimate repeatability. See an example of a precision study in *Appendix 2*.

A confidence interval for the mean may be considered in the interpretation of data. Such intervals are calculated from several data points using the sample mean ($\bar{x}$) and sample standard deviation(s) according to the formula:

$$\left(\bar{X} - t_{\alpha/2,\, n-1}\frac{s}{\sqrt{n}},\ \bar{X} + t_{\alpha/2,\, n-1}\frac{s}{\sqrt{n}}\right)$$

in which $t_{\alpha/2,\, n-1}$ is a statistical number dependent upon the sample size (n), the number of degrees of freedom ($n - 1$), and the desired confidence level ($1 - \alpha$). Its values are obtained from published tables of the Student *t*-distribution. The confidence interval provides an estimate of the range within which the "true" population mean (μ) falls, and it also evaluates the reliability of the sample mean as an estimate of the true mean. If the same experimental set-up were to be replicated over and over and a 95% (for example) confidence interval for the true mean is calculated each time, then 95% of such intervals would be expected to contain the true mean, μ. One cannot say with certainty whether or not the confidence interval derived from a specific set of data actually collected contains μ. However, assuming the data represent mutually independent measurements randomly generated from a normally distributed population, the procedure used to construct the confidence interval guarantees that 95% of such confidence intervals contain μ. Note that it is important to define the population appropriately so that all relevant sources of variation are captured. [NOTE ON TERMINOLOGY—In the documents of the International Organization for Standardization (ISO), different terminology is used for some of the concepts described here. The term $s/\sqrt{n}$, which is commonly called the standard error of the mean, is called the standard uncertainty in ISO documents. The term $t_{\alpha/2,\, n-1}\ S/\sqrt{n}$ is called the expanded uncertainty, and $t_{\alpha/2,\, n-1}$ is called the coverage factor, by ISO. If the standard deviation is found by combining estimates of variability from multiple sources, it is called the combined standard uncertainty. Some of these sources could have nonstatistical estimates of uncertainty, called Type B uncertainties, such as uncertainty in calibration of a balance.]

OUTLYING RESULTS

Occasionally, observed analytical results are very different from those expected. Aberrant, anomalous, contaminated, discordant, spurious, suspicious or wild observations; and flyers, rogues, and mavericks are properly called outlying results. Like all laboratory results, these outliers must be documented, interpreted, and managed. Such results may be accurate measurements of the entity being measured, but are very different from what is expected. Alternatively, due to an error in the analytical system, the results may not be typical, even though the entity being measured is typical. When an outlying result is obtained, systematic laboratory and, in certain cases, process investigations of the result are conducted to determine if an assignable cause for the result can be established. Factors to be considered when investigating an outlying result include—but are not limited to—human error, instrumentation error, calculation error, and product or component deficiency. If an assignable cause that is not related to a product or component deficiency can be identified, then retesting may be performed on the same sample, if possible, or on a new sample. The precision and accuracy of the procedure, the USP Reference Standard, process trends, and the specification limits should all be examined. Data may be invalidated, based on this documented investigation, and eliminated from subsequent calculations.

If no documentable, assignable cause for the outlying laboratory result is found, the result may be tested, as part of the overall investigation, to determine whether it is an outlier.

However, careful consideration is warranted when using these tests. Two types of errors may occur with outlier tests: (a) labeling observations as outliers when they really are not; and (b) failing to identify outliers when they truly exist. Any judgment about the acceptability of data in which outliers are observed requires careful interpretation.

"Outlier labeling" is informal recognition of suspicious laboratory values that should be further investigated with more formal methods. The selection of the correct outlier identification technique often depends on the initial recognition of the number and location of the values. Outlier labeling is most often done visually with graphical techniques. "Outlier identification" is the use of statistical significance tests to confirm that the values are inconsistent with the known or assumed statistical model.

When used appropriately, outlier tests are valuable tools for pharmaceutical laboratories. Several tests exist for detecting outliers. Examples illustrating three of these procedures, the Extreme Studentized Deviate (ESD) Test, Dixon's Test, and Hampel's Rule, are presented in *Appendix 3*.

Choosing the appropriate outlier test will depend on the sample size and distributional assumptions. Many of these tests (e.g., the ESD Test) require the assumption that the data generated by the laboratory on the test results can be thought of as a random sample from a population that is normally distributed, possibly after transformation. If a transformation is made to the data, the outlier test is applied to the transformed data. Common transformations include taking the logarithm or square root of the data. Other approaches to handling single and multiple outliers are available and can also be used. These include tests that use robust measures of central tendency and spread, such as the median and median absolute deviation and exploratory data analysis (EDA) methods. "Outlier accommodation" is the use of robust techniques, such as tests based on the order or

rank of each data value in the data set instead of the actual data value, to produce results that are not adversely influenced by the presence of outliers. The use of such methods reduces the risks associated with both types of error in the identification of outliers.

"Outlier rejection" is the actual removal of the identified outlier from the data set. However, an outlier test cannot be the sole means for removing an outlying result from the laboratory data. An outlier test may be useful as part of the evaluation of the significance of that result, along with other data. Outlier tests have no applicability in cases where the variability in the product is what is being assessed, such as content uniformity, dissolution, or release-rate determination. In these applications, a value determined to be an outlier may in fact be an accurate result of a nonuniform product. All data, especially outliers, should be kept for future review. Unusual data, when seen in the context of other historical data, are often not unusual after all but reflect the influences of additional sources of variation.

In summary, the rejection or retention of an apparent outlier can be a serious source of bias. The nature of the testing as well as scientific understanding of the manufacturing process and analytical procedure have to be considered to determine the source of the apparent outlier. An outlier test can never take the place of a thorough laboratory investigation. Rather, it is performed only when the investigation is inconclusive and no deviations in the manufacture or testing of the product were noted. Even if such statistical tests indicate that one or more values are outliers, they should still be retained in the record. Including or excluding outliers in calculations to assess conformance to acceptance criteria should be based on scientific judgment and the internal policies of the manufacturer. It is often useful to perform the calculations with and without the outliers to evaluate their impact.

Outliers that are attributed to measurement process mistakes should be reported (i.e., footnoted), but not included in further statistical calculations. When assessing conformance to a particular acceptance criterion, it is important to define whether the reportable result (the result that is compared to the limits) is an average value, an individual measurement, or something else. If, for example, the acceptance criterion was derived for an average, then it would not be statistically appropriate to require individual measurements to also satisfy the criterion because the variability associated with the average of a series of measurements is smaller than that of any individual measurement.

COMPARISON OF ANALYTICAL PROCEDURES

It is often necessary to compare two procedures to determine if their average results or their variabilities differ by an amount that is deemed important. The goal of a procedure comparison experiment is to generate adequate data to evaluate the equivalency of the two procedures over a range of values. Some of the considerations to be made when performing such comparisons are discussed in this section.

Precision

Precision is the degree of agreement among individual test results when the analytical procedure is applied repeatedly to a homogeneous sample. For an alternative procedure to be considered to have "comparable" precision to that of a current procedure, its precision (see *Analytical Performance Characteristics* in ⟨1225⟩, *Validation*) must not be worse than that of the current procedure by an amount deemed important. A decrease in precision (or increase in variability) can lead to an increase in the number of results expected to fail required specifications. On the other hand, an alternative procedure providing improved precision is acceptable.

One way of comparing the precision of two procedures is by estimating the variance for each procedure (the sample variance, s^2, is the square of the sample standard deviation) and calculating a one-sided upper confidence interval for the ratio of (true) variances, where the ratio is defined as the variance of the alternative procedure to that of the current procedure. An example, with this assumption, is outlined in *Appendix 4*. The one-sided upper confidence limit should be compared to an upper limit deemed acceptable, *a priori*, by the analytical laboratory. If the one-sided upper confidence limit is less than this upper acceptable limit, then the precision of the alternative procedure is considered acceptable in the sense that the use of the alternative procedure will not lead to an important loss in precision. Note that if the one-sided upper confidence limit is less than one, then the alternative procedure has been shown to have improved precision relative to the current procedure.

The confidence interval method just described is preferred to applying the two-sample *F*-test to test the statistical significance of the ratio of variances. To perform the two-sample *F*-test, the calculated ratio of sample variances would be compared to a critical value based on tabulated values of the *F* distribution for the desired level of confidence and the number of degrees of freedom for each variance. Tables providing *F*-values are available in most standard statistical textbooks. If the calculated ratio exceeds this critical value, a statistically significant difference in precision is said to exist between the two procedures. However, if the calculated ratio is less than the critical value, this does not prove that the procedures have the same or equivalent level of precision; but rather that there was not enough evidence to prove that a statistically significant difference did, in fact, exist.

Accuracy

Comparison of the accuracy (see *Analytical Performance Characteristics* in 〈1225〉, *Validation*) of procedures provides information useful in determining if the new procedure is equivalent, on the average, to the current procedure. A simple method for making this comparison is by calculating a confidence interval for the difference in true means, where the difference is estimated by the sample mean of the alternative procedure minus that of the current procedure.

The confidence interval should be compared to a lower and upper range deemed acceptable, *a priori*, by the laboratory. If the confidence interval falls entirely within this acceptable range, then the two procedures can be considered equivalent, in the sense that the average difference between them is not of practical concern. The lower and upper limits of the confidence interval only show how large the true difference between the two procedures may be, not whether this difference is considered tolerable. Such an assessment can be made only within the appropriate scientific context. This approach is often referred to as TOST (two one-sided tests; see *Appendix 6*)

The confidence interval method just described is preferred to the practice of applying a *t*-test to test the statistical significance of the difference in averages. One way to perform the *t*-test is to calculate the confidence interval and to examine whether or not it contains the value zero. The two procedures have a statistically significant difference in averages if the confidence interval excludes zero. A statistically significant difference may not be large enough to have practical importance to the laboratory because it may have arisen as a result of highly precise data or a larger sample size. On the other hand, it is possible that no statistically significant difference is found, which happens when the confidence interval includes zero, and yet an important practical difference cannot be ruled out. This might occur, for example, if the data are highly variable or the sample size is too small. Thus, while the outcome of the *t*-test indicates whether or not a statistically significant difference has been observed, it is not informative with regard to the presence or absence of a difference of practical importance.

Determination of Sample Size

Sample size determination is based on the comparison of the accuracy and precision of the two procedures[3] and is similar to that for testing hypotheses about average differences in the former case and variance ratios in the latter case, but the meaning of some of the input is different. The first component to be specified is δ, the largest acceptable difference between the two procedures that, if achieved, still leads to the conclusion of equivalence. That is, if the two procedures differ by no more than δ, on the average, they are considered acceptably similar. The comparison can be two-sided as just expressed, considering a difference of δ in either direction, as would be used when comparing means. Alternatively, it can be one-sided as in the case of comparing variances where a decrease in variability is acceptable and equivalency is concluded if the ratio of the variances (new/current, as a proportion) is not more than $1.0 + \delta$. A researcher will need to state δ based on knowledge of the current procedure and/or its use, or it may be calculated. One consideration, when there are specifications to satisfy, is that the new procedure should not differ by so much from the current procedure as to risk generating out-of-specification results. One then chooses δ to have a low likelihood of this happening by, for example, comparing the distribution of data for the current procedure to the specification limits. This could be done graphically or by using a tolerance interval, an example of which is given in *Appendix 5*. In general, the choice for δ must depend on the scientific requirements of the laboratory.

The next two components relate to the probability of error. The data could lead to a conclusion of similarity when the procedures are unacceptably different (as defined by δ). This is called a false positive or Type I error. The error could also be in the other direction; that is, the procedures could be similar, but the data do not permit that conclusion. This is a false negative or Type II error. With statistical methods, it is not possible to completely eliminate the possibility of either error. However, by choosing the sample size appropriately, the probability of each of these errors can be made acceptably small. The acceptable maximum probability of a Type I error is commonly denoted as α and is commonly taken as 5%, but may be chosen differently. The desired maximum probability of a Type II error is commonly denoted by β. Often, β is specified indirectly by choosing a desired level of $1 - \beta$, which is called the "power" of the test. In the context of equivalency testing, power is the probability of correctly concluding that two procedures are equivalent. Power is commonly taken to be 80% or 90% (corresponding to a β of 20% or 10%), though other values may be chosen. The protocol for the experiment should specify δ, α, and power. The sample size will depend on all of these components. An example is given in *Appendix 5*. Although *Appendix 5* determines only a single value, it is often useful to determine a table of sample sizes corresponding to different choices of δ, α, and power. Such a table often allows for a more informed choice of sample size to better balance the competing priorities of resources and risks (false negative and false positive conclusions).

APPENDICES

Appendix 1: Control Charts

Figure 1 illustrates a control chart for individual values. There are several different methods for calculating the upper control limit (UCL) and lower control limit (LCL). One method involves the moving range, which is defined as the absolute difference

[3] In general, the sample size required to compare the precision of two procedures will be greater than that required to compare the accuracy of the procedures.

between two consecutive measurements ($x_i - x_{i-1}$). These moving ranges are averaged ($\overline{\mathrm{MR}}$) and used in the following formulas:

$$\mathrm{UCL} = \bar{x} + 3\frac{\overline{\mathrm{MR}}}{d_2}$$

$$\mathrm{LCL} = \bar{x} - 3\frac{\overline{\mathrm{MR}}}{d_2}$$

where $\bar{x}$ is the sample mean, and d_2 is a constant commonly used for this type of chart and is based on the number of observations associated with the moving range calculation. Where $n = 2$ (two consecutive measurements), as here, $d_2 = 1.128$. For the example in *Figure 1*, the $\overline{\mathrm{MR}}$ was 1.7:

$$\mathrm{UCL} = 102.0 + 3\frac{1.7}{1.128} = 106.5$$

$$\mathrm{LCL} = 102.0 - 3\frac{1.7}{1.128} = 97.5$$

Other methods exist that are better able to detect small shifts in the process mean, such as the cumulative sum (also known as "CUSUM") and exponentially weighted moving average ("EWMA").

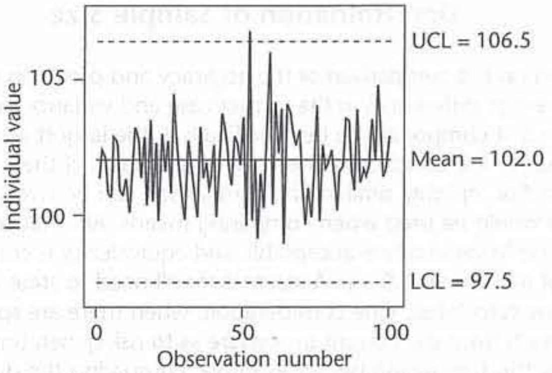

Figure 1. Individual X or individual measurements control chart for control samples. In this particular example, the mean for all the samples ($\bar{x}$) is 102.0, the UCL is 106.5, and the LCL is 97.5.

Appendix 2: Precision Study

Table 1 displays data collected from a precision study. This study consisted of five independent runs and, within each run, results from three replicates were collected.

Table 1. Data from a Precision Study

Replicate Number	Run Number 1	2	3	4	5
1	100.70	99.46	99.96	101.80	101.91
2	101.05	99.37	100.17	102.16	102.00
3	101.15	99.59	101.01	102.44	101.67
Mean	100.97	99.47	100.38	102.13	101.86
Standard deviation	0.236	0.111	0.556	0.321	0.171
%RSD[a]	0.234%	0.111%	0.554%	0.314%	0.167%

[a] %RSD (percent relative standard deviation) = 100% × (standard deviation/mean)

Table 1A. Analysis of Variance Table for Data Presented in *Table 1*

Source of Variation	Degrees of Freedom (df)	Sum of Squares (SS)	Mean Squares[a] (MS)	$F = \mathrm{MS_B}/\mathrm{MS_W}$
Between runs	4	14.200	3.550	34.886

[a] The Mean Squares Between ($\mathrm{MS_B}$) = $\mathrm{SS_{Between}}/\mathrm{df_{Between}}$ and the Mean Squares Within ($\mathrm{MS_W}$) = $\mathrm{SS_{Within}}/\mathrm{df_{Within}}$

Table 1A. Analysis of Variance Table for Data Presented in *Table 1 (Continued)*

Source of Variation	Degrees of Freedom (df)	Sum of Squares (SS)	Mean Squares[a] (MS)	$F = MS_B/MS_W$
Within runs	10	1.018	0.102	
Total	14	15.217		

[a] The Mean Squares Between (MS_B) = $SS_{Between}/df_{Between}$ and the Mean Squares Within (MS_W) = SS_{Within}/df_{Within}

Performing an analysis of variance (ANOVA) on the data in *Table 1* leads to the ANOVA table (*Table 1A*). Because there were an equal number of replicates per run in the precision study, values for $Variance_{Run}$ and $Variance_{Rep}$ can be derived from the ANOVA table in a straightforward manner. The equations below calculate the variability associated with both the runs and the replicates where the MS_{within} represents the "error" or "within-run" mean square, and $MS_{between}$ represents the "between-run" mean square.

$$Variance_{Rep} = MS_{within} = 0.102$$

$$Variance_{Run} = \frac{MS_{between} - MS_{within}}{\#\,of\,reps\,per\,run} = \frac{3.550 - 0.102}{3} = 1.149$$

[NOTE—It is common practice to use a value of 0 for $Variance_{Run}$ when the calculated value is negative.] Estimates can still be obtained with unequal replication, but the formulas are more complex. Many statistical software packages can easily handle unequal replication. Studying the relative magnitude of the two variance components is important when designing and interpreting a precision study. The insight gained can be used to focus any ongoing procedure improvement effort and, more important, it can be used to ensure that procedures are capable of supporting their intended uses. By carefully defining what constitutes a result (i.e., reportable value), one harnesses the power of averaging to achieve virtually any desired precision. That is, by basing the reportable value on an average across replicates and/or runs, rather than on any single result, one can reduce the %RSD, and reduce it in a predictable fashion.

Table 2 shows the computed variance and %RSD of the mean (i.e., of the reportable value) for different combinations of number of runs and number of replicates per run using the following formulas:

$$\text{Variance of the mean} = \frac{Variance_{Run}}{(\#\text{ of runs})} + \frac{Variance_{rep}}{(\#\text{ of runs})(\#\text{ of reps per run})}$$

$$\text{Standard deviation of the mean} = \sqrt{\text{Variance of the mean}}$$

$$RSD = \frac{\text{Standard deviation of the mean}}{\text{Average of all results}} \times 100\%$$

For example, the *Variance of the mean, Standard deviation of the mean,* and %RSD of a test involving two runs and three replicates per each run are 0.592, 0.769, and 0.76% respectively, as shown below.

$$\text{Variance of the mean} = \frac{1.149}{2} + \frac{0.102}{(2 \cdot 3)} = 0.592$$

$$\text{Standard deviation of the mean} = \sqrt{0.592} = 0.769$$

$$RSD = (0.769/100.96) \times 100\% = 0.76\%$$

where 100.96 is the mean for all the data points in *Table 1*. As illustrated in *Table 2*, increasing the number of runs from one to two provides a more dramatic reduction in the variability of the reportable value than does increasing the number of replicates per run.

No distributional assumptions were made on the data in *Table 1*, as the purpose of this Appendix is to illustrate the calculations involved in a precision study.

Table 2. The Predicted Impact of the Test Plan (No. of Runs and No. of Replicates per Run) on the Precision of the Mean

No. of Runs	No. of Replicates per Run	Variance of the Mean	SD of the Mean	% RSD[a]
1	1	1.251	1.118	1.11
1	2	1.200	1.095	1.09
1	3	1.183	1.088	1.08
2	1	0.625	0.791	0.78
2	2	0.600	0.775	0.77

[a] A mean value of 100.96, based on the 15 data points presented in *Table 1*, was used (as the divisor) to compute the %RSD.

Table 2. The Predicted Impact of the Test Plan (No. of Runs and No. of Replicates per Run) on the Precision of the Mean *(Continued)*

No. of Runs	No. of Replicates per Run	Variance of the Mean	SD of the Mean	% RSD[a]
2	3	0.592	0.769	0.76

[a] A mean value of 100.96, based on the 15 data points presented in *Table 1*, was used (as the divisor) to compute the %RSD.

Appendix 3: Examples of Outlier Tests for Analytical Data

Given the following set of 10 measurements: 100.0, 100.1, 100.3, 100.0, 99.7, 99.9, 100.2, 99.5, 100.0, and 95.7 (mean = 99.5, standard deviation = 1.369), are there any outliers?

GENERALIZED EXTREME STUDENTIZED DEVIATE (ESD) TEST

This is a modified version of the ESD Test that allows for testing up to a previously specified number, *r*, of outliers from a normally distributed population. For the detection of a single outlier ($r = 1$), the generalized ESD procedure is also known as Grubb's test. Grubb's test is not recommended for the detection of multiple outliers. Let *r* equal 2, and *n* equal 10.

Stage 1 (n = 10): Normalize each result by subtracting the mean from each value and dividing this difference by the standard deviation (see *Table 3*).[4]

Table 3. Generalized ESD Test Results

	n = 10		*n* = 9	
	Data	**Normalized**	**Data**	**Normalized**
	100.3	+0.555	100.3	+1.361
	100.2	+0.482	100.2	+0.953
	100.1	+0.409	100.1	+0.544
	100.0	+0.336	100.0	+0.136
	100.0	+0.336	100.0	+0.136
	100.0	+0.336	100.0	+0.136
	99.9	+0.263	99.9	−0.272
	99.7	+0.117	99.7	−1.089
	99.5	−0.029	99.5	−1.905
	95.7	−2.805		
Mean =	99.54		99.95	
SD =	1.369		0.245	

Take the absolute value of these results, select the maximum value ($R_1 = 2.805$), and compare it to a previously specified tabled critical value λ_1 (2.290) based on the selected significance level (for example, 5%). The maximum value is larger than the tabled value and is identified as being inconsistent with the remaining data. Sources for λ-values are included in many statistical textbooks. Caution should be exercised when using any statistical table to ensure that the correct notations (i.e., level of acceptable error) are used when extracting table values.

Stage 2 (n = 9): Remove the observation corresponding to the maximum absolute normalized result from the original data set, so that *n* is now 9. Again, find the mean and standard deviation (*Table 3*, right two columns), normalize each value, and take the absolute value of these results. Find the maximum of the absolute values of the 9 normalized results ($R_2 = 1.905$), and compare it to λ_2 (2.215). The maximum value is not larger than the tabled value.

Conclusion: The result from the first stage, 95.7, is declared to be an outlier, but the result from the second stage, 99.5, is not an outlier.

DIXON-TYPE TESTS

Dixon's Test can be one-sided or two-sided, depending on an a priori decision as to whether outliers will be considered on one side only. As with the ESD Test, Dixon's Test assumes that the data, in the absence of outliers, come from a single normal population. Following the strategy used for the ESD Test, we proceed as if there were no a priori decision as to side, and so use a two-sided Dixon's Test. From examination of the example data, we see that it is the two smallest that are to be tested as outliers. Dixon provides for testing for two outliers simultaneously; however, these procedures are beyond the scope of this Appendix. The stepwise procedure discussed below is not an exact procedure for testing for the second outlier, because the

[4] The difference between each value and the mean is termed the residual. Other Studentized residual outlier tests exist where the residual, instead of being divided by the standard deviation, can be divided by the standard deviation times the square root of $n - 1$ divided by *n*.

result of the second test is conditional upon the first. And because the sample size is also reduced in the second stage, the end result is a procedure that usually lacks the sensitivity of Dixon's exact procedures.

Stage 1 (n = 10): The results are ordered on the basis of their magnitude (i.e., X_n is the largest observation, X_{n-1} is the second largest, etc., and X_1 is the smallest observation). Dixon's Test has different ratios based on the sample size (in this example, with $n = 10$), and to declare X_1 an outlier, the following ratio, r_{11}, is calculated by the formula:

$$r_{11} = \frac{X_2 - X_1}{X_{n-1} - X_1}$$

A different ratio would be employed if the largest data point was tested as an outlier. The r_{11} result is compared to an $r_{11,\,0.05}$ value in a table of critical values. If r_{11} is greater than $r_{11,\,0.05}$, then it is declared an outlier. For the above set of data, r_{11} = (99.5 – 95.7)/(100.2 – 95.7) = 0.84. This ratio is greater than $r_{11,\,0.05}$, which is 0.52979 at the 5% significance level for a two-sided Dixon's Test. Sources for $r_{11,\,0.05}$ values are included in many statistical textbooks.[5]

Stage 2: Remove the smallest observation from the original data set, so that *n* is now 9. The same r_{11} equation is used, but a new critical $r_{11,\,0.05}$ value for $n = 9$ is needed ($r_{11,\,0.05} = 0.56420$). Now r_{11} = (99.7 – 99.5)/(100.2 – 99.5) = 0.29, which is less than $r_{11,\,0.05}$ and not significant at the 5% level.

Conclusion: Therefore, 95.7 is declared to be an outlier but 99.5 is not an outlier.

HAMPEL'S RULE

Step 1: The first step in applying Hampel's Rule is to normalize the data. However, instead of subtracting the mean from each data point and dividing the difference by the standard deviation, the median is subtracted from each data value and the resulting differences are divided by MAD (see below). The calculation of MAD is done in three stages. First, the median is subtracted from each data point. Next, the absolute values of the differences are obtained. These are called the *absolute deviations*. Finally, the median of the absolute deviations is calculated and multiplied by the constant 1.483 to obtain MAD.[6]

Step 2: The second step is to take the absolute value of the normalized data. Any such result that is greater than 3.5 is declared to be an outlier. *Table 4* summarizes the calculations.

The value of 95.7 is again identified as an outlier. This value can then be removed from the data set and Hampel's Rule re-applied to the remaining data. The resulting table is displayed as *Table 5*. Similar to the previous examples, 99.5 is not considered an outlier.

Table 4. Test Results Using Hampel's Rule

	n = 10			
	Data	**Deviations from the Median**	**Absolute Deviations**	**Absolute Normalized**
	100.3	0.3	0.3	1.35
	100.2	0.2	0.2	0.90
	100.1	0.1	0.1	0.45
	100	0	0	0
	100	0	0	0
	100	0	0	0
	99.9	−0.1	0.1	0.45
	99.7	−0.3	0.3	1.35
	99.5	−0.5	0.5	2.25
	95.7	−4.3	4.3	19.33
Median =	100		0.15	
MAD =			0.22	

Table 5. Test Results of Re-Applied Hampel's Rule

	n = 9			
	Data	**Deviations from the Median**	**Absolute Deviations**	**Absolute Normalized**
	100.3	0.3	0.3	2.02
	100.2	0.2	0.2	1.35

[5] The critical values for *r* in this example are taken from Reference 2 in *Appendix 7, Outlier Tests.*

[6] Assuming an underlying normal distribution, 1.483 is a constant used so that the resulting MAD is a consistent estimator of the population standard deviation. This means that as the sample size gets larger, MAD gets closer to the population standard deviation.

Table 5. Test Results of Re-Applied Hampel's Rule *(Continued)*

$n = 9$				
	Data	**Deviations from the Median**	**Absolute Deviations**	**Absolute Normalized**
	100.1	0.1	0.1	0.67
	100	0	0	0
	100	0	0	0
	100	0	0	0
	99.9	−0.1	0.1	0.67
	99.7	−0.3	0.3	2.02
	99.5	−0.5	0.5	3.37
Median =	100		0.1	
MAD =			0.14	

Appendix 4: Comparison of Procedures—Precision

The following example illustrates the calculation of a 90% confidence interval for the ratio of (true) variances for the purpose of comparing the precision of two procedures. It is assumed that the underlying distribution of the sample measurements are well-characterized by normal distributions. For this example, assume the laboratory will accept the alternative procedure if its precision (as measured by the variance) is no more than four-fold greater than that of the current procedure.

To determine the appropriate sample size for precision, one possible method involves a trial and error approach using the following formula:

$$\text{Power} = \Pr\left[F > \frac{1}{4} F_{\alpha, n-1, n-1}\right]$$

where n is the smallest sample size required to give the desired power, which is the likelihood of correctly claiming the alternative procedure has acceptable precision when in fact the two procedures have equal precision; α is the risk of wrongly claiming the alternative procedure has acceptable precision; and the 4 is the allowed upper limit for an increase in variance. F-values are found in commonly available tables of critical values of the F-distribution. $F_{\alpha, n-1, n-1}$ is the upper α percentile of an F-distribution with $n - 1$ numerator and $n - 1$ denominator degrees of freedom; that is, the value exceeded with probability α. Suppose initially the laboratory guessed a sample size of 11 per procedure was necessary (10 numerator and denominator degrees of freedom); the power calculation would be as follows:[7]

$$\Pr[F > {}^1\!/\!_4 F_{\alpha, n-1, n-1}] = \Pr[F > {}^1\!/\!_4 F_{.05, 10, 10}]$$
$$= \Pr[F > (2.978/4)] = 0.6751$$

In this case the power was only 68%; that is, even if the two procedures had exactly equal variances, with only 11 samples per procedure, there is only a 68% chance that the experiment will lead to data that permit a conclusion of no more than a four-fold increase in variance. Most commonly, sample size is chosen to have at least 80% power, with choices of 90% power or higher also used. To determine the appropriate sample size, various numbers can be tested until a probability is found that exceeds the acceptable limit (e.g., power >0.90). For example, the power determination for sample sizes of 12–20 are displayed in *Table 6*. In this case, the initial guess at a sample size of 11 was not adequate for comparing precision, but 15 samples per procedure would provide a large enough sample size if 80% power were desired, or 20 per procedure for 90% power.

Table 6. Power Determinations for Various Sample Sizes (Specific to the Example in *Appendix 4***)**

Sample Size	**$\Pr[F > {}^1\!/\!_4 F_{0.05, n-1, n-1}]$**
12	0.7145
13	0.7495
14	0.7807
15	0.8083
16	0.8327
17	0.8543
18	0.8732
19	0.8899

[7] This could be calculated using a computer spreadsheet. For example, in Microsoft® Excel the formula would be: FDIST((*R*/*A*)*FINV(alpha, *n* − 1, *n* − 1), *n* − 1, *n* − 1), where *R* is the ratio of variances at which to determine power (e.g., *R* = 1, which was the value chosen in the power calculations provided in *Table 6*) and *A* is the maximum ratio for acceptance (e.g., *A* = 4). Alpha is the significance level, typically 0.05.

Table 6. Power Determinations for Various Sample Sizes (Specific to the Example in *Appendix 4***)** *(Continued)*

Sample Size	$\Pr[F > {}^{1}/_{4}F_{0.05,\,n-1,\,n-1}]$
20	0.9044

Typically the sample size for precision comparisons will be larger than for accuracy comparisons. If the sample size for precision is so large as to be impractical for the laboratory to conduct the study, there are some options. The first is to reconsider the choice of an allowable increase in variance. For larger allowable increases in variance, the required sample size for a fixed power will be smaller. Another alternative is to plan an interim analysis at a smaller sample size, with the possibility of proceeding to a larger sample size if needed. In this case, it is strongly advisable to seek professional help from a statistician.

Now, suppose the laboratory opts for 90% power and obtains the results presented in *Table 7* based on the data generated from 20 independent runs per procedure.

$$\text{Ratio} = \text{alternative procedure variance/current procedure variance} = 45.0/25.0 = 1.8$$

$$\text{Lower limit of confidence interval} = \text{ratio}/F_{.05} = 1.8/2.168 = 0.83$$

$$\text{Upper limit of confidence interval} = \text{ratio}/F_{.95} = 1.8/0.461 = 3.90$$

Table 7. Example of Measures of Variance for Independent Runs (Specific to the Example in *Appendix 4***)**

Procedure	Variance (standard deviation)	Sample Size	Degrees of Freedom
Alternative	45.0 (6.71)	20	19
Current	25.0 (5.00)	20	19

For this application, a 90% (*two*-sided) confidence interval is used when a 5% *one*-sided test is sought. The test is one-sided, because only an increase in standard deviation of the alternative procedure is of concern. Some care must be exercised in using two-sided intervals in this way, as they must have the property of equal tails—most common intervals have this property. Because the one-side upper confidence limit, 3.90, is less than the allowed limit, 4.0, the study has demonstrated that the alternative procedure has acceptable precision. If the same results had been obtained from a study with a sample size of 15—as if 80% power had been chosen—the laboratory would not be able to conclude that the alternative procedure had acceptable precision (upper confidence limit of 4.47).

Appendix 5: Comparison of Procedures—Determining the Largest Acceptable Difference, δ, Between Two Procedures

This Appendix describes one approach to determining the difference, δ, between two procedures (alternative-current), a difference that, if achieved, still leads to the conclusion of equivalence between the two procedures. Without any other prior information to guide the laboratory in the choice of δ, it is a reasonable way to proceed. Sample size calculations under various scenarios are discussed in this Appendix.

TOLERANCE INTERVAL DETERMINATION

Suppose the process mean and the standard deviation are both unknown, but a sample of size 50 produced a mean and standard deviation of 99.5 and 2.0, respectively. These values were calculated using the last 50 results generated by this specific procedure for a particular (control) sample. Given this information, the tolerance limits can be calculated by the following formula:

$$\bar{x} \pm K_s$$

in which $\bar{x}$ is the mean; *s* is the standard deviation; and *K* is based on the level of confidence, the proportion of results to be captured in the interval, and the sample size, *n*. Tables providing *K* values are available. In this example, the value of *K* required to enclose 95% of the population with 95% confidence for 50 samples is 2.382.[8] The tolerance limits are calculated as follows:

$$99.5 \pm 2.382 \times 2.0$$

hence, the tolerance interval is (94.7, 104.3).

COMPARISON OF THE TOLERANCE LIMITS TO THE SPECIFICATION LIMITS

Assume the specification interval for this procedure is (90.0, 110.0) and the process mean and standard deviation have not changed since this interval was established. The following quantities can be defined: the lower specification limit (LSL) is 90.0,

[8] There are existing tables of tolerance factors that give approximate values and thus differ slightly from the values reported here.

the upper specification limit (USL) is 110.0, the lower tolerance limit (LTL) is 94.7, and the upper tolerance limit (UTL) is 104.3. Calculate the acceptable difference, (δ), in the following manner:

$$A = LTL - LSL \text{ for } LTL \geq LSL$$

$$(A = 94.7 - 90.0 = 4.7);$$

$$B = USL - UTL \text{ for } USL \geq UTL$$

$$(B = 110.0 - 104.3 = 5.7); \text{ and}$$

$$\delta = \text{minimum } (A, B) = 4.7$$

Figure 2. A graph of the quantities calculated above.

With this choice of δ, and assuming the two procedures have comparable precision, the confidence interval for the difference in means between the two procedures (alternative-current) should fall within −4.7 and +4.7 to claim that no important difference exists between the two procedures.

Quality control analytical laboratories sometimes deal with 99% tolerance limits, in which cases the interval will widen. Using the previous example, the value of *K* required to enclose 99% of the population with 99% confidence for 50 samples is 3.390. The tolerance limits are calculated as follows:

$$99.5 \pm 3.390 \times 2.0$$

The resultant wider tolerance interval is (92.7, 106.3). Similarly, the new LTL of 92.7 and UTL of 106.3 would produce a smaller δ:

$$A = LTL - LSL \text{ for } LTL \geq LSL$$

$$(A = 92.7 - 90.0 = 2.7);$$

$$B = USL - UTL \text{ for } USL \geq UTL$$

$$(B = 110.0 - 106.3 = 3.7); \text{ and}$$

$$\delta = \text{minimum } (A, B) = 2.7$$

Though a manufacturer may choose any δ that serves adequately in the determination of equivalence, the choice of a larger δ, while yielding a smaller *n*, may risk a loss of capacity for discriminating between procedures.

SAMPLE SIZE

Formulas are available that can be used for a specified δ, under the assumption that the population variances are known and equal, to calculate the number of samples required to be tested per procedure, *n*. The level of confidence and power must also be specified. [NOTE—Power refers to the probability of correctly concluding that two identical procedures are equivalent.] For example, if δ = 4.7, and the two population variances are assumed to equal 4.0, then, for a 5% level test[9] and 80% power (with associated *z*-values of 1.645 and 1.282, respectively), the sample size is approximated by the following formula:

$$n \geq \frac{2\sigma^2}{\delta^2}\left(z_\alpha + z_{\beta/2}\right)^2$$

$$n \geq \frac{2(4)}{(4.7)^2}(1.645 + 1.282)^2 = 3.10$$

Thus, assuming each procedure has a population variance, σ^2, of 4.0, the number of samples, *n*, required to conclude with 80% probability that the two procedures are equivalent (90% confidence interval for the difference in the true means falls between −4.7 and +4.7) when in fact they are identical (the true mean difference is zero) is 4. Because the normal distribution was used in the above formula, 4 is actually a lower bound on the needed sample size. If feasible, one might want to use a larger sample size. Values for *z* for common confidence levels are presented in *Table 8*. The formula above makes three assumptions: 1) the variance used in the sample size calculation is based on a sufficiently large amount of prior data to be treated as known; 2) the prior known variance will be used in the analysis of the new experiment, or the sample size for the new experiment is sufficiently large so that the normal distribution is a good approximation to the *t* distribution; and 3) the laboratory is confident that there is no actual difference in the means, the most optimistic case. It is not common for all three of

[9] When testing equivalence, a 5% level test corresponds to a 90% confidence interval.

these assumptions to hold. The formula above should be treated most often as an initial approximation. Deviations from the three assumptions will lead to a larger required sample size. In general, we recommend seeking assistance from someone familiar with the necessary methods.

Table 8. Common Values for a Standard Normal Distribution

	z-Values	
Confidence Level	**One-sided (α)**	**Two-sided (α/2)**
99%	2.326	2.576
95%	1.645	1.960
90%	1.282	1.645
80%	0.842	1.282

When a log transformation is required to achieve normality, the sample size formula needs to be slightly adjusted as shown below. Instead of formulating the problem in terms of the population variance and the largest acceptable difference, δ, between the two procedures, it now is formulated in terms of the population %RSD and the largest acceptable proportional difference between the two procedures.

$$n \geq \frac{2\sigma_L^2}{\delta_L^2}\left(z_\alpha + z_{\beta/2}\right)^2$$

where

$$\sigma_L^2 = \log\left((\%RSD/100)^2 + 1\right)$$

$$\delta_L^2 = \left(\log(\rho + 1)\right)^2$$

and ρ represents the largest acceptable proportional difference between the two procedures ((alternative-current)/current), and the population %RSDs are assumed known and equal.

Appendix 6: Equivalence Testing and TOST

In classical statistical hypothesis testing, there are two hypotheses, the null and the alternative. For example, the null may be that two means are equal and the alternative that they differ. With this classical approach, one rejects the null hypothesis in favor of the alternative if the evidence is sufficient against the null. A common error is to interpret failure to reject the null as evidence that the null is true. Actually, failure to reject the null just means the evidence against the null was not sufficient. For example, the procedure used could have been too variable or the number of determinations too small.

The consequence of this understanding is that, when one seeks to demonstrate similarity, such as results from two laboratories, then one needs similarity as the alternative hypothesis. A statistical test for an alternative hypothesis of similarity is referred to as an equivalence test. It is important to understand that "equivalence" does not mean "equality." Equivalence should be understood as "sufficiently similar" for the purposes of the laboratory(ies). As noted earlier in this chapter, how close is close enough is something to be decided a priori.

As a specific example, suppose we are interested in comparing average results, such as when transferring a procedure from one laboratory to another. (Such an application would also likely include a comparison of precision; see *Appendix 4*.) A priori, we determine that the means need to differ by no more than some positive value, δ, to be considered equivalent or sufficiently similar. (*Appendix 5* provides some guidance on choosing δ.) Our hypotheses are then:

$$\text{Alternative } (H_1): |\mu_1 - \mu_2| \leq \delta$$

$$\text{Null } (H_0): |\mu_1 - \mu_2| > \delta$$

where μ_1 and μ_2 are the two means being compared.

The two one-sided tests (TOST) approach is to convert the above equivalence hypotheses into two one-sided hypotheses. The rationale is that one can conclude $|\mu_1 - \mu_2| \leq \delta$ if one can demonstrate *both*

$$\mu_1 - \mu_2 \leq +\delta \text{ and } \mu_1 - \mu_2 \geq -\delta$$

As one-sided tests, they can be addressed with standard one-sided *t*-tests. In order for the test of the equivalence hypotheses to be of level α, both one-sided tests are conducted at level α (typically, but not necessarily, 0.05). Often, the two one-sided test is performed using a confidence interval. In this case, reject the null in favor of the equivalence hypothesis if the 100(1 − 2α)% two-sided confidence interval is entirely contained in (−δ, +δ). This is the approach described earlier in the *Accuracy* section.

Appendix 7: Additional Sources of Information

There may be a variety of statistical tests that can be used to evaluate any given set of data. This chapter presents several tests for interpreting and managing analytical data, but many other similar tests could also be employed. The chapter simply illustrates the analysis of data using statistically acceptable methods. As mentioned in the *Introduction*, specific tests are presented for illustrative purposes, and USP does not endorse any of these tests as the sole approach for handling analytical data. Additional information and alternative tests can be found in the references listed below or in many statistical textbooks.

Control Charts:

1. *Manual on Presentation of Data and Control Chart Analysis*, 6th ed., American Society for Testing and Materials (ASTM), Philadelphia, 1996.
2. Grant, E.L., Leavenworth, R.S., *Statistical Quality Control*, 7th ed., McGraw-Hill, New York, 1996.
3. Montgomery, D.C., *Introduction to Statistical Quality Control*, 3rd ed., John Wiley and Sons, New York, 1997.
4. Ott, E., Schilling, E., Neubauer, D., *Process Quality Control: Troubleshooting and Interpretation of Data*, 3rd ed., McGraw-Hill, New York, 2000.

Detectable Differences and Sample Size Determination:

1. *CRC Handbook of Tables for Probability and Statistics*, 2nd ed., Beyer W.H., ed., CRC Press, Inc., Boca Raton, FL, 1985.
2. Cohen, J., *Statistical Power Analysis for the Behavioral Sciences*, 2nd ed., Lawrence Erlbaum Associates, Hillsdale, NJ, 1988.
3. Diletti, E., Hauschke, D., Steinijans, V.W., "Sample size determination for bioequivalence assessment by means of confidence intervals," *International Journal of Clinical Pharmacology, Therapy and Toxicology*, 1991; 29,1–8.
4. Fleiss, J.L., *The Design and Analysis of Clinical Experiments*, John Wiley and Sons, New York, 1986, pp. 369–375.
5. Juran, J.A., Godfrey, B., *Juran's Quality Handbook*, 5th ed., McGraw-Hill, 1999, Section 44, Basic Statistical Methods.
6. Lipsey, M.W., *Design Sensitivity Statistical Power for Experimental Research*, Sage Publications, Newbury Park, CA, 1990.
7. Montgomery, D.C., *Design and Analysis of Experiments*, John Wiley and Sons, New York, 1984.
8. Natrella, M.G., *Experimental Statistics Handbook 91*, National Institute of Standards and Technology, Gaithersburg, MD, 1991 (reprinting of original August 1963 text).
9. Kraemer, H.C., Thiemann, S., *How Many Subjects?: Statistical Power Analysis in Research*, Sage Publications, Newbury Park, CA, 1987.
10. van Belle G., Martin, D.C., "Sample size as a function of coefficient of variation and ratio of means," *American Statistician* 1993; 47(3):165–167.
11. Westlake, W.J., response to Kirkwood, T.B.L.: "Bioequivalence testing—a need to rethink," *Biometrics* 1981; 37:589–594.

General Statistics Applied to Pharmaceutical Data:

1. Bolton, S., *Pharmaceutical Statistics: Practical and Clinical Applications*, 3rd ed., Marcel Dekker, New York, 1997.
2. Bolton, S., "Statistics," *Remington: The Science and Practice of Pharmacy*, 20th ed., Gennaro, A.R., ed., Lippincott Williams and Wilkins, Baltimore, 2000, pp. 124–158.
3. Buncher, C.R., Tsay, J., *Statistics in the Pharmaceutical Industry*, Marcel Dekker, New York, 1981.
4. Natrella, M.G., *Experimental Statistics Handbook 91*, National Institute of Standards and Technology (NIST), Gaithersburg, MD, 1991 (reprinting of original August 1963 text).
5. Zar, J., *Biostatistical Analysis*, 2nd ed., Prentice Hall, Englewood Cliffs, NJ, 1984.
6. De Muth, J.E., *Basic Statistics and Pharmaceutical Statistical Applications*, 3rd ed., CRC Press, Boca Raton, FL, 2014.

General Statistics Applied to Analytical Laboratory Data:

1. Gardiner, W.P., *Statistical Analysis Methods for Chemists*, The Royal Society of Chemistry, London, England, 1997.
2. Kateman, G., Buydens, L., *Quality Control in Analytical Chemistry*, 2nd ed., John Wiley and Sons, New York, 1993.
3. Kenkel, J., *A Primer on Quality in the Analytical Laboratory*, Lewis Publishers, Boca Raton, FL, 2000.
4. Mandel, J., *Evaluation and Control of Measurements*, Marcell Dekker, New York, 1991.
5. Melveger, A.J., "Statististics in the pharmaceutical analysis laboratory," *Analytical Chemistry in a GMP Environment*, Miller J.M., Crowther J.B., eds., John Wiley and Sons, New York, 2000.
6. Taylor, J.K., *Statistical Techniques for Data Analysis*, Lewis Publishers, Boca Raton, FL, 1990.
7. Thode, H.C., Jr., *Testing for Normality*, Marcel Dekker, New York, NY, 2002.
8. Taylor, J.K., *Quality Assurance of Chemical Measurements*, Lewis Publishers, Boca Raton, FL, 1987.
9. Wernimont, G.T., *Use of Statistics to Develop and Evaluate Analytical Methods*, Association of Official Analytical Chemists (AOAC), Arlington, VA, 1985.
10. Youden, W.J., Steiner, E.H., *Statistical Manual of the AOAC*, AOAC, Arlington, VA, 1975.

Nonparametric Statistics:

1. Conover, W.J., *Practical Nonparametric Statistics*, 3rd ed., John Wiley and Sons, New York, 1999.
2. Gibbons, J.D., Chakraborti, S., *Nonparametric Statistical Inference*, 3rd ed., Marcel Dekker, New York, 1992.
3. Hollander, M., Wolfe, D., *Nonparametric Statistical Methods*, 2nd ed., John Wiley and Sons, NY, 1999.

Outlier Tests:

1. Barnett, V., Lewis, T., *Outliers in Statistical Data*, 3rd ed., John Wiley and Sons, New York, 1994.
2. Böhrer, A., "One-sided and two-sided critical values for Dixon's Outlier Test for sample sizes up to $n = 30$," *Economic Quality Control*, Vol. 23 (2008), No. 1, pp. 5–13.

3. Davies, L., Gather, U., "The identification of multiple outliers," *Journal of the American Statistical Association* (with comments), 1993; 88:782–801.
4. Dixon, W.J., "Processing data for outliers," *Biometrics*, 1953; 9(1):74–89.
5. Grubbs, F.E., "Procedures for detecting outlying observations in samples," *Technometrics*, 1969; 11:1–21.
6. Hampel, F.R., "The breakdown points of the mean combined with some rejection rules," *Technometrics*, 1985; 27:95–107.
7. Hoaglin, D.C., Mosteller, F., Tukey, J., eds., *Understanding Robust and Exploratory Data Analysis*, John Wiley and Sons, New York, 1983.
8. Iglewicz B., Hoaglin, D.C., *How to Detect and Handle Outliers*, American Society for Quality Control Quality Press, Milwaukee, WI, 1993.
9. Rosner, B., "Percentage points for a generalized ESD many-outlier procedure," *Technometrics*, 1983; 25:165–172.
10. *Standard E-178-94: Standard Practice for Dealing with Outlying Observations*, American Society for Testing and Materials (ASTM), West Conshohoken, PA, September 1994.
11. Rorabacher, D.B., "Statistical treatment for rejections of deviant values: critical values of Dixon's "*Q*" parameter and related subrange ratios at the 95% confidence level," *Analytical Chemistry*, 1991; 63(2):139–146.

Precision and Components of Variability:

1. Hicks, C.R., Turner, K.V., *Fundamental Concepts in the Design of Experiments*, 5th ed., Oxford University Press, 1999 (section on Repeatability and Reproducibility of a Measurement System).
2. Kirk, R.E., *Experimental Design: Procedures for the Behavioral Sciences*, Brooks/Cole, Belmont, CA, 1968, pp. 61–63.
3. Kirkwood, T.B.L., "Geometric means and measures of dispersion," Letter to the Editor, *Biometrics*, 1979; 35(4).
4. Milliken, G.A., Johnson, D.E., *Analysis of Messy Data, Volume 1: Designed Experiments*, Van Nostrand Reinhold Company, New York, NY, 1984, pp. 19–23.
5. Searle, S.R., Casella, G., McCulloch, C.E., *Variance Components*, John Wiley and Sons, New York, 1992.
6. Snedecor, G.W., Cochran, W.G., *Statistical Methods*, 8th ed., Iowa State University Press, Ames, IA, 1989.
7. *Standard E-691-87: Practice for Conducting an Interlaboratory Study to Determine the Precision of a Test Method*, ASTM, West Conshohoken, PA, 1994.
8. Hauck, W.W., Koch, W., Abernethy, D., Williams, R. "Making sense of trueness, precision, accuracy, and uncertainty, "*Pharmacopeial Forum*, 2008; 34(3).

Tolerance Interval Determination:

1. Hahn, G.J., Meeker, W.Q., *Statistical Intervals: A Guide for Practitioners*, John Wiley and Sons, New York, 1991.
2. Odeh, R.E., "Tables of two-sided tolerance factors for a normal distribution," *Communications in Statistics: Simulation and Computation*, 1978; 7:183–201.

Delete the following:

▲⟨1015⟩ AUTOMATED RADIOCHEMICAL SYNTHESIS APPARATUS

The preparation and quality control of diagnostic radiopharmaceuticals labeled with the very short-lived positron-emitting nuclides (e.g., ^{15}O, ^{13}N, ^{11}C and ^{18}F having half-lives of 2, 10, 20, and 110 minutes, respectively), are subject to constraints different from those applicable to therapeutic drugs: (1) Synthesis must be rapid, yet must be arranged to protect the chemist or pharmacist from excessive radiation exposure. (2) Except to a limited extent for ^{18}F, synthesis must occur at the time of use. (3) With the exception of ^{18}F, *each batch of radiopharmaceutical generally leads to only a single administration.*

These factors raise the importance of quality control of the final drug product relative to validation of the synthesis process. Since with few exceptions every dose is individually manufactured, ideally every dose should be subjected to quality control tests for radiochemical purity and other key aspects of quality before administration. Because quality testing of every batch is not possible, batches are selected at regular intervals for examination to establish and completely characterize their radiopharmaceutical purity. This routine and thorough quality testing of selected batches forms the basis of process validation, which is absolutely essential for prospective assessment of batch quality and purity when dealing with such extremely short-lived radiopharmaceuticals. Since radiopharmaceuticals used in positron emission tomography (PET) are administered intravenously or (for radioactive gases) by inhalation, batch-to-batch variability in bioavailability is not an issue. Furthermore, the very small scale of radiopharmaceutical syntheses (almost always less than 1 milligram and often in the microgram range) and the fact that patients generally receive only a single dose of radioactive drug minimize the likelihood of administering harmful amounts of chemical impurities. These statements are not intended to contest the need for quality control in the operation of automated synthesis equipment, but to place the manufacture of positron-emitting radiopharmaceuticals in an appropriate perspective and to reemphasize the overwhelming importance of prospective process validation and finished product quality control.

The routine synthesis of radiopharmaceuticals can result in unnecessarily high radiation doses to personnel. Automated radiochemical synthesis devices have been developed, partly to comply with the concept of reducing personnel radiation exposures to "as low as reasonably achievable" (ALARA). These automated synthesis devices can be more efficient and precise than

General Chapters

existing manual methods. Such automated methods are especially useful where a radiochemical synthesis requires repetitive, uniform manipulations on a daily basis.

The products from these automated radiosynthesis devices must meet the same quality assurance criteria as the products obtained by conventional manual syntheses. In the case of positron-emitting radiopharmaceuticals, these criteria will include many of the same determinations used for conventional nuclear medicine radiopharmaceuticals, for example, tests for sterility and bacterial endotoxins. Many of the same limitations apply. Typical analytical procedures such as spectroscopy are not generally applicable because the small amount of product is below the minimum detection level of the method. In all cases, the applicable Pharmacopeial method is the conclusive arbiter (see *Procedures* under *Tests and Assays* in the *General Notices*).

Preparation of Fludeoxyglucose F 18 Injection and other positron-emitting radiopharmaceuticals can be adapted readily to automated synthesis. In general, the equipment required for the manual methods is simpler and less expensive than that used in automated methods but is more labor-intensive. Of special concern are the methods involved in validating the correct performance of an automated apparatus. For a manual procedure, human intervention and correction by inspection can nullify many procedural errors. In an automated system, effective feedback also can begin during the synthesis. For example, radiation detectors can monitor activity at various stages of radiosynthesis. Failure to obtain the appropriate activity could activate an alarm system that would lead to human intervention.

Radiochemicals versus Radiopharmaceuticals—It is appropriate to draw a distinction between a radiochemical and a corresponding radiopharmaceutical. In research PET centers, automated equipment is used to prepare labeled compounds for animal experiments. These radiochemicals are not regarded as radiopharmaceuticals if (1) they are not prepared according to a validated process that provides a high degree of assurance that the preparation meets all established requirements for quality and purity; and (2) have not been certified by qualified personnel (licensed pharmacists and approved physicians) in accordance with published Pharmacopeial methods for individual radiopharmaceuticals.

Automated Equipment—The considerations in this chapter apply to synthesis conducted by general purpose robots and by special purpose apparatus. Both are automated devices used in the synthesis of radiochemicals. The exact method of synthesis device control is variable. Both hard-wired and software-controlled synthesis devices fall under the general designation, and there is a spectrum ranging from traditional manual equipment through semi-automated devices to completely automatic devices.

Common Elements of Automated Synthesis Equipment—To manipulate a chemical apparatus to effect the synthesis of a radiochemical, control of parameters such as time, temperature, pressure, volume, and sequencing are needed. These parameters can be monitored and constrained to fall within certain bounds.

Equipment Quality Assurance—The goal of quality assurance is to help ensure that the subsequent radiopharmaceutical meets Pharmacopeial standards. Although the medical device good manufacturing practice regulations (21 CFR 820) are not applicable, they may be helpful in developing a quality assurance program. As a practical matter this involves documented measurement and control of all relevant physical parameters controlled by the synthesis apparatus.

Routine Quality Control Testing—Routine quality control testing of automated equipment implies periodic testing of all parameters initially certified during the quality assurance qualification. Depending on the criticality and the stability of the parameter setting, testing may be as often as daily. This process performance assessment must be augmented by regular end product testing. For example, variations in the temperature of an oil bath may be acceptable if the radiochemical (end product) can be shown to meet all relevant testing criteria.

Reagent Audit Trail—Materials and reagents used for the synthesis of radiopharmaceuticals should conform to established quality control specifications and tests. Procedures for the testing, storage, and use of these materials should be established. In this context, a reagent is defined as any chemical used in the procedure leading to the final radiochemical product, whereas materials are defined as ancillary supplies (tubing, glassware, vials, etc.). For example, in some processes compressed nitrogen is used to move liquid reagents. In this case, both the nitrogen and the tubing should meet established specifications.

Documentation of Apparatus Parameters—Key synthesis variables should be identified, monitored, and documented. These characteristics include meaningful physical, chemical, electrical, and performance attributes. A method for specifying, testing, and documenting computer software and hardware is especially important for microprocessor- and computer-controlled devices. This program should include periodic generalized testing of the computer hardware. In addition, the software program code should be periodically examined to determine that it has not been modified and that it continues to result in the final product's meeting all specifications. In-process feedback is one means of confirming that the synthesis is under control. Changes to the software code should involve a formal authorization procedure, and changes should be documented.

Each type of radiochemical synthesis device requires a set of specific procedures for testing and monitoring the reliability and reproducibility of the various subsystems that make up the total synthesis system.

It is essential that calibration of each of the components be confirmed according to an established maintenance timetable and that measurements or monitoring be made under actual synthesis conditions.

Delivery times, reagent volumes, temperatures, gas pressures, and rates of flow need to be measured and shown to be stable and reproducible within established limits. Delivery of the reagents and solvents needs to be calibrated periodically. Other components to be routinely calibrated include the radiation detection system and process monitoring sensors and system.

For illustration, elements of system validation of several representative components of an automatic synthetic device are as follows:

Reaction vessels may be cleaned and inspected by an established documented method. The vessels themselves may be numbered and their performance tracked.

Heating and cooling systems (such as oil baths) may be monitored by thermometers or thermocouples. The temperatures may be recorded in a batch sheet, or they may be automatically printed out as part of a computerized log. Maintenance involves periodic calibration.

Gases and gas delivery system performance may be tracked by pressure gauges and flowmeters. Gas purity may be established via supplier certificates of analysis or may be verified by independent testing. Maintenance of gauges and flowmeters involves periodic calibration with standards.

Position-dependent motor performance may be verified by limit switches. Maintenance could involve actual measurement of distance traversed and elapsed time.

Solenoid valves may be checked electrically, by flow and pressure tests.

Heater output is evidenced by proper thermocouple readings. Additional tests could involve resistance measurements.

Reagents may be accepted on the basis of suppliers' certificates of analysis. Alternatively, the chemical could be tested in-house or sent to an independent testing laboratory. Periodic retesting may be necessary depending on stability.

Computer programs may be tested by documenting elapsed time of synthesis, with printouts verifying that all appropriate manipulations occurred, including printing of relevant parameters such as times, temperature, pressures, and activities.

Patterns of activity distribution such as absolute amount of product, percentage yield, and individual impurity activity levels afford the experienced user an opportunity to discern systems failures.

Changes in the Synthesis Method—Some changes in the synthesis apparatus can be considered to be trivial. This category would often include changes not affecting any of the monitored parameters. However, it is important that care be taken to ensure that seemingly innocuous changes do not have an unexpected impact. For example, changes in a comment line of a computer program may result in inadvertently changing or deleting a vital instruction. Any changes in monitored parameters have the potential for changing the process output. If the resultant radiochemical does not meet specifications or if the subsequent radiopharmaceutical does not meet Pharmacopeial criteria, the process change is unacceptable; the fault must be corrected and the process revalidated. ▲*USP40*

⟨1024⟩ BOVINE SERUM

INTRODUCTION

Bovine serum is the liquid fraction of clotted blood, obtained from an ox (*Bos taurus,* among others), that has been depleted of cells, fibrin, and clotting factors. Since the advent of modern cell culture, manufacturers of biological products have used bovine serum extensively as a cell culture growth supplement. Its rich nutritional composition of proteins, growth factors, hormones, amino acids, vitamins, sugars, lipids, trace elements, and other components supports a broad range of cell culture applications in research and commercial manufacture of vaccines, natural source and recombinant biologics (hereafter biologics), engineered tissues, and other emerging cell-based therapeutic products intended for human or veterinary use. The predominant type of serum used in research applications is Fetal Bovine Serum (FBS). Calf serum (from newborn and older animals) is used much less frequently, but because of its lower cost it may be widely used in commercial manufacturing.

As is the case with other animal-derived products, bovine serum carries a potential risk of introducing extraneous agents into cell culture. Serum manufacturers and regulators must adopt rigorous sourcing and testing procedures and strict processing and production guidelines to ensure the quality of bovine serum.

The objective of increasing the quality and safety of biologics produced with bovine serum, coupled with attempts to mitigate regulatory burden, have caused developers to investigate alternatives to serum supplementation, resulting in application-specific serum-free medium formulations. Although it is recognized that bovine serum should be avoided when there is an option to use serum-free medium, there are cases where this is technically impossible or impractical.

This chapter describes issues related to sourcing, production, and characterization of bovine serum to ensure its safe use. A list of relevant regulatory and guidance documents is presented in *Appendix 1*. Serum manufacturers and serum end users (manufacturers of biological products) should consider and apply as needed the controls and procedures outlined in this chapter to ensure the safe use of bovine serum components in research and pharmaceutical manufacturing.

Types of Bovine Serum

- FBS is obtained from the fetuses of healthy, prepartum bovine dams that had been deemed fit for human consumption through ante- and postmortem inspection by licensed veterinarians. It is collected in government-inspected and -registered slaughterhouses.
- Newborn calf serum (also known as newborn bovine serum) is obtained in government-inspected and -registered slaughterhouses from animals aged less than 20 days.
- Calf serum is obtained in government-inspected and -registered slaughterhouses from animals aged between 20 days and 12 months.

- Donor bovine serum (also known as donor calf serum) is obtained by the repeated bleeding of donor animals from controlled government-inspected and -registered donor herds. The animals are 12–36 months old.
- Adult bovine serum is obtained in government inspected and -registered slaughterhouses from cattle older than 12 months that are declared fit for human consumption.

BOVINE SERUM: HISTORY AND TYPES OF USE

History of Bovine Serum Use

Animal serum and other complex biological materials have been employed in the cultivation of mammalian cells for approximately 100 years. Several factors led to the wide adoption of bovine serum as a standard tissue culture supplement. In comparison to serum from other animal species (horse, goat), bovine serum is easily sourced, and thereby more affordable. Many investigators choose to use fetal serum in their experimental systems because of concerns associated with antibodies present in newborn and adult serum that could cross-react with cells in culture and cause cell lysis through complement-mediated pathways. To eliminate that concern, heat was introduced to inactivate complement that was potentially present in the serum. Studies of FBS undertaken in the 1950s on the cultivation of low-density human cells to elucidate mechanisms of cell growth found that (1) the albumin component may serve as a carrier of essential small molecules; (2) fetuin, a glycoprotein present at high levels in the alpha globulin fraction, facilitates cell attachment and stretching; and (3) fetuin markedly inhibits trypsin, and this antiproteolytic activity may play a role in the ability of fetuin to stimulate cell growth.

In the 1960s and 1970s, serum supplementation of tissue culture media became the norm, thus facilitating biomedical research as well as the first large-scale vaccine manufacturing processes. Serum supplementation reduced the requirement for optimizing medium formulations for different cell types. FBS was shown to provide a variety of polypeptide growth factors. Albumin promoted cell growth presumably because of its abilities to function as a carrier protein for small molecules or lipids, to bind metal ions, to serve as a pH buffer, and to protect cells against shear. Similar functions were found for other serum components such as transferrin, hormones, and other serum-derived attachment factors such as fibronectin, vitronectin, and laminin.

General Chapters

Uses of Bovine Serum

Serum is a complex mixture of macromolecules that is required for cell growth and virus production, and its use as a raw material presents a number of challenges. These include its batch-to-batch composition and the risk of contamination by adventitious agents. The development of serum-free media has replaced serum in some new biotechnology manufacturing applications, but many cell lines used in manufacturing have not been adapted to these serum-free media. Regulatory constraints and scientific challenges generally make it impractical to alter existing manufacturing processes in which serum is used as a raw material.

FBS sometimes is required in cell and tissue bioprocessing, which often involves the cultivation of cells from tissue explants and biopsies. Some bioprocesses may also require the maintenance of specific cellular characteristics during cultivation. FBS often appears to facilitate such procedures and may affect the biological behavior of fastidious cell types. FBS has been shown to affect the transcription of developmentally important genes, apoptosis, and apoptosis-related gene expression, and to provide neuroprotective and antioxidative factors, all of which may be beneficial to the survival and development of cells in culture. Therefore, FBS will continue to play an important role as a cell culture supplement for production of cell- and tissue-based therapies.

In most viral vaccine manufacturing processes the media used for cell culture expansion and virus infection/production are supplemented with different types of serum at different concentrations. In these processes, bovine serum helps generate a mass of cells in an optimal physiological state for efficient viral replication.

BOVINE SERUM HARVESTING AND PRODUCTION

Blood Collection

For all types of bovine sera, blood should be collected in government-inspected and -registered premises (slaughterhouses, abattoirs, and donor farms). Blood should be collected by trained operators following the written procedures approved by the serum manufacturer and using either single-use disposable collection devices or reusable collection equipment for which cleaning procedures have been validated.

DONOR BOVINE SERUM

For each lot of serum from donor animals, serum manufacturers should ensure traceability to the donor herd of origin via production records and animal health and origin certificates. Donor animals are subjected to regular veterinary inspections and are bled multiple times following established procedures. Animals introduced into the herd should be traceable by source,

breeding, and rearing history. Collectors should introduce new animals into the herd following specified and approved procedures that include prepurchase animal inspection and testing, proper transportation, a quarantine period, veterinary examination and testing during the quarantine period, and animal release criteria from quarantine to serum production. The collectors should not vaccinate donor animals for bovine viral diarrhea (BVD). Collectors should test animals for any agent and antibody from which the herd is claimed to be free.

NEWBORN CALF SERUM, CALF SERUM, AND ADULT BOVINE SERUM

Certificates of animal health and origin and/or serum production records should ensure that serum manufacturers can trace bovine serum derived from slaughtered animals back to the abattoir. Serum manufacturers should require abattoirs to maintain documentation of the origin of animals for slaughter. Blood should be collected from animals that have been slaughtered, for human consumption, in abattoirs inspected by the competent authority of the country of origin. Inspectors should routinely inspect animals both antemortem and postmortem to check for the clinical appearance of infections and parasitic diseases and other animal health-related problems or conditions. The animals must be free of clinical evidence of infectious diseases at the time of slaughter. Blood collection procedures must be in place to prevent cross-contamination with other tissues and body fluids and the surrounding environment. The standard procedure of slaughter consists of an approved method of animal stunning followed by exsanguination.

FETAL BOVINE SERUM

FBS product specifications and test procedures are presented in the proposed general chapter *Fetal Bovine Serum—Quality Attributes and Functionality Tests* 〈90〉. Serum manufacturers should collect fetal bovine blood from bovine fetuses whose dams have been slaughtered. The dams must have been deemed fit for human consumption and must have been slaughtered in abattoirs that were inspected by the competent authority of the country of origin. Inspectors should examine all animals both antemortem and postmortem to check for the clinical appearance of infections and parasitic diseases and other animal health-related problems or conditions. The animals must be free of clinical evidence of infectious diseases at the time of slaughter. The uterus is removed and transported to a dedicated space for fetal bovine blood harvest, where blood collection personnel evaluate the fetus for signs of fetal death, including bloating, skin discoloration, odor, deformation, and hair sloughing. Collectors also should check the amniotic fluid for color, quantity, and clarity. Serum manufacturers should collect blood from acceptable fetuses by cardiac puncture into a closed collection system under conditions designed to minimize microbial contamination. Manufacturers should have in place procedures that will prevent cross-contamination with other fetal tissues and bodily fluids and the surrounding environment.

Serum Harvesting and Processing

Trained personnel should perform serum separation (harvesting) and further processing activities following written and approved procedures. Serum is first separated and pooled, followed by filtration and filling into clean and disinfected containers. If the serum is subjected to one or more virus inactivation treatments in the production process, serum manufacturers should validate the virus inactivation processes against a range of relevant viruses. It is recommended that bovine viral diarrhea virus (BVDV) be included in any virus validation study because it is ubiquitous.

SERUM SEPARATION AND HARVESTING

Bovine blood should be processed and serum separated (harvested) in such a way as to minimize bacterial and mycoplasmal contamination, which in turn minimizes endotoxin levels in serum product. Gentle, quick blood processing helps to minimize hemolysis, further enhancing the quality of the serum product. After collection, blood is first allowed to clot for a specified period of time and under controlled conditions, then centrifuged in a refrigerated centrifuge. Serum is then removed from the clot, typically by centrifugation; pooled and mixed in a pooling vessel; transferred to labeled containers; and frozen, unless it is filter-sterilized immediately. Serum manufacturers should describe each process step and carry out serum processing activities, including sample collection and in-process quality control testing, following the manufacturer's approved procedures.

POOLING BEFORE FILTRATION

Because limited amounts of blood can be collected from individual animals, serum manufacturers pool the raw serum from many animals in order to create commercial-sized lots. Serum is pooled, after raw serum thawing and before filtration, in a pooling vessel and mixed at a controlled mixing rate and temperature. Pools or lots of donor bovine serum may consist of many separate collections from individual members of the herd. Lots of FBS may consist of pooled serum from thousands of animals. Serum manufacturers should describe each prefiltration pooling process step and should carry out serum thawing, prefiltration pooling, and mixing activities following the manufacturer's approved procedures.

FILTRATION

Pooled serum is mixed and aseptically passed through filters of pore size 0.2 µm or smaller, depending on the intended application. Filtration processes should be validated. Triple filtration using filters of pore size 0.1 µm has been shown to result in a high degree of mycoplasma removal. Although filtration may remove some large viruses and viral aggregates from the serum, generally viruses cannot be completely eliminated in this manner. Furthermore, the filters are not known to eliminate the causative agent of bovine spongiform encephalopathy (BSE). Following filtration, serum manufacturers fill filtered serum into sterile containers by aseptic processing in a suitably controlled environment. Serum manufacturers should describe each filtration process step and should perform serum filtration, filling, and sample collection activities following the manufacturer's approved procedures.

IRRADIATION

Serum treatment by gamma irradiation is very common and one of the most effective methods of virus inactivation. The most frequently used minimum dose is 25 kilograys (kGy). Some countries specify higher dose requirements (>30 kGy) for imported serum. Gamma irradiation may inactivate viruses, mycoplasma, and bacteria, but serum end users should ensure that the gamma irradiation process does not negatively affect their specific applications. Irradiation may have adverse effects on serum quality, and these adverse effects tend to increase with higher doses.

Validation of gamma irradiation has two aspects: (1) dose delivery in a defined load configuration and (2) inactivation capacity. Critical irradiation process parameters include product (serum) temperature, packaging size and configuration, dosimeter distribution, and defined minimum/maximum dose received. Dosimeters should be used to monitor the established high-dose and low-dose positions in each irradiation run. If the serum manufacturer makes inactivation claims, these should be supported by the manufacturer's own well-designed viral inactivation studies.

General Chapters

ULTRAVIOLET (UV) TREATMENT

Serum manufacturers may use UV treatment to inactivate viruses, mycoplasma, and bacteria, but manufacturers must validate the process to demonstrate its efficacy. In addition, manufacturers must be aware that UV treatment may have an adverse effect on serum quality and accordingly should consider the effects of UV treatment for each application, as should serum end users.

HEAT INACTIVATION

Heat inactivation involves elevating the temperature of the serum to >56° for at least 30 minutes to inactivate complement. Heat inactivation may also inactivate viruses, mycoplasma, and bacteria; but it may have an adverse affect on serum quality, and manufacturers must validate the procedure's suitability for specific applications. Heat inactivation provides significantly less assurance of virus inactivation than does irradiation.

VIRAL CLEARANCE STUDIES

Viral Safety Evaluation of Biotechnology Products Derived from Cell Lines of Human or Animal Origin ⟨1050⟩ and other regulatory documents give guidance about conducting viral clearance studies that help validate removal/inactivation processes. Serum manufacturers should also perform formal spiking studies with relevant and representative (model) viruses, and should test and compare inactivated spiked serum samples, negative controls, and positive controls.

CHARCOAL STRIPPING

Some serum manufacturers use charcoal/dextran treatment to reduce the levels of hormones in serum.

DIALYSIS

Some manufacturers use dialysis or diafiltration to remove low molecular weight components from serum.

CLEANING AND STERILITY OF EQUIPMENT

Stainless steel systems and tubing used in the manufacture of bovine serum must be cleaned and sterilized to prevent cross-contamination and growth of adventitious agents. Serum manufacturers must validate their cleaning processes for removing and inactivating agents of concern. Thereafter, manufacturers should implement process controls that routinely verify cleaning cycles. Steam sterilization-in-place is a common and effective sterilization technique. Serum manufacturers that use this tech-

nology must validate steam cycles to demonstrate their uniformity and ability to destroy heat-resistant bacterial spores. Alternatively, manufacturers can use sterile disposable systems that do not require cleaning validation.

Quality Control

TRACEABILITY

Abattoir Collection: Materials collected in the U.S. should originate from U.S. Department of Agriculture (USDA)-registered facilities. Serum manufacturers should maintain documentation that traces a given serum sub-lot to the abattoir where it was collected. Slaughterhouses maintain records of animal source. General industry practice is to keep this information as part of the Device Master Record. General record-keeping requirements at USDA-licensed abattoir facilities are outlined in 9 Code of Federal Regulations (CFR) 320.

Materials collected from countries approved by the USDA for importation of bovine products into the U.S. should meet the requirements of the competent authority of the country of origin. In addition, serum manufacturers should keep USDA-required safety testing records of imported materials (if applicable) as part of their Device History Record.

Serum manufacturers should consult 9 CFR 309 and 9 CFR 310 about requirements for inspection of animals for various diseases pre- and post-slaughter. These requirements are recommended for materials collected outside the U.S.

Donor Herd Collection: Serum manufacturers should maintain traceability to the donor animal farm where blood was collected from donor animals. In most cases, manufacturers individually identify farm animals and keep records for bleed and processing dates, making it possible to trace blood collection to an individual animal. A licensed veterinarian or a designee under the guidance of a veterinarian should inspect animals regularly and should certify that the animals are free of disease and fit for human consumption, consistent with 9 CFR 309.

PRODUCT STORAGE AND STABILITY

Serum should be stored in the frozen state at –10° or below. Serum is frozen as quickly as possible to preserve product quality and is stored under controlled storage conditions. Serum manufacturers should establish serum product stability in support of a proposed expiration date. Typical expiration dating for bovine serum is 5 years from the date of filtration and filling. Use of any type of bovine serum beyond the stated expiration date depends on the application, and the serum user must establish the product's continued suitability for use.

Labeling

Finished product labels must contain the following information: product description, lot number, storage conditions, name and address of manufacturer, and a statement indicating the intended use. Materials intended for research purposes are exempt from labeling regulations (21 CFR 801). Typically, serum manufacturers supply a lot-specific Certificate of Analysis (COA) that is classified as part of the product's labeling. See COA requirements in the following section.

Certification/Documentation

CERTIFICATE OF ANALYSIS

The COA should provide information about a specific lot of serum, including tests performed and test results (according to the serum manufacturer's specifications for release), as well as critical labeling identifiers such as lot number, catalog number, description of type of bovine serum, country of origin, and either or both dates of manufacture and expiration. This document is distinct from the certificate of health issued by the competent authority of the country of origin.

CERTIFICATE OF ORIGIN AND CERTIFICATION OF ANIMAL STATE OF HEALTH

The Certificate of Origin establishes the country in which the bovine blood was collected and veterinary certification of the health of the animals pre- and postcollection (9 CFR 327.4).

IMPORT/EXPORT DOCUMENTS

Import/export documents contain formal certification of animal disease status of the country of origin and negotiated/agreed certification statements. These vary from country to country. Each country defines import/export requirements in order to control introduction of exotic animal diseases and their economic impact as well as product safety assessments (risk vs. research, diagnostic, and/or therapeutic benefits).

PRODUCTION REPORTS

Production reports typically are batch records that document the raw materials in identifiable and traceable ways, production methods (centrifugation or filtration) used in manufacturing, equipment and facility cleaning, quality control testing, and personnel performing required activities. Raw material with Certificates of Origin or serum production records facilitates traceability to the source of the blood that was used to create the serum. When serum is used as a raw material for further manufacturing, process documentation also helps demonstrate controlled manufacture of the bovine serum.

BSE RISK ASSESSMENT

Despite the low risk potential of transmissible spongiform encephalopathies (TSEs) in bovine serum, various U.S. and international regulatory agencies have developed guidance to help manage and further reduce the potential risks of transmission. In the absence of appropriate test methods of detecting the infectious agent in fluids such as blood, the consensus recommendation from various regulatory agencies is to adopt good risk assessment strategies. This section of the chapter provides some background information on the disease and current methods of detection; it also highlights risk assessment and risk reduction strategies to potentially prevent transmission of the disease through the use of serum in the manufacturing of medicinal products.

Description of the Disease

TSEs are transmissible animal and human diseases that are characterized by degeneration of the brain, associated with severe neurological signs and symptoms. Since the outbreaks of TSE in cattle, termed BSE, which were transmitted to other species, public health officials have been concerned about the risk of TSE infection, including the possibility of TSE transmission by the use of therapeutic products manufactured using bovine serum. In cattle infected with BSE, lower titers have been found in the cerebrospinal fluid, lung, lymph tissue, spleen, kidney, liver, and ileum. Studies have shown that transfusion of blood from sheep infected with either BSE or scrapie but without evident disease can infect naive sheep. Although the risk of cross-contamination is always present, to date no studies have shown that blood can transmit disease from cattle with BSE. Embryos from BSE-affected cattle have not transmitted diseases to mice. Calves born of dams that received embryos from BSE-affected cattle have survived for up to 7 years, and examination of the brains of both the unaffected dams and their offspring revealed no spongiform encephalopathy.

Detection Strategies

No currently available procedures have been validated as being sufficiently sensitive for routine antemortem screening of asymptomatic animals, although analytical methods are under development for detection and quantitation from low-infectivity materials such as blood. The classic diagnostic test for TSEs is postmortem histological examination of brain tissue to confirm characteristic vacuolar degeneration. Other testing options include immunohistochemical tests that can confirm the presence of PrPSc, the abnormal disease-specific conformation of prion-related protein (PrP), in the vacuolated regions of the brain; and immunochemical tests such as Western blots and enzyme-linked immunosorbent assays that can detect PrPSc in tissues with high or moderately high titers. These tests typically take less time to perform than histological examination (6–8 hours vs. weeks, respectively) and can be partially or fully automated. Although most of these are postmortem tests, studies have demonstrated the feasibility of antemortem testing of lymphoid tissue samples from the tonsils or from the third eyelid of infected animals. Immunochemical tests require extensive sample collection and preparation and can be cost prohibitive for routine testing and monitoring the disease state of large herds. Diagnostic strategies must consider the sensitivity of testing in certain tissues as well as the test's ability to detect infectivity in animals before the development of clinical signs of disease. Negative results do not ensure the absence of infectivity. Detection of infectivity is possible if suspect tissue is inoculated into experimental animals intracranially where the causative agent can amplify. This approach for detection of low infectivity can take months to years to yield a positive result.

Risk Assessment and Risk Reduction Strategies

Serum manufacturers should employ risk reduction strategies to eliminate the danger of cross-contamination of fetal blood with other tissues, including appropriate sourcing of animal-derived articles and using practices that have been shown to eliminate or minimize the risk of transmitting TSE, via either foods or health care products. Serum end users should perform a risk assessment of their sourcing strategy that takes into account the amount of bovine serum used in their application and should conduct supplier audits to ensure traceability of sourcing, handling, and appropriate quality control systems.

SOURCE AND AGE OF ANIMALS

Serum manufacturers should monitor the traceability of each lot of serum to ensure the qualification of bovine serum, as described previously in the two sections *Serum Harvesting and Processing* and *Quality Control*. In addition to traceability, careful selection of source materials is the most important criterion for the safety of medicinal products. Certification of the origin must be available from the supplier, and manufacturers should keep this information on file. The U.S. Food and Drug Administration (FDA) recommendations prohibit the use in FDA-regulated products (except gelatin) of any bovine-derived materials that originate from countries that report indigenous cases of BSE. The current proposed rule qualifies FBS as an unlikely source of BSE infectious material, because current evidence suggests that cow-to-calf transmission of BSE is unlikely. The proposed rule also states that prohibited cattle materials do not include materials sourced from fetal calves of cows that were inspected and passed, as long as the materials were obtained by procedures that can prevent contamination with specified risk materials. For veterinary biologics, current regulations enforced by the USDA's Center for Veterinary Biologics (CVB) indicate that ingredients of animal origin should be sourced from countries with no or low BSE risk, as defined by the U.S. National Center for Import and Export and 9 CFR 94.18.

The most satisfactory sources of materials are from countries with the following:

- No reported cases of indigenous BSE
- Compulsory notification of positive tests
- Compulsory clinical and laboratory verification of suspected cases
- Prohibition of the use in ruminant feed of meat and bone meal containing any ruminant protein
- No importation of cattle from countries where a high incidence of BSE has occurred
- No importation of progeny of affected females

BSE infectivity may increase with animal age. Although bovine serum is considered a low-risk material for TSE transmission, some end users consider it prudent to source serum from dams below a set maximum age. If manufacturers cannot determine the date of the dam's birth, they should consider both the implementation date of the feed ban in the country of origin and the incubation period of BSE in order to determine the safety of the source. A ruminant feed ban was imposed in the United Kingdom in July of 1988. These considerations are lot specific, so audits of the raw material supplier should include a review of records.

PRODUCTION PROCESS

End user manufacturing systems should be in place for monitoring the production process and for batch delineation (definition of batch, separation of batches, and cleaning between batches). Of primary importance is control of the potential for cross-contamination with possible infectious material. Because of the documented resistance of TSE agents to most inactivation procedures, controlled sourcing is the most important criterion in achieving acceptable product safety.

Whenever possible, manufacturers should identify steps that theoretically or demonstratively remove or inactivate agents during the manufacture of the material. Manufacturers should continue their investigations into removal and inactivation methods to identify steps/processes that will help ensure the removal or inactivation of TSE agents. Manufacturers should design production processes using available methods that have the greatest likelihood of inactivating or removing TSE agents. For example, prolonged exposure of tissues to high moist heat and high pH inactivates the BSE agent. Such treatments, however, are inappropriate for the extraction of many other types of bovine-derived articles, such as serum, because these treatments lead to the destruction of the material. Conventional chemical and biochemical extraction and isolation procedures may be sufficient to remove the infectious agent. Similar techniques may be effective for other bovine-derived articles. Further research will help to develop an understanding of the most appropriate methodology for validation studies. Issues to consider during validation of a process for removal of TSE agents include the following:

- The nature of the spiked material and its relevance to the natural situation
- Design of the study (including scale-down approaches)
- Method of detecting the agent (in vitro or in vivo assay) after spiking and after the treatment
- Characterization and standardization of reference materials for spiking
- Data treatment and analysis (see *Design and Analysis of Biological Assays* 〈111〉)

Because no studies have successfully validated analytical methods for the detection of small amounts of the TSE agent, TSE clearance validation studies typically employ the intracranial injection of in-process material into rodents for amplification and detection of potential residual infectivity.

TESTING AND CONTROL OF ADVENTITIOUS AGENTS

Introduction

Rigorous testing procedures, strict processing and production guidelines, and appropriate risk assessments help ensure the safety of the different types of bovine serum. This section discusses specific tests that can detect and control adventitious agents.

Adventitious Agents Testing

The adventitious agents testing required for the evaluation of master seeds, master cells, and bulk and final products is described in 9 CFR 113.53 and by directives from the European Agency for the Evaluation of Medicinal Products (EMEA) (EMEA/CVMP/743/00 and EMEA/CPMP/BWP/1793/02). The testing methods outlined in these documents can detect a wide range of bovine microbial agents in serum products. These testing methods meet the requirements for most of the world's regulatory agencies. Serum manufacturers should test a representative sample of each batch of serum to determine the presence of adventitious agents. Testing is performed after filtration but before any further processing that is intended to inactivate or remove viruses.

Filtration with 100-nm (0.1-µm) pore size filters is an accepted method for removing mycoplasmas and gamma irradiation (> 25 kGy while frozen), and chemical treatments (e.g., with betapropiolactone) are accepted methods of inactivating viruses and mycoplasmas; serum manufacturers routinely use these tools in both production and testing facilities. These treatments do not remove antibodies that may interfere with some applications. Additionally, the treatments do not ensure complete viral removal or inactivation, but can significantly reduce the risk of viral activity. The testing series to screen bovine serum for the absence of adventitious agents typically includes the following:

- Bacterial and fungal sterility testing as described in 9 CFR 113.26
- Mycoplasma testing as described in 9 CFR 113.28
- Viral testing as described in 9 CFR 113.53

The procedures described in *Sterility Tests* ⟨71⟩ confirm the absence of bacterial and fungal infection. For viruses, only cultivation using suitable substrate cells can indicate viral infectivity and replication. Those who use serum for research or production should test the serum for the absence of adventitious agents in a manner that is consistent with the product's intended application, bearing in mind that testing indicates only presence or absence of adventitious agents within the limits of the test procedures used.

Mycoplasma Testing

Mycoplasma contamination in tissue culture can arise from many animal origin sources, including serum, but more commonly it results from cross-contamination of infected cultures. Mycoplasmas are particularly insidious contaminants in cell culture because they

- cannot be visualized by light microscopy even at high density (>10^7 colony-forming units/mL);
- cause no observable change in turbidity or pH of the culture fluid;
- cannot routinely be removed by single sterilizing filters, although removal can be obtained through a triple series of 0.1-µm filters;
- are unaffected by traditional antibiotics used in cell culture; and
- exert an extremely wide variety of adverse effects in tissue culture.

Classical mycoplasma detection is described in *Mycoplasma Tests* ⟨63⟩.

In addition to these methods, more recent detection procedures include luminescent and polymerase chain reaction (PCR) assay procedures. *Nucleic Acid-Based Techniques—Amplification* ⟨1127⟩ describes the general principles of PCR assays. The sensitive 20-minute luminescent assay measures a specific enzyme activity of mollicutes that converts adenosine diphosphate to adenosine triphosphate via a luciferase/luciferin reaction. Results are unequivocal and semiquantitative. PCR methods are quick and sensitive and display with good reliability, but occasional false positive results are a source of concern with commercial testing service labs. PCR may detect mycoplasmal DNA fragments that are non-infectious.

Viral Testing

The virus testing procedures for serum products are outlined in 9 CFR 113.52 and 9 CFR 113.53. In addition, there are other documents that may include equivalent or relevant testing such as EMEA/CVMP/743/00-Rev.2 from the Committee for Veterinary Medicinal Products (CVMP) *Revised Guideline on Requirements and Controls Applied to Bovine Serum Used in the Production of Immunological Veterinary Medicinal Products* and EMEA/CPMP/BWP/1793/02 from the Committee for Proprietary Medicinal Products (CPMP) *Note for Guidance on the Use of Bovine Serum in the Manufacture of Human Biological Medicinal Products*. Serum manufacturers should perform virus testing in compliance with this regulation, using at least two different and sensitive detector cell lines, one of which should be of bovine origin. The tests include cultivation of detector cells in cell culture media supplemented with 15% test serum for at least 21 days. Cells are subcultured at least twice during this period, usually 7 and 14 days post inoculation. At the conclusion of the last subculture (after a total of at least 21 days of incubation), cells are examined for general signs of virus amplification. The following end points are used for general virus detection: microscopic cell examination for cytopathogenic agents such as infectious bovine rhinotracheitis virus, cell staining and microscopic examination for inclusion bodies, and hemadsorption test to detect hemadsorbing agents such as PI-3. In addition to this series of testing and at the conclusion of the last subculture (after a total of at least 21 days of incubation), cells are stained with specific fluorescent antibodies against the following specific viral agents:

- BVDV
- Bovine parvovirus

- Bovine adenovirus
- Bluetongue virus
- Bovine respiratory syncytial virus
- Reovirus
- Rabies virus

In addition to the viruses listed above, other viruses can be causative agents of disease and may require testing in various bovine serum applications. The serum end user is responsible for determining whether full 9 CFR testing is sufficient, and if other specific viral agents should be tested for. Examples of specific viruses not covered by the current virus testing guide may include akabane, bovine herpesvirus 1 (BHV-1), Parainfluenza-3 virus (PI-3), bovine leukemia, bovine rotavirus, bovine circovirus, bovine polyomavirus, coronavirus, torovirus, bovine enterovirus, bovine astrovirus, foot-and-mouth disease virus (FMDV), and rinderpest. *Appendix 2* provides a general description of some of these viruses as well as the ones for which testing is required. A serum end user's thorough risk analysis should determine the scope of testing and serum treatment options.

Risk Assessment and Detection Strategies

Serum manufacturers and serum end users should carry out a comprehensive, science-based risk assessment (e.g. Failure Modes and Effects Analysis) in order to better understand the safety profile of the serum product. The following risk assessment elements can be taken into consideration, but other elements can be included as appropriate: country of origin, region of the country, animal disease status of the country/region of origin, animal age, blood collection process, animal stunning method and exsanguination method, serum manufacturing process, type of production quality system, production in-process controls, final product testing, virus inactivation, equipment segregation, equipment cleaning procedure, personnel training, serum use/application, pharmaceutical product type, and intended use.

The species barrier provides a degree of protection against infection by some animal etiologic agents. This barrier is not an alternative to proactively ensuring that pharmaceutical products are manufactured only from raw materials of animal origin that have undetectable levels of adventitious agents. Inoculation of viable organisms into a nonhost species carries a risk that the organisms could cross the species barrier. An appropriate test regimen of serum material should therefore include examination for potential contaminants associated with the species of origin and the species of intent. Serum treatments to inactivate viral agents are a factor in establishing the appropriate test regimen for a particular material. Lowest risk of contamination is associated with biological materials that are terminally sterilized.

Zero risk is neither possible nor reasonable. The serum manufacturers should fully describe specific testing regimens in the product specifications, and these will vary depending on the type and source of the serum. Therefore, the guidelines for screening described in this chapter are examples only, and screening for all viruses listed may not be required for a particular material. Some manufacturers may perform certain tests on the finished product or on in-process materials rather than on individual component(s). Manufacturers must also evaluate the dilution effect in relation to the limit of detection of the test procedure. Interference with growth or neutralization of viral activity by serum may be an indication of a specific antibody or certain nonspecific factors in serum masking the viral agent. It is recommended that serum manufacturers consider this possibility when determining an adequate level of treatment in their viral inactivation studies or in virus testing applications.

Serum manufacturers should confirm that the species of origin is bovine to ensure that no other nonbovine agents may be present. Manufacturers should perform extraneous virus testing in appropriate cell cultures (see *Virology Test Methods* ⟨1237⟩ for appropriate cell line choices dependent on assay and targeted agent). If necessary, seroconversion studies should be conducted in susceptible animal species using a host species immune antibody response as the method of detection. Studies should use this procedure following an inactivation step to detect whether the virus was present before the virus inactivation process.

Serum manufacturing processes should be conducted in a consistent manner, following the established manufacturing procedures, with adequate quality systems built into the production process. Furthermore, equipment segregation (by species of origin), equipment and facility cleaning procedures, and personnel training are important elements in the risk assessment of the process.

Safety Considerations

End users of donor bovine serum may require serum that does not have detectable antibodies against BVDV or other specific agents so that the users can propagate cell cultures used in vaccine production, diagnostic testing, and test kit preparation, especially for the maintenance of master seed and master cell stocks. More than 40 cell types are available for the production of veterinary biologicals, but fewer than 10 media types are available for their propagation. Some researchers have proposed serum-free media as an alternative in propagating certain cells and viruses; but this means adapting culture procedures, which may alter the cells and change production results. If new or different sera are imported into the U.S., serum end users will require confirmation of source, species, and documentation of the origin of the sera in countries that are free of FMD and rinderpest.

General Chapters

CHARACTERIZATION OF BOVINE SERUM

Introduction

In the absence of end product-specific requirements, each lot of FBS should be tested to confirm that the serum meets the requirements of the proposed general chapter *Fetal Bovine Serum—Quality Attributes and Functionality Tests* 〈90〉. For all other types of bovine sera, this section describes several key procedures for characterization. These procedures are not mandatory but are guidelines that manufacturers may consider for their individual applications. The table in the *Hemoglobin* section shows samples of specifications for the different types of bovine sera.

Species Identification

Both inter- and intraspecies identification assays should be performed on bovine sera to confirm species identity and the integrity of the serum products, and to ensure that nonbovine agents are not present. The most commonly used assay for the identification of bovine species identity is based on the electrophoretic profile of specific serum proteins. With electrophoresis, the serum proteins usually separate into as many as six fractions: albumin, alpha 1, alpha 2, beta 1, beta 2, and gamma globulins.

Other procedures used for bovine speciation include radial immunodiffusion (RID) and the double diffusion Ouchterlony method. These procedures allow either qualitative or quantitative measurements of the immunoglobulin G levels in serum. The RID method is based on the diffusion of an antigen from a circular well into a homogeneous gel that contains specific antiserum for each particular antigen. A circle of precipitated antigen and antibody forms and continues to grow until it reaches equilibrium. The diameters of the rings are a function of antigen concentration. The Ouchterlony method is a double gel diffusion test wherein antigen and antibody diffuse toward each other in a semisolid medium to a point in the medium where optimum concentration of each is reached, forming a precipitate. The Ouchterlony plates contain cylindrical wells—a central 8-mm diameter antigen well, surrounded by six 3-mm antisera wells—which make possible the simultaneous monitoring of multiple antigen–antibody systems and the identification of particular antigens in a preparation. The proposed general chapter *Fetal Bovine Serum—Quality Attributes and Functionality Tests* 〈90〉 describes the accepted procedure.

Hemoglobin

Hemoglobin is a multi-subunit protein that forms an unstable reversible bond with oxygen in the red blood cells. The oxygen-loaded form is called oxyhemoglobin and is bright red. The oxygen-unloaded form is called deoxyhemoglobin and is purple-blue. Oxyhemoglobin is the predominant form in red blood cells.

Low hemoglobin content in sera is widely accepted as a good general indication of rapid and careful processing of blood that will be used for serum. Red blood cells are fragile and rupture easily, releasing hemoglobin into the serum. Rough handling of the harvested blood, poor temperature control, or delayed processing elevates hemoglobin content in serum. Acceptable levels of hemoglobin may vary with intended application. The hemoglobin levels are measured using spectrophotometric procedures (see *Ultraviolet-Visible Spectroscopy* 〈857〉) as described in the proposed general chapter *Fetal Bovine Serum—Quality Attributes and Functionality Tests* 〈90〉.

	FBS	Newborn Calf Serum	Calf Serum	Donor Bovine Serum	Adult Bovine Serum
Sterility test	No growth detected	No growth detected	No growth detected	No growth detected	No growth detected
Mycoplasma	Not detected	Not detected	Not detected	Not detected	Not detected
Virus testing	Not detected	Not detected	Not detected	Not detected	Not detected
Hemoglobin (mg/dL)	<30	<30	<30	<30	<30
Total protein (g/dL)	3.0–4.5	3.5–6.0	5.0–8.0	5.0–8.0	6.0–10.0
pH	7.00–8.00	7.00–8.00	7.00–8.00	7.00–8.00	7.00–8.00
Osmolality (mOsmol/Kg)	280–360	240–340	240–340	240–340	240–340

Chemical Profile

The testing of components such as cholesterol, alpha globulin, beta globulin, gamma globulin, albumin, creatinine, bilirubin, glucose, alanine aminotransferase, aspartate aminotransferase, phosphorus, potassium, calcium, and sodium usually is not considered a criterion for bovine serum lot release. Some manufacturers do not perform the tests on a routine basis but only as auxiliary tests. In some instances hospital clinical laboratories may run the tests. The levels of these chemicals in serum are important to end users and may also be used to assess lot-to-lot variability.

Endotoxin Levels

Although high endotoxin levels are not suitable for applications involving injectables, acceptable levels in bovine sera vary depending on the intended application. Some manufacturers may overlook the importance of low endotoxin levels in bovine sera used in cell culture applications. Endotoxin influences more than 30 biological activities. Some of these are macrophage activation, mitogenic stimulation, and induction of interferon and colony-stimulating factor (for some applications, these may be positive activities). Endotoxin can also lead to cytotoxicity by initiating complement activation. The most commonly used methods for endotoxin detection are the semiquantitative gel clot Limulus amebocyte lysate procedure and the quantitative kinetic chromogenic method described in *Bacterial Endotoxins Test* 〈85〉. For both the gel clot and the kinetic chromogenic assays, valid endotoxin assays require appropriate treatment by heat or dilution in order to avoid adverse effects of interfering substances in serum. Researchers should include a positive product control in each assay to confirm that any interference has been overcome by the heat or dilution treatment.

Osmolality

The osmolality test is designed to evaluate the electrolyte concentration in bovine serum. Chemicals that affect serum osmolality include sodium, chloride, bicarbonate, potassium, proteins, and glucose. Serum manufacturers should measure the osmolality of each serum batch to verify compliance with product specifications, using equipment calibrated with standards that are traceable to the National Institute of Standards and Technology. *Osmolality and Osmolarity* 〈785〉 describes how osmolality is determined by freezing-point depression of the bovine serum solution. Scientists use at least two standards to calibrate the instrument. The osmolality of each sample is calculated and related to the serum water content and is expressed as mOsmol/kg H_2O.

General Chapters

Total Protein Level

The total protein level in serum is measured to verify animal age and compliance with product specifications. *Biotechnology-Derived Articles—Total Protein Assay* 〈1057〉 describes two procedures, the Biuret and Bradford methods, for determining protein concentration. The acceptable level of protein in serum should be assessed by the end user based on the intended application.

Cell Growth Properties

Each lot of serum should be tested for its ability to support in vitro growth of specific cell lines. Bovine sera are highly variable, and different lots may yield different results. Because of this variability, end users should characterize and standardize the cell lines that they will use for this type of testing. End users should design cell growth procedures that will help them check the efficacy of bovine serum in promoting cell growth. Serum manufacturers will benefit from monitoring growth promotion over several generations of subcultures to detect any evidence of cytotoxicity or changes in cell morphology. Different serum manufacturers use different cell types, and the growth studies and cell lines used by serum manufacturers also may differ from those applied by serum end users. When serum manufacturers evaluate the growth properties of a specific cell line in response to a specific lot of serum, they should take into account plating efficiency and/or growth promotion or some other functionality tests that qualify the serum lot for its intended use.

Plating efficiency at low cell density is a preferred method for analyzing the proliferative capacity and survival of single cells under optimal growth conditions. This procedure can reveal differences in the growth rate within the population and is capable of distinguishing between changes in growth rate (colony size) and cell survival (colony number). The growth kinetic is another important aspect in the design of cell-based experiments. Determining the growth curve of each cell line helps define optimal culture conditions, because variation in serum and other growth additives may influence growth parameters, which may affect the experimental outcome.

In the absence of specific tests designed for their particular products, serum users can refer to the functionality tests described in the proposed general chapter *Fetal Bovine Serum—Quality Attributes and Functionality Tests* 〈90〉 to determine whether a lot of serum is suitable for their application. This chapter provides guidance about how to perform growth promotion and plating efficiency tests.

In Vitro Cytotoxicity

Serum manufacturers should use an appropriate cell line for testing each lot of serum, and should perform growth studies through several subcultured generations to ensure that the serum has no cytotoxic effect on the cells. The choice of cell line depends on the intended use of serum. The cell growth and cytotoxicity assays should be performed on the final batch of serum after any viral inactivation step or any further processing.

CONCLUSION

Bovine serum is likely to remain an important component in the manufacture of many biologics, particularly those relying on cell culture. As with similar materials, bovine serum displays inherently variable quality. As a result, serum end users must establish suitable tests, procedures, and acceptance criteria for introduction of materials into a particular application process that uses serum. This may mean screening multiple lots of bovine serum to determine which lots meet the specification (see the section *Characterization of Bovine Serum*).

Manufacturers of therapeutic products using bovine serum are responsible for ensuring and documenting its quality and its impact on the quality, safety, and efficacy of the final product. In addition, it is important to ensure that each lot of serum performs in an equivalent manner during manufacturing. Serum can also interfere with final product purification; therefore it is important to understand the effect of bovine serum on the manufacturing process in order to understand the effect that various processes might have on the final product. Finally, risks can also be mitigated through the design of processes to include steps to adequately remove the bovine material through dilution, separation, or inactivation as well as the development of analytical assays to assess the bovine-derived residual content during processes and in the final therapeutic product. A number of sensitive assays can provide a quantitative means of detecting bovine material at picogram levels.

APPENDICES

Appendix 1: Relevant Regulatory References

Bovine sera and serum-related products used in the manufacture of biological products are regulated in the context of *Requirements for Ingredients of Animal Origin Used for the Production of Biologics*, 9 CFR 113.53. Currently, individual serum manufacturers perform detection studies to identify contaminating viruses. Because of the potential international market for serum, serum manufacturers need to be mindful of other regulatory requirements. Manufacturers can use the documents listed here as guidance for screening bovine sera for contamination by adventitious agents. Because of the risk carried by animal-derived serum products, serum manufacturers and end users should ensure that the country of origin of the material complies with applicable regulatory requirements. Although no cell performance assays currently demonstrate lack of BSE in serum, serum manufacturers must comply with the regulatory requirements of countries where the serum is sourced and marketed to ensure a minimal risk of infection with BSE/TSE.

Beyond relevant *USP* chapters referenced in this chapter, the following list of documents includes regulatory documents as well as best practices in product and process development, manufacturing, quality control, and quality assurance.

CFR

- 9 CFR 94.18 (CVB, 2001)
- 9 CFR 113.46
- 9 CFR 113.47
- 9 CFR 113.52
- 9 CFR 113.53
- 9 CFR 113.55
- 9 CFR 320
- 9 CFR 327.4
- 21 CFR 211 Subpart E
- 21 CFR 801.1
- 21 CFR 809.10

FDA

- FDA. Center for Biologics Evaluation and Research (CBER). 2000. Letter to manufacturers of biological products. Available at: http://www.fda.gov/BiologicsBloodVaccines/SafetyAvailability/ucm105877.htm
- Use of materials derived from cattle in medicinal products intended for use in humans and drugs intended for use in ruminants (Proposed Rule). *Federal Register*. 2007; *72*(8): 1582–1619. Available at: http://www.reginfo.gov/public/

International Regulations and Guidance Documents

- CPMP/Biotechnology Working Party/EMEA (CPMP/BWP/EMEA). 1996. *Note for guidance on virus validation studies: the design, contribution and interpretation of studies validating the inactivation and removal of viruses*. Available at http://www.ema.europa.eu/docs/en_GB/document_library/Scientific_guideline/2009/09/WC500003684.pdf.
- CPMP/BWP/EMEA. 2003. *Note for guidance on the use of bovine serum in the manufacture of human biological medicinal products*. Available at http://www.ema.europa.eu/docs/en_GB/document_library/Scientific_guideline/2009/WC500003675.pdf.
- EMEA/CVMP/743/00-Rev.2 from the Committee for Veterinary Medicinal Products (CVMP). *Revised guideline on requirements and controls applied to bovine serum used in the production of immunological veterinary medicinal products*. Available at http://www.ema.europa.eu/docs/en_GB/document_library/Scientific_guideline/2009/10/WC500004575.pdf.
- CPMP/CVMP. *Note for guidance on minimising the risk of transmitting animal spongiform encephalopathy agents via human and veterinary medicinal products*. Available at http://www.ema.europa.eu/docs/en_GB/document_library/Scientific_guideline/2009/09/WC500003712.pdf.

- World Health Organization (WHO), Office International des Epizooties. *Terrestrial animal health code.* Available at http://www.oie.int/doc/ged/D10905.pdf.
- WHO. 2006. *WHO guidelines on tissue infectivity distribution in transmissible spongiform encephalopathies.* http://www.who.int/bloodproducts/cs/TSEPUBLISHEDREPORT.pdf.

Appendix 2: Viruses to Consider when testing Bovine Serum

Following is a general description of viruses that manufacturers can consider when testing bovine serum for the absence of adventitious agents. The list is intended to provide general information. The list of required testing is described in this chapter in the section *Viral Testing*.

Akabane—An insect-transmitted virus that causes congenital abnormalities of the central nervous system in ruminants. Disease due to *Akabane* virus has been recognized in Australia, Israel, Japan, and Korea. Antibodies to it have been found in a number of countries in Southeast Asia, the Middle East, and Africa. The disease affects fetuses of cattle, sheep, and goats. Asymptomatic infection has been demonstrated serologically in horses, buffalo, and deer (but not in humans or pigs) in endemic areas.

Bluetongue—An infectious, noncontagious arthropod-borne viral disease primarily of domestic and wild ruminants. Infection with bluetongue virus is common worldwide but is usually subclinical or mild. *Bluetongue* virus is the type-species of the genus *Orbivirus* in the family Reoviridae. Worldwide, 24 serotypes have been identified, although not all serotypes exist in any one geographic area: e.g., only 5 serotypes (2, 10, 11, 13, and 17) have been reported in the U.S. Distribution throughout the world parallels the spatial and temporal distribution of vector species of *Culicoides* biting midges, which are the only significant natural transmitters of the virus.

Bovine adenovirus—Associated with a wide spectrum of diseases. *Bovine adenovirus* type 3 is the serotype most often associated with bovine respiratory disease. *Bovine adenoviruses* are DNA viruses that have been separated into two genera: the *Mastadenovirus,* or *mammalian adenoviruses,* and the *Aviadenovirus,* or *avian adenoviruses.* Within the genus *Mastadenovirus* are numerous species-specific serotypes, nine of which have been identified in cattle. *Epitheliotrophic adenoviruses* have also been isolated from ruminants, and usually are clinically unapparent. Clinical disease is dictated by various factors, including the strain of virus, concurrent infection, stress, environmental conditions, and management practices.

Bovine herpesvirus 1 (BHV-1)—Associated with several diseases in cattle, including infectious bovine rhinotracheitis, infectious pustular vulvovaginitis, balanoposthitis, conjunctivitis, abortion, encephalomyelitis, and mastitis. BHV-1 infections are widespread in the cattle population. In feedlot cattle the respiratory form is most common.

Bovine leukemia—An exogenous C-type oncovirus in the family Retroviridae. Bovine leukemia is a viral disease of adult cattle characterized by neoplasia of lymphocytes and lymph nodes. Infection occurs by iatrogenic transfer of infected lymphocytes and is followed by a permanent antibody response. The prevalence of infection in a herd may be high, but only a few animals develop fatal lymphosarcoma. Infection is spread by contact with contaminated blood from an infected animal.

Bovine reovirus—Double-stranded ribonucleic acid (RNA) (dsRNA) viruses with nonenveloped spherical virions 60–80 nm in diameter. They cause bovine respiratory diseases.

Bovine respiratory syncytial virus (BRSV)—An RNA virus classified as a pneumovirus in the Paramyxovirus family. This virus was named for its characteristic cytopathic effect—the formation of syncytial cells. In addition to cattle, sheep and goats can also be infected by respiratory syncytial viruses. Human respiratory syncytial virus (HRSV) is an important respiratory pathogen in infants and young children. HRSV has antigenic subtypes, and preliminary evidence suggests the existence of antigenic subtypes of BRSV. BRSV is distributed worldwide, and the virus is indigenous in the cattle population. BRSV infections associated with respiratory disease occur predominantly in young beef and dairy cattle.

Bovine rotavirus—A dsRNA spherical virion 60–80 nm in diameter without an envelope. It is the most common viral cause of diarrhea in calves and lambs.

Bovine viral diarrhea virus (BVDV)—An RNA virus classified as a *Pestivirus* in the family Flaviviridae. BVDV can cross the placenta and appears to be capable of inducing immunosuppression, which allows the development of secondary bacterial pneumonia. BVDV has been reported to be the virus most frequently associated with multiple viral infections of the respiratory tract of calves.

Foot-and-mouth disease (FMD)—A highly infectious viral disease of cattle, pigs, sheep, goats, buffalo, and artiodactyl wildlife species. In a susceptible population, morbidity approaches 100%. The disease is rarely fatal except in young animals. FMD is caused by an *Aphthovirus* of the family Picornaviridae. Seven immunologically distinct serotypes are known, and within each serotype exist a large number of strains that exhibit a spectrum of antigenic characteristics.

Parainfluenza-3 virus (PI-3)—An RNA virus classified in the Paramyxovirus family. Although PI-3 is capable of causing disease, the virus usually is associated with mild to subclinical infection. The most important role of PI-3 is to serve as an initiator that can lead to the development of secondary bacterial pneumonia. Infections caused by PI-3 are common in cattle.

Parvovirus—A relatively heat-stabile single-stranded DNA virus approximately 20 nm in diameter that has been recovered from cattle but under natural conditions is not known to cause disease.

Rabies—An acute viral encephalomyelitis that principally affects carnivores and bats, although it can affect any mammal. Rabies is caused by *Lyssaviruses* in the Rhabdovirus family. Although they are usually confined to one major reservoir species in a given geographic area, spillover to other species is common.

Rinderpest—A *Morbillivirus,* closely related to the viruses that cause canine distemper and measles. Strains may vary markedly in host range and virulence. Sera from recovered or vaccinated cattle cross-react with all strains in neutralization tests, but minor antigenic differences have been demonstrated. The virus is fragile and becomes rapidly inactivated by heat and light but remains viable for long periods in chilled or frozen tissues. Rinderpest is endemic in many countries in Asia and Africa. Historically, the virus has been widely distributed throughout Europe and Africa but to date has not established itself in North America, Central America, the Caribbean Islands, South America, Australia, or New Zealand. Rinderpest is included in the WHO's Office International des Epizooties list of communicable diseases that have the potential for very serious and rapid spread, irrespective of national borders; that are of serious socioeconomic or public health consequence; and that are of major importance in the international trade of livestock and livestock products.

General Chapters

〈1025〉 PANCREATIN

OUTLINE

1. Introduction
2. Pancreas Collection and Pancreatin Production
3. Quality Control
4. Labeling
5. Certification and Documentation
6. Testing and Control of Adventitious Infectious Agents
    6.1 Overview
    6.2 Risk Assessment Strategies
    6.3 Identification of Relevant Virus Panel Test
    6.4 Virus Clearance by Manufacturing Process Steps
    6.5 Viral Testing
7. Characterization of Pancreatin
    7.1 Description and Physico-Chemical Properties
    7.2 Protein and Enzyme Contents
        7.2.1 Pancreatic Proteases
        7.2.2 Pancreatic Lipase and Colipase
        7.2.3 Pancreatic Phospholipase A2
        7.2.4 Pancreatic Amylase
8. Enzyme Activity Measurements
    8.1 Lipase Activity
    8.2 Protease Activity
    8.3 Amylase Activity
9. Appendix 1: Regulatory Bibliography
10. Appendix 2: Literature Bibliography

1. INTRODUCTION

Pancreatin is a pancreatic enzyme preparation containing amylase, protease, and lipase enzymes isolated from the pancreas gland of the hog, *Sus scrofa* L. var. *domesticus* Gray (Fam. Suidae). The pancreas is a secretory organ that plays a crucial role in the digestive process by producing bicarbonate to neutralize the acidic environment in the duodenum, hormones to regulate various catabolic functions, and a variety of digestive enzymes to degrade food in the small intestine. Pancreatin and pancreatin-containing medicinal products are used to aid digestion and absorption of food (carbohydrates, fat, and proteins) in patients with exocrine pancreatic insufficiency (EPI) caused by cystic fibrosis, chronic pancreatitis, and other conditions that might cause a deficiency in the secretion of pancreatic enzymes.

Pancreatic enzyme products (PEPs) of porcine origin have been marketed in the United States for the treatment of EPI before the enactment of the Federal Food, Drug, and Cosmetic Act of 1938. Supplemental pancreatic enzymes are available in prescription and non-prescription forms. Since 2004, the U.S. Food and Drug Administration (FDA) has required that all pancreatic enzyme drug products marketed in the United States obtain FDA approval via a New Drug Application (NDA). Although over-the-counter pancreatic enzyme products are available without a prescription, they are classified as dietary supplements rather than drugs. Pancreatin and pancrelipase share similar functions and indications; however, pancrelipase, which is available only as a prescription drug, contains more of the active lipase enzyme and also more purified pancreatic extract than pancreatin does.

This chapter describes best practices related to the sourcing and manufacturing of pancreatin raw materials used in both pancreatin and pancrelipase drug products; these best practices help to ensure the safety and efficacy of the drug products made from this active pharmaceutical ingredient (API). A list of applicable regulatory guidance documents is provided in *Appendix 1: Regulatory Bibliography.*

2. PANCREAS COLLECTION AND PANCREATIN PRODUCTION

The animal-sourced raw material (pancreas glands) intended for pharmaceutical processing is a by-product of meat production and is collected in slaughterhouses that are approved by the national competent authority and inspected by the relevant veterinary authority. The animals from which pancreatin is derived must fulfill the requirements for the health of animals suitable for human consumption.

An example of a typical manufacturing process is summarized in the description and flow chart (*Figure 1*) below.

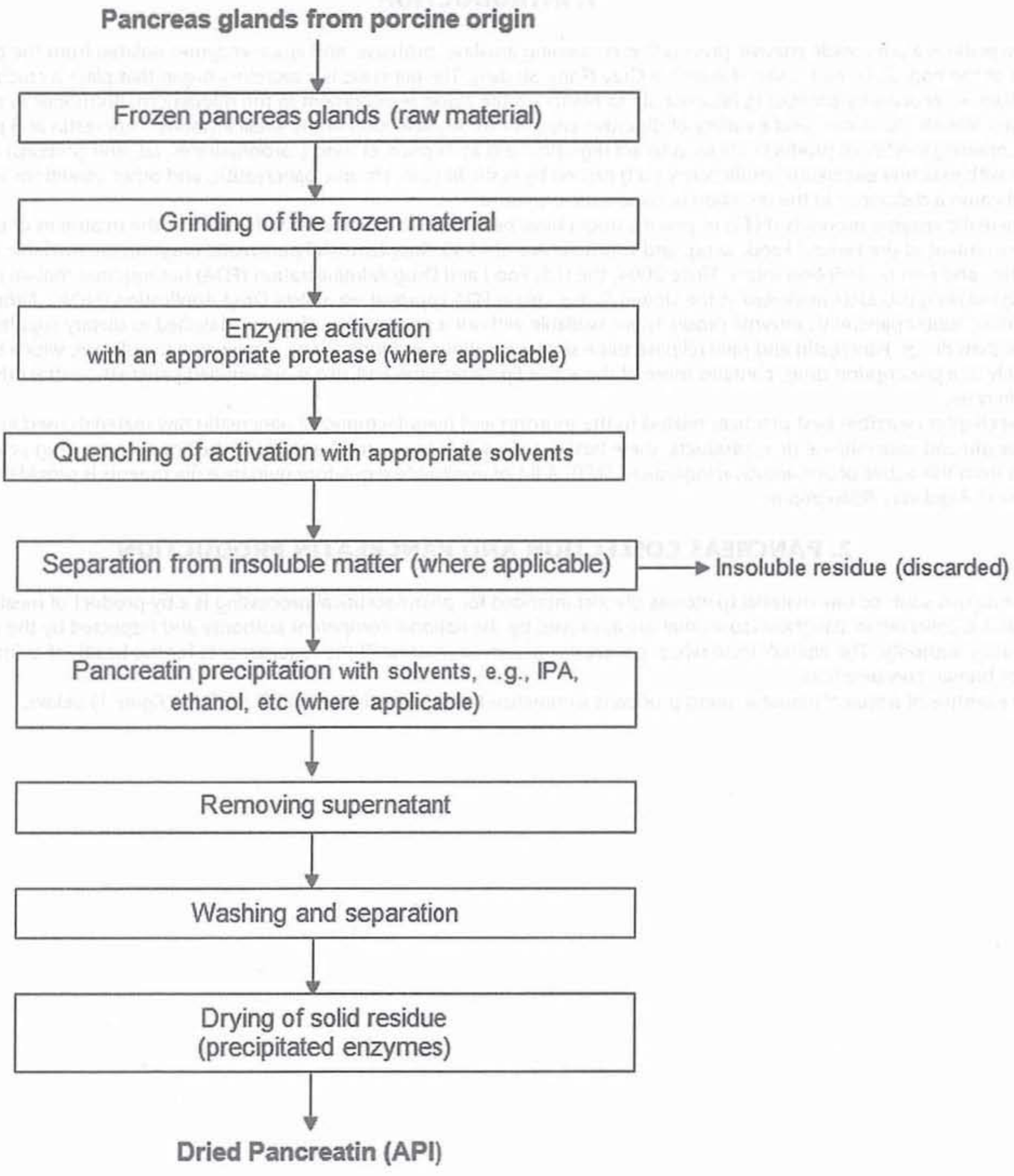

Figure 1. Flow chart showing the steps in the manufacturing process for pancreatin.

The pancreatic glands should be kept frozen to prevent a loss of enzymatic activity during holding and transport. After the manufacturer accepts the frozen materials, the pancreatin is extracted and purified under conditions that reduce microbiological load and other potential impurities. To accomplish this, the frozen pancreatic glands are macerated into fine slurry and treated with activators to convert the inactive pancreatic enzyme precursors (zymogens) into active enzymes. The activation is carried out under controlled conditions; factors such as time, temperature, ionic strength, or concentration are controlled as defined by each manufacturer's process. Once the activation is complete, the activation step is stopped by the addition of solvents such as acetone, isopropyl alcohol, or other enzyme-compatible solvents. After separation from insoluble matter (where applicable), the mixture is combined with solvent to precipitate the pancreatin. The supernatant is separated, and the solid residue is washed with solvent. Finally, the pancreatin is dried at appropriate temperature and vacuum. The biological activity

may be adjusted and/or stabilized by adding suitable fillers, such as lactose; sucrose containing not more than 3.25% starch; pancreatin of lower digestive power; microcrystalline cellulose; maltodextrin; or sodium chloride.

3. QUALITY CONTROL

Each lot of pancreatin is subject to appropriate quality control testing. Quality control testing needs to address the requirements of the applicable monograph, as well as other identified quality parameters. Such tests should include appearance, identification, purity, and activity of the pancreatin. Process- and product-related impurities, such as residual solvents from extraction and precipitation and fat, should be considered.

Water is critical for enzyme activity and stability, and thus the limit of water content should be specified and monitored by appropriate analytical methods such as loss on drying (LOD) (see chapter ⟨731⟩ *Loss on Drying*). The activity assays are applied to confirm that pancreatin meets predefined limits for activity levels of lipase, amylase, and proteases, which are considered critical quality attributes.

Because pancreatin is of biological origin, quality control includes microbial testing as well as testing for the absence of certain adventitious agents that are pathogenic to humans.

4. LABELING

Product should be labeled in conformance to monograph and regulatory requirements but also should conform to customer requirements as applicable. The label contains information such as the name and address of the manufacturer, manufacturing date, retesting date, expiration date, lot number, storage conditions and specific precautions (e.g., "protect from moisture"), and a statement indicating the intended use.

5. CERTIFICATION AND DOCUMENTATION

The product must be accompanied by required certificates and documentation, as applicable. This documentation should include a certificate of analysis (COA) or other certificate documenting conformance to monograph requirements and quality control test results; a certificate of origin indicating the animal species; and certifications related to adventitious agents, including, where applicable, Transmissible Spongiform Encephalopathy/Bovine Spongiform Encephalopathy statements. Other pertinent and required information, such as retest or expiration date, storage, and packaging recommendations, should also be included as applicable.

The manufacturer/supplier should also be able to provide documentation for regulatory purposes containing the following information:

- Information on the regulatory agency's approval/license number and the full address of the pancreatin manufacturing site.
- A statement that the animal-sourced raw materials intended for pharmaceutical processing were collected and delivered under oversight of the responsible/competent authorities.
- A list of the countries of origin of the collected raw materials.
- A statement that during transportation, the pancreas glands can be identified for animal by-products intended for pharmaceutical purposes by appropriate documentation according to the corresponding legal regulations (such as animal health certificates from official veterinarians or a technical trade documentation).
- A statement that the pancreas glands are collected in approved slaughterhouses, and the animals from which pancreas glands are collected have undergone inspection in compliance with the current applicable legislation and were declared as suitable for human consumption, or no visible signs of diseases transmittable to humans or animals were detected at the time of slaughter.

6. TESTING AND CONTROL OF ADVENTITIOUS INFECTIOUS AGENTS

6.1 Overview

Although there have been no reports documenting any infectious illness subsequent to the use of pancreatin-derived medicinal products, there is a theoretical risk of porcine pathogen transmission from pancreatin.

The safety of porcine-derived PEPs should be enhanced by implementation of multiple complementary and/or overlapping strategies for adventitious agent containment, clearance, and control. Manufacturers should take an ongoing, risk-based approach to enhancing the safety of these products with regard to adventitious agents that includes incorporation of risk assessment, risk mitigation, and process materials management strategies. Testing should be included, when appropriate, to provide maximum possible assurance of a sufficiently low risk of harm that is significantly outweighed by the therapeutic benefits and concurrent assurance of availability of the drug to patients.

6.2 Risk Assessment Strategies

The FDA's "Guidance for Industry: Exocrine Pancreatic Insufficiency Drug Products" encourages a risk-based approach to the potential for viral contamination of pancreatic enzyme products, in agreement with ICH Q5A(R1) and chapter ⟨1050⟩ *Viral Safety Evaluation of Biotechnology Products Derived from Cell Lines of Human or Animal Origin*. The adventitious-agent risk profile of biological products in general is contingent upon a variety of factors including the origin of the biological, the type of raw materials used, manufacturing processes, and the route of administration. As sourcing and manufacturing may vary between manufacturers, each manufacturer should establish and implement an individual, full adventitious-agent risk assessment.

Although the scope of ICH Q5A(R1) covers the viral safety evaluation of biotechnology products derived from cell lines of human and animal origin, the principles and risk assessment approaches can provide the basis for a risk evaluation strategy for the pancreatin products. Applying the principles of ICH Q5A(R1), the risk minimization strategy to protect patients against inadvertent adventitious agent exposure should reflect a combination of three components:

1. **Sourcing:** Use of diligent sourcing to limit adventitious agents' access to the manufacturing process. Because pancreatin material is a by-product of the meat industry, it is important to ensure that pancreatin API is produced only from animals suitable for human consumption.
2. **Clearance:** Incorporation of robust clearance steps into the manufacturing process. The efficacy of these strategies depends on the adventitious agents' resistance to the type of physical and chemical inactivation used.
3. **Testing:** The control and testing of adventitious agents at suitable stages of the manufacturing process to provide assurance that any remaining load of potentially harmful adventitious agent is at sufficiently low levels. This is accomplished by using suitable screening assays against a relevant test virus panel. In this part of the risk assessment, the potential of porcine viruses to pose a risk to humans should be taken into account.

To identify the potential adventitious agents that might be present in a pancreatin preparation, manufacturers should identify adventitious agents that are present in the pig and assess the probability of their presence in the starting materials and API. Chapters ⟨61⟩ *Microbiological Examination of Nonsterile Products: Microbial Enumeration Tests* and ⟨62⟩ *Microbiological Examination of Nonsterile Products: Tests for Specified Microorganisms* address testing for specific microbiological contamination, as defined in the relevant pancreatin-related product monographs. Additionally, manufacturers should specifically evaluate the potential presence of porcine viruses. In this evaluation, the manufacturing steps capable of removing or inactivating viruses should be identified, and the efficiency of the process for removing and/or inactivating viruses should be demonstrated by viral validation studies that follow applicable guidelines. Once a list of critical viruses potentially present in the starting material and/or in the API is established, manufacturers will decide on the appropriate process stages for viral testing and the level of viral testing to be performed on a batch-to-batch basis. Tests for specific viruses should be developed and validated, and acceptance criteria should be established and used in making accept/reject decisions about pancreatin API batches.

The potential zoonotic or non-zoonotic character of the virus should be taken into account when setting acceptance criteria.

6.3 Identification of Relevant Virus Panel Test

The risk assessment strategy described above requires the identification of potential viral contaminants of porcine-derived starting materials. *Table 1* gives an overview of enveloped and non-enveloped viruses known to be present in pigs that may present a contamination risk when using pigs deemed fit for human consumption as source animals. The risk assessment should address at least the viruses listed; however, depending on the origin of animals and the manufacturing process capability, the list may be adapted, and additional viruses may be considered (see the example in *Figure 2*). Manufacturers should implement systems to identify emergence of potentially relevant new viruses.

Table 1. Hazard Identification: Viruses Known to be Present in Pigs

Enveloped Viruses	Non-Enveloped Viruses
Classical swine fever virus	Encephalomyocarditis virus (EMCV)
African swine fever virus (ASFV)	Swine vesicular disease virus (SVDV)
Influenza virus	Foot and mouth disease virus (FMDV)
West Nile virus (WNV)	Reoviruses (REO)
Vesicular stomatitis virus (VSV)	Swine hepatitis E virus (swHEV)
Eastern equine encephalitis virus (EEEV)	Porcine rotaviruses (pRotaV)
Rabies virus (RABV)	Porcine enteroviruses (PEVs)
Porcine reproductive and respiratory syndrome virus (PRRSV)	Porcine parvoviruses (PPV)
Transmissible gastroenteritis virus (TGEV)	Porcine circovirus types 1 and 2 (PCV1/2)
Pseudorabies virus (SuHV-1)	
Nipah virus	
Porcine endogenous retroviruses (PERVs)	

6.4 Virus Clearance by Manufacturing Process Steps

Demonstration of viral clearance is a critical component of ensuring the overall safety of pancreatin-derived products. The objective of virus-clearance evaluation studies is not only to evaluate the ability of the manufacturing process to clear known viral contaminants and to estimate quantitatively the overall level of virus reduction obtained by the manufacturing process but also to estimate the capability of the manufacturing process steps to clear viruses in general. Viral clearance studies for the manufacturing process of pancreatin should be performed in accordance with the applicable, current guideline, ICH Q5A(R1).

Current pancreatin production processes are considered to be effective for inactivating enveloped viruses, following the results of virus clearance studies. However, non-enveloped viruses are more resistant to physico-chemical inactivation, making their inactivation more variable. Examples of viruses that are classified as having a high viral resistance toward treatment and that show moderate to limited inactivation include PPV and PCV1/2 (see *Figure 2*).

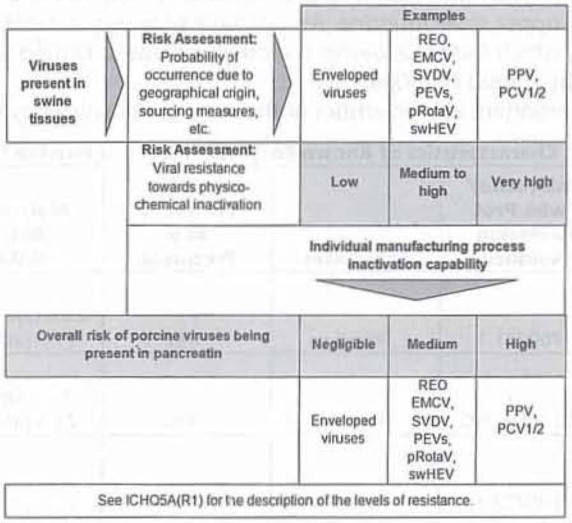

Figure 2. Example of a risk-assessment approach to virus identification for the test panel.

6.5 Viral Testing

A testing strategy is needed when the ability of the process to remove or inactivate a specific virus to appropriate levels has not been demonstrated. The potential zoonotic or non-zoonotic character of the virus should be taken into account when setting acceptance criteria, in terms of both assay sensitivity and specification limit setting. API batches that test positive for zoonotic viruses should be rejected. As a part of quality control, viral testing should be performed on each lot of API. The tests used should allow exclusion of any detectable load of potentially harmful levels of adventitious agent. The 9 CFR describes testing requirements for porcine biological products including live virus vaccines and antibody products but does not specifically address pancreatin. Applying the principles of 9 CFR, assays to detect porcine viruses can, for example, be based on cell culture monitoring for cytopathogenic effects for an appropriate incubation time, hemadsorption testing, virus-specific staining techniques, or appropriate combinations thereof (also see chapter 〈1237〉 *Virology Test Methods*). In addition to the technologies and viruses covered by 9 CFR, new molecular biology-based technologies may be used, and other viruses with zoonotic potential that are identified may require testing. Examples of specific viruses not covered by the current virus testing guide may include swHEV.

The definition of the test virus panel, selection of the appropriate process stage, suitability of the test method, and test method sensitivity should be justified by the manufacturer. All tests for specific viruses should be developed and validated in compliance with current guidance, for example, chapters 〈1225〉 *Validation of Compendial Procedures* and 〈1033〉 *Biological Assay Validation*, as applicable, and acceptance criteria should be established and used for accept/reject decisions of pancreatin API batches.

7. CHARACTERIZATION OF PANCREATIN

7.1 Description and Physico-Chemical Properties

Pancreatin is a slightly brownish to tan amorphous powder with a raw meat odor and taste. Pancreatin is partly soluble in water, forming a weak turbid solution, and insoluble in alcohol and ether. The following conditions may degrade pancreatin: mineral acids, alkali hydroxides, oxidizing agents, many metallic salts, and high humidity and temperatures. Pancreatin-containing solutions should be filtered with caution, due to potential retention of the lipase and proteases on the filter. The enzy-

matic activity reaches a maximum in neutral-to-weakly alkaline solutions. The activity decreases quickly in acidic or strong alkaline solutions. The same applies to boiling of pancreatin-containing aqueous solutions. In non-enteric-coated formulations, exposing the product at a pH of 4.5 or less is not recommended, because a nearly complete loss of lipolytic activity has been observed.

Because pancreatin is of biological origin, other components are present in addition to enzymatically active proteins. These other components include proteins, amino acids, peptides, nucleic acids and fragments thereof, tissue components, fat, and inorganic substances. These components may have an impact on the quality of the final material.

7.2 Protein and Enzyme Contents

Pancreatin contains different digestive enzymes, most of which are produced and stored as zymogens (inactive precursors) in the pancreatic acinar cells. Under physiological conditions, pancreatic zymogens are transformed into active enzymes once the pancreatic secretion reaches the upper small intestine. An intestinal protease, enterokinase, triggers the activation process by cleaving the zymogen of trypsin, which further activates the other proteases. During the production process, the enzymes present in pancreatin are activated by trypsin (see *Figure 1*).

Table 2 summarizes some of the important characteristics of the main pancreatic enzymes found in pancreatin.

Table 2. Characteristics of Known Enzymes Present in Porcine Pancreatin

Name	E.C. Number	UniProtKB/ Swiss-Prot Accession Number	Substrates	Produced as a Precursor	Molecular Mass (kDa)	Sequence Length	Isoelectric Point
Trypsin	3.4.21.4	P00761.1	Proteins	Yes	23.8 (zymogen), 23.5 (activated)	231 a.a. (zymogen), 223 a.a. (activated)	9.3 (zymogen), 10.5 (activated)
Chymotrypsin	3.4.21.1	G1ARD6_PIG	Proteins	Yes	29.1 (zymogen), 25.6 (activated)	268 a.a. (zymogen), 221 a.a. (activated)	8.7
Elastase	3.4.21.36	P00772.1	Proteins	Yes	25.9 (activated)	250 a.a. (zymogen), 240 a.a. (activated)	8.5
Carboxypeptidase A1	3.4.17.1	P09954	Proteins	Yes	34.7 (activated)	308 a.a. (activated)	Not known
Carboxypeptidase B	3.4.17.2	P09955.5	Proteins	Yes	34.7 (activated)	305 a.a. (activated)	6.0
Kallikrein, glandular	3.4.21.35	P00752.4	Proteins	Yes	25–28 kDa	246 a.a. (zymogen), 239 a.a. (activated)	4.2–4.3
Triacylglycerol lipase	3.1.1.3	P00591.2	Triglycerides, diglycerides	No	50.1 (two glycosylation isoforms, lipases A and B)	450 a.a. (mature)	4.9 (lipase A), 5.0 (lipase B)
Colipase		P02703.3	No enzyme activity, cofactor of pancreatic lipase	Yes	10.3 (porcine procolipase A), 10.1 (porcine procolipase B)	93 a.a. (procolipase A), 95 a.a. (procolipase B)	Not known
Phospholipase A2	3.1.1.4	P00592	Phospholipids	Yes	14.7 (zymogen), 14 (activated)	146 a.a. (zymogen), 123 a.a. (activated)	4.4–4.5
Cholesterol esterase, also named carboxyl ester lipase (CEL), carboxyl ester hydrolase (CEH) or bile-salt stimulated lipase (BSSL)	3.1.1.13, 3.1.1.1	Complete amino acid sequence still unknown in pig	Cholesterol esters, vitamin esters, monoglycerides, phospholipids, galactolipids, some activity on triglycerides	No	Inconsistent values in the literature ranging from 65 to 98 kDa. While proteolytic forms have been identified, the exact mass is still unknown.	Complete amino acid composition still unknown in pig	4.2–4.8
α-Amylase	3.2.1.1	P00690.3	Polysaccharides	No	55.3	496 a.a. (mature)	5.95 (amylase I), 5.45 (amylase II)

7.2.1 PANCREATIC PROTEASES

Proteases are enzymes that digest proteins into smaller peptide fragments and amino acids by hydrolyzing the peptide bonds. Pancreatin contains five major proteases: trypsin, elastase, chymotrypsin, carboxypeptidase A1, and carboxypeptidase B. Trypsin, chymotrypsin, and elastase are classified as both serine proteases and endopeptidases because they cleave peptide bonds at the C-terminal side of an amino acid and also have a catalytically important serine residue in their active sites. Carboxypeptidases catalyze hydrolysis of the amino acids from the C-terminal end position in polypeptides and thus are classified as exopeptidases. Carboxypeptidases sequentially release residues from the C-terminus of proteins and peptides with a well-defined specificity.

Trypsin acts specifically on the C-terminal side of the positively charged amino acid residues lysine and arginine. Trypsinogen is secreted by the pancreas as an inactive precursor and discharged into the duodenum where enterokinase converts trypsinogen to active trypsin. Enterokinase is secreted in the duodenum by cells of the duodenal mucosa. Enterokinase removes a terminal octapeptide from trypsinogen and yields a polypeptide chain of active trypsin cross-linked by six disulfide bridges. Trypsin contains one high-affinity calcium binding site that is required for enzyme stability.

Chymotrypsin acts preferentially on the C-terminal side of tyrosine, phenylalanine, and tryptophan residues. It is secreted as an inactive zymogen, chymotrypsinogen, which undergoes proteolytic processing by trypsin to form the active enzyme. Chymotrypsin binds one calcium ion per molecule.

Elastase acts on small, neutral amino acid residues, such as glycine and alanine, but also hydrolyses amides and esters and is distinctive in that it acts upon elastin. Elastase is produced as a zymogen and the activated form contains four disulfide bridges. Elastase binds one calcium ion per molecule.

Carboxypeptidase A1 is an exopeptidase hydrolyzing the peptide bond adjacent to the C-terminal end of a polypeptide chain, thus releasing the C-terminal amino acid. It cleaves aromatic and bulky aliphatic amino acid residues and shows little or no action with aspartic acid, glutamic acid, arginine, lysine, and proline amino acid residues. It contains one zinc ion per molecule. The zinc ion is essential for activity; if removed during dialysis it must be replaced. Thus, carboxypeptidase A1 is also classified as a metalloprotease.

Carboxypeptidase B catalyzes the hydrolysis of the basic amino acids lysine, arginine, and ornithine from the C-terminal end of a polypeptide chain. It may also have a function in the further degradation of products of tryptic digestion. The enzyme binds one zinc ion per molecule, which is a necessary functional part of the enzyme for activity, and thus carboxypeptidase B is also classified as a metalloprotease.

7.2.2 PANCREATIC LIPASE AND COLIPASE

Pancreatic lipase (PL, also known as triacylglycerol acyl hydrolase) is a glycoprotein and produced directly as an active enzyme by the pancreas. Two glycosylation isoforms of PL, lipase A and lipase B, are present in pancreatin. These two isoforms have identical amino acid compositions but differ slightly in their glycosylation patterns, with lipase A as more acidic than lipase B. PL is a water-soluble enzyme that acts on insoluble lipid substrates, triglycerides, at the lipid–water interface. Its activity is dependent on the substrate-specific surface accessible to the enzyme, and it increases with the state of emulsification of the lipids. PL preferentially hydrolyzes ester bonds at the C-1 and C-3 positions of triglycerides and exhibits a broad spectrum of fatty acid chain length specificity. Therefore, PL is active against a wide variety of the triglycerides that are typically present in the diet. It also acts on diglycerides, but its activity on monoglycerides is very weak. It mainly converts triglycerides into monoglycerides and free fatty acids; the more polar lipolysis products are absorbed in the small intestine. In the presence of various amphiphiles such as bile salts at micellar concentrations, the PL adsorption at the lipid–water interface can be hindered, thus decreasing lipolytic activity.

A small protein cofactor also produced by the pancreas, colipase, helps PL to anchor to interfaces in the presence of competitive amphiphiles, and thus restores PL activity. Colipase is also produced by the pancreas as a precursor, procolipase. Procolipase is activated by trypsin.

7.2.3 PANCREATIC PHOSPHOLIPASE A2

Phospholipase A2 (also known as type IB secretory PLA2) is a heat-stable, water-soluble enzyme that catalyzes the calcium-dependent hydrolysis of the 2-acyl groups in 3-sn-phosphoglycerides. It is produced as a precursor that is activated by trypsin.

7.2.4 PANCREATIC AMYLASE

Porcine pancreatic α-amylase (1,4-α-D-glucan glucanohydrolase) catalyzes the hydrolysis of internal 1,4-α-D glucosidic linkages in polysaccharides containing three or more 1,4-α-linked D-glucose units to yield a mixture of dextrins, maltose, and glucose. Amylase exists in two forms (I and II) that have similar enzymatic properties but that differ in their isoelectric points. Both molecular forms of amylase are glycoproteins that contain fucose, galactose, mannose, and different contents of glucosamine. Both amylases consist of a single polypeptide chain with four disulfide bridges and contain a tightly bound calcium ion.

8. ENZYME ACTIVITY MEASUREMENTS

Although pancreatin contains a variety of enzymes, it is usually characterized by measuring the activities of the three main enzyme classes, lipase, protease, and amylase.

8.1 Lipase Activity

The lipase activity of pancreatin on triglycerides with long-chain fatty acids is mainly due to PL, which requires the presence of its specific cofactor, colipase, to act on triglyceride emulsions in the presence of bile salts that are competitors for lipase adsorption at the surface of lipid droplets. Colipase and lipase form an active complex with a 1-to-1 stoichiometry. Commercial preparations of pancreatin usually contain colipase; however, it is recommended to check that the API manufacturing process provides enough colipase for the lipase activity. This control should be part of a proper characterization to be performed during process validation of the API.

Besides PL, pancreatin also contains pancreatic carboxyl ester lipase (CEL), which hydrolyzes several lipid substrates. CEL activity on triglycerides is usually considered very low, compared with that of PL, and its contribution to pancreatin lipase activity is negligible, as measured by the USP lipase assay.

The lipase assay described in the USP *Pancreatin* monograph is based on the enzyme's rate of digestion of olive oil emulsified with acacia (also known as gum arabic). The activity of the test sample is calculated by comparing it to a standard preparation of enzyme with known activity. Olive oil contains triglycerides with long-chain fatty acids that are representative of dietary triglycerides. Lipase activity is measured on the basis of the titration of the free fatty acids released from olive oil upon lipolysis by the lipase present in pancreatin. This titration by sodium hydroxide is performed at a constant pH of 9.0 by pH- or potentiostatic titration, at which long-chain fatty acids are totally ionized. It is worth noting that this pH value does not correspond to physiological conditions (the mean pH of the small intestine contents is close to 6.0 during a meal), but it allows measurement of optimum lipase activity *in vitro*. Because the USP lipase assay solution contains USP Bile Salts Reference Standard (RS), the detection of enzyme activity requires that both lipase and colipase are present in pancreatin. One USP Unit of lipase is defined as the amount of enzyme that, under the defined conditions with the defined substrate, liberates 1 µmole of fatty acid per minute.

Other lipase assays are available for monitoring lipase activity in pancreatin. When using lipase assays with non-natural substrates, such as tributyrin, it is recommended to confirm that the pancreatin sample tested is also active on long-chain triglycerides, particularly using the USP lipase assay with olive oil–acacia emulsion.

8.2 Protease Activity

The proteolytic activity of pancreatin on polypeptides and proteins is due to the inherent enzymes trypsin, chymotrypsin, elastase, carboxypeptidase A1, and carboxypeptidase B. The two major pancreatic proteases are trypsin and chymotrypsin, and along with elastase, these endopeptidases generate small polypeptides from larger proteins. The further action of the exopeptidases carboxypeptidase A1 and B leads to single amino acids during digestion.

The USP spectrophotometric assay for protease activity from pancreatin is based on the enzyme's rate of digestion of casein under test conditions. The activity of the test sample is calculated by comparing it to a standard preparation of enzyme with known activity. Casein is composed of α (s1) and α (s2)-caseins, β-casein, and κ-casein, which are phosphorylated on serine residues and lack disulfide bridges. The conformation of casein is similar to that of denatured globular proteins with little or no tertiary structure. It is recommended that users evaluate suppliers of the casein substrate for consistency of dispersion.

The hydrolysis of casein by pancreatic proteases generates single amino acids and small peptides, and their release can be quantified by measuring their absorption at 280 nm. Before this measurement, non-hydrolyzed proteins and large peptides have to be separated by a selective precipitation with trichloroacetic acid, followed by filtration. The filtrate is then used for the spectrophotometric assay of protease activity, using tyrosine as a calibrant. One USP Unit of protease activity is contained in the amount of pancreatin that hydrolyzes casein at an initial rate such that the amount of peptides liberated per minute and not precipitated by trichloroacetic acid gives the same absorbance at 280 nm as 15 nmol of tyrosine.

Other assays are available for monitoring the activity of individual and total proteases in pancreatin, and the unit assignments are specific for each substrate. *N*-Acetyl-L-tyrosine ethyl ester is commonly used for both titrimetric and spectrophotometric (λ = 237 nm) assays of chymotrypsin activity. Similarly, *N*-benzoyl-L-arginine ethyl ester is commonly used for both titrimetric and spectrophotometric (λ = 253 nm) assays of trypsin activity. In both cases, the titrimetric assay is based on ester hydrolysis by proteases and the release of acid groups, whereas the spectrophotometric assay is based on the chromogenic properties of these acids. Toluene-sulfonyl-L-arginine methyl ester is another chromogenic substrate (λ = 247 nm) used for measuring trypsin activity. These substrates are, however, not proteins, and the assays involve the cleavage of a carboxylic ester bond instead of a peptide bond.

Other assays using chromogenic peptides as substrates have been developed for improving specificity and sensitivity. More specific and sensitive protease assays have been developed using short synthetic peptide substrates (3–5 amino acid residues) with a chromogenic group (4-nitroaniline) coupled to the C-terminal end by an amide bond. The chromogenic group is specifically removed by proteases and is measured photometrically. The change in the absorbance at 405 nm is directly proportional to the protease activity. Specific substrates are commercially available for trypsin (carbobenzoxy-valyl-glycyl-arginine-4-

nitril-anilide acetate) and chymotrypsin (methyl-*O*-succinoyl-arginyl-prolyl-tyrosine-4-nitril-anilide chlorhydrate). Fluorescein isothiocyanate (FITC)-labeled casein is also used as a general protease substrate. The assay is based on the quenching of the fluorescein label bound to casein. When FITC-casein is digested into smaller peptides by proteases, fluorescence at 530 nm (excitation at 485 nm) is increased and can be measured to determine protease activity.

8.3 Amylase Activity

The glycolytic activity of pancreatin is due to α-type amylases. Such enzymes catalyze the hydrolysis on internal α-1,4-glucan links in polysaccharides containing three or more α-1,4-linked D-glucose units, yielding a mixture of maltose and glucose. The two major isoforms (I and II) of porcine amylases have identical enzymatic properties. In the last decades, several methods have been developed for assaying amylase activity; many of these are based on the detection of starch hydrolysis, as this polymer is the natural amylase substrate. Starch consists of two types of molecules, amylose (usually 20%–30%) and amylopectin (usually 70%–80%). Both polymers result from the assembly of glucose units connected via α-1,4-glucan links; in addition, in amylopectin, about 1 residue in every 20 or so, is also linked α-(1→6), forming branch-points.

The USP Amylase assay in the *Pancreatin* monograph is based on the enzyme's rate of digestion of starch, and the activity of the test sample is calculated by comparing it to a standard preparation of enzyme with known activity. Starch is hydrolyzed by amylase; the reducing groups resulting from the hydrolysis react with iodine in alkaline solution; and the excess iodine is titrated with thiosulphate. One USP Unit of amylase activity is defined as the amount of pancreatin that decomposes starch at an initial rate such that 0.16 µEq of glycosidic linkage is hydrolyzed per minute under the conditions of the assay.

APPENDIX 1: REGULATORY BIBLIOGRAPHY

Code of Federal Regulations, title 9 part 113 section 46. Detection of cytopathogenic and/or hemadsorbing agents. US Government Printing Office; 2006. p. 640. Available from: http://www.gpo.gov/fdsys/pkg/CFR-2006-title9-vol1/pdf/CFR-2006-title9-vol1-chapI-subchapE.pdf

Code of Federal Regulations, title 9 part 113 section 47. Detection of extraneous viruses by the fluorescent antibody technique. US Government Printing Office; 2006. p. 640–641. Available from: http://www.gpo.gov/fdsys/pkg/CFR-2006-title9-vol1/pdf/CFR-2006-title9-vol1-chapI-subchapE.pdf

Code of Federal Regulations, title 9 part 113 section 53. Requirements for ingredients of animal origin used for production of biologics. US Government Printing Office; 2006. p. 644–645. Available from: http://www.gpo.gov/fdsys/pkg/CFR-2006-title9-vol1/pdf/CFR-2006-title9-vol1-chapI-subchapE.pdf

EMEA. CHMP/BWP/398498/2005. Guideline on virus safety evaluation of biotechnological investigational medicinal products. 24 Jul 2008. p. 1–9. Available from: http://www.ema.europa.eu/docs/en_GB/document_library/Scientific_guideline/2009/09/WC500003795.pdf

EMEA. CHMP/EWP/9147/2008-corr*. Guideline on the clinical development of medicinal products for the treatment of cystic fibrosis. 22 Oct 2009. p. 1–27. Available from: http://www.ema.europa.eu/docs/en_GB/document_library/Scientific_guideline/2009/12/WC500017055.pdf

FDA. Guidance for industry. Exocrine pancreatic insufficiency drug products—submitting NDAs, April 2006. Available from: http://www.fda.gov/downloads/Drugs/GuidanceComplianceRegulatoryInformation/Guidances/ucm071651.pdf

FDA. Guidance for industry. ICH Q7A: good manufacturing practice guidance for active pharmaceutical ingredients. Aug 2001. p. 1–52. Available from: http://www.fda.gov/downloads/Drugs/.../Guidances/ucm073497.pdf

FDA. Guidance for industry. ICHQ10 pharmaceutical quality system. Apr 2009. p. 1–19. Available from: http://www.fda.gov/downloads/Drugs/Guidances/ucm073517.pdf

ICH. ICH harmonised tripartite guideline. Viral safety evaluation of biotechnology products derived from cell lines of human or animal origin Q5A (R1). 23 Sep 1999. p. 1–27. Available from: http://www.ich.org/fileadmin/Public_Web_Site/ICH_Products/Guidelines/Quality/Q5A_R1/Step4/Q5A_R1__Guideline.pdf

Uniprot Consortium. Available from: www.uniprot.org

APPENDIX 2: LITERATURE BIBLIOGRAPHY

Auld DS. Carboxypeptidase A. In: Barrett AJ, Rawlings ND, Woessner JF, et al., editors. Handbook of proteolytic enzymes. 2nd ed. Amsterdam: Elsevier; 2004. p. 812–821.

Auld DS. Carboxypeptidase A2. In: Barrett AJ, Rawlings ND, Woessner JF, et al., editors. Handbook of proteolytic enzymes. 2nd ed. Amsterdam: Elsevier; 2004. p. 821–851.

Avilés FX, Vendrell J. Carboxypeptidase B. In: Barrett AJ, Rawlings ND, Woessner JF, et al., editors. Handbook of proteolytic enzymes. 2nd ed. Amsterdam: Elsevier; 2004. p. 831–833.

Bieth JG. Pancreatic elastase. In: Barrett AJ, Rawlings ND, Woessner JF, et al., editors. Handbook of proteolytic enzymes. 2nd ed. Amsterdam: Elsevier; 2004. p. 1504–1508.

Bieth JG. Pancreatic elastase II. In: Barrett AJ, Rawlings ND, Woessner JF, et al., editors. Handbook of proteolytic enzymes. 2nd ed. Amsterdam: Elsevier; 2004. p. 1508–1509.

Bieth JG. Pancreatic endopeptidase E. In: Barrett AJ, Rawlings ND, Woessner JF, et al., editors. Handbook of proteolytic enzymes. 2nd ed. Amsterdam: Elsevier; 2004. p. 1510–1511.

Borgström B. On the interactions between pancreatic lipase and colipase and the substrate, and the importance of bile salts. *J Lipid Res.* 1975;16(6):411–417.

Gráf L, et al. Chymotrypsin. In: Barrett AJ, Rawlings ND, Woessner JF, editors. Handbook of proteolytic enzymes. 2nd ed. Amsterdam: Elsevier; 2004. p. 1495–1501.

Lowe ME. The triglyceride lipases of the pancreas. *J Lipid Res.* 2002;43(2):2007–2016.

Desnuelle P, Sjöström H, Noren O, editors. In: Molecular and cellular basis of digestion. Amsterdam: Elsevier; 1986. p. 539.

Peschke GJ. Active components and galenic aspects of enzyme preparations. In: Lankisch PG, editor. Pancreatic enzymes in health and disease. 1st ed. Berlin: Springer-Verlag:1991. p. 55–64.

Verger R. Pancreatic lipase. In: Lipases. Borgström B, Borockman HL, editors. Amsterdam: Elsevier; 1984. p. 84–150. [review]

Verger R, de Haas GH, Sarda L, Desnuelle P. Purification from porcine pancreas of two molecular species with lipase activity. *Biochim Biophys Acta.* 1969;188(2):272–282.

⟨1027⟩ FLOW CYTOMETRY

INTRODUCTION

Flow cytometry is an analytical method that plays a critical role in the quantitative and qualitative assessment of cell populations in patient and cellular product samples. The power of flow cytometry lies in its ability to rapidly and reliably analyze multiple attributes of individual cells within heterogeneous cell populations. Despite the value of flow cytometry data, method validation is challenging—perhaps more so than for other analytical methods—because of errors and artifacts from multiple sources.

Although flow cytometric methods can also be used to sort and isolate cells as part of the manufacturing process for cell- and tissue-based biological products, the scope of this chapter is limited to the use of flow cytometry as an analytical method. This chapter presents the technical aspects of the method, including instrumentation, sample handling and staining, and data analysis. Sources of error are considered in the context of technical features, as well as in the discussion of quality control, quality assurance, and standardization. Finally, current applications and assay troubleshooting principles are presented. For additional information on the basics and practical aspects of flow cytometry, see the current edition of *Practical Flow Cytometry* (Shapiro, 2003).

Flow cytometry is widely used to characterize cell and tissue-based products, but most assay methods are not yet standardized. In addition to issues related to technical complexity, there are also challenges to standardization of flow cytometric methods for specific product classes or types related to the heterogeneous nature of these products, even among those with similar manufacturing processes and clinical uses. Current and future innovations in instrumentation, analytic reagents, analytic algorithms, and automation are likely to improve the technology's capabilities but are unlikely to eliminate challenges (e.g., bioassay, identification tests, and other applications).

PRINCIPLES OF OPERATION, METHODS, QUALITY, AND STANDARDIZATION

The process of flow cytometry requires that cells move past a fixed light source consisting of one or more lasers so that individual cells can be observed or interrogated for characteristics such as size, granularity, and presence of surface membrane or intracellular antigens or molecules. The cells are suspended in fluid in which movement is controlled by the size and configuration of tubing, chambers, and pumps specific to the flow cytometry instrument. The pattern of light signals produced from the laser light's interaction with the cells is captured by a detection system, also specific to the instrument, and the detected signals are transformed into data elements that can be analyzed and combined with data from other cells in a given sample. Data from a cell suspension can then be expressed and presented in one-, two-, or three-dimensional visual formats, or in numerical formats, to characterize the cellular sample and its subpopulations both qualitatively and quantitatively.

Flow Cytometry Instrumentation

Flow cytometers, which incorporate fluidic, optical, and electronic signal processing elements, are described below.

FLUIDICS

The fluidics system moves a bulk mixture of cells so that a stream of single cells is formed. Within the flow cytometer, the single-cell suspension passes through a confined region where each cell is sequentially illuminated by a uniform light source at the observation point (interrogation point). Most instruments use a flow chamber (flow cell) that, after the cell sample is drawn into the sample injection tip, combines the cells with isotonic sheath fluid, using a conical nozzle assembly that is geometrically designed to produce a laminar flow of fluid (*Figure 1*). The fluid outlet nozzle typically has an orifice of 50–250 µm in diameter through which fluid exits at a high flow rate. Differential pressures between the sample stream of cells (lower pressure) and the sheath stream (higher pressure) draw the cells/particles out into a confined stream. The resulting coaxial stream within a stream is highly efficient, and the sample stream at the observation point is typically only slightly larger than the cells or particles contained within. At least one manufacturer uses an alternative approach in which the coaxial stream strategy is replaced by the use of microcapillaries to focus and direct the cells. The light signal deflected or emitted by the cell is then measured and analyzed.

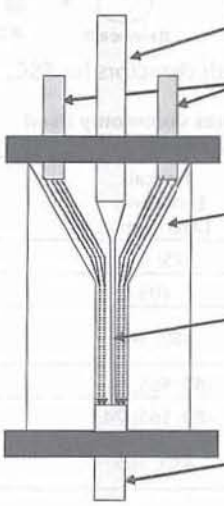

Figure 1. Schematic diagram of a flow cell.

OPTICS

When cells are stained with fluorescent dyes or with fluorescent-labeled antibody reagents, light emitted from the laser interacts with the fluorescent dye to produce a stimulated emission that has coherent (parallel) waves of light of uniform wavelength, phase, and polarization. Fluorescent light signals generated from the interaction of the laser light with the cells are collected by an array of detectors oriented in direct line with, and at 90° to, the incoming laser beam. The most common commercially available flow cytometer lasers (with corresponding wavelengths) are the blue argon laser (488 nm), the red diode laser (635 nm), and the violet laser (405 nm).

ELECTRONIC SIGNAL PROCESSING AND DATA OUTPUT

When a cell passes through the optical system of a flow cytometer, the light-scattering patterns or fluorescence from any fluorochrome on or in the cell are detected by various types of photodetectors or photomultiplier tubes (PMT) that transform the information about the characteristics of the cell into a computerized readout. Each analyzed cell generates an event in each parameter (forward scatter, side scatter, fluorescence) for which it is measured. *Figure 2* shows an example of a typical two-color flow cytometer configuration. Different cell types have distinctive sets of signals in the various parameters. For example, when the cell passes through a beam of light, the light deflected in the forward direction (usually about 20° from the forward direction of the laser) is called forward scatter and is collected by a detector known as the forward scatter channel (FSC). The amount of deflection in the FSC is proportional to cell size. Light deflected at a 90° angle is known as side scatter and is collected by the side scatter channel (SSC). This provides a measure of the cell's structural complexity caused by granules, membrane roughness, or nucleus, all of which are associated with higher SSC. The light deflected by other PMTs using a specific band-pass filter is collected by specific fluorescence channels (FL1 and FL2 in *Figure 2*). The electrical pulses, originating from light detected by the PMTs, are processed by a series of linear and log amplifiers. Logarithmic amplification is often used to measure fluorescence in cells. *Figures 3–7* show histograms for cells stained with antibodies conjugated with specific fluorochromes (see *Table 1*). The antibodies are specific to some of the cluster of differentiation (CD) markers discussed in *Immunophenotyping* (see below).

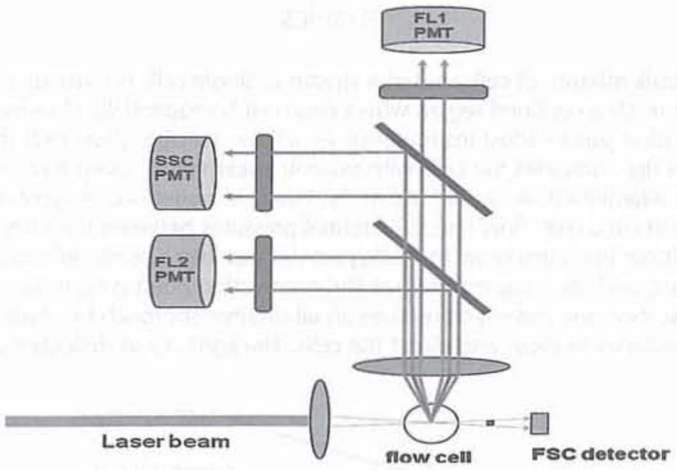

Figure 2. Typical 2-color flow cytometer with detectors for FSC, SCC, and fluorescence.

Table 1. Fluorochromes Commonly Used in Flow Cytometry

Fluorochrome	Typical Excitation Laser (nm)	Emission Peak (nm)
Cascade Blue	375; 401	423
Pacific Blue	403	455
R-Phycoerythrin (R-PE)	480; 565	578
PE-Cy5 conjugates	480; 565; 650	670
PE-Cy7 conjugates	480; 565; 743	767
Red 613 (Texas Red)	480; 565	613
Peridinin Chlorophyll (PerCP)	490	675
Fluorescein (FITC)	495	519
Allophycocyanin (APC)	650	660
APC-Cy7 conjugates	650; 755	767

The versatility of flow cytometry comes from the ability to attach fluorescent tags to the cell's surface, cytoplasm, or nucleus or to products of the cell. Fluorescent markers attached to the cell can be excited by lasers to emit light of specific wavelengths, and this light is then detected and analyzed in the manner described above. The type and amount of fluorescence detected provide both quantitative and qualitative information about the cell.

The photodetectors convert light into an analyzable output by generating a small current of which the voltage has amplitude proportional to the amount of light. The voltage is amplified and converted into electrical signals large enough to be plotted by the computer in several different ways. Thus, the FSC, SSC, and fluorescent detectors collect the light and convert it into electrical signals that can be analyzed by the computer. In this way, the signals coming from each photodetector can be measured for their intensity (low to high) and sorted into channels. The channels are arranged as a continuum so that a cell population with many large cells will have many events in the higher channels, and one with many small cells will have many events in the lower channels.

DATA ANALYSIS

Data output from the flow cytometer can be represented in several ways, the most basic of which is the single-parameter histogram (*Figure 3*), in which events with similar intensity of light (forward scatter, side scatter, or fluorescence) are collected in channels and then plotted. This plot demonstrates the number of cells with similar optical characteristics. *Figure 4* is an example of graphs that display two measurement parameters, one on the *x*-axis and one on the *y*-axis, and the cell count as a density (dot) plot or contour map. The parameters could be SSC, FSC, or fluorescence. These parameters can be collected in one channel.

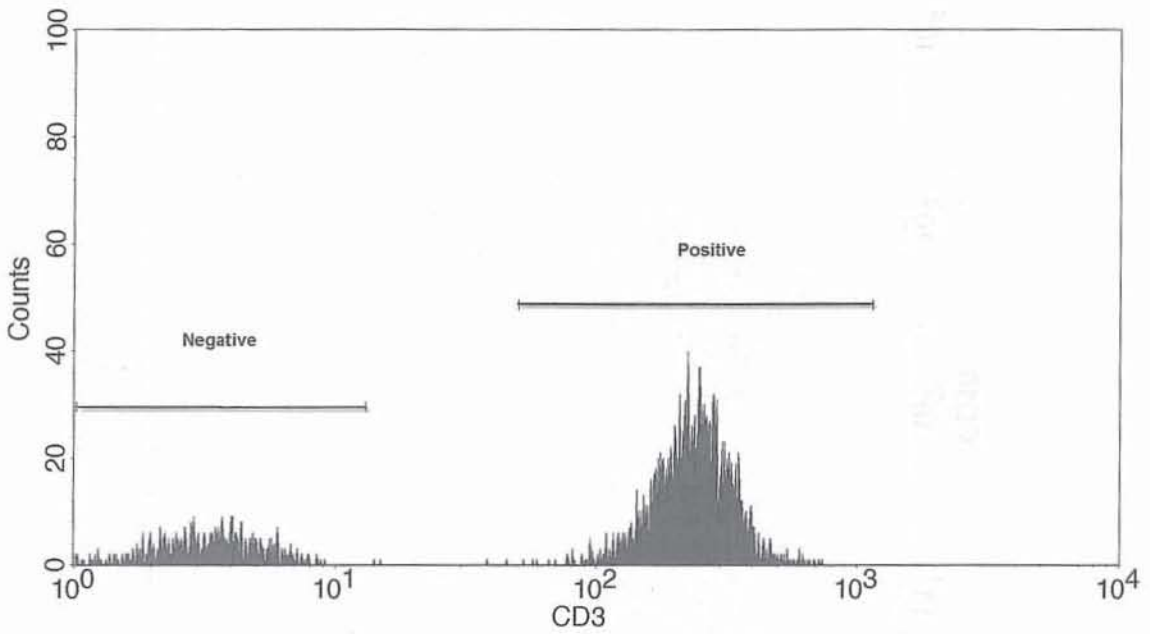

Figure 3. Single-parameter histogram showing expression of the cellular antigen CD3 in a mixture of cells.

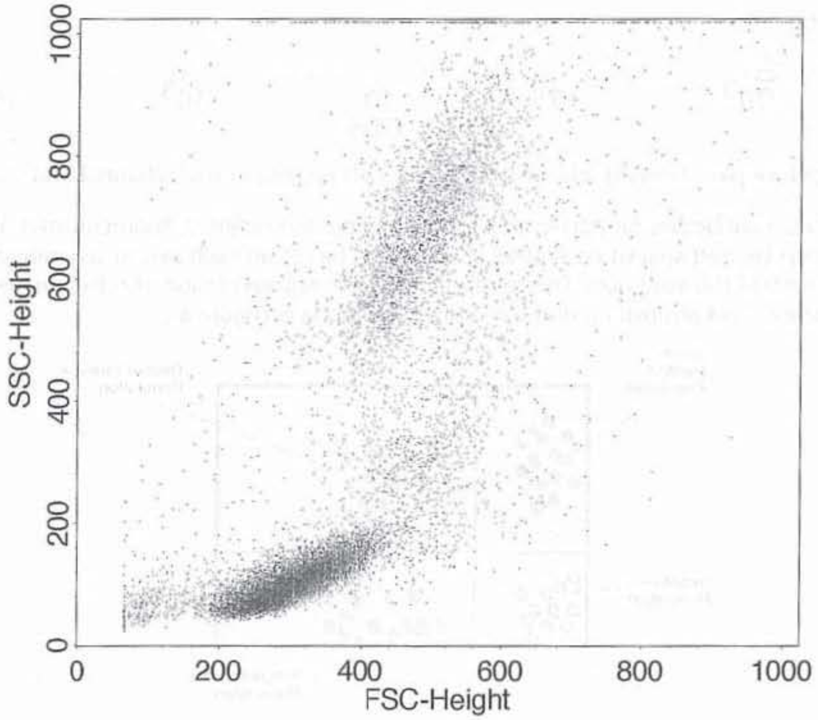

Figure 4. Bivariate dot plot of cells displayed by FSC and SSC.

A dot plot displays a dot for each cell, and density plots and contour plots show a heat map or a topographical linear map, respectively, based on the relative number of cells in each channel. The forward versus side scatter histogram is the most common method of identifying different hematopoietic cell types. *Figure 5* shows a contour plot that is a 3-dimensional representation of the relative number of cells in the various channels.

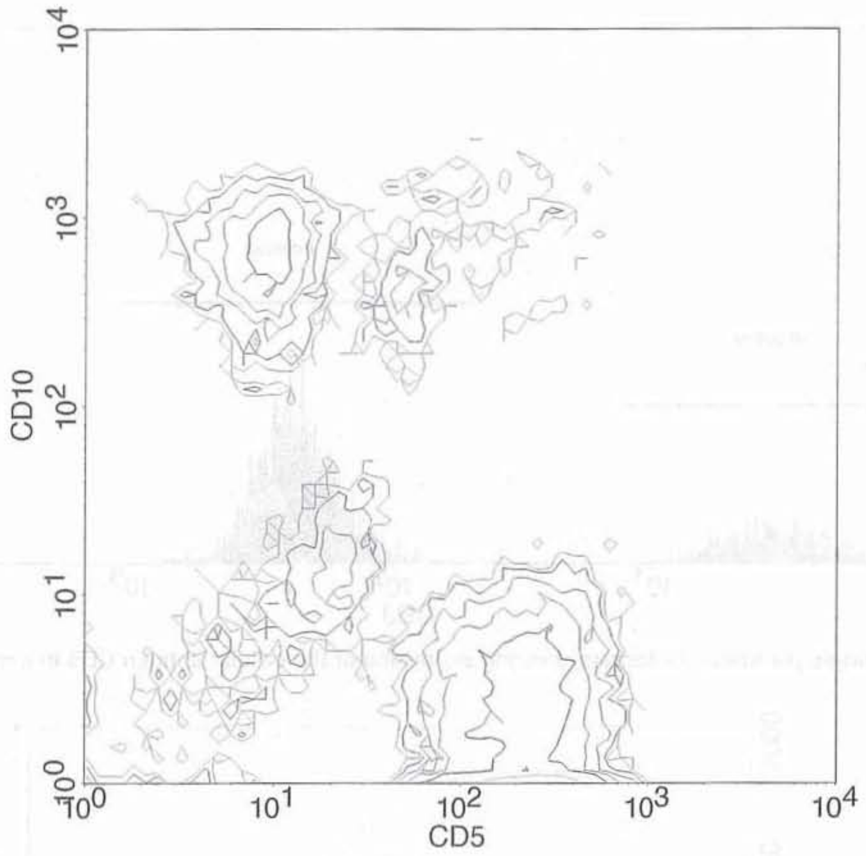

Figure 5. Bivariate contour plot showing relative numbers of cells present in each channel that co-express 2 CD markers.

When cells are stained with antibodies for different epitopes carrying two different fluorochromes, the data are presented as a plot of the two parameters plotted against each other. Cursors can be set on each axis to separate positive populations from negative populations for each of the attributes. This results in a graphic representation of cells that are positive for both markers, negative for both markers, and positive for only one of the two markers (*Figure 6*).

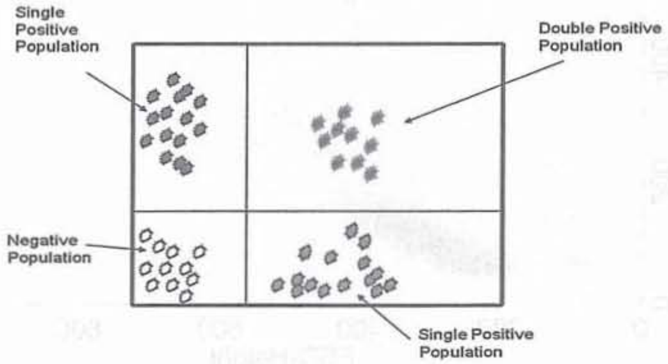

Figure 6. Schematic presentation of a 2-parameter histogram.

The flow cytometer allows the user to set the limits of positive and negative for each marker. Flow cytometric data are collected in list mode, where each electronic signal from a respective cell is displayed in the sequence in which it was acquired. List mode files can be edited at a later time to include or exclude any event. A basic advantage of flow cytometry is the ability to separate the data about the cells of interest from both the background and dead cells (e.g., noncellular particles or debris) when dealing with forward and side scatter and cells of other populations. The user must decide which signals are the actual light outputs from the cells and must construct an electronic gate to tell the computer to count as positive only the events that fall within the gate. Cell populations can vary widely depending on the tissue or cell source and the characteristics of the flow cytometer used. Gating allows the user to determine which outputs to consider actual events, so this process is of prime importance in standardizing flow cytometry data (*Figure 7*).

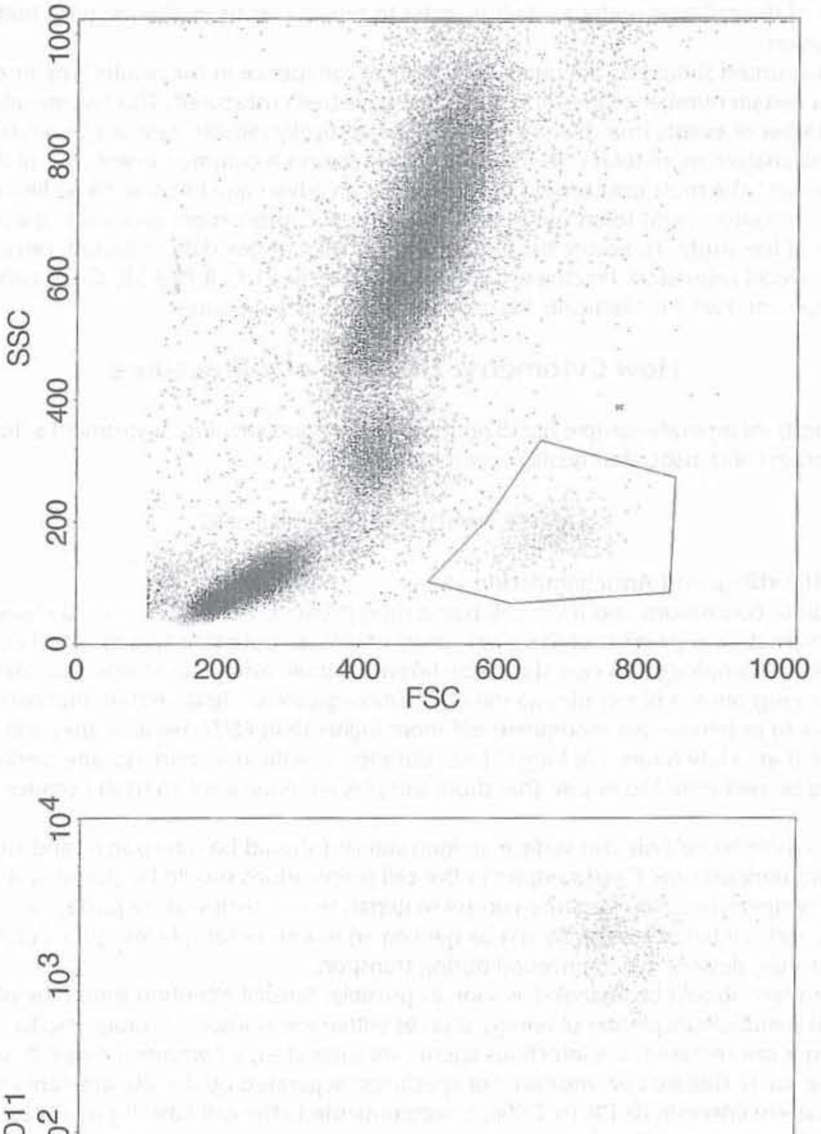

Figure 7. Gating of a cell population with low side scatter and high forward scatter, which is distinct from other cell populations in the sample.

A technique known as compensation can be used to separate spectral overlap of fluorochromes that have similar emission wavelengths. For analog-style flow cytometers manufactured before the late 1990s, compensation must be set before data acquisition. In modern digital instruments, compensation can be set either before or after data acquisition. The adjustment of compensation can be more of an art than a science, and considerable literature has been focused on the relative merits of various methods to determine the correct compensation for cell types or experimental conditions. The analyst should have

considerable knowledge of the cell type under analysis in order to prevent errors in phenotyping that can result from improper adjustment of compensation.

The number of events counted should be adequate for statistical confidence in the results. The instrument can be set so that data are collected until a certain number of events in a channel have been measured. This feature allows the operator to vary the length of time or number of events from the sample so that statistically reliable data are generated. Thus, a sample that measures a rare event will analyze more total cells than one that measures a common event. Use of list mode files, the electronic data files that represent the most uncensored data, provides an advantage because these files can be further analyzed after data acquisition. Investigators need to ensure that all raw data, documentation, protocols, specimens, and final reports are archived at the close of the study. To ensure the integrity and quality of raw data collected, researchers need to abide by U.S. FDA Regulations for Good Laboratory Practices (GLP) as prescribed in 21 CFR Part 58, Good Laboratory Practice for Nonclinical Laboratory Studies; and Part 11, Electronic Records and Electronic Signatures.

Flow Cytometry: Elements of a Procedure

Flow cytometric methods incorporate sample handling, preparation, and staining; instrument setup and operation; data collection, analysis, and storage; and associated quality control measures.

SAMPLE HANDLING AND STAINING

Sample Collection, Handling, and Anticoagulation

In order to make accurate conclusions about the cell-based drug product, the analyst should ensure that samples from cellular products are as representative as possible of the whole product. Blood, apheresis samples, and cell suspension products should be well mixed before sampling, and care should be taken to obtain adequate sample volumes.

Cellular samples containing human blood/plasma must be anticoagulated. Citrate-based anticoagulants (e.g., Anticoagulant Citrate Dextrose Solution A) or heparin are recommended more highly than EDTA because they will optimally preserve samples being held for more than a few hours. For longer-term samples, specific transport/storage media may be required, and validation studies should be performed to ensure that those samples are equivalent to fresh samples at the time of flow cytometric analysis.

Samples intended for whole blood lysis and surface antigen staining should be transported and stored, preferably on a slow oscillating mixer, at room temperature. Fixed samples or live cell preparations should be stored at 4°. When the sample may be exposed to extreme temperatures, temperature-control materials (room temperature packs, wet ice/cold packs, and insulation) may be necessary, and validation studies should be performed to ensure sample integrity. For critical or high-value samples, temperature-monitoring devices may be needed during transport.

After acquisition, specimens should be analyzed as soon as possible. Special attention should be given to situations in which cellular proliferation and metabolic depletion of energy sources within the transport/storage media can lead to apoptosis. When accurate counting is not required or if infectious agents are suspected, a commercial lyse/fix solution can increase storage time and reduce the risk of disease transmission. For specimens separated by density-gradient centrifugation, storage in a solution of buffered paraformaldehyde (0.1% to 2.0%) is recommended after cell labeling has occurred.

Sample Processing, Staining, and Fixation

Reagents used in sample processing, staining, and fixation should be qualified for their intended use. Further guidance is available in ICH Q6B, *Specifications: Test Procedures and Acceptance Criteria for Biotechnological/Biological Products*. When using reagent kits, follow the manufacturer's sample processing instructions.

Sample processing that involves centrifugation, washing, red blood cell (RBC) removal or lysis, or density-gradient separation is commonly done during many flow cytometric applications but can introduce error and artifact. Several techniques and reagents are available for RBC removal and lysis. Clinical grade [in vitro diagnostics (IVD) or analyte-specific reagents (ASR)] reagents are recommended for optimal quality, but artifacts can still occur. Density-gradient centrifugation can introduce error associated with variable cell losses among subpopulations that are being measured. These sources of error and artifact can be avoided by analyzing live whole blood whenever possible.

Most whole blood lysate instructions recommend staining at room temperature and in the dark. Many methods include a dilute fixative to prevent capping and internalization of fluorochrome. In contrast, cell preparations (density-gradient cell preparations, apheresis specimens, tissue culture) should be stained at 4°, washed with cold buffer, and stored cold until analyzed.

Fixation that also preserves cell surface antigens can be accomplished using commercial leukocyte preservatives or with buffered formaldehyde or paraformaldehyde. Very little validation of storage times, antibody binding, or fluorochrome intensity has been reported. Any laboratory that considers batch analysis of fixed specimens should validate these techniques thoroughly before implementing.

USE AND CHOICE OF FLUOROCHROMES

Fluorochromes

Fluorochromes are used for direct staining of cells or as agents bound to antibody or other reagents to stain cellular antigens or other structures. *Table 1* lists examples of common fluorochromes used for flow cytometry and their excitation and emission wavelengths. Wavelengths (nm) may vary slightly depending on the environment. Synthetic probes from specific manufacturers are also available.[1] Fluorochromes must match the spectral range for the lasers and filter sets specific to the user's flow cytometer.

When choosing fluorochromes for multicolor phenotyping, the operator should refer to established methods for the particular instrument. In general, the brightest fluorochromes should be matched with the antigens that are expected to have the lowest expression on the cell surface. The brightness of tandem dyes can also be reduced by the use of certain fixatives, some of which are less problematic than others. When designing a multicolor flow and tandem dye procedure that has not been previously validated, the operator should consult the manufacturer's technical service, compare tandem dye/fixative combinations, and validate the final fluorochrome combination to ensure sample-to-sample consistency.

Tandem fluorescent dyes are dual-conjugated fluorescent molecules. When the two labels are in close proximity, energy produced by the laser exciting the donor fluor is transferred to the acceptor fluor, releasing a photon at the emission wavelength of the acceptor fluor (also known as fluorescence resonance energy transfer, or FRET). For example, PECy5 will excite at the excitation wavelength for PE (565 nm), transfer energy to Cy5, and emit at the emission wavelength for Cy5 (670 nm).

Fluorescently Labeled Antibodies

Most commercially available antibody reagents are monoclonal, but polyclonal reagents may be available, and desirable, for some applications. The quality and specificity of an antibody can vary widely. Antibodies directed at a given antigen may differ in their binding specificity for different antigenic epitopes or in the strength of binding to the same epitope. If possible, use directly conjugated fluorochrome–antibody combinations that are IVD or ASR grade. Optimization of antibody concentration for the desired cell population is protocol specific but is generally accomplished by using increasing concentrations of antibody with a fixed number of cells to bracket the optimal brightness between autofluorescence and quenching. Quenching is caused by the prozone phenomenon, which occurs when excess antibody leads to immunoprecipitation and loss of fluorescence intensity. Further details are available in methods manuals such as *Current Protocols in Immunology* (Coligan et al. 1994).

Cell Surface Antigen Staining

Techniques for surface antigen staining vary with the type of specimen. Whole blood lysis techniques generally require surface labeling at room temperature in darkness for 15–30 min, followed by RBC lysis and, if desired, fixation. Published techniques use ammonium chloride (NH_4Cl) lysis of whole blood or marrow specimens followed by washing before antibody labeling for leukemia immunophenotyping. Mononuclear cell or cultured cell samples that are stained live should be kept at 4° or in an azide-containing buffer to prevent capping and internalization of the antibodies.

Intracellular Staining

Several standardized procedures also exist for labeling intracellular antigens and cytokines. The operator should consult the manufacturer's protocol and standardized reagents for these procedures. Because permeabilizing reagents vary among procedures and manufacturers, do not mix and match reagents. For cytokine labeling it is often necessary to use an activating step and a Golgi block to allow a sufficient amount of cytokine to accumulate for detection. If standardized reagents or procedures are not available from the manufacturer or if analysis of specialized functions is required, many common procedures and techniques can be found in sources such as *Current Protocols in Immunology* (Coligan et al., 1994).

Quantitation of Antigens

Some applications require quantitation of the average number and density of antigen molecules per cell in order to give a more complete picture of the immunological behavior of cells (e.g., in studies where extracellular antigens are expressed differentially in relation to activating stimuli). The intensity of an antibody/fluorochrome labeled cell preparation is compared to the intensity of a set of microbead fluorescence standards collected at the same PMT voltage settings. The standards are calibrated in molecules of soluble fluorescence (MESF) units, from which one can determine effective fluorescence to antibody (F/P) ratio, the number of antigen molecules per cell, and the density of available sites per cell.

INSTRUMENT SETUP AND OPERATION

Compensation

Most instrument manufacturers supply software and test reagents (usually fluorescent beads) to set PMTs and compensation in order to target values found with the most common clinical tests (e.g., lymphocyte phenotyping, CD34 analysis). The operator should also use a biological control such as preserved blood or mononuclear cells, which are commercially available. Compensation must be set before acquisition on analog instruments. Digital instruments' PMTs must be set correctly because the values for these settings cannot be changed once the list mode file has been generated. When rare events are examined and/or intracellular dyes (e.g., 7-amino actinomycin D [7-AAD], propidium iodide [PI], Syto-16, etc.) are used in conjunction with fluorescently labeled antibodies, the balance of PMT voltage and spectral overlap must be closely monitored.

[1] AlexaFluor series (InVitrogen/Molecular Probes) or the Cy series (GE Healthcare).

Autofluorescence (AF) is fluorescence above baseline in the absence of fluorochrome staining. This occurs in some cells, typically myeloid cells (especially alveolar macrophages) and cultured primary cells. If desired or necessary, AF can be measured directly on a fixed PMT voltage or can be calculated from a reference standard of fluorescent reference bead preparations (see *Quantitation of Antigens,* above). Avoid use of the 488 or 532 nm excitation wavelength and subsequent spectral compensation of the AF as an additional fluorochrome.

Data Acquisition and Gating Strategies

When possible, all events should be acquired in list mode, i.e., without selective gating of events. *Live gating,* defined as selective gating of events during acquisition, should be employed only when the desired subset is sufficiently rare that >2 million total events must be analyzed in order to count a significant (100 or greater) number of events of the desired population. List mode data can be acquired uncompensated when digital instrumentation is used, but most operators find that analysis is much less difficult and time-consuming if the data are in the range of proper compensation before acquisition. In addition, it is often desirable to set thresholds for exclusion of debris. Setting a forward scatter threshold, for instance, excludes events below a predetermined size in order to prevent the large list mode file size that can occur when these events are counted.

Use of Controls

Fluorochrome-conjugated bead preparations are used for standardizing PMTs and compensation and for quantifying the expression of specific markers. The use of biologic controls is also highly recommended. Stain the cell samples with an isotype control and primary and secondary antibodies to assess nonspecific binding unless the laboratory has ascertained by rigorous validation procedures that nonspecific binding does not interfere with assay results.

Antigen-positive and -negative cell populations (prepared and stained in a manner identical to that for the test articles) provide internal system suitability standards. Such control cell populations also allow the laboratory to assess lot-to-lot variations in antibody preparations and staining reagents.

Use of Dyes and Gating for Cell Viability

Cell viability dyes such as 7-AAD, PI, and TO-PRO iodide are commonly used to determine the proportion of dead cells in a cell therapy product. These dyes are typically excluded from live cells but pass through the cell membranes of dead cells, staining their DNA. Cell viability staining can be combined with surface membrane or intracellular staining to evaluate subpopulations and the proportion of live and dead cells stained with a given marker. Viability staining can also be used in conjunction with a membrane dye in flow cytometry-based cytotoxicity assays. These viability dyes should not be confused with the many apoptosis-detection reagents now available. Validation techniques for non-IVD viability dyes involve the preparation of a dead cell population that is added in serial dilution to a live cell product, and the cell mixture is then assessed for fidelity to the known proportion by staining with the dye of interest.

Cell Enumeration

Absolute cell count, expressed as the number of cells in a given sample volume, can be determined by dual- and single-platform methods. The dual-platform method relies on a separate automated cell-counting instrument or manual counting method to first enumerate the cell population. The percentage of a subset(s) of interest is then determined by flow cytometry, that percentage is multiplied by the cell count, and the result is divided by 100. Single-platform methods enumerate the cell population and subset counts directly by counting the cells in the sample simultaneously while counting reference beads that have been added to that sample volume in a known concentration. Reference beads are often provided as a bead suspension that is added to the specimen. Alternatively, a given volume of sample may be added to a known number of reference beads provided as a solid phase matrix in polystyrene tubes. These approaches are subject to pipetting error, so extra care must be taken to ensure accuracy and reproducibility.

Instrument Setup and Quality Assurance

Each laboratory should have a quality plan that defines the standard operating procedures for instrument setup and calibration, as well as regular instrument monitoring, maintenance, and cleaning. Instrument logs should document these activities and operators. In general, the instrument manufacturer's quality program should be followed unless a suitable alternative has been established.

Instrument parameters such as laser current, voltage, output, and PMT voltages during calibration should be monitored and recorded whenever the instrument is in use. Careful monitoring of instrument setup parameters can be helpful in detecting trends and predicting laser or PMT failure. Biological control testing results should also be monitored and recorded to detect and prevent analytical method drift.

The laboratory should also participate in a proficiency-testing program that reflects the test menu. Depending on need, this could range from a formal program such as the one administered by the College of American Pathologists (CAP) to simple sharing of specimens and analysis with another laboratory. Ensuring that operators are trained, qualified, and periodically evaluated for proficiency to perform specific procedures will also help ensure the consistency of techniques and controls.

DATA MANAGEMENT AND STATISTICAL CONSIDERATIONS

Data Management and Storage

Quality control assays and sample test assays (in list mode) should be stored in a manner that complies with regulatory requirements applicable to the laboratory. This can be accomplished by transfer to fixed drives, removable media, or to a server such as a commercial laboratory information system. Storage of results should always be traceable to the original FCS list mode file, instrument settings, and quality control parameters for that particular specimen. Data should be backed up to avoid loss of files. Storage and backup procedures should also be established for manual (paper) records that may be used for calculations and summary data.

Data Analysis and Statistical Considerations

For most flow cytometry applications, data analysis involves displaying the data from list mode files or live gating in a plot (single-parameter histogram plot, two-parameter dot plot with regions, or three-dimensional plot), and measuring the distribution of events within that plot. Further analysis of data within selected populations can be done by gating on specific cell populations. Description of the data typically includes the percentage of events within the population with a given characteristic (forward scatter, side scatter, fluorescent marker). The numerator is the number of events with the characteristic, and the denominator is either the number of total events counted or the number of gated events counted. For two-dimensional plots, analysis is typically done using computer software that analyzes and reports regional (e.g., quadrant) statistics. Because cell population clusters may shift their positions from one data file to the next, software has been developed for cluster analysis.

Statistical analysis of quantitative flow cytometry applications differs from qualitative applications in which a cell is considered either positive or negative for a given marker. For a typical quantitative application in which the number of molecules on the cell surface is estimated, the mean or median fluorescence intensity of the sample cells labeled with a fluorescent antibody bound to the molecule of interest can be compared to appropriate controls, including standard curves of cells or particles with known quantities of that molecule/antibody.

A common practical consideration for flow cytometric analysis of cell therapy products, especially autologous and related donor allogeneic products, is that sample size for analytical testing is often limited because of the limited cell content of the therapeutic product itself. This creates special challenges if cells containing the flow marker of interest are rare events. In these cases, before making a decision about sample size, the user must consider the expectations for detecting the rare events within a given number of total cells (i.e., prevalence, variability, sampling error) in relationship to the desired precision of the estimate.

Quality and Standardization

Standardization of flow cytometry practices and equipment requires validation, quality assurance (QA), and quality control (QC) practices. Although flow cytometry is used widely in both research and clinical laboratories, testing of cells for the development of clinical diagnostic and therapeutic applications is increasing, leading to more comprehensive regulatory requirements and attention to standardization. As an example, flow cytometry operators have traditionally used fluorescent microspheres (beads) or cells for instrument setup and QC, frequently based upon manufacturers' recommendations. However, consistent instructions about how these control standards should be applied to instrument setup and QC remain elusive.

Properly applied, validation provides documented evidence that the manufacturing or testing process consistently produces product that meets predetermined specifications. Based on a thorough understanding of critical process parameters, validation helps to define product quality and helps to ensure a consistent and well-controlled manufacturing or testing process. Validation of flow cytometric methods should incorporate instrument qualification, analytical method validation, and operator qualification.

DOCUMENTATION

GLP and GMP processes require appropriate documentation such as standard operating procedures (SOPs) for all lab processes. SOPs must also be periodically updated and approved to reflect current practices. Training and qualification are required so that laboratory staff have the appropriate level of competence for their assigned responsibility. Operator competencies must be continually reviewed and assessed in relationship to SOPs and policies.

Integrating both internal and external quality processes is an important element of quality assurance. These involve equipment validation, manufacturing controls and limits, and product specifications. Process and equipment validation processes generally require installation qualification (IQ), operational qualification (OQ), and performance qualification (PQ).

EQUIPMENT AND ASSAY QUALIFICATION

IQ establishes that the instrument is received as designed and specified, and that it is properly installed in a suitable environment. This generally means checking physical and facility requirements to determine whether the flow cytometer can be suitably installed. Qualification factors verified typically include temperature, humidity, space, and electrical facility capabilities in

relationship to the instrument manufacturer's requirements. IQ procedures also ensure that all hardware and software components purchased are installed properly by the instrument manufacturer's representative.

OQ demonstrates that an instrument will function according to the manufacturer's specifications. This generally means component-level testing by the instrument manufacturer's representative or using a manufacturer's validation package that guides the end user to perform this function. Where possible, these tests should have specifications with corresponding quantitative control limits. This testing ensures that the instrument hardware and software are operational by comparison with the manufacturer's specifications.

PQ demonstrates that both the instrument and the assay consistently perform according to specifications. For flow cytometry, these specifications are generally determined by the laboratory performing the flow cytometric testing and usually include daily instrument and assay control test specifications. For specific assays, PQ should incorporate standardized methodology, application-specific setup and compensation, and specifications for linearity, precision, and accuracy of reported assay results. On some digital flow cytometers, a baseline instrument setup may be necessary in order to determine the optimal instrument settings for a given assay.

INSTRUMENT PERFORMANCE

Performance specifications may be identified by the flow cytometer manufacturer and may not address all of the operator's specification requirements. After identifying the manufacturer's specifications, the laboratory must establish specifications that are appropriate for the hardware configuration(s) that will be used, and the specifications must be standardized. As an example, the manufacturer may have a base specification for a four-color dual-laser flow cytometer. If the base specification calls for the standard red diode 635-nm laser but a helium–neon air-cooled 633-nm laser is substituted, the base specifications are no longer valid for the system. Similarly, if the specifications are based on the use of a 660-nm band-pass filter but a 675-nm long-pass filter is substituted, the base specifications are not valid because of differences in the emission filter characteristics.

PERFORMANCE MONITORING

Instrument performance can be monitored on a daily basis, using commercially available fluorescent beads. Light detectors such as PMTs, photodiodes (PD), and avalanche photodiodes (APDs) are used in most systems to detect signals, and their gains can be changed to increase or decrease the sensitivity of the detectors. Therefore, monitoring the settings of these detectors is as important as monitoring the signals, and these settings should be associated with each raw data file. The easiest approach is to maintain the same instrument detector settings from day to day and to measure the intensity of the fluorescence signals. This approach should be implemented for all parameters that must be validated using the appropriate beads. Instrument sensitivity is based on the ability of the detection system to resolve dim cell or bead populations. For this reason, measuring the coefficient of variation (CV) of dim to moderately intense fluorescent bead populations is a means to monitor fluorescence sensitivity on a daily basis. The instrument manufacturer's recommendations should be used to monitor performance.

Ambient high temperature can affect laser and PMT performance and should also be monitored on a daily basis.

Incorrect compensation for spectral overlap can strongly affect data during multicolor analysis. Many approaches have been established for this purpose, and recently mathematical algorithms have been used rather than analog circuitry. Algorithms, such as those that use matrix algebra, enable the operator or investigators to apply objective criteria to compensate for spectral overlap after all data have been collected. On older systems, the standard approach has been to compensate using a subtractive hardware adjustment to the observed preliminary data before all data have been collected. This approach can be subjective and is not as likely to produce accurate results as compensation by newer methods. Antibody-bound capture beads are valuable compensation tools because they can be used with the same antibody and tandem dyes for all fluorophores that will be used on cells. Validate the use of beads in place of cells for compensation purposes.

STANDARDS

Microsphere-based fluorescence standards for flow cytometry have been categorized by their purpose:

- Type I standards are alignment standards that are used to make adjustments to the instrument's optical alignment. These are typically used by field service engineers and by users of operator-adjusted systems to check the optical signal alignment in order to improve instrument sensitivity. These particles are typically small (≈ 2 µm) and bright, and they provide the most uniform illumination.
- Type II standards are reference beads and are the most commonly used bead standards. These typically are used on a daily basis, have dim to moderate fluorescence intensity, and can be obtained with various attached fluorophores. These can be used to mimic cells and, with dedicated software, to determine relative instrument sensitivity.
- Type III standards are used for fluorescence calibration. These are used for specialized applications that require calibration of one or more fluorescence detectors for quantitation of molecules of fluorochrome. Determination of the ratio of fluorophores to antibody (F/P ratio) allows subsequent calculation of the number of antibodies bound per cell.

INSTRUMENT SETUP AND QUALITY ASSURANCE

Instrument setup and quality assurance should be activities independent of the biological assay. Many variables related to instrumentation can lead to artifacts in the biological assay results. Two activities can be used for instrument quality assurance: baseline setup and daily setup.

Baseline Setup

On newer digital instruments it is desirable to establish a baseline setup of instrument settings that provide optimal sensitivity. This setup is not a daily procedure but should be performed if the instrument configuration is changed or if the instrument is serviced. Because PMT voltages and instrument configuration can strongly affect instrument sensitivity, this method should be used to provide objectivity as well as improved sensitivity. PMT voltages can be increased to a range that provides a lower CV (*Figure 8*). These settings can be, but may not always be, used for the biological assay.

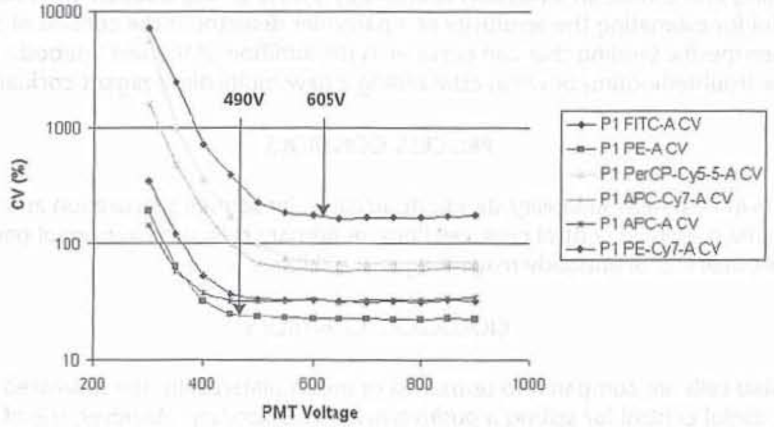

Figure 8. PMT voltages can be increased to a range that provides a lower CV.

Daily Setup

Type II standards, as reference particles, can be used to monitor signal intensity, separation of moderately bright and dim particles, and signal resolution. Fluorophore-matched beads provide a compensation tool as well as a means of knowing that the instrument is able to detect those wavelengths. Fluorophore-matched beads, however, do not have the fluorescence uniformity required for measuring CVs. Based on the optical performance of the instrument, CVs are best measured using dim and moderately bright hard-dyed beads such as coumarin-dyed microparticles that fluoresce in a broad spectral range.

It is easy to confuse assay controls and instrument controls. Beads provide a fluorescence uniformity and consistency that cannot be obtained with cells, and, accordingly, beads are useful for monitoring instrument performance. For this reason, it is better to use a process control cell preparation to verify compensation and fluorophore acceptability.

Instrument settings for daily setup are generally the same settings used for assays. Not all assays can be used with the same instrument settings, and it is not always necessary to perform these activities for every instrument setting unless it is required by validation.

Daily activities include consistent instrument setting from day to day, use of a broad range of dim to moderate intensity beads, and monitoring key parameters, including bead fluorescence intensity (absolute and % CV), PMT values, temperature, laser power, and laser wavelength.

ASSAY QUALITY CONTROL AND QUALITY ASSURANCE

Assay-specific instrument settings should be established to demonstrate that all cell populations can be identified in bivariate plots for fluorescence and light scatter. Most importantly, positive populations must be on scale and properly compensated. This is critical when exciting cells with red lasers, which do not cause cells to generate significant autofluorescence. For this reason, it is important to verify appropriate PMT settings so that the positive population is in the upper part of its fluorescence scale, because it may be extremely difficult to identify the negative cells.

Fluorescence compensation is a critical adjustment. Digital instruments provide objective offline adjustments during analysis, and detailed instructions for proper compensation settings are available. Using cells or capture beads stained with a single antibody-fluorochrome is generally the best approach, but specialized fluorochrome-labeled bead mixtures can also work well to compensate for multicolor acquisition and analysis.

ISOTYPE CONTROLS

An isotype control is a negative-control antibody that should not react with the antigen of interest and is the same isotype as the test antibody. Myeloma protein or immunoglobulin that has no specificity to the species being tested and has the same Ig

chain class and subclass as the test antibody is conjugated to a fluorochrome identical to that on the test antibody. Ideally, very little or no binding occurs when the isotype control is used in parallel with the test. Idiotypic nonspecific binding frequently occurs, however, and is independent of the isotype of the antibody. This is most likely related to other differences in antibody chemistry and can be especially problematic with rare-event detection assays, such as those for hematopoietic stem cell assays in peripheral blood.

FLUORESCENCE MINUS ONE CONTROLS

Fluorescence minus one (FMO) controls are used to control nonspecific staining during a multicolor assay. After compensation has been set, a tube containing all of the fluorochrome-labeled antibodies, except one, is run. If the compensation has been properly set, any positive fluorescence in the parameter corresponding to the missing fluorochrome-labeled antibody is caused by nonspecific staining and can be an indication of antibody excess or degradation of related tandem dyes. Although FMO controls are very useful for estimating the sensitivity of a particular detector in the context of other reagents, the controls do not take into account nonspecific binding that can occur with the addition of the test antibody. FMO control tubes are most appropriately used for troubleshooting or when establishing a new multicolor reagent cocktail.

PROCESS CONTROLS

Process controls, also known as system suitability standards, account for sample preparation and data acquisition. They can include commercially available preserved control cells, cell lines, or primary cells such as normal peripheral blood. Process controls can also be used to test new lots of antibody reagent against old lots.

BIOLOGICAL CONTROLS

When treated or stimulated cells are compared to untreated or unstimulated cells, the untreated or unstimulated cells may in some cases be the most useful control for setting a positive/negative boundary. However, use of isotype controls may also apply to these situations, because stimulation may lead to Fc receptor upregulation, leading in turn to increased background staining, the presence of which can be elucidated by an isotype control.

FLOW CYTOMETRY APPLICATIONS FOR CELLULAR SAMPLES AND CELL THERAPY PRODUCTS

A wide variety of flow cytometry applications have been developed for research, clinical diagnosis and monitoring, drug development, and cellular product characterization and quality assessment (i.e., control to allow batch release). Traditional clinical applications include monitoring HIV disease and diagnosis and monitoring leukemia and lymphoma. Both pharmaceutical and academic research laboratories have increasingly broadened the application of flow cytometry from immunophenotyping to functional cellular assays, as well as microsphere-based multiplex assays capable of measuring multiple functional parameters on individual cells. Current functional assays include those that allow direct study of cellular activation status by measuring intracellular cytokine production or secretion of chemokines or cytokines, using a ligand-binding sandwich assay on microspheres.

Immunophenotyping

Flow cytometry allows the characterization of leukocyte subtypes by labeling cells with fluorochrome-conjugated monoclonal antibodies. The CD system defines monoclonal antibodies that recognize unique cell-surface antigens. Many clinical applications take advantage of flow cytometry's unique capabilities to measure multiple CD antigens on thousands of individual cells.

CD4 ENUMERATION

In the early 1980s, investigators discovered that HIV infects CD4 T cells and that a patient's peripheral blood CD4 T cell count is a useful indicator of immune status. CD4 enumeration has become the most commonly used diagnostic test in HIV-infected patients to determine the need for anti-retroviral (ARV) therapy and for monitoring the effectiveness of ARV drugs. T cell subset counts are typically expressed in terms of cells per microliter and as a percentage of lymphocytes, using a standardized reagent, software, and instrument system.

LEUKEMIA AND LYMPHOMA

Multidimensional flow cytometric analysis enables identification of aberrant cell populations in bone marrow, lymphatic tissue, and peripheral blood of patients with leukemia or lymphoma. This is accomplished with oncology-relevant and lineage-specific cocktails of monoclonal antibodies. With optimal fluorophores and improved optical/electronic configurations in flow

cytometry instrumentation, additional cell markers can be detected to more precisely identify leukemia or lymphoma cell phenotypes and to improve the physician's assessment of patient status. Rare-event detection methods have improved the ability to detect minimal residual disease.

DENDRITIC CELLS

Dendritic cells (DCs) act as antigen-presenting cells that can influence the nature and strength of the immune response to specific antigens. This finding has led to the development of DCs as cell-based therapies for cancer, infectious disease, and autoimmune disease. DCs are morphologically and phenotypically diverse and can be derived from several cell types. Two major DC lineages, known as myeloid and plasmacytoid DCs, can be segregated on the basis of their expression of CD11c and CD123, respectively. Additionally, the expression of the costimulatory molecules CD80 and CD86 can be monitored to determine DC maturation state.

STEM AND PROGENITOR CELLS

CD34 expression is commonly used to characterize hematopoietic stem cells (HSCs) in peripheral blood, cord blood, bone marrow, and purified HSC preparations from these sources. Flow cytometric identification and enumeration of HSCs is possible by using monoclonal antibodies specific to the CD34 class III epitope, along with other well-characterized reagents, analysis software, and protocols. The reagent combination of anti-CD45, anti-CD34, and a viability dye such as 7-AAD is widely used for clinical applications. Increasing interest in developing cell-based therapies from embryonic, fetal, and adult tissue sources has led to the use of a wide variety of conventional and novel phenotypic markers for characterization of source cells and their more differentiated progeny. Flow cytometric assays are being developed as part of assay batteries to assess differentiated cellular products derived from pluripotent stem cell sources. These assays will help define appropriate numbers and types of desired cell populations, as well as help detect undesired cells such as residual pluripotent cells that could prove tumorigenic in the recipient.

LEUKOCYTES

Leukoreduction of blood products is a process used to produce blood products with a residual leukocyte content of less than 5×10^6 per unit. Clinical data suggest that nonhemolytic febrile transfusion reactions can be prevented by leukodepletion. Leukodepletion also prevents alloimmunization to HLA antigens in patients who will repeatedly require transfusion of blood products. Flow cytometry is routinely used to quantitate leukocyte contamination in leukocyte-depleted blood products.

PLATELETS

Flow cytometry is a rapid and useful method for diagnosing many primary thrombocytopathies related to defects in structural or functional glycoproteins (e.g., abnormal expression of gpIIb/IIIa in Glanzmann thrombasthenia or gpIb in Bernard-Soulier disease). The use of thiazole orange, a fluorescent dye that binds RNA, allows immature platelets (reticulated platelets) to be quantified. The reticulated platelet count can be used to determine the rate of thrombopoiesis. This measurement can separate unexplained thrombocytopenias into those with increased destruction and those with defects in platelet production.

ERYTHROCYTES

Rhesus D-negative women receive prophylactic Rh-immunoglobulin to prevent alloimmunization from $Rh(D)^+$ erythrocytes (RBCs). If fetomaternal hemorrhage is suspected, the mother's blood is tested for the presence and quantity of fetal RBCs, using fluorescently labeled antibodies to the Rh(D) antigen or to hemoglobin F.

The reticulocyte count is used to help determine whether the bone marrow is responding adequately to the body's need for RBCs and to help classify different types of anemia. Reticulocyte counts are based on the identification of residual ribosomes and RNA in immature nonnucleated RBCs. Flow cytometric enumeration of reticulocytes and their discrimination from mature RBCs uses fluorescent dyes that bind the residual RNA (e.g., thiazole orange).

Bead-Based Immunoassays

Multiplex microsphere-based flow cytometric assays combine a series of particles of discrete size and/or fluorescence intensity with matched antibody pairs to allow simultaneous detection of multiple soluble analytes on a flow cytometer. The flow cytometer's capacity to discriminate particles on the basis of size and color enables determination of multiple results from a single tube or well. Many investigators use such assays to measure secreted chemokines or cytokines, kinases, and anti-HLA antibodies.

Proliferation Assays

DYE INCORPORATION INTO DNA

Bromodeoxyuridine (BrdU) is a thymidine analog that can be incorporated into the DNA of cells during S phase, and then can be detected using specific, labeled monoclonal antibodies. By pulsing a stimulated cell culture with BrdU, cells can be identified that have proliferated (passed through S phase) during the time of the pulse. This assay has become a useful alternative to ^{3}H-thymidine incorporation as a measure of proliferation because it is nonradioactive and can identify phenotypes of proliferating cells by the use of multiple markers and flow cytometry.

DYE INCORPORATION INTO CELLULAR PROTEINS OR CELL MEMBRANE

Cell-tracking dyes such as carboxyfluorescein succinimidyl ester (CFSE) and PKH26 have proven useful in the assessment of cell proliferation. CFSE binds covalently to cytosol and membrane proteins, and PKH26 binds non-covalently to cell membranes. When cells divide, CFSE/PKH26 labeling is partitioned equally between the daughter cells, which are therefore half as fluorescent as the parents. The fluorescence of each cell is further halved with each succeeding generation. This property makes CFSE/PKH26 assays useful not only for determining the fraction of cells that have proliferated in a stimulated culture but also, under ideal conditions, the number of generations that have elapsed. In this manner, the precursor frequencies of small populations that have proliferated over several days in culture can be calculated.

Functional Assays

INTRACELLULAR CYTOKINE EXPRESSION

Cell surface and intracellular labeling techniques have been applied to the identification of cell subsets with specific functional characteristics. For example, brief stimulation of cells such as PBMC with protein or peptide antigens can result in the expression of activation markers and cytokines that can then be measured along with other phenotypic markers on the surface of the responding cells. The use of a secretion inhibitor such as brefeldin A or monensin allows the intracellular accumulation of cytokines. The cells are then fixed, permeabilized, and detected by a flow cytometric method. Such assays are useful for monitoring T cell subpopulations that respond to vaccines, infectious disease agents, or cancer. Functional properties of other cell types, including monocytes, DCs, and NK cells, can also be monitored using functional assays with appropriate stimuli.

KINASES

Phosphorylation-specific cell activation intermediates can be identified using phospho-specific antibodies and flow cytometry. These reagents are useful for mapping intracellular signaling mechanisms, often in the context of other cell-surface phenotypic markers. Thus, multicolor flow cytometry can provide single-cell assessment of intracellular activation states in complex cell populations. These assays may have utility in detecting altered signaling states in cancer cells or in directing appropriate therapies based on the signaling properties of a patient's tumor cells.

APOPTOSIS

Apoptosis, commonly described as programmed cell death, is the process of cell death caused by regulated, physiologic processes. The apoptotic process manifests itself as a series of morphological, biochemical, and molecular changes to the cell and can be initiated by external or internal stimuli. A central event during apoptosis is the activation of caspases, a family of proteolytic enzymes. Caspases are synthesized as inactive proenzymes and are activated by other caspases or by similar molecules. They form a cascade that can lead to the cleavage of various cytoplasmic or nuclear proteins. One of the caspases that is reported to be crucial for the apoptotic process is caspase-3, which is activated during the early stages of apoptosis.

Flow cytometric methods for detecting apoptotic cells include measuring morphology, changes in membrane structure, DNA cleavage by endonucleases, and mitochondrial membrane potential. Natural or artificial caspase substrates or antibodies against the activated form of the enzyme have also been used for this purpose.

CELL VIABILITY

Flow cytometry is often used to discriminate live cells from dead cells. The principle of nucleic acid dye exclusion is the basis of this application. A nucleic acid dye such as PI or 7-AAD is added to cells in suspension. During flow cytometric analysis, cells that fluoresce above background are considered nonviable because they cannot exclude the dye, which fluoresces when it binds to cellular DNA.

Flow Cytometry Immunoglobulin Assays

FLOW CYTOMETRY CROSS-MATCHING

Before organ transplantation, flow cytometry cross-matching (FCXM) is performed on recipients to screen for anti-HLA antibodies that can cause rejection. Anti-HLA antibodies are detected by incubating HLA-defined leukocytes, B-cell lines, or HLA antigen-coated beads with the serum sample, followed by anti-human immunoglobulin fluorescently labeled antibodies. Leukocytes are immunostained to identify T and B cells in order to distinguish between anti-HLA class I and II activity, respectively. In addition, screening of blood donations for anti-HLA antibodies is also increasingly employed to identify donors whose blood products may have increased risk of causing transfusion-related acute lung injury (TRALI) in recipients.

ANTI-HUMAN NEUTROPHIL ANTIBODIES

Anti-human neutrophil antibodies (HNA) can cause neutropenia and have been implicated in TRALI. Autoimmune neutropenias may develop in patients who have autoimmune disorders such as Felty syndrome, systemic lupus erythematosus, and Hashimoto thyroiditis. The absence of anti-HNA antibodies narrows the differential diagnosis to nonimmune causes such as bone marrow failure, myelodysplasia, or marrow-infiltrative processes. Flow cytometry can detect anti-neutrophil antibodies and can confirm the origin of neutropenia or TRALI.

ANTI-HUMAN PLATELET ANTIBODIES

Anti-human platelet antibodies (HPA) are detected by both indirect and direct flow cytometry-based platelet-associated immunoglobulin assays. In autoimmune thrombocytopenic purpura, free serum antibodies are not found as frequently as are platelet-bound antibodies. In cases of alloantibody formation, serum antibodies may be detected without evidence of platelet-associated antibodies.

FLOW CYTOMETRY ASSAY TROUBLESHOOTING

When developing a flow cytometry method, first determine the ultimate purpose of the assay. For assays intended for research, the cell samples, reagents, and protocols may be difficult to standardize. Assays intended for patient diagnosis or to qualify a cellular product for release before administration to a patient demand more stringent assay and sample standardization. Regulatory guidelines, the type and stage of clinical investigation, and the ultimate purpose of the assay determine the level of assay rigor required.

Flow cytometry assay development should include the establishment and qualification of staining, handling, instrument, and analysis parameters and limits. Assuming that the method has been well developed, the operators are properly trained, the instrument has been properly set up, appropriate assay and instrument controls have been applied, and, if necessary, the instrument and method validations have been performed, operators may encounter and address instances when troubleshooting is necessary.

The most common flow cytometry challenges are high fluorescence or side scatter background, abnormal event rates, high fluorescence intensity, and low fluorescence signal. Approaches to alleviating these issues are described below.

High Particulate Background

Excessive cell handling (e.g., vortexing), improper fixation, and bacterial contamination of the cells can all increase the particulate background. In addition, if the instrument's forward threshold is set too low, cell debris will be detected as events. Gentle cell handling, fresh reagents, and appropriate instrument settings help ensure consistent side scatter profiles.

High Fluorescence Background

High fluorescence intensity can be attributed to excessive antibody concentration, inadequate cell washing, or inadequate Fc receptor blocking. In addition, improperly high instrument PMT gain can also result in a high background. Consistent antibody concentration and cell density, adequate washing and blocking, and appropriate instrument settings will help avoid abnormally high fluorescence background.

High Event Rate

Abnormally high event rates are often attributed to high cell densities during antibody staining or in the final cell sample. Inadequate mixing and settling of the cell sample can result in high cell event rates, as can improper or inconsistent gating.

Low Event Rate

Cell clumping, low final sample cell densities, blockages in the instrument fluidics, or improper gating can often result in abnormally low event detection. Proper cleaning, maintenance, and setup of the instrument, as well as consistent staining protocols, can help achieve consistent results with sufficient sensitivity.

High Fluorescence Intensity

As in the case for high fluorescence background, high mean cell fluorescence can result from too much labeled antibody, inadequate or inconsistent cell washing, or inadequate blocking. Including detergent in the wash buffer, especially during intracellular staining, can help prevent nonspecific antibody binding.

Weak Fluorescence Intensity

Many factors can result in weak fluorescence intensity. Instrument parameters such as poor laser alignment, improper compensation, improper setup, inconsistent gain settings, and weak laser output can all negatively affect fluorescence intensity. In addition, cell physiology or reagent preparation issues, such as insufficient antibody concentration, labile or secreted target antigen, poor-quality or improperly stored reagents (resulting in fluorochrome fading), or inaccessible target antigen, can all result in a weak signal. Adequate assay development, proper instrument maintenance, and adherence to qualified protocols can all improve the fluorescence signal intensity.

Flow cytometry enables investigators to analyze cells for many different applications. Types of immunophenotypic and functional assays are increasing in number and in scope. The presence of proteins and cellular processes and detection of rare or abnormal cell populations can be studied. The reader is referred to the technical literature for application and method details.

REFERENCES

Coligan JE, Kruisbeek AM, Margulies DH, Shevach EM, Strober W. *Current Protocols in Immunology.* Fourth ed. Hoboken, NJ: John Wiley and Sons; 1994.

Shapiro HM. *Practical Flow Cytometry.* Fourth ed. Hoboken, NJ; John Wiley and Sons; 2003.

General Chapters

〈1029〉 GOOD DOCUMENTATION GUIDELINES

INTRODUCTION

Purpose

Documentation can be viewed as the foundation of all quality systems because clear, complete, accurate records are essential to all operations and procedures. This general chapter provides guidelines on good documentation practices for the Good Manufacturing Practice (GMP)-regulated industries, to be used in the production and control of pharmaceutical products, active pharmaceutical ingredients (APIs), excipients, dietary supplements, food ingredients, and medical devices. This chapter describes the underlying principles of proper documentation for GMP operations to assist the user while working with GMP activities. These guidelines should be helpful for building the basic foundation of a quality system that will ensure proper documentation as well as record integrity and control.

Scope

This chapter covers different levels and types of documentation, including paper and electronic records that consist of raw data, reports, protocols, and procedures related to manufacturing controls and analytical data. The chapter also includes recommendations on information that should be recorded for various types of GMP documents. Electronic systems should be developed to meet guidelines described in this chapter.

This chapter does not provide information about all applicable current legal requirements, nor does it affect any applicable current requirements under GMP regulations.

PRINCIPLES OF GOOD DOCUMENTATION

All steps related to the manufacturing, testing, packing, or holding of pharmaceutical products, APIs, excipients, dietary supplements, food ingredients, and medical devices should be documented.

Good documentation principles for manual or electronic records include the following, as applicable:

- Records should be clear, concise, accurate, and legible.
- Data entries should be recorded promptly when actions are performed.
- Backdating and postdating are not allowed.
- All corrections to the original entries should be initialed and dated (or captured within an electronic audit trail), with an explanation included in cases where the reason for the change is not obvious.
- Data entries should be traceable to the person who made the entry.
- Uncommon abbreviations and acronyms should be defined.
- Controls should be in place to protect the integrity of the records.
- In the event that ink may have faded over time (e.g., thermal paper), a copy can be used with verification of its accuracy; the copy should be initialed and dated.
- Notebooks, data sheets, and worksheets should be traceable.
- An adequate documentation system is needed to ensure data integrity and availability of current and archived records.
- Records should be retained per regulatory requirements and be readable during the retention period.
- All pages should be paginated. Attachments (supporting documents) should be paginated with a reference to the parent document.

DATA COLLECTION AND RECORDING

Formats for data collection and recording include, but are not limited to, the following:

- Paper forms, data sheets, and worksheets
- Notebooks and logbooks
- Instrument printouts
- Electronic data obtained with a system such as an electronic data system, laboratory information management system (LIMS), or electronic laboratory notebook (ELN)

All data should be permanently recorded directly and legibly when the activity is performed. If it is paper record, then it should be recorded in indelible ink. All data entries should be traceable to who made the entry and when. Additionally, electronic records must meet the requirements of the *Code of Federal Regulations Title 21* (21 CFR), Part 11.

Any change to an entry should be made in a way that does not obscure the original entry, with an explanation in cases where the reason for the change is not obvious. Changes should be traceable to who made the change and when the change was made. For clarity, predefined correction codes may be used, for example, WD = wrong date.

Notebook pages and worksheets should be used consecutively, and information should be recorded chronologically. GMP records such as batch records, test methods, and specifications should be given unique identifiers and use version control for the documents.

All data entry fields should be completed. A single line and/or "N/A" should be drawn through portion(s) of a page that are not used. If the record is in an electronic system and the system provides traceability of who filled each field and when, the field can be left blank.

Decimals less than one should be preceded by a zero. Rounding rules and guidelines on significant figures are described in *USP–NF General Notices and Requirements*.

All dates should be expressed in a format that clearly indicates the day, month, and year.

All GMP records for data collection should undergo appropriate review and signature by a second person to confirm the accuracy, compliance, and completeness of the entries. Additional signatures may be required on the basis of local Standard Operating Procedures (SOPs) for different levels of review (e.g., performed by, verified by, checked by, reviewed by, approved by) as accountability steps.

An official record of signature and initials should exist for each employee or can be contained within the document. Controls should be in place for assigning signature approval requirements and delegation of signature authority, when needed.

In the event that verified copies of raw data have been prepared, the verified copy may be substituted for the original source as raw data.

All multiple-page data sheets or instrument printouts in paper form should be signed/initialed on the first or last page with a note indicating the total number of pages. The first page and all subsequent pages should be uniquely identified to the activity being performed, such as the notebook reference, study number, or worksheet reference.

DIFFERENT TYPES OF GMP DOCUMENTS

The following or similar documents should include the following information, but are not limited to these items.

Laboratory Records

Laboratory records should be organized to ensure that the records are concise, clear, legible, and accurate, and detail the following:

- Description of materials, such as reagents. This information typically includes the material name, manufacturer and lot number, titer or concentration, expiration date, grade (if known), and a reference to the lab notebook if prepared in the lab
- Identification of equipment used. This information typically includes equipment name, unique control number, and calibration expiration date, as applicable
- Procedures used
- Measurements
- Formulae and calculations
- Results and conclusions

Equipment-Related Documentation

All equipment used in manufacturing, testing, packing, or holding of a raw material, component, API, finished product, or other similar item should be maintained and qualified for its intended use. The documentation related to equipment includes:

- Policies and procedures for operation and maintenance
- Equipment use
- Maintenance records
- Calibration or qualification records
- Instrument labeling

Deviations and Investigations

All aberrations, anomalies, and exceptions related to manufacturing, testing, packing, or holding of a raw material, component, API, finished product, or other similar item should be documented. Once documented, the deviation should be evaluated and investigated, as appropriate. Procedures should be in place for documenting, evaluating, and investigating such events. Documentation of the investigation should include the following:

- Description of the event
- Root-cause investigation
- Evaluation of data trend
- Responsibilities of people involved in the investigation or deviations
- Impact assessment
- Corrective Action and Preventive Action (CAPA) with timelines
- Review and approval

Batch Records

A Master Batch Record (MBR) is created as a template for the manufacture of a specific product. An Executed Batch Record, based on the MBR, is used to document the steps and materials involved in the production of a specific batch of a raw material, component, API, finished product, or other similar item. Typically, the following sections are included in a Batch Record, and should be approved by an appropriate representative from the manufacturing site or packaging site:

- Header information (e.g., product name, batch number, manufacturing site)
- Unit of operation (e.g., blending, coating, filling)
- Manufacturing process
  - — Target weights (raw materials)
  - — Conditions (time, temperature)
  - — Deviations and investigations
- In-process sampling or testing
- Other critical information, as applicable
- Sampling plan for release, stability, and retention
- Review and approval

Certificate of Analysis

The purpose of the Certificate of Analysis ("C of A" or CoA) is to report analytical results for a specific batch of a raw material, component, API, finished product, or other similar item. Typically, the following sections are included on a C of A and should be approved by an appropriate representative from the testing site:

- Vendor, supplier, or manufacturer information (as applicable)
- Product information (name and strength)
- Results for the specific batch, with name of test, acceptance criteria, and result for each test
- Conformance statement or equivalent
- Reference to procedure and specification document
- Reference of data source
- Approval and date
- Expiration date or retest information

Standard Operating Procedures

The purpose of an SOP is to provide directions to trained personnel regarding a given set of activities. SOPs should be clear and concise. The following sections are typically included in an SOP:

- Purpose and scope
- Instructions and procedure
- Responsibilities and roles
- Materials or equipment, as appropriate
- Definitions or references, as needed
- Review and approval
- Revision history

Protocols and Reports

Many tasks and activities are executed on the basis of a predefined, preapproved protocol. The results of these activities are then documented in a final report with conclusions. Examples of such activities are as follows:

- Equipment qualification
- Analytical method validation or verification
- Manufacturing process validation
- Analytical method or manufacturing technology transfer
- Cleaning validation
- Stability study or testing
- Comparability study

Both the protocol and the report should typically include the following sections:

- Purpose
- Plan or instructions
- Predetermined acceptance criteria
- Deviations or investigations, or a reference to (for report only)
- Assessment or evaluation (for report only)
- Data reference (for report only)
- Review and approval
- Revision history

Analytical Procedures

Analytical procedures provide direction to an operator on how to perform a given analytical test. The following sections will typically be included in the analytical procedure:

- Purpose
  - — Test information
  - — Product information
- Safety information, if applicable
- Materials and equipment
- Procedure, as applicable
  - — System suitability
  - — Preparation of solutions and reagents
  - — Preparation of standards and samples
  - — Instrument parameters
  - — Calculations and reporting
- Review and approval with approval dates
- Revision history

Training Documentation

Personnel should be trained to perform their assigned tasks. The training should be documented, and the training records should be retained and kept readily accessible. In general, training documentation should include:

- Training description including name of training, version, and mode (self-training or instructor led)
- Completion date
- Information on the trainer, as applicable

Retention of Documents

An adequate policy for record retention and archiving should be established for the above records. The required length of time depends on the regulatory requirements or company procedures; however, it should be at least 1 year after the batch expiration date.

⟨1030⟩ BIOLOGICAL ASSAY CHAPTERS—OVERVIEW AND GLOSSARY

USP–NF contains four general chapters regarding the development, validation, and analysis of bioassays (biological assays): *Design and Analysis of Biological Assays* ⟨111⟩, *Design and Development of Biological Assays* ⟨1032⟩, *Biological Assay Validation* ⟨1033⟩, and *Analysis of Biological Assays* ⟨1034⟩. This proposed new chapter, *Biological Assay Chapters—Overview and Glossary* ⟨1030⟩, provides an overview and some material common to chapters ⟨1032⟩, ⟨1033⟩, and ⟨1034⟩, including a glossary of bioassay-related terms.

The suite of *USP* bioassay chapters focuses on relative potency assays. These assays recognize the inherent variability in biological test systems (whether animals or cells) that may be seen from laboratory to laboratory and from day to day. That inherent variability compromises the reliability of an absolute measure of potency. In relative potency assays, the biological activity of a Test material is compared to the activity of a Standard in an assay system wherein the use of a Standard reduces the influence of the inherent variability of the system on the estimation of relative potency. Relative potency assays also provide focus on important variability in response because of differences between the Test and Standard materials (if such a difference exists). The Test is expected to behave as a dilution or concentration of the Standard and should exhibit the property of *similarity*. Although they are intended for relative potency bioassays, the principles and practices developed in these chapters may have wider application—for example, to immunoassays and receptor-ligand–binding assays used to determine relative potency.

Chapter ⟨1032⟩ provides information for scientists developing a new biological assay. As seen in *Table 1*, the chapter covers a range of activities across the life cycle of the assay, with emphasis on development leading to validation, including the choice of test system and design considerations (e.g., plate layout). It also addresses data analysis strategies that should be considered during development (before validation) but that are not routinely addressed later. Among these strategies are the choice of weighting scheme, data transformation, if any, and choice of statistical model. Statistical details in support of these sections of chapter ⟨1032⟩ are found in chapter ⟨1034⟩.

Table 1. Primary Sections of *Design and Development of Biological Assays* ⟨1032⟩

Section	Section Title
1	Introduction
1.1	Purpose and Scope
1.2	Audience
2	Bioassay Fitness for Use
2.1	Process Development
2.2	Process Characterization
2.3	Product Release
2.4	Process Intermediates
2.5	Stability
2.6	Qualification of Reagents
2.7	Product Integrity
3	Bioassay Fundamentals
3.1	In Vivo Bioassays
3.2	Ex Vivo Bioassays
3.3	In Vitro (Cell-Based) Bioassays
3.4	Standard

Table 1. Primary Sections of *Design and Development of Biological Assays* ⟨1032⟩ *(Continued)*

Section	Section Title
4	Statistical Aspects of Bioassay Fundamentals
4.1	Data
4.2	Assumptions
4.3	Variance Heterogeneity, Weighting, and Transformation
4.4	Normality
4.5	Linearity of Concentration–Response Data
4.6	Common Bioassay Models
4.7	Suitability Testing
4.8	Outliers
4.9	Fixed and Random Effects in Models of Bioassay Response
5	Stages in the Bioassay Development Process
5.1	Design: Assay Layout, Blocking, and Randomization
5.2	Development
5.3	Data Analysis during Assay Development
5.4	Bioassay Validation
5.5	Bioassay Maintenance

Chapter ⟨1034⟩ provides information about the data analyses appropriate for common relative potency bioassays, including parallel-line, slope-ratio, parallel-curve, and quantal models. The chapter also includes analyses supporting system and sample suitability assessment and methods for combining results from independent assays (see *Table 2*). This chapter is the most statistically advanced of the three chapters but is designed to be suitable for both biologists and statisticians. The conceptual material requires only a minimal statistical background. Methods sections require a statistical background at the level of *Analytical Data—Interpretation and Treatment* ⟨1010⟩ and familiarity with linear regression.

Table 2. Primary Sections of *Analysis of Biological Assays* ⟨1034⟩

Section	Section Title
1	Introduction
2	Overview of Analysis of Bioassay Data
3	Analysis Models
3.1	Quantitative and Qualitative Assay Responses
3.2	Overview of Models for Quantitative Responses
3.3	Parallel-Line Models for Quantitative Responses
3.4	Nonlinear Models for Quantitative Responses
3.5	Slope–Ratio Concentration–Response Models
3.6	Dichotomous (Quantal) Assays
4	Confidence Intervals
4.1	Combining Results from Multiple Assays
4.2	Combining Independent Assays (Sample-Based Confidence Interval Methods)
4.3	Model-Based Methods
5	Additional Sources of Information

Chapter ⟨1033⟩ is intended to follow chapters ⟨1032⟩ (assay development) and ⟨1034⟩ (development of data analysis plans). That is, chapter ⟨1033⟩ assumes a fully developed bioassay (including a data analysis plan and at least tentative values for system and sample suitability criteria and the bioassay format) and provides guidance about the validation of that assay. The chapter addresses the validation characteristics relevant to relative potency bioassays and provides more detail regarding the statistical methods used in validation than does *Validation of Compendial Procedures* ⟨1225⟩. Principles and practices developed in chapter ⟨1033⟩, although they are intended for relative potency assays, may have wider application. The chapter emphasizes validation approaches that provide flexibility in adopting new bioassay methods, new biological drug products, or both (see *Table 3*).

Table 3. Primary Sections of *Biological Assay Validation* ⟨1033⟩

Section	Section Title
1	Introduction
2	Fundamentals of Bioassay Validation
2.1	Bioassay Validation Protocol

Table 3. Primary Sections of *Biological Assay Validation* 〈1033〉 *(Continued)*

Section	Section Title
2.2	Documentation of Bioassay Validation Results
2.3	Bioassay Validation Design
2.4	Validation Strategies for Bioassay Performance Characteristics
2.5	Validation Target Acceptance Criteria
2.6	Assay Maintenance
2.7	Statistical Considerations
3	A Bioassay Validation Example
3.1	Intermediate Precision
3.2	Relative Accuracy
3.3	Range
3.4	Use of Validation Results for Bioassay Characterization
3.5	Confirmation of Intermediate Precision and Revalidation
4	Additional Sources of Information
Appendix	Measures of Location and Spread for Lognormally Distributed Variables

GLOSSARY

This glossary pertains to biological assays and provides a compendial perspective that is consistent across *USP–NF*'s suite of bioassay chapters, is complementary to previous authoritative usage, and provides a useful focus on the bioassay context. In many cases the terms cited here have common, though undocumented, usages or are defined in *Validation of Compendial Procedures* 〈1225〉 and in the International Conference on Harmonization (ICH) Guideline Q2(R1), *Validation of Analytical Procedures: Text and Methodology.*[1] (Chapter 〈1225〉 and ICH Q2(R1) agree on definitions.) The *Glossary* is intended to be consistent with these precedent usages, and notes are provided when a difference arises because of the bioassay context. Definitions from 〈1225〉 and ICH Q2(R1) are identified as, for example, "〈1225〉" if taken without modification, or "adapted from 〈1225〉" if taken with minor modification for application to bioassay. Most definitions are accompanied by notes that elaborate on the bioassay context.

The terms are organized alphabetically within five topic sections:

I. General terms related to bioassays
II. Terms related to performing a bioassay
III. Terms related to precision and accuracy
IV. Terms related to validation
V. Terms related to statistical design and analysis

Table 4 shows each term and the *Glossary* section in which it can be found.

Table 4. Terms Listed in the *Glossary*

Term	Section	Term	Section
Accuracy	III	Mixed-effects model	V
Analysis of variance (ANOVA)	V	Modeling, statistical	V
Analytical procedure	I	Nested	V
Assay	I	Out of specification	II
Assay data set	I	Parallelism	V
Bioassay	I	Partially crossed	V
Biological assay	I	Point estimate	V
Blocking	V	Potency	I
Complete block design	V	Precision	III
Confidence interval	V	Pseudoreplication	V
Crossed	V	*P* value	V
Design of experiments (DOE)	V	Quantitation limit	IV
Dilutional linearity	IV	Random effect	V
Direct bioassays	I	Random error	III
Equivalence test	V	Random factor	V

[1] Available at: http://www.ich.org/fileadmin/Public_Web_Site/ICH_Products/Guidelines/Quality/Q2_R1/Step4/Q2_R1__Guideline.pdf. Accessed 29 March 2012.

Table 4. Terms Listed in the *Glossary* (Continued)

Term	Section	Term	Section
Errors, types of	III	Randomization	V
Expected mean square	V	Range	IV
Experimental design	V	Relative bias	III
Experimental unit	V	Relative potency	I
Factor	V	Repeatability	III
Factorial design	V	Replication	V
Fixed effect	V	Reportable value	I
Fixed factor	V	Reproducibility	III
Format variability	III	Robustness	IV
Format, bioassay	II	Run	I
Fractional factorial design	V	Sample suitability	II
Full factorial design	V	Significance probability	V
General linear model	V	Similar preparations	I
Geometric coefficient of variation	III	Similarity (algebraic)	I
Geometric standard deviation	III	Specificity	III
Incomplete block design	V	Standard error of estimate	V
Independence	V	Statistical process control (SPC)	V
Indirect bioassays	V	System suitability	II
Interaction	V	Systematic error	III
Intermediate precision	III	True replicates	V
Level	V	Truncation bias	III
Linearity, dilutional	IV	Type I error	V
Lognormal distribution	V	Type II error	V
Lower limit of quantitation	IV	Validation, assay	IV
Mean square	V	Variance component analysis	V

I. General Terms Related to Bioassays

Analytical procedure [adapted from Q2(R1)]: Detailed description of the steps necessary to perform the analysis.

NOTES—1. The procedure may include but is not limited to the sample preparation, the Reference Standard, and the reagents; use of equipment; generation of the standard curve; use of the formulae for the calculation; etc. 2. An FDA Guidance[2] provides a list of information that typically should be included in the description of an analytical procedure.

Assay: Analytical procedure to determine the quantity of one or more components or the presence or absence of one or more components.

NOTES—1. *Assay* often is used as a verb synonymous with *test* or *evaluate*, as in "I will assay the material for impurities." In this glossary, *assay* is a noun and is synonymous with *analytical procedure* (q.v.). 2. The phrase *to run the assay* means to perform the analytical procedure as specified. 3. In common practice, *assay* and *run* (q.v.) often are used interchangeably. In this glossary, they are different. Also see *bioassay* and *bioassay data set*.

Assay data set: The set of data used to determine a single potency or relative potency for all samples included in the bioassay.

NOTES—1. The definition of an assay data set can be subject to interpretation as necessarily a minimal set. It may be possible to determine a potency or relative potency from a set of data but not do this well. It is not the intent of this definition to mean that an assay data set is the minimal set of data that can be used to determine a relative potency. In practice, an assay data set should include, at least, sufficient data to assess similarity (q.v.). It also may include sufficient data to assess other assumptions. 2. It is also not an implication of this definition that assay data sets used together in determining a reportable value (q.v.) are necessarily independent from one another, although it may be desirable that they be so. When a run (q.v.) consists of multiple assay data sets, independence of assay sets within the run must be evaluated.

[2] FDA. Guidance for Industry. Analytical Procedures and Methods Validation: Chemistry, Manufacturing, and Controls Documentation. 2000. Available at: http://www.fda.gov/downloads/Drugs/GuidanceComplianceRegulatoryInformation/Guidances/UCM070489.pdf. Accessed 27 December 2011.

Bioassay, biological assay (these terms are interchangeable): Analysis (as of a drug) to quantify the biological activity or activities of one or more components by determining its capacity for producing an expected biological activity on a culture of living cells (in vitro) or on test organisms (in vivo), expressed in terms of units.

NOTES—1. The components of a bioassay include the analytical procedure, the statistical design for collecting data, and the method of statistical analysis that eventually yields the estimated potency or relative potency. 2. Bioassays can be either direct or indirect.

Direct bioassays—Bioassays that measure the concentration of a substance that is required in order to elicit a specific response. For example, the potency of digitalis can be directly estimated from the concentration required to stop a cat's heart. In a direct assay, the response must be distinct and unambiguous. The substance must be administered in such a manner that the exact amount (threshold concentration) needed to elicit a response can be readily measured and recorded.

Indirect bioassays—Bioassays that compare the magnitude of responses for nominally equal concentrations of reference and test preparations rather than test and reference concentrations that are required to achieve a specified response.

Most biological assays in *USP–NF* are indirect assays that are based on either quantitative or quantal (yes/no) responses.

Potency [21 CFR 600.3(s)]: The specific ability or capacity of the product, as indicated by appropriate laboratory tests or by adequately controlled clinical data obtained through the administration of the product in the manner intended, to effect a given result.

NOTES—1. A wholly impotent sample has no capacity to produce the expected specific response, as a potent sample would. Equipotent samples produce equal responses at equal dosages. Potency typically is measured relative to a Reference Standard or preparation that has been assigned a single unique value (e.g., 100.0) for the assay; see *relative potency*. At times, additional qualifiers are used to indicate the physical standard employed (e.g., "international units"). 2. Some biological products have multiple uses and multiple assays. For such products there may be different reference lots that do not have consistently ordered responses across a collection of different relevant assays. 3. [21 CFR 610.10] Tests for potency shall consist of either in vitro or in vivo tests, or both, which have been specifically designed for each product so as to indicate its potency in a manner adequate to satisfy the interpretation of potency given by the definition in 21 CFR 600.3(s).

Relative potency: A measure obtained from the comparison of a Test to a Standard on the basis of capacity to produce the expected potency.

NOTES—1. A frequently invoked perspective is that relative potency is the degree to which the Test preparation is diluted or concentrated relative to the Standard. 2. Relative potency is unitless and is given definition, for any test material, solely in relation to the reference material and the assay.

Reportable value: The value that will be compared to an acceptance criterion.

NOTES—1. The acceptance criterion for comparison may be in the *USP* monograph, or it may be set by the company, e.g., for product release. 2. The term *reportable value* is inextricably linked to the "intended use" of an analytical procedure. Assays are performed on samples in order to yield results that can be used to evaluate some parameter. Assays may have different summary values or formats for different purposes (e.g., lot release vs. calibration of a new reference standard). The reportable value may be different even if the mechanics of the test itself are identical. Validation is required in order to support the properties of each choice of reportable value. In practice there may be one physical document that is the analytical procedure used for more than one application, but each application must be detailed separately within that document. Alternatively, there may be separate documents for each application. 3. When the inherent variability of a biological response, or that of the log potency, precludes a single assay data set's attaining a value sufficiently accurate and precise to meet a specification, the assay format may be changed as necessary. The number of blocks or complete replicates needed depends on the assay's inherent accuracy and precision and on the intended use of the reported value. It is practical to improve the precision of a reported value by reporting the geometric mean potency from multiple assays. The number of assays used is determined by the relationship between the precision required for the intended use and the inherent precision of the assay system.

Run: The performance of the analytical procedure that can be expected to have consistent precision and trueness; usually, the assay work that can be accomplished by a single analyst in a set time with a given unique set of assay factors (e.g., standard preparations).

NOTES—1. There is no necessary relationship of run to assay data set (q.v.). The term *run* is laboratory specific and relates to the laboratory's physical capability and environment for performing the work of an assay. An example of a run is given by one analyst's simultaneous assay of several samples in one day's bench work. During the course of a single run, it may be possible to determine multiple reportable values. Conversely, a single assay data set may include data from multiple runs. 2. From a statistical viewpoint, a run is one realization of the factors associated with intermediate precision (q.v.). Within-run variability is thus repeatability. It is good practice to associate runs with factors that are significant sources of variation in the assay. For example, if cell passage number is an important source of variation in the assay response obtained, then each change in cell passage number initiates a new run. If the variance associated with all factors that could be assigned to runs is negligible, then the influence of runs can be ignored in the analysis, and the analysis can focus on combining independent analysis data sets. 3. When a run contains multiple assays, caution is required regarding the independence of the assay results. Factors that typically are associated with runs and that cause lack of independence include cell preparations, groups of animals, analyst, day, a common preparation of reference material, and analysis with other data from the same run. Even though a strict sense of independence may be violated because some elements are shared among the assay sets within a run, the degree to which inde-

pendence is compromised may have negligible influence on the reportable values obtained and should be verified and monitored.

Similar preparations: The property that the Test and the Standard contain the same effective constituent, or the same effective constituents in fixed proportions, and all other constituents are without effect in some specific assay context.

NOTES—1. Having similar preparations is often summarized as the property that the Test behaves as a dilution (or concentration) of the Standard. 2. Similar preparations are fundamental to methods for determination of relative potency. Given similar preparations, a relative potency can be calculated, reported, and interpreted. In the absence of similar preparations, a meaningful relative potency cannot be reported or interpreted. 3. The practical consequence of similar preparations is algebraic similarity (q.v.). (Also see *Parallelism, section V.*)

Similarity (algebraic): The Test and Standard concentration-response curves are algebraically related in a manner consistent with similar preparations.

NOTES—1. Examples of similarity are parallelism (q.v.) of concentration–response curves and equality of intercepts in slope ratio models. 2. Failure to statistically demonstrate dissimilarity between a Reference and a Test does not amount to demonstration of similarity. To demonstrate similarity an equivalence approach is appropriate; see ⟨1032⟩ and ⟨1034⟩. 3. Similarity is typically a sample suitability (q.v.) criterion. Note, however, that suitability is a necessary but not sufficient condition for preparations to be similar. In practice, absent knowledge of differences between the Test and Standard materials, demonstration of similarity is accepted as demonstrating similar preparations.

II. Terms Related to Performing a Bioassay

Format, bioassay: The intra- and inter-run replication strategy for replication of assay data sets that has been determined by variance analysis to support the use of the bioassay.

NOTES—1. Modifications to bioassay format may occur as new information regarding sources of variability becomes available. Such modifications do not include changes to the dilution scheme of Test samples or Standard, or the replication strategy (part of what is sometimes called bioassay configuration). Assay configuration can include nested dimensions like plate design, multiple plates per day, single plates on multiple days, etc. 2. The geometric mean relative potency determined from the bioassay format is the reportable value, which may be used to assess conformance to specifications or as a component of subsequent analysis (e.g., stability evaluation).

Out of specification (OOS): The property of a reportable value that falls outside its specification acceptance criterion.

NOTE—*Out of specification* is not a property of the bioassay but rather a property of Test samples. The term is introduced into ⟨1033⟩ in conjunction with setting validation acceptance criteria which limit the risk of producing out-of-specification test results because of bioassay performance characteristics.

Sample suitability: A sample is suitable (may be used in the estimation of potency) if its response curve satisfies limits on critical properties that are stated in the assay procedure.

NOTE—Response curve properties are to be taken generally; i.e., includes outliers and variability. The most significant of these properties for bioassays is similarity (q.v.) to the standard response curve. In addition, all assay systems have limits on the range of values they can report. For samples that fail one or more sample suitability criteria in a bioassay, the potency estimate from those samples should not be used as a reportable value or as a contributor to a reportable value. Also see *truncation bias* in this *Glossary* and the sections *Sample Suitability* and *Range* in general chapter ⟨1032⟩.

System suitability: An assay system is suitable for its intended purpose if it is capable of providing legitimate measurements as defined in the assay protocol.

NOTE—System suitability may be thought of as an assessment of whether there is any evidence of a problem in the assay system. An example is provided by positive and negative controls, where values outside their normal ranges suggest that the assay system is not working properly.

III. Terms Related to Precision and Accuracy

Accuracy ⟨1225⟩: The closeness of test results obtained by the procedure and the true value.

NOTES—1. ICH and USP give the same definition of accuracy. However, ISO specifically regards accuracy as having two components, bias and precision.[3] That is, to be *accurate* as used by ISO, a measurement must both be on target (have low bias) and be precise. In contrast, ICH Q2(R1) states that accuracy is sometimes termed "trueness" but does not define *trueness*. ISO defines *trueness* as the "closeness of agreement between the average value obtained from a large series of test results and an accepted reference value" and indicates that "trueness is usually expressed in terms of bias." The 2001 FDA Guidance on Bioanalytical Method Validation[4] defines *accuracy* in terms of "closeness of *mean* test results obtained by the method to the true value (concentration) of the analyte" (emphasis added) and thus is consistent with the ICH usage. This glossary adopts the USP/ICH approach. That is, *accuracy* is defined as the agreement between the mean (or expected results) from an assay and

---

[3] ISO. International Standard 5725-1. Accuracy (Trueness and Precision) of Measurement Methods and Results—Part 1: General Principles and Definitions. Geneva, Switzerland; 1994.

[4] FDA. Guidance for Industry. Bioanalytical Method Validation. May 2001. http://www.fda.gov/downloads/Drugs/GuidanceComplianceRegulatoryInformation/Guidances/UCM070107.pdf. Accessed 7 December 2011.

the true value, and uses the phrase *accurate and precise* to indicate low bias (accurate) and low variability (precise). 2. Considerable caution is needed when using or reading the term *accuracy*. In addition to the inconsistency between USP/ICH and ISO, common usage is not consistent. 3. For purposes of bioassay validation, the terms *accuracy* and *bias* have been replaced by *relative accuracy* and *relative bias*.

Error, types of: Two sources of errors that affect the uncertainty of results of a biological assay are systematic error and random error.

A **systematic error** is one that happens with similar magnitude and consistent direction repeatedly. This introduces a bias in the determination. Effective experimental design, including randomization and/or blocking, can reduce systematic error.

A **random error** is one whose magnitude and direction vary without pattern. Random error is an inherent variability or uncertainty of the determination. Conversion of systematic into random error, through experimental design or randomization, increases the robustness of a biological assay and allows a comparatively simple analysis of assay data but may require a larger sample size.

Format variability: Predicted variability for a particular bioassay format.

Geometric coefficient of variation: Found as antilog(S)–1, where S is the standard deviation determined in the log scale.

NOTE—The geometric coefficient of variation is usually reported as a percentage (%GCV). It is important not to confuse the %GCV with the %CV. The %GCV is a measure of spread relevant to data analyzed in the log-transformed [$Y = \log(X)$] scale, and the %CV is a measure relevant to data analyzed in the original (X) scale.

Geometric standard deviation (GSD): The variability of the log-transformed values of a lognormal response expressed as a percentage in the untransformed scale. It is found as antilog(S), where S is the standard deviation determined in the log scale.

NOTE—For example, if the standard deviation of log potency is S using log base 2, the GSD of potency is $100 * 2^S$.

Intermediate precision (adapted from ⟨1225⟩): Within-laboratory precision associated with changes in operating conditions.

NOTES—1. Factors contributing to intermediate precision involve anything that can change within a given laboratory and that may affect the assay, including different days, different analysts, different equipment, etc. Intermediate precision is thus "intermediate" in scope between the extremes of repeatability (intra-assay) and reproducibility (inter-laboratory). 2. Any statement of intermediate precision should identify the factors that varied. For example, "The intermediate precision associated with changing equipment and operators is…." 3. Investigators can benefit from separately identifying the precision associated with each source (e.g., inter-analyst precision). This may be part of assay development and validation when there is value in identifying the important contributors to intermediate precision. 4. When reporting intermediate precision, particularly for individual sources, care should be taken to distinguish between intermediate precision variance and components of that variance. The intermediate precision *variance* includes repeatability and thus must be at least as large as the repeatability variance. A variance *component*, e.g., associated with analyst, also is a part of the intermediate precision variance for analyst, but it could be negligible and need not be larger in magnitude than the repeatability variance.

Precision (⟨1225⟩): Measure of agreement among individual test results when the procedure is applied repeatedly to multiple samplings of a homogeneous sample.

NOTES—1. Precision may be considered at three levels: repeatability (q.v.), intermediate precision (q.v.), and reproducibility (q.v.). 2. Precision should be investigated using homogeneous, authentic samples. However, if it is not possible to obtain a homogeneous sample, precision can be investigated using spiked samples that mimic a true sample or a sample solution. 3. Precision may be expressed as the variance, standard deviation, coefficient of variation, or geometric coefficient of variation (q.v.).

Relative bias: Measure of difference between the expected (or mean) value and the true value, expressed as a percentage of the true value.

Repeatability (⟨1225⟩): The precision within a laboratory over a short interval of time, using the same analyst with the same equipment.

NOTES—1. ICH Q2(R1) says that repeatability is also termed "intra-assay" precision. In the bioassay context, the better term is *intra-run*, and a "short interval of time" connotes *within-run*. 2. The idea of a "short interval of time" can be problematic with bioassays. If a run requires multiple weeks and consists of a single assay set, then intra-run precision cannot be determined. Alternatively, if a run consists of two assay data sets and a run can be done in a single day, repeatability of the relative potency determination can be assessed.

Reproducibility ⟨1225⟩**:** The precision between laboratories.

NOTES—1. Reproducibility includes contributions from repeatability and all factors that contribute to intermediate precision, as well as any additional contributions from inter-laboratory differences. 2. Reproducibility applies to collaborative studies such as those for standardization or portability of methodology. Depending on the design of the collaborative study, it may be possible to separately describe variance components associated with intra- and inter-laboratory sources of variability.

Specificity ⟨1225⟩**:** The ability to assess unequivocally the analyte in the presence of components that may be expected to be present.

NOTES—1. Typically these components may include impurities, degradants, matrix, etc. See chapter ⟨1225⟩ for further discussion. 2. This definition is also associated with selectivity in other guidances for analytical methods. 3. Specificity can mean the measurement of the specific analyte of interest and no other similar analyte.

Truncation bias: Bias that occurs when some portion of the distribution of responses is not observed or recorded.

NOTES—1. When there is truncation bias, the distribution of recorded observations does not match the true distribution of responses. 2. Truncation bias may occur in a bioassay that does not report estimates of log potency outside a set potency range. For example, a sample with a true potency at an edge of this range is expected to fail to yield (report) a potency estimate in approximately half of the assays in which it appears. In this example, the mean of the observed potencies will be biased toward log potency 0.

IV. Terms Related to Validation

Dilutional linearity (adapted from ⟨1225⟩): The ability (within a given range) of a bioassay to obtain measured relative potencies that are directly proportional to the true relative potency of the samples.

NOTES— 1. To determine dilutional linearity, sometimes called bioassay analytical linearity, across a range of known relative potency values, analysts examine the relationship between known log potency and mean observed log potency. If that relationship yields an essentially straight line with a *y*-intercept of 0 and a slope of 1, the assay has direct proportionality. If that plot yields an essentially straight line but either the *y*-intercept is not 0 or the slope is not 1, the assay has a proportional linear response. 2. To assess whether the slope is (near) 1.0 requires an a priori equivalence or indifference interval. It is not proper statistical practice to test the null hypothesis that the slope is 1.0 against the alternative that it is not 1.0 and then to conclude a slope of 1.0 if this is not rejected. Bioassay analytical linearity is separate from consideration of the shape of the concentration–response curve. Linearity of concentration–response is not a requirement of bioassay analytical linearity since bioassay analytical linearity is possible regardless of the form of the concentration–response curve. 3. Dilutional linearity is further addressed in ⟨1033⟩.

Quantitation limit (lower limit of quantitation; adapted from ⟨1225⟩): The lowest known relative potency for which the assay has suitable precision and accuracy.

NOTES—1. This applies to assay results (log potency) rather than the reportable value. 2. The quantitation limit is not commonly determined for relative potency bioassays. Animal assays with serologic endpoints are examples of the use of this term.

Range (adapted from ⟨1225⟩): The interval between the upper and lower known relative potencies (and including those relative potencies) for which the bioassay is demonstrated to have a suitable level of precision, accuracy, and bioassay analytical linearity.

NOTE—This applies to reportable values (typically a geometric mean) rather than the individual assay results.

Robustness (⟨1225⟩): A measure of an analytical procedure's capacity to remain unaffected by small but deliberate variations in method parameters listed in the procedure documentation.

NOTES—1. Robustness is an indication of a bioassay's reliability during normal usage. For example, a cell culture assay system that is robust to the passage number of the cells can provide potency values with acceptable accuracy and precision across a consistent range of passage numbers. 2. ICH Q2(R1) states:

> The evaluation of robustness should be considered during the development phase and depends on the type of procedure under study. It should show the reliability of an analysis with respect to deliberate variations in method parameters. If measurements are susceptible to variations in analytical conditions, the conditions should be suitably controlled or a precautionary statement should be included in the procedure. One consequence of the evaluation of robustness should be that a series of system suitability [q.v.] parameters (e.g., resolution test) is established to ensure that the validity of the analytical procedure is maintained whenever used.[1]

Validation, assay: Assay validation is the process of demonstrating and documenting that the performance characteristics of the procedure and its underlying method meet the requirements for the intended application and that the assay is thereby suitable for its intended use.

NOTES—Formal validations are conducted prospectively according to a written plan that includes justifiable acceptance criteria on validation parameters. See ⟨1033⟩.

V. Terms Related to Statistical Design and Analysis

Analysis of variance (ANOVA): A statistical tool used to assess contributions to variability from experimental factors.

Blocking: The grouping of related experimental units in experimental designs.

NOTES—1. Blocking often is used to reduce the contribution to variability associated with a factor not of primary interest. 2. Blocks may consist, for example, of groups of animals (a cage, a litter, or a shipment), individual 96-well plates, sections of 96-well plates, or whole 96-well plates grouped by analyst, day, or batches of cells. 3. The goal is to isolate, by statistical design and analysis, a systemic effect, such as cage, so that it does not obscure the comparisons of interest.

A **complete block design** occurs when all levels of a treatment factor (in a bioassay, the primary treatment factors are sample and concentration) can be applied to experimental units for that factor within a single block. Note that the two treatment factors *sample* and *concentration* may have different experimental units. For example, if the animals within a cage are all assigned the same concentration but are assigned unique samples, then the experimental unit for concentration is cage and the experimental unit for sample is animal, and cage is a blocking factor for sample.

An **incomplete block design** occurs when the number of levels of a treatment factor exceeds the number of experimental units for that factor within the block.

Confidence interval: A random interval produced by a statistical method that contains the true (fixed, but unknown) parameter value with a stated confidence level on repeated application of the statistical method.

NOTE—See chapter ⟨1010⟩ for more information.

Crossed (and partially crossed): Two factors are crossed (or fully crossed) if each level of each factor appears with each level of the other factor. Two factors are partially crossed when they are not fully crossed but multiple levels of one factor appear with a common level of the other factor.

NOTES—1. For example, in a bioassay in which all samples appear at all dilutions, samples and dilutions are (fully) crossed. In a bioassay validation experiment in which two of four analysts each perform assays on the same set of samples on each of six days and a different pair of analysts is used on each day, the analysts are partially crossed with days. 2. Each factor may be applied to different experimental units, and the factors may be both fully crossed and nested (q.v.), creating a split-unit or split-plot design (q.v.). 3. Experiments with factors that are partially crossed require particular care for proper analysis. 4. A randomized complete block design (q.v.) is a design in which the block factor (which often is treated as a random effect) is crossed with the treatment factor (which usually is treated as a fixed effect).

Design of experiments (DOE) [ICH Q8(R2)][5]: A structured, organized method for determining the relationship between factors that affect a process and the output of that process.

NOTE—DOE is used in bioassay development and validation; see ⟨1032⟩ and ⟨1033⟩.

Equivalence test: A test to demonstrate equivalence (e.g., similarity or conformance to validation acceptance criteria) of two quantities by conformance to an interval acceptance criterion.

NOTES—1. An equivalence test differs from most common statistical tests in the nature of the statistical hypotheses. Most common statistical tests are difference tests—that is, the statistical null hypothesis is that of no difference, and the alternative is that there is some difference, without regard to the magnitude or importance of the difference. The difference may be between a characteristic of two populations or between a characteristic of a single population and an accepted value. In equivalence testing the null hypothesis is that the difference is not sufficiently small, and the alternative hypothesis is that the difference is sufficiently small that there is no important difference. In a common statistical difference test one concludes that there is insufficient evidence to establish nonconformance to an acceptance criterion. This may be the result of excess variability and/or an inadequate design. In an equivalence test the conclusion is that the data conform to the acceptance criterion (e.g., slopes are parallel). 2. A common statistical procedure used for equivalence tests is the two one-sided tests (TOST) procedure. 3. The interval acceptance criterion may be one- or two-sided. An example of a one-sided interval is a validation acceptance criterion for a %GCV of not more than XX%

Expected mean square: A mathematical expression of variances estimated by an ANOVA mean square.

Experimental design: The structure of assigning treatments to experimental units.

NOTES—1. Some aspects of experimental design are blocking (q.v.), randomization (q.v.), replication (q.v.), and specific choice of design (cf. ⟨1032⟩). 2. Important components of experimental design include the number of samples, the number of concentrations, and how samples and concentrations are assigned to experimental units and are grouped into blocks. 3. The experimental design influences which statistical methodology should be used to achieve the analytical objective.

Experimental unit: The smallest unit to which a distinct level of a treatment is randomly allocated.

NOTES—1. Randomization of treatment factors to experimental units is essential in bioassays. 2. Different treatment factors can be applied to different experimental units. For example, samples may be assigned to rows on a 96-well plate, and dilutions may be assigned to columns on the plate. In this case, rows are the experimental units for samples, columns are the experimental units for concentrations, and wells are the experimental units for the interaction of sample and concentration. 3. An experimental unit must be distinguished from a sampling unit, the smallest unit on which a distinct measurement is recorded (e.g., a well). Because the sampling unit is often smaller than the experimental unit, it is an easy mistake to treat sampling units as if they are experimental units. This mistake is called pseudoreplication (q.v.).

Factor: An assay parameter or operational element that may affect assay response and that varies either within or across assay runs.

NOTE—In a bioassay there are at least two treatment factors: sample and concentration.

A **fixed factor (fixed effect)** is a factor that is controllable and deliberately set at specific levels in a bioassay. Inference is made to the levels used in the experiment or intermediate values. Sample and concentration are examples of fixed factors in bioassays.

A **random factor (random effect)** is one which is generally not controllable and for which its levels represent a sample of ways in which that factor might vary. In a bioassay, the test organisms, plate, and day are often considered random factors. Whether a factor is treated as random or fixed may depend on the experiment and questions asked.

Factorial design: An experimental design in which there are multiple factors and the factors are partially or fully crossed.

In a **full factorial design**, each level of a factor appears with all combinations of levels of all other factors. For example, if factors are reagent batch and incubation time, for a full factorial design all combinations of incubation time and reagent batch must be included.

A **fractional factorial design** is a reduced design in which each level of a factor appears with only a subset of combinations of levels of all other factors and some factor effects (main effects and/or interactions) are deliberately confounded

[5] ICH. Guidance Q8(R2) Pharmaceutical Development. November 2009. Available at http://www.fda.gov/downloads/Drugs/GuidanceComplianceRegulatoryInformation/Guidances/UCM073507.pdf. Accessed 27 December 2011.

with other combinations of factor effects. Fractional factorial designs should be carefully considered for screening and optimization purposes. This design can be considered without risk of information loss for validation.

General linear model: A statistical linear model that relates study factors, which can be continuous or discrete, to experimental responses.

Independence: For two measurements or observations *A* and *B* (raw data, assay sets, or relative potencies) to be independent, values for *A* must be unaffected by *B*'s responses and vice versa.

NOTE—A consequence of the failure to recognize lack of independence is poor characterization of variance. In practice this means that if two potency or relative potency measurements share a common factor that might influence assay outcome (e.g., analyst, cell preparation, incubator, group of animals, or aliquot of Standard samples), then the correct initial assumption is that these relative potency measurements are not independent. The same concern for lack of independence holds if the two potency or relative potency measurements are estimated together from the same model or are in any way associated without including in the model some term that captures the fact that there are two or more potency measurements. As assay experience is gained, an empirical basis may be established (and monitored) so that it is reasonable to treat potency measurements as independent even if the measurements share a common level of a factor. This is the case when it has been demonstrated that a factor does not have a practically significant effect on long-term bioassay results.

Interaction: Two factors are said to interact if the response to one factor depends on the level of the other factor.

Level: A location on the scale of measurement of a factor.

NOTES—1. Factors have two or more distinct levels. For example, if a bioassay validation experiment employs three values of incubation time and two batches of a key reagent, the levels are the three times for the factor *incubation time* and the two batches for the factor *batch*. 2. Levels of a factor in a bioassay may be quantitative, such as concentration, or categorical, such as sample (i.e., test and reference).

Lognormal distribution: A distribution of values (assay responses or potencies) where the logarithms of the values have a normal distribution.

NOTES—1. Most relative potency bioassay measurements are lognormally distributed. 2. The lognormal is a skewed distribution characterized by increased variability with increased level of response.

Mean square: A calculation in ANOVA representing the variability associated with an experimental factor.

Mixed-effects model: A statistical model that includes both fixed and random effects.

Modeling, statistical: The mathematical specification of the relationship between inputs (*X*s) and outputs (*Y*s) of a process, e.g., the concentration–response relationship in bioassay or the modeling of the effects of important sources of variation on potency measurement.

NOTES—1. Modeling includes methods to capture the dependence of the response on the samples, concentration, experimental units, and groups or blocking factors in the assay configuration. 2. Modeling of bioassay data includes making many choices, some of which are driven by the assay design and data. For continuous data there is a choice between linear and nonlinear models. For discrete data there is a choice among logit/log models within a larger family of generalized linear models. In limiting dilution assays, published literature advocates Poisson models and Markov chain binomial models. One can use either fixed-effects models or mixed-effects models for bioassay data. On the one hand, the fixed-effects models are more widely available in software and are somewhat less demanding for statisticians to set up. On the other hand, mixed models have advantages over fixed ones: they are more accommodating of missing data and, more importantly, can allow each block to have different slopes, asymptotes, median effective concentrations required to induce a 50% effect (EC_{50}), or relative potencies. Particularly when the analyst is using straight-line models fitted to nonlinear responses or assay systems in which the concentration–response curve varies from block to block, the mixed model captures the behavior of the assay system in a much more realistic and interpretable way. 3. It is essential that any modeling approach for bioassay data should use all available data simultaneously to estimate the variation (or, in a mixed model, each of several sources of variation). It may be necessary to transform the observations before this modeling to include a variance model or to fit a means model (in which there is a predicted effect for each combination of sample and concentration) to get pooled estimate(s) of variation.

Nested: A factor *A* is nested within another factor *B* if the levels of *A* are different for every level of *B*.

NOTES—1. For example, in a bioassay validation experiment two analysts may perform assays on five days each. If the calendar days for the first analyst are distinct from those of the second analyst, days are nested within analyst. 2. Nested factors have a hierarchical relationship. 3. For two factors to be nested they must satisfy the following: (a) they are applied to different-sized experimental units; (b) the larger experimental unit contains more than one of the smaller experimental units; and (c) the factor applied to the smaller experimental unit is not fully crossed (q.v.) with the factor applied to the larger experimental unit. When conditions (a) and (b) are satisfied and the factors are partially crossed, then the experiment is partially crossed and partially nested. Experiments with this structure require particular care for proper analysis.

Parallelism (of concentration–response curves): A quality in which the concentration–response curves of the Test sample and the Reference Standard are identical in shape and differ only by a horizontal difference that is a constant function of relative potency.

NOTES—1. When Test and Reference preparations are similar (q.v.) and assay responses are plotted against log concentrations, the resulting curve for the Test preparation will be the same as that for the Standard but will be shifted horizontally by an amount that is the logarithm of the relative potency. Because of this relationship, similarity (q.v.) is often equated with *parallelism* but they are not the same. See section 3.5, *Slope-Ratio Concentration–Response Models*, in chapter ⟨1034⟩, in which similar samples have concentration–response relationships with a common (or nearly common) *y*-intercept but may differ in

their slopes. 2. In practice, it is not possible to demonstrate that the shapes of two curves are identical. Instead, the two curves are shown to be sufficiently algebraically similar (equivalent) in shape. Note that *similar* should be interpreted as "we have evidence that the two curves are close enough in shape" rather than "we do not have evidence that the two curves differ in shape." 3. The assessment of parallelism depends on the type of function used to fit the response curve. Parallelism for a nonlinear assay using a four-parameter logistic fit means that (a) the slopes of the rapidly changing parts of the Test and Reference Standard curves (that is, slope at a tangent to the curve where the first derivative is at a maximum) should be similar; and (b) the upper and lower asymptotes of the response curves (plateaus) should be similar. For straight-line analysis, the slopes of the lines should be similar.

Point estimate: A single-value estimate obtained from statistical calculations.

NOTES—1. Examples are the average relative bias, the %GCV, and relative potency. 2. The point estimate may be augmented with an *interval estimate* (confidence interval; q.v.) that employs an interval to express the uncertainty in the determination of the point estimate.

Pseudoreplication: The misidentification of samples from experimental units as independent and thus true replicates when they actually are not independent.

NOTES—1. Pseudoreplication results in incorrect inferences because of the incorrect assignment of variability and the appearance of more replicates than are actually present. 2. Lack of recognition of pseudoreplication is critical because it is an easy mistake to make, and the consequences can be serious. For example, pseudoreplicates commonly arise when analysts make a dilution series for each sample in tubes (the dilution series can be made with serial dilutions, single-point dilutions, or any convenient dilution scheme). The analyst then transfers each dilution of each sample to several wells on one or more assay plates. The wells are then pseudoreplicates because they are simply aliquots of a single dilution process and thus are not representative of independent preparations. 3. A simple way to analyze data from pseudoreplicates is to average over the pseudoreplicates (if a transformation of the observed data is used, the transformation should be applied before averaging over pseudoreplicates) before fitting any concentration–response model. In many assay systems, averaging over pseudoreplicates leaves the assay without any replication. A more complex way to use data containing pseudoreplicates is to use a mixed model that treats the pseudoreplicates as a separate random effect. Although pseudoreplication normally is of little value, it can be advantageous when two conditions are satisfied: (a) the pseudoreplicate (e.g., well-to-well) variation is very large compared to the variation associated with replicates; and (b) the cost of pseudoreplicates is much lower than the cost of replicate experimental units.

***P* value (significance probability):** The probability of observing, in repeated trials, that an experimental outcome is as different or more different than that observed if the null hypothesis is true.

NOTES—1. *More different* means further from the null hypothesis. 2. Commonly, $P < 0.05$ is taken as a threshold for indicating statistically significant differences, although any value for the threshold may be used. Bases for choosing the threshold are the risks (costs) of making a wrong decision; see *type I error* and *type II error.*

Randomization: A process of assignment of treatment to experimental units based on chance so that all equal-sized subgroups of units have an equal chance of receiving a given treatment.

NOTES—1. The chance mechanism may be an unbiased physical process (rolling unbiased dice, flipping coins, drawing from a well-mixed urn), random-number tables, or computer-generated randomized numbers. Care must be taken in the choice and use of method. Good practice is to use a validated computerized random-number generator. 2. The use of randomization can help to prevent systematic error from becoming associated with particular samples or a dilution pattern and causing bias. For example, in 96-well bioassays, plate effects can be substantial and can cause bias in observed responses or summary measures. In animal studies, a variety of factors associated with individual animals can influence responses. If extraneous factors that influence either plate assays or animal assays are not routinely demonstrated to have been eliminated or minimized so as to be negligible, randomization is essential to obtaining unbiased data required for the calculation of true potency. 3. Randomization is a good practice even when there is evidence that operational factors (e.g., location, time, reagent lot) have little or no effect on the assay system. While randomization may not protect an individual assay (or perhaps a block of an assay) from a (perhaps newly) important operational factor, randomization provides assurance that results from a collection of assays are not biased due to operational factors.

Replication: A process in which multiple independent experimental units receive the same level of a treatment factor.

NOTES—1. The purpose of replication is to minimize the effects of uncontrollable sources of random variability. 2. Replication can occur either completely at random or across blocks. Generally, replication within blocks is pseudoreplication (q.v.). 3. Replication of factors that contribute most greatly to variability, or factors that are at the highest levels in a nested layout, usually result in the most effective reduction of random variability.

True replicates: Samples based on independent experimental units.

Standard error of estimate: A measure of uncertainty of an estimate of a reportable value or other parameter estimate because of sampling variation.

NOTES—1. In bioassay the focus is on the precision (standard error) of the relative potency. 2. Standard errors can be made smaller with additional replication. 3. Technically, the standard error of an estimate is the standard deviation of the sampling distribution of the estimate. The term *standard error* is used to distinguish between this usage of standard deviation (that depends on sample size) and the common laboratory usage in which standard deviation (or coefficient of variation) is used to characterize the precision of individual measurements obtained from a procedure. This latter precision does not depend on sample size.

Statistical process control: A set of statistical methods used to monitor shifts and trends in a process.
Type I error: The error in statistical hypothesis testing that the alternative hypothesis is accepted when it is false.
NOTE—The probability of a type I error usually is denoted by α.
Type II error: The error in statistical hypothesis testing that the alternative hypothesis is rejected when it is true.
NOTE—The probability of a type II error usually is denoted by β.
Variance component analysis: A statistical analysis that partitions contributions made to total variability by components associated with influential assay factors, e.g., analyst, day, or instrument.

⟨1031⟩ THE BIOCOMPATIBILITY OF MATERIALS USED IN DRUG CONTAINERS, MEDICAL DEVICES, AND IMPLANTS

This chapter provides guidance on the identification and performance of procedures for evaluating the biocompatibility of drug containers, elastomeric closures, medical devices, and implants. Biocompatibility refers to the tendency of these products to remain biologically inert throughout the duration of their contact with the body. The biocompatibility testing procedures referenced in this chapter are designed to detect the nonspecific, biologically reactive, physical or chemical characteristics of medical products or the materials used in their construction. In combination with chemical assays, these biological procedures can be used to detect and identify the inherent or acquired toxicity of medical products prior to or during their manufacturing and processing.

Preclinical testing procedures to evaluate the safety of the elastomers, plastics, or other polymers used in the construction of medical products are referenced or described in the following general chapters: *Injections and Implanted Drug Products* ⟨1⟩, *Biological Reactivity Tests, In Vitro* ⟨87⟩, *Biological Reactivity Tests, In Vivo* ⟨88⟩, *Transfusion and Infusion Assemblies and Similar Medical Devices* ⟨161⟩, *Elastomeric Closures for Injections* ⟨381⟩, *Plastic Packaging Systems and Their Materials of Construction* ⟨661⟩, *Plastic Materials of Construction* ⟨661.1⟩, and *Plastic Packaging Systems for Pharmaceutical Use* ⟨661.2⟩. Specific in vitro and in vivo testing procedures to evaluate the biocompatibility of medical products in patients are described under *Biological Reactivity Tests, In Vitro* ⟨87⟩ and under *Biological Reactivity Tests, In Vivo* ⟨88⟩.

The procedures used to evaluate the biocompatibility of a medical product or its construction materials have been categorized as a panel of biological effects (toxicity procedures): cytotoxicity, sensitization, irritation or intracutaneous reactivity, acute systemic toxicity, subchronic toxicity (repeated), genotoxicity, implantation, hemocompatibility, chronic toxicity (extending beyond 10% of the life span of the test animal or beyond 90 days), carcinogenicity, reproductive or developmental toxicity, and biodegradation.[1] The USP general chapters referring to the toxicity procedures for these categories are indicated in *Table 1*. In addition, pyrogenicity, an area of special toxicity, is evaluated under *Pyrogen Test* ⟨151⟩ and under *Bacterial Endotoxins Test* ⟨85⟩. There are currently no general chapters that detail subchronic toxicity, genotoxicity, chronic toxicity, carcinogenicity, hemotoxicity, reproductive toxicity, or biodegradation testing[2] requirements.

Table 1. Toxicity Procedures in the USP General Chapters

Biological Effect	USP General Chapter
Cytotoxicity	*Biological Reactivity Tests, In Vitro* ⟨87⟩*
Sensitization	*Sensitization Testing* ⟨1184⟩
Irritation or intracutaneous reactivity	*Biological Reactivity Tests, In Vivo* ⟨88⟩†
Systemic toxicity (acute toxicity)	*Biological Reactivity Tests, In Vivo* ⟨88⟩
Implantation	*Biological Reactivity Tests, In Vivo* ⟨88⟩

* Additional general chapters referring to this biological effect include *Transfusion and Infusion Assemblies and Similar Medical Devices* ⟨161⟩, *Elastomeric Closures for Injections* ⟨381⟩, *Plastic Packaging Systems and Their Materials of Construction* ⟨661⟩, *Plastic Materials of Construction* ⟨661.1⟩, and *Plastic Packaging Systems for Pharmaceutical Use* ⟨661.2⟩.
† Additional general chapters referring to this biological effect include ⟨1⟩, *Transfusion and Infusion Assemblies and Similar Medical Devices* ⟨161⟩, *Elastomeric Closures for Injections* ⟨381⟩, *Plastic Packaging Systems and Their Materials of Construction* ⟨661⟩, *Plastic Materials of Construction* ⟨661.1⟩, and *Plastic Packaging Systems for Pharmaceutical Use* ⟨661.2⟩.

DRUG CONTAINERS

Biocompatibility of Plastic and Other Polymeric Drug Containers

Pharmaceutical containers consist of a container and a closure. Plastic containers may consist of polymers that upon extraction do not alter the stability of the contained product or do not exhibit toxicity. The biocompatibility testing requirements for drug containers are stated under ⟨1⟩, *Plastic Packaging Systems and Their Materials of Construction* ⟨661⟩, *Plastic Materials of Con-*

[1] ISO document 10993-1:1997 (or latest version) entitled *Biological Evaluation of Medical Devices—Part 1: Evaluation and Testing.*
[2] See OECD Guidelines for Testing of Chemicals at www.oecd.org.

struction 〈661.1〉, and *Plastic Packaging Systems for Pharmaceutical Use* 〈661.2〉. As directed in these chapters, the plastic or other polymeric portions of these products are tested according to the procedures set forth under *Biological Reactivity Tests, In Vitro* 〈87〉. A plastic or other polymer that does not meet the requirements of *Biological Reactivity Tests, In Vitro* 〈87〉 is not a suitable material for a drug container. Materials that meet the in vitro requirements qualify as biocompatible materials without the need for further testing and may be used in the construction of a drug container. If a class designation (classes I–VI) for plastics or other polymers is desired, the appropriate testing procedures are performed as discussed in the section *In Vivo Testing and Class Designation.*

Elastomeric Closures

Elastomeric closures are closures that can be pierced by a syringe and maintain their integrity because of their elastic properties. Elastomeric materials may be composed of several chemical entities including fillers, pigments, plasticizers, stabilizers, accelerators, vulcanizing agents, and a natural or a synthetic polymer. These materials are used for manufacturing a product with the desired elastomeric physical properties, and they frequently demonstrate biological reactivity—cellular degeneration and malformation—when tested with in vitro cell cultures.

The biocompatibility of an elastomeric material is evaluated according to the two-stage testing protocol specified in the *Biological Test Procedures* under *Elastomeric Closures for Injections* 〈381〉. Unlike plastics or other polymers, an elastomeric material that does not meet the requirements of the first-stage (in vitro) testing may qualify as a biocompatible material by passing the second-stage (in vivo) testing, which consists of the *Systemic Injection Test* and the *Intracutaneous Test* described under *Biological Reactivity Tests, In Vivo* 〈88〉. No class or type distinction is made between elastomeric materials that meet the requirements of the first stage of testing and those that qualify as biocompatible materials by meeting the second-stage requirements. Elastomeric materials are not assigned class I–VI designation.

MEDICAL DEVICES AND IMPLANTS

Medical devices and implants, labeled nonpyrogenic, in direct or indirect contact with the cardiovascular system or other soft body tissues, meet the requirements described under *Transfusion and Infusion Assemblies and Similar Medical Devices* 〈161〉. The products listed in this chapter that meet the criteria are solution administration sets, extension sets, transfer sets, blood administration sets, intravenous catheters, dialyzers and dialysis tubing and accessories, transfusion and infusion assemblies, and intramuscular drug delivery catheters. The outlined criteria do not apply to medical products such as orthopedic products, latex gloves, and wound dressings.

The testing requirements described or referenced under *Transfusion and Infusion Assemblies and Similar Medical Devices* 〈161〉 include *Sterility, Bacterial endotoxins, Pyrogen,* and *Other requirements.* A procedure to evaluate the presence of bacterial endotoxins is set forth under *Bacterial Endotoxins Test* 〈85〉, and the limits are set in *Bacterial Endotoxins* under *Transfusion and Infusion Assemblies and Similar Medical Devices* 〈161〉. For devices that cannot be tested by the *Bacterial Endotoxins Test* 〈85〉 because of nonremovable inhibition or enhancement, the *Pyrogen Test* 〈151〉 is applied. The procedures for evaluating medical devices purported to contain sterile pathways are set forth in *Sterile Devices* under *Sterility Tests* 〈71〉. A procedure for evaluating the safety of medical devices is set forth in the *Safety Test* under *Biological Reactivity Tests, In Vivo* 〈88〉.

The plastic or other polymer components of medical devices meet the requirements specified for plastics and other polymers under *Plastic Packaging Systems and Their Materials of Construction* 〈661〉, *Plastic Materials of Construction* 〈661.1〉, and *Plastic Packaging Systems for Pharmaceutical Use* 〈661.2〉; those made of elastomers meet the requirements under *Elastomeric Closures for Injections* 〈381〉. As directed in these chapters, the biocompatibility of the plastic, other polymeric, and elastomeric portions of these products are tested according to the procedures described under *Biological Reactivity Tests, In Vitro* 〈87〉. If a class designation for a plastic or other polymer is also required, the appropriate testing procedures described under *Biological Reactivity Tests, In Vivo* 〈88〉 are performed.

As required for elastomeric closures, elastomeric materials that do not meet the in vitro requirements may qualify as biocompatible materials and may be used in the construction of medical devices if they meet the requirements of the *Systemic Injection Test* and the *Intracutaneous Test* under *Biological Reactivity Tests, In Vivo* 〈88〉. As required for drug containers, plastics and other polymers that do not meet the in vitro testing requirements are not suitable materials for use in medical devices.

IN VITRO TESTING, IN VIVO TESTING, AND CLASS DESIGNATION FOR PLASTICS AND OTHER POLYMERS

The testing requirements specified under *Biological Reactivity Tests, In Vitro* 〈87〉 and *Biological Reactivity Tests, In Vivo* 〈88〉 are designed to determine the biological reactivity of mammalian cell cultures and the biological response of animals to elastomeric, plastic, and other polymer materials with direct or indirect patient contact. The biological reactivity of these materials may depend on both their surface characteristics and their extractable chemical components. The testing procedures set forth in these chapters can often be performed with the material or an extract of the material under test, unless otherwise specified.

Preparation of Extracts

Evaluation of the biocompatibility of a whole medical product is often not realistic; thus, the use of representative portions or extracts of selected materials may be the only practical alternative for performing the assays. When representative portions of the materials or extracts of the materials under test are used, it is important to consider that raw materials may undergo chemical changes during the manufacturing, processing, and sterilization of a medical product. Although in vitro testing of raw materials can serve as an important screening procedure, a final evaluation of the biocompatibility of a medical product is performed with portions of the finished and sterilized product.

The preparation of extracts is performed according to the procedures set forth under *Biological Reactivity Tests, In Vitro* ⟨87⟩ and under *Biological Reactivity Tests, In Vivo* ⟨88⟩. Extractions may be performed at various temperatures (121°, 70°, 50°, or 37°), for various time intervals (1 hour, 24 hours, or 72 hours), and in different extraction media. The choice of extraction medium for the procedures under *Biological Reactivity Tests, In Vitro* ⟨87⟩ includes *Sodium Chloride Injection* (0.9% NaCl) or tissue culture medium with or without serum. When medium with serum is used, the extraction temperature cannot exceed 37°. In vivo extraction medium includes the choices described under *Biological Reactivity Tests, In Vivo* ⟨88⟩ or the solvent to which the drug or medical device is exposed.

When choosing extraction conditions, select the temperature, solvent, and time variables that best mimic the "in use" conditions of the product. The performance of multiple tests at various conditions can be used to simulate variations in the "in use" conditions. Although careful selection of extraction conditions allows the simulation of manufacturing and processing conditions in the testing of raw materials, an evaluation of the biocompatibility of the product is performed with the finished and sterilized product.

In Vitro Testing

The procedures described under *Biological Reactivity Tests, In Vitro* ⟨87⟩ include an *Agar Diffusion Test* (indirect contact test), a *Direct Contact Test*, and an *Elution Test* (extraction test). The sample is biocompatible if the cell cultures do not exhibit greater than a mild reactivity (Grade 2) to the material under test, as described under *Biological Reactivity Tests, In Vitro* ⟨87⟩. The *Agar Diffusion Test* is designed to evaluate the biocompatibility of elastomeric materials. The material is placed on the agar overlay of the cell monolayer, which cushions the cells from physical damage by the material and allows leachable chemicals or materials to diffuse from the elastomer and contact the cell monolayer. Extracts of elastomeric materials are tested by placing the filter paper saturated with an extract of the elastomer on the solidified surface of the agar. The *Direct Contact Test* is designed for elastomeric or plastic materials that will not physically damage cells with which they are in direct contact. Any leachable chemicals diffuse from the material into the serum-supplemented growth medium and directly contact the cell monolayer. The *Elution Test* is designed to evaluate the extracts of polymeric materials. The material may be applied directly to the tissue culture media.

The performance of either the *Agar Diffusion Test* or the *Direct Contact Test* in combination with the *Elution Test* is the preferred testing protocol. Extraction of the product or materials for the *Agar Diffusion Test* or the *Elution Test* is performed as described in the *Preparation of Extracts.*

In Vivo Testing and Class Designation

According to the injection and implantation requirements specified in *Table 1* under *Biological Reactivity Tests, In Vivo* ⟨88⟩, plastics and other polymers are assigned a class designation between class I and class VI. To obtain a plastic or other polymer class designation, extracts of the test material are produced according to the specified procedures in various media.

To evaluate biocompatibility, the extracts are injected systemically and intracutaneously into mice and rabbits or guinea pigs. According to the specified injection requirements, a plastic or other polymer may initially be graded as class I, II, III, or V. If in addition to injection testing, implantation testing using the material itself is performed, the plastic or other polymer may be classified as class IV or class VI.

BIOCOMPATIBILITY OF MEDICAL DEVICES AND IMPLANTS

In addition to evaluating medical products for compendial purposes according to the procedures specified under ⟨1⟩, *Sterility Tests* ⟨71⟩, *Biological Reactivity Tests, In Vitro* ⟨87⟩, *Biological Reactivity Tests, In Vivo* ⟨88⟩, *Transfusion and Infusion Assemblies and Similar Medical Devices* ⟨161⟩, *Elastomeric Closures for Injections* ⟨381⟩, *Plastic Packaging Systems and Their Materials of Construction* ⟨661⟩, *Plastic Materials of Construction* ⟨661.1⟩, and *Plastic Packaging Systems for Pharmaceutical Use* ⟨661.2⟩, medical devices and implants are evaluated for sensitization, subchronic toxicity, genotoxicity, hemocompatibility, chronic toxicity, carcinogenicity, reproductive or developmental toxicity, and biodegradation as required by the regulatory agencies.

The guidance provided by the regulatory agencies indicates that the extent of testing that is performed for a medical device or an implant depends on the following factors: (1) the similarity and uniqueness of the product relative to previously marketed ("predicate") products as considered in the *Decision Flowchart*; (2) the extent and duration of the contact between the

product and the patient as described in the *Categorization of Medical Devices*; and (3) the material composition of the product as considered in the sections *Decision Flowchart* and *In Vivo Testing and Class Designation*.

Decision Flowchart

Guidance on comparing a medical device or an implant to previously marketed products is provided by the Biocompatibility Decision Flowchart (see *Figure 1*[3]) as adapted from the FDA's Blue Book Memorandum #G95-1. The purpose of the flowchart is to determine whether the available data from previously marketed devices are sufficient to ensure the safety of the device under consideration. As indicated by the flowchart, the material composition and the manufacturing techniques of a product are compared to those of the previously marketed products for the devices that come in direct contact with the body. In addition, the flowchart requires an evaluation of the toxicity of any unique material that has not been used in predicate devices. Responses to the questions posed in the flowchart lead to the conclusion that either the available data are sufficient or additional testing is required to ensure the safety of the product. When additional testing is required, guidance on the identification of appropriate testing procedures is provided in the section *Test Selection Matrix*.

[3] Adapted from the FDA Blue Book Memorandum #G95-1 ("Use of International Standard ISO-10993. 'Biological Evaluation of Medical Devices-Part 1: Evaluation and Testing.'")

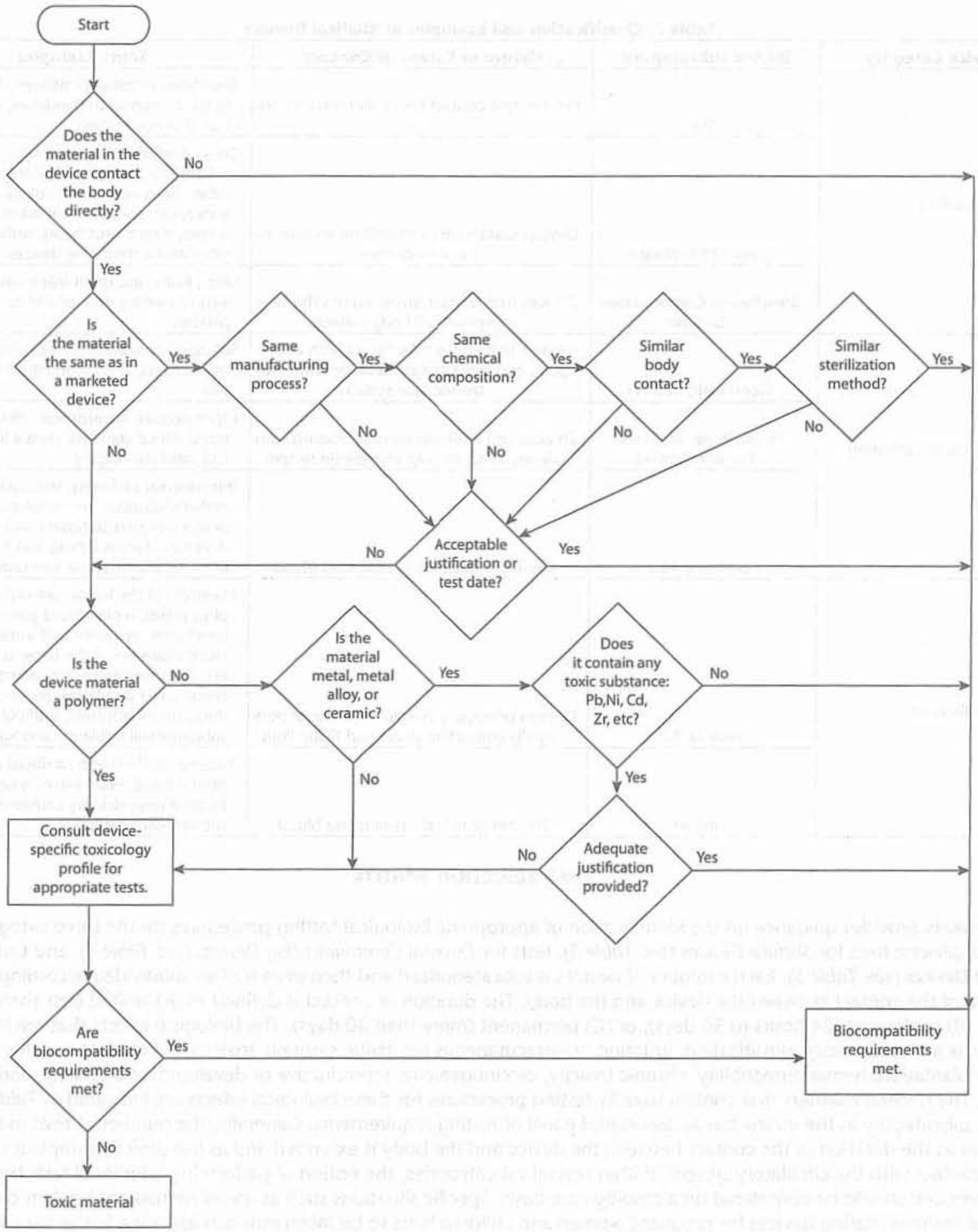

Figure 1. Biocompatibility flowchart.

Categorization of Medical Devices

To facilitate the identification of appropriate testing procedures, medical devices are divided and subdivided, as shown in *Table 2*, according to the nature and extent of their contact with the body. Major categories of medical devices are surface devices, external communicating devices, and implant devices. These are then further subcategorized. Some examples of medical devices and implants belonging to each of the subcategories are also presented in *Table 2*.

General Chapters

Table 2. Classification and Examples of Medical Devices

Device Category	Device Subcategory	Nature or Extent of Contact	Some Examples
Surface Devices	Skin	Devices that contact intact skin surfaces only	Electrodes, external prostheses, fixation tapes, compression bandages, and monitors of various types
	Mucosal Membrane	Devices communicating with intact mucosal membranes	Contact lenses, urinary catheters, intravaginal and intraintestinal devices (stomach tubes, sigmoidoscopes, colonoscopes, gastroscopes), endotracheal tubes, bronchoscopes, dental prostheses, orthodontic devices, and intrauterine devices
	Breached or Compromised Surfaces	Devices that contact breached or otherwise compromised body surfaces	Ulcer, burn, and granulation tissue dressings or healing devices and occlusive patches
External Communicating Devices	Blood Path, Indirect	Devices that contact the blood path at one point and serve as a conduit for entry into the vascular system	Solution administration sets, extension sets, transfer sets, and blood administration sets
	Tissue, Bone, or Dentin Communicating	Devices and materials communicating with tissue, bone, or pulp and dentin system	Laparoscopes, arthroscopes, draining systems, dental cements, dental filling materials, and skin staples
	Circulating blood	Devices that contact circulating blood	Intravascular catheters, temporary pacemaker electrodes, oxygenators, extracorporeal oxygenator tubing and accessories, dialyzers, dialysis tubing and accessories, hemoadsorbents, and immunoadsorbents
Implant Devices	Tissue or Bone	Devices principally contacting bone or principally contacting tissue and tissue fluid	Examples of the former are orthopedic pins, plates, replacement joints, bone prostheses, cements, and intraosseous devices; examples of the latter are pacemakers, drug supply devices, neuromuscular sensors and simulators, replacement tendons, breast implants, artificial larynxes, subperiosteal implants, and ligation clips
	Blood	Devices principally contacting blood	Pacemaker electrodes, artificial arteriovenous fistulae, heart valves, vascular grafts, internal drug delivery catheters, and ventricular-assist devices

Test Selection Matrix

The matrix provides guidance on the identification of appropriate biological testing procedures for the three categories of medical devices: tests for *Surface Devices* (see *Table 3*), tests for *External Communicating Devices* (see *Table 4*), and tests for *Implant Devices* (see *Table 5*). Each category of devices is subcategorized and then even further subdivided according to the duration of the contact between the device and the body. The duration of contact is defined as (A) limited (less than 24 hours); (B) prolonged (24 hours to 30 days); or (C) permanent (more than 30 days). The biological effects that are included in the matrix are cytotoxicity, sensitization, irritation or intracutaneous reactivity, systemic toxicity, subchronic toxicity, genotoxicity, implantation, hemocompatibility, chronic toxicity, carcinogenicity, reproductive or developmental toxicity, and biodegradation. The general chapters that contain toxicity testing procedures for these biological effects are indicated in *Table 1*.

Each subcategory in the matrix has an associated panel of testing requirements. Generally, the number of tests in the panel increases as the duration of the contact between the device and the body is extended and as the device or implant comes in closer contact with the circulatory system. Within several subcategories, the option of performing additional tests beyond those required should be considered on a case-by-case basis. Specific situations such as use of permanent implant devices or external communicating devices for pregnant women and children have to be taken into consideration in the manufacturer's decision to include reproductive or developmental testing. Guidance on the identification of possible additional testing procedures is provided in the matrix for each subcategory of medical devices.

GUIDANCE IN SELECTING THE PLASTIC OR OTHER POLYMER CLASS DESIGNATION FOR A MEDICAL DEVICE

To provide guidance on selecting the appropriate plastic or other polymer class designation for a medical device, each subcategory of *Surface Devices* (see *Figure 2*)

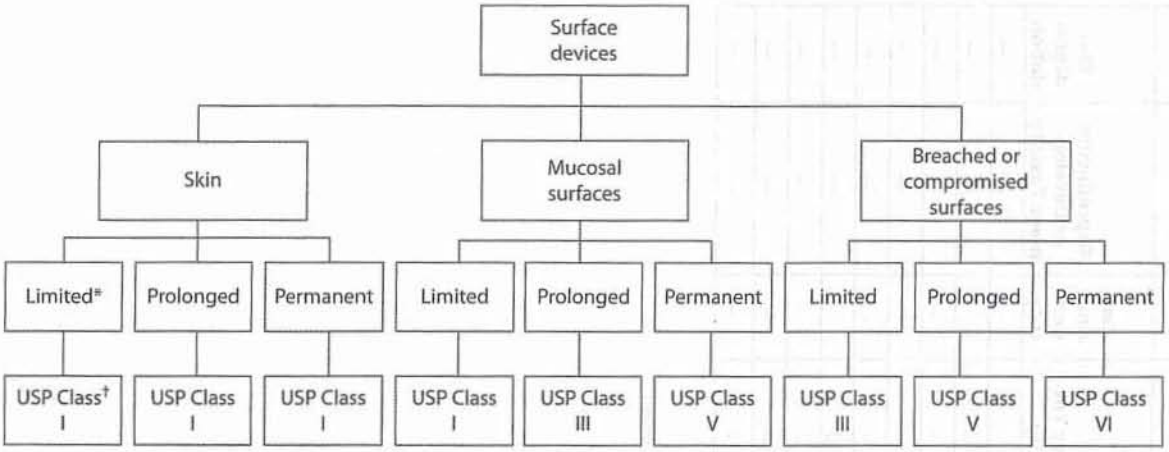

Figure 2. USP plastic and other polymer class requirements for surface devices.* Categorization based on duration of contact: limited—less than 24 hours; prolonged—24 hours to 30 days; permanent—more than 30 days. † USP Plastic Class designation.

and *External Communicating Devices* (see *Figure 3*)

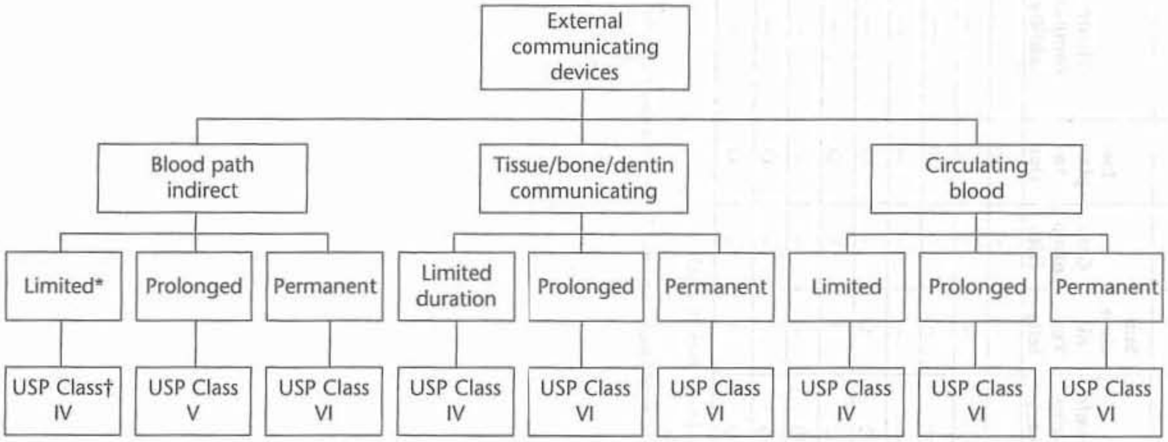

Figure 3. USP plastic and other polymer class requirements for external communicating devices. * Categorization based on duration of contact: limited—less than 24 hours; prolonged—24 hours to 30 days; permanent—more than 30 days.† USP Plastic Class designation.

is assigned a USP Plastic Class designation (see *Biological Reactivity Tests, In Vivo* 〈88〉). If the tests for each USP class designation are not sufficient for a specific device, the manufacturer or the practitioner must develop an appropriate set of tests. The indicated numerical class number increases relative to the duration (risk) of contact between the device and the body. In the category of *Implant Devices,* the exclusive use of class VI is mandatory. The assignment of USP Plastic Class designation is based on the test selection matrices illustrated in *Tables 3*, *4*, and *5*.

The assignment of a plastic or other polymer class designation to a subcategory is not intended to restrict the use of higher classes of plastics or other polymers. Although the assigned class defines the lowest numerical class of plastic or other polymer that may be used in the corresponding device, the use of a numerically higher class of plastic is optional. When a device can be defined as belonging to more than one device category, the plastic or other polymer should meet the requirements of the highest numerical class.

Table 3. Test Selection Matrix for Surface Devices*

Device Categories			Biological Effect[b]											
Body Contact		Contact Duration[a]	Cytotoxicity	Sensitization	Irritation or Intracutaneous Reactivity	Systemic Toxicity (Acute)	Subchronic Toxicity	Genotoxicity	Implantation	Hemocompatability	Chronic Toxicity	Carcinogenicity	Reproductive or Development Toxicity	Biodegradation
Surface Devices	Skin	A	X	X	X	—	—	—	—	—	—	—	—	—
		B	X	X	X	—	—	—	—	—	—	—	—	—
		C	X	X	X	—	—	—	—	—	—	—	—	—
	Mucosal Membrane	A	X	X	X	—	—	—	—	—	—	—	—	—
		B	X	X	X	O	O	—	O	—	—	—	—	—
		C	X	X	X	O	X	X	O	—	O	—	—	—
	Breached or Compromised Surfaces	A	X	X	X	O	—	—	—	—	—	—	—	—
		B	X	X	X	O	O	—	O	—	—	—	—	—
		C	X	X	X	O	X	X	O	—	O	—	—	—

[a] Legend A—limited (less than 24 hours); B—prolonged (24 hours to 30 days); C—permanent (more than 30 days).

[b] Legend X—ISO evaluation tests for consideration; O—additional tests that may be applicable.

* Adapted from the FDA's Blue Book Memorandum #G95-1 (*Table 1. Initial Evaluation Tests for Consideration* and *Table 2. Supplementary Evaluation Tests for Consideration*).

Table 4. Test Selection Matrix for External Communicating Devices*

Device Categories			Biological Effect[b]												
Body Contact		Contact Duration[a]	Cytotoxicity	Sensitization	Irritation or Intracutaneous Reactivity	Systemic Toxicity (Acute)	Subchronic Toxicity	Genotoxicity	Implantation	Hemocompatibility	Chronic Toxicity	Carcinogenicity	Reproductive or Development Toxicity	Biodegradation
External Communicating Devices	Blood Path, Indirect	A	X	X	X	X	—	—	—	X	—	—	—	—
		B	X	X	X	X	O	—	—	X	—	—	—	—
		C	X	X	O	X	X	X	O	X	X	X	—	—
	Tissue, Bone, or Dentin Communicating	A	X	X	X	O	—	—	—	—	—	—	—	—
		B	X	X	O	O	O	X	X	—	—	—	—	—
		C	X	X	O	O	O	X	X	—	X	X	—	—
	Circulating Blood	A	X	X	X	X	—	O	—	X	—	—	—	—
		B	X	X	X	X	O	X	O	X	—	—	—	—
		C	X	X	X	X	X	X	O	X	X	X	—	—

[a] Legend A—limited (less than 24 hours); B—prolonged (24 hours to 30 days); C—permanent (more than 30 days).
[b] Legend X—ISO evaluation tests for consideration; O—additional tests that may be applicable.
* Adapted from the FDA's Blue Book Memorandum #G95-1 (*Table 1. Initial Evaluation Tests for Consideration* and *Table 2. Supplementary Evaluation Tests for Consideration*).

Table 5. Test Selection Matrix for Implant Devices*

Device Categories			Biological Effect[b]											
Body Contact		Contact Duration[a]	Cytotoxicity	Sensitization	Irritation or Intracutaneous Reactivity	Systemic Toxicity (Acute)	Subchronic Toxicity	Genotoxicity	Implantation	Hemocompatibility	Chronic Toxicity	Carcinogenicity	Reproductive or Development Toxicity	Biodegradation
Implant Devices	Tissue or Bone	A	X	X	X	O	—	—	—	—	—	—	—	—
		B	X	X	O	O	O	X	X	—	—	—	—	—
		C	X	X	O	O	O	X	X	—	X	X	—	—
	Blood	A	X	X	X	X	—	—	X	X	—	—	—	—
		B	X	X	X	X	O	X	X	X	—	—	—	—
		C	X	X	X	X	X	X	X	X	X	X	—	—

[a] Legend A—limited (less than 24 hours); B—prolonged (24 hours to 30 days); C—permanent (more than 30 days).

[b] Legend X—ISO evaluation tests for consideration; O—additional tests that may be applicable.

* Adapted from the FDA's Blue Book Memorandum #G95-1 (*Table 1. Initial Evaluation Tests for Consideration* and *Table 2. Supplementary Evaluation Tests for Consideration*).